RM0394
Reference manual

STM32L431xx STM32L433xx STM32L443xx advanced ARM®-based 32-bit MCUs

Introduction

This reference manual targets application developers. It provides complete information on how to use the STM32L431/433/443 microcontroller memory and peripherals.

The STM32L431/433/443 is a family of microcontrollers with different memory sizes, packages and peripherals.

For ordering information, mechanical and electrical device characteristics please refer to the corresponding datasheets.

For information on the ARM® Cortex®-M4 core, please refer to the Cortex®-M4 *Technical Reference Manual*.

Related documents

- Cortex®-M4 Technical Reference Manual, available from: http://infocenter.arm.com
- STM32L431xx, STM32L433xx and STM32L443xx datasheets
- Cortex®-M4 programming manual (PM0214)

Contents

1 Documentation conventions 55

1.1 List of abbreviations for registers 55

1.2 Glossary 55

1.3 Peripheral availability 55

1.4 Product specific features 56

2 System and memory overview 57

2.1 System architecture 57

2.1.1 S0: I-bus 58

2.1.2 S1: D-bus 58

2.1.3 S2: S-bus 59

2.1.4 S3, S4: DMA-bus 59

2.1.5 BusMatrix 59

2.2 Memory organization 60

2.2.1 Introduction 60

2.2.2 Memory map and register boundary addresses 62

2.3 Bit banding 65

2.4 Embedded SRAM 66

2.4.1 SRAM2 Parity check 66

2.4.2 SRAM2 Write protection 67

2.4.3 SRAM2 Read protection 67

2.4.4 SRAM2 Erase 68

2.5 Flash memory overview 68

2.6 Boot configuration 68

3 Embedded Flash memory (FLASH) 71

3.1 Introduction 71

3.2 FLASH main features 71

3.3 FLASH functional description 71

3.3.1 Flash memory organization 71

3.3.2 Error code correction (ECC) 73

3.3.3 Read access latency 73

3.3.4 Adaptive real-time memory accelerator (ART Accelerator™) 74

3.3.5 Flash program and erase operations 77
3.3.6 Flash main memory erase sequences **78**
3.3.7 Flash main memory programming sequences 79
3.4 FLASH option bytes 83
3.4.1 Option bytes description 83
3.4.2 Option bytes programming 87
3.5 FLASH memory protection 89
3.5.1 Read protection (RDP) 89
3.5.2 Proprietary code readout protection (PCROP) 92
3.5.3 Write protection (WRP) 93
3.6 FLASH interrupts 94
3.7 FLASH registers 95
3.7.1 Flash access control register (FLASH_ACR) 95
3.7.2 Flash Power-down key register (FLASH_PDKEYR) 96
3.7.3 Flash key register (FLASH_KEYR) 97
3.7.4 Flash option key register (FLASH_OPTKEYR) 97
3.7.5 Flash status register (FLASH_SR) 98
3.7.6 Flash control register (FLASH_CR) 100
3.7.7 Flash ECC register (FLASH_ECCR) 101
3.7.8 Flash option register (FLASH_OPTR) 102
3.7.9 Flash PCROP Start address register (FLASH_PCROP1SR) 104
3.7.10 Flash PCROP End address register (FLASH_PCROP1ER) 104
3.7.11 Flash WRP area A address register (FLASH_WRP1AR) 105
3.7.12 Flash WRP area B address register (FLASH_WRP1BR) 105
3.7.13 FLASH register map 107

4 Firewall (FW) 109
4.1 Introduction 109
4.2 Firewall main features 109
4.3 Firewall functional description 110
4.3.1 Firewall AMBA bus snoop 110
4.3.2 Functional requirements 110
4.3.3 Firewall segments 111
4.3.4 Segment accesses and properties 112
4.3.5 Firewall initialization 113
4.3.6 Firewall states 114

4.4 Firewall registers 116
4.4.1 Code segment start address (FW_CSSA) 116
4.4.2 Code segment length (FW_CSL) 116
4.4.3 Non-volatile data segment start address (FW_NVDSSA) 117
4.4.4 Non-volatile data segment length (FW_NVDSL) 117
4.4.5 Volatile data segment start address (FW_VDSSA) 118
4.4.6 Volatile data segment length (FW_VDSL) 118
4.4.7 Configuration register (FW_CR) 119
4.4.8 Firewall register map 120

5 Power control (PWR) 121
5.1 Power supplies 121
5.1.1 Independent analog peripherals supply 122
5.1.2 Independent USB transceivers supply[(a)] 123
5.1.3 Independent LCD supply 123
5.1.4 Battery backup domain 124
5.1.5 Voltage regulator 125
5.1.6 Dynamic voltage scaling management 126
5.2 Power supply supervisor 126
5.2.1 Power-on reset (POR) / power-down reset (PDR) / brown-out reset (BOR) 126
5.2.2 Programmable voltage detector (PVD) 127
5.2.3 Peripheral Voltage Monitoring (PVM) 128
5.3 Low-power modes 129
5.3.1 Run mode 134
5.3.2 Low-power run mode (LP run) 135
5.3.3 Low power modes 136
5.3.4 Sleep mode 137
5.3.5 Low-power sleep mode (LP sleep) 137
5.3.6 Stop 0 mode 138
5.3.7 Stop 1 mode 141
5.3.8 Stop 2 mode 141
5.3.9 Standby mode 144
5.3.10 Shutdown mode 146
5.3.11 Auto-wakeup from low-power mode 147
5.4 PWR registers 148
5.4.1 Power control register 1 (PWR_CR1) 148

5.4.2 Power control register 2 (PWR_CR2) 149
5.4.3 Power control register 3 (PWR_CR3) 150
5.4.4 Power control register 4 (PWR_CR4) 151
5.4.5 Power status register 1 (PWR_SR1) 152
5.4.6 Power status register 2 (PWR_SR2) 153
5.4.7 Power status clear register (PWR_SCR) 154
5.4.8 Power Port A pull-up control register (PWR_PUCRA) 155
5.4.9 Power Port A pull-down control register (PWR_PDCRA) 156
5.4.10 Power Port B pull-up control register (PWR_PUCRB) 156
5.4.11 Power Port B pull-down control register (PWR_PDCRB) 157
5.4.12 Power Port C pull-up control register (PWR_PUCRC) 157
5.4.13 Power Port C pull-down control register (PWR_PDCRC) 158
5.4.14 Power Port D pull-up control register (PWR_PUCRD) 158
5.4.15 Power Port D pull-down control register (PWR_PDCRD) 159
5.4.16 Power Port E pull-up control register (PWR_PUCRE) 159
5.4.17 Power Port E pull-down control register (PWR_PDCRE) 160
5.4.18 Power Port H pull-up control register (PWR_PUCRH) 160
5.4.19 Power Port H pull-down control register (PWR_PDCRH) 161
5.4.20 PWR register map and reset value table 162

6 Reset and clock control (RCC) 164

6.1 Reset 164
6.1.1 Power reset 164
6.1.2 System reset 164
6.1.3 Backup domain reset 165
6.2 Clocks 166
6.2.1 HSE clock 170
6.2.2 HSI16 clock 171
6.2.3 MSI clock 172
6.2.4 HSI48 clock 173
6.2.5 PLL 173
6.2.6 LSE clock 174
6.2.7 LSI clock 174
6.2.8 System clock (SYSCLK) selection 175
6.2.9 Clock source frequency versus voltage scaling 175
6.2.10 Clock security system (CSS) 175
6.2.11 Clock security system on LSE 176

6.2.12 ADC clock 176
6.2.13 RTC clock 176
6.2.14 Timer clock 177
6.2.15 Watchdog clock 177
6.2.16 Clock-out capability 178
6.2.17 Internal/external clock measurement with TIM15/TIM16 178
6.2.18 Peripheral clock enable register (RCC_AHBxENR, RCC_APBxENRy) 180
6.3 Low-power modes 180
6.4 RCC registers 182
6.4.1 Clock control register (RCC_CR) 182
6.4.2 Internal clock sources calibration register (RCC_ICSCR) 185
6.4.3 Clock configuration register (RCC_CFGR) 185
6.4.4 PLL configuration register (RCC_PLLCFGR) 187
6.4.5 PLLSAI1 configuration register (RCC_PLLSAI1CFGR) 190
6.4.6 Clock interrupt enable register (RCC_CIER) 193
6.4.7 Clock interrupt flag register (RCC_CIFR) 195
6.4.8 Clock interrupt clear register (RCC_CICR) 196
6.4.9 AHB1 peripheral reset register (RCC_AHB1RSTR) 197
6.4.10 AHB2 peripheral reset register (RCC_AHB2RSTR) 198
6.4.11 AHB3 peripheral reset register (RCC_AHB3RSTR) 200
6.4.12 APB1 peripheral reset register 1 (RCC_APB1RSTR1) 200
6.4.13 APB1 peripheral reset register 2 (RCC_APB1RSTR2) 203
6.4.14 APB2 peripheral reset register (RCC_APB2RSTR) 203
6.4.15 AHB1 peripheral clock enable register (RCC_AHB1ENR) 205
6.4.16 AHB2 peripheral clock enable register (RCC_AHB2ENR) 206
6.4.17 AHB3 peripheral clock enable register(RCC_AHB3ENR) 207
6.4.18 APB1 peripheral clock enable register 1 (RCC_APB1ENR1) 208
6.4.19 APB1 peripheral clock enable register 2 (RCC_APB1ENR2) 210
6.4.20 APB2 peripheral clock enable register (RCC_APB2ENR) 212
6.4.21 AHB1 peripheral clocks enable in Sleep and Stop modes register (RCC_AHB1SMENR) 213
6.4.22 AHB2 peripheral clocks enable in Sleep and Stop modes register (RCC_AHB2SMENR) 214
6.4.23 AHB3 peripheral clocks enable in Sleep and Stop modes register (RCC_AHB3SMENR) 215
6.4.24 APB1 peripheral clocks enable in Sleep and Stop modes register 1 (RCC_APB1SMENR1) 216

6.4.25 APB1 peripheral clocks enable in Sleep and Stop modes register 2 (RCC_APB1SMENR2) . . . 218
6.4.26 APB2 peripheral clocks enable in Sleep and Stop modes register (RCC_APB2SMENR) . . . 220
6.4.27 Peripherals independent clock configuration register (RCC_CCIPR) . 221
6.4.28 Backup domain control register (RCC_BDCR) . . . 223
6.4.29 Control/status register (RCC_CSR) . . . 225
6.4.30 Clock recovery RC register (RCC_CRRCR) . . . 227
6.4.31 RCC register map . . . 228

7 Clock recovery system (CRS) . . . 233
7.1 Introduction . . . 233
7.2 CRS main features . . . 233
7.3 CRS functional description . . . 234
7.3.1 CRS block diagram . . . 234
7.3.2 Synchronization input . . . 234
7.3.3 Frequency error measurement . . . 235
7.3.4 Frequency error evaluation and automatic trimming . . . 236
7.3.5 CRS initialization and configuration . . . 236
7.4 CRS low-power modes . . . 237
7.5 CRS interrupts . . . 238
7.6 CRS registers . . . 238
7.6.1 CRS control register (CRS_CR) . . . 238
7.6.2 CRS configuration register (CRS_CFGR) . . . 239
7.6.3 CRS interrupt and status register (CRS_ISR) . . . 240
7.6.4 CRS interrupt flag clear register (CRS_ICR) . . . 242
7.6.5 CRS register map . . . 243

8 General-purpose I/Os (GPIO) . . . 244
8.1 Introduction . . . 244
8.2 GPIO main features . . . 244
8.3 GPIO functional description . . . 244
8.3.1 General-purpose I/O (GPIO) . . . 247
8.3.2 I/O pin alternate function multiplexer and mapping . . . 247
8.3.3 I/O port control registers . . . 248
8.3.4 I/O port data registers . . . 248
8.3.5 I/O data bitwise handling . . . 248

8.3.6 GPIO locking mechanism 249
8.3.7 I/O alternate function input/output 249
8.3.8 External interrupt/wakeup lines 249
8.3.9 Input configuration 249
8.3.10 Output configuration 250
8.3.11 Alternate function configuration 251
8.3.12 Analog configuration 252
8.3.13 Using the HSE or LSE oscillator pins as GPIOs 253
8.3.14 Using the GPIO pins in the RTC supply domain 253
8.3.15 Using PH3 as GPIO 253
8.4 GPIO registers 254
8.4.1 GPIO port mode register (GPIOx_MODER) (x =A..E and H) 254
8.4.2 GPIO port output type register (GPIOx_OTYPER) (x = A..E and H) . . 254
8.4.3 GPIO port output speed register (GPIOx_OSPEEDR) (x = A..E and H) 255
8.4.4 GPIO port pull-up/pull-down register (GPIOx_PUPDR) (x = A..E and H) 255
8.4.5 GPIO port input data register (GPIOx_IDR) (x = A..E and H) 256
8.4.6 GPIO port output data register (GPIOx_ODR) (x = A..E and H) 256
8.4.7 GPIO port bit set/reset register (GPIOx_BSRR) (x = A..E and H) 256
8.4.8 GPIO port configuration lock register (GPIOx_LCKR) (x = A..E and H) 257
8.4.9 GPIO alternate function low register (GPIOx_AFRL) (x = A..E and H) 258
8.4.10 GPIO alternate function high register (GPIOx_AFRH) (x = A..E and H) 259
8.4.11 GPIO port bit reset register (GPIOx_BRR) (x =A..E and H) 259
8.4.12 GPIO register map 260

9 System configuration controller (SYSCFG) 262
9.1 SYSCFG main features 262
9.2 SYSCFG registers 262
9.2.1 SYSCFG memory remap register (SYSCFG_MEMRMP) 262
9.2.2 SYSCFG configuration register 1 (SYSCFG_CFGR1) 263
9.2.3 SYSCFG external interrupt configuration register 1 (SYSCFG_EXTICR1) 264
9.2.4 SYSCFG external interrupt configuration register 2 (SYSCFG_EXTICR2) 266

9.2.5 SYSCFG external interrupt configuration register 3 (SYSCFG_EXTICR3) 267
9.2.6 SYSCFG external interrupt configuration register 4 (SYSCFG_EXTICR4) 269
9.2.7 SYSCFG SRAM2 control and status register (SYSCFG_SCSR) 270
9.2.8 SYSCFG configuration register 2 (SYSCFG_CFGR2) 271
9.2.9 SYSCFG SRAM2 write protection register (SYSCFG_SWPR) 272
9.2.10 SYSCFG SRAM2 key register (SYSCFG_SKR) 272
9.2.11 SYSCFG register map 273

10 Peripherals interconnect matrix 274

10.1 Introduction 274
10.2 Connection summary 274
10.3 Interconnection details 275
10.3.1 From timer (TIM1/TIM2/TIM15/TIM16) to timer (TIM1/TIM2/TIM15/TIM16) 275
10.3.2 From timer (TIM1/TIM2/TIM6/TIM15) and EXTI to ADC (ADC1) 276
10.3.3 From ADC (ADC1) to timer (TIM1) 276
10.3.4 From timer (TIM2/TIM6/TIM7) and EXTI to DAC (DAC1/DAC2) 277
10.3.5 From HSE, LSE, LSI, MSI, MCO, RTC to timer (TIM2/TIM15/TIM16) 277
10.3.6 From RTC, COMP1, COMP2 to low-power timer (LPTIM1/LPTIM2) . . 277
10.3.7 From timer (TIM1/TIM2/TIM15) to comparators (COMP1/COMP2) 278
10.3.8 From USB to timer (TIM2) 278
10.3.9 From internal analog source to ADC (ADC1) and OPAMP (OPAMP1) 279
10.3.10 From comparators (COMP1/COMP2) to timers (TIM1/TIM2/TIM15/TIM16) 279
10.3.11 From system errors to timers (TIM1/TIM15/TIM16) 280
10.3.12 From timers (TIM16) to IRTIM 280

11 Direct memory access controller (DMA) 281

11.1 Introduction 281
11.2 DMA main features 281
11.3 DMA implementation 281
11.4 DMA functional description 282

11.4.1 DMA transactions 282
11.4.2 Arbiter 283
11.4.3 DMA channels 283
11.4.4 Programmable data width, data alignment and endians 285
11.4.5 Error management 286
11.4.6 DMA interrupts 286
11.4.7 DMA request mapping 287
11.5 DMA registers 291
11.5.1 DMA interrupt status register (DMA_ISR) 291
11.5.2 DMA interrupt flag clear register (DMA_IFCR) 292
11.5.3 DMA channel x configuration register (DMA_CCRx) (x = 1..7 , where x = channel number) 293
11.5.4 DMA channel x number of data register (DMA_CNDTRx) (x = 1..7, where x = channel number) 295
11.5.5 DMA channel x peripheral address register (DMA_CPARx) (x = 1..7, where x = channel number) 295
11.5.6 DMA channel x memory address register (DMA_CMARx) (x = 1..7, where x = channel number) 296
11.5.7 DMA1 channel selection register (DMA1_CSELR) 297
11.5.8 DMA2 channel selection register (DMA2_CSELR) 299
11.5.9 DMA register map 301

12 Nested vectored interrupt controller (NVIC) 304
12.1 NVIC main features 304
12.2 SysTick calibration value register 304
12.3 Interrupt and exception vectors 305

13 Extended interrupts and events controller (EXTI) 309
13.1 Introduction 309
13.2 EXTI main features 309
13.3 EXTI functional description 309
13.3.1 EXTI block diagram 310
13.3.2 Wakeup event management 310
13.3.3 Peripherals asynchronous Interrupts 311
13.3.4 Hardware interrupt selection 311
13.3.5 Hardware event selection 311
13.3.6 Software interrupt/event selection 311

13.4 EXTI interrupt/event line mapping 311
13.5 EXTI registers 314
13.5.1 Interrupt mask register 1 (EXTI_IMR1) 314
13.5.2 Event mask register 1 (EXTI_EMR1) 314
13.5.3 Rising trigger selection register 1 (EXTI_RTSR1) 315
13.5.4 Falling trigger selection register 1 (EXTI_FTSR1) 315
13.5.5 Software interrupt event register 1 (EXTI_SWIER1) 316
13.5.6 Pending register 1 (EXTI_PR1) 317
13.5.7 Interrupt mask register 2 (EXTI_IMR2) 317
13.5.8 Event mask register 2 (EXTI_EMR2) 318
13.5.9 Rising trigger selection register 2 (EXTI_RTSR2) 318
13.5.10 Falling trigger selection register 2 (EXTI_FTSR2) 319
13.5.11 Software interrupt event register 2 (EXTI_SWIER2) 319
13.5.12 Pending register 2 (EXTI_PR2) 320
13.5.13 EXTI register map 320

14 Cyclic redundancy check calculation unit (CRC) 322
14.1 Introduction 322
14.2 CRC main features 322
14.3 CRC functional description 323
14.3.1 CRC block diagram 323
14.3.2 CRC internal signals 323
14.3.3 CRC operation 323
14.4 CRC registers 324
14.4.1 Data register (CRC_DR) 324
14.4.2 Independent data register (CRC_IDR) 325
14.4.3 Control register (CRC_CR) 325
14.4.4 Initial CRC value (CRC_INIT) 326
14.4.5 CRC polynomial (CRC_POL) 326
14.4.6 CRC register map 327

15 Quad-SPI interface (QUADSPI) 328
15.1 Introduction 328
15.2 QUADSPI main features 328
15.3 QUADSPI functional description 328
15.3.1 QUADSPI block diagram 328

15.3.2 QUADSPI Command sequence 329
15.3.3 QUADSPI signal interface protocol modes 332
15.3.4 QUADSPI indirect mode 334
15.3.5 QUADSPI status flag polling mode 335
15.3.6 QUADSPI memory-mapped mode 336
15.3.7 QUADSPI Flash memory configuration 337
15.3.8 QUADSPI delayed data sampling 337
15.3.9 QUADSPI configuration 337
15.3.10 QUADSPI usage 338
15.3.11 Sending the instruction only once 340
15.3.12 QUADSPI error management 340
15.3.13 QUADSPI busy bit and abort functionality 340
15.3.14 nCS behavior 341
15.4 QUADSPI interrupts 342
15.5 QUADSPI registers 343
15.5.1 QUADSPI control register (QUADSPI_CR) 343
15.5.2 QUADSPI device configuration register (QUADSPI_DCR) 346
15.5.3 QUADSPI status register (QUADSPI_SR) 347
15.5.4 QUADSPI flag clear register (QUADSPI_FCR) 348
15.5.5 QUADSPI data length register (QUADSPI_DLR) 349
15.5.6 QUADSPI communication configuration register (QUADSPI_CCR) . . 349
15.5.7 QUADSPI address register (QUADSPI_AR) 351
15.5.8 QUADSPI alternate bytes registers (QUADSPI_ABR) 352
15.5.9 QUADSPI data register (QUADSPI_DR) 352
15.5.10 QUADSPI polling status mask register (QUADSPI _PSMKR) 353
15.5.11 QUADSPI polling status match register (QUADSPI _PSMAR) 353
15.5.12 QUADSPI polling interval register (QUADSPI _PIR) 354
15.5.13 QUADSPI low-power timeout register (QUADSPI_LPTR) 354
15.5.14 QUADSPI register map 356

16 Analog-to-digital converters (ADC) 357
16.1 Introduction 357
16.2 ADC main features 358
16.3 ADC implementation 359
16.4 ADC functional description 360
16.4.1 ADC block diagram 360

16.4.2 Pins and internal signals 361
16.4.3 Clocks 362
16.4.4 ADC1/2 connectivity 364
16.4.5 Slave AHB interface 367
16.4.6 ADC Deep-Power-Down Mode (DEEPPWD) & ADC Voltage Regulator (ADVREGEN) 367
16.4.7 Single-ended and differential input channels 367
16.4.8 Calibration (ADCAL, ADCALDIF, ADCx_CALFACT) 368
16.4.9 ADC on-off control (ADEN, ADDIS, ADRDY) 371
16.4.10 Constraints when writing the ADC control bits 372
16.4.11 Channel selection (SQRx, JSQRx) 373
16.4.12 Channel-wise programmable sampling time (SMPR1, SMPR2) 373
16.4.13 Single conversion mode (CONT=0) 374
16.4.14 Continuous conversion mode (CONT=1) 375
16.4.15 Starting conversions (ADSTART, JADSTART) 376
16.4.16 Timing 376
16.4.17 Stopping an ongoing conversion (ADSTP, JADSTP) 377
16.4.18 Conversion on external trigger and trigger polarity (EXTSEL, EXTEN, JEXTSEL, JEXTEN) 379
16.4.19 Injected channel management 382
16.4.20 Discontinuous mode (DISCEN, DISCNUM, JDISCEN) 384
16.4.21 Queue of context for injected conversions 385
16.4.22 Programmable resolution (RES) - fast conversion mode 392
16.4.23 End of conversion, end of sampling phase (EOC, JEOC, EOSMP) . . 392
16.4.24 End of conversion sequence (EOS, JEOS) 392
16.4.25 Timing diagrams example (single/continuous modes, hardware/software triggers) 393
16.4.26 Data management 394
16.4.27 Dynamic low-power features 400
16.4.28 Analog window watchdog (AWD1EN, JAWD1EN, AWD1SGL, AWD1CH, AWD2CH, AWD3CH, AWD_HTx, AWD_LTx, AWDx) 405
16.4.29 Oversampler 409
16.4.30 Dual ADC modes (on devices with 2 ADCs) 415
16.4.31 Temperature sensor 429
16.4.32 VBAT supply monitoring 431
16.4.33 Monitoring the internal voltage reference 433
16.5 ADC interrupts 434
16.6 ADC registers (for each ADC) 435

16.6.1 ADC interrupt and status register (ADCx_ISR) 435
16.6.2 ADC interrupt enable register (ADCx_IER) 437
16.6.3 ADC control register (ADCx_CR) 439
16.6.4 ADC configuration register (ADCx_CFGR) 442
16.6.5 ADC configuration register 2 (ADCx_CFGR2) 446
16.6.6 ADC sample time register 1 (ADCx_SMPR1) 447
16.6.7 ADC sample time register 2 (ADCx_SMPR2) 448
16.6.8 ADC watchdog threshold register 1 (ADCx_TR1) 448
16.6.9 ADC watchdog threshold register 2 (ADCx_TR2) 449
16.6.10 ADC watchdog threshold register 3 (ADCx_TR3) 450
16.6.11 ADC regular sequence register 1 (ADCx_SQR1) 450
16.6.12 ADC regular sequence register 2 (ADCx_SQR2) 451
16.6.13 ADC regular sequence register 3 (ADCx_SQR3) 452
16.6.14 ADC regular sequence register 4 (ADCx_SQR4) 454
16.6.15 ADC regular Data Register (ADCx_DR) 454
16.6.16 ADC injected sequence register (ADCx_JSQR) 454
16.6.17 ADC offset register (ADCx_OFRy) (y=1..4) 456
16.6.18 ADC injected data register (ADCx_JDRy, y= 1..4) 457
16.6.19 ADC Analog Watchdog 2 Configuration Register (ADCx_AWD2CR) . 457
16.6.20 ADC Analog Watchdog 3 Configuration Register (ADCx_AWD3CR) . 458
16.6.21 ADC Differential Mode Selection Register (ADCx_DIFSEL) 458
16.6.22 ADC Calibration Factors (ADCx_CALFACT) 459
16.7 ADC common registers 460
16.7.1 ADC Common status register (ADCx_CSR) 460
16.7.2 ADC common control register (ADCx_CCR) 462
16.7.3 ADC common regular data register for dual mode (ADCx_CDR) 465
16.7.4 ADC register map 465

17 Digital-to-analog converter (DAC) 469
17.1 Introduction 469
17.2 DAC main features 469
17.3 DAC functional description 470
17.3.1 DAC block diagram 470
17.3.2 DAC channel enable 471
17.3.3 DAC data format 471
17.3.4 DAC conversion 472
17.3.5 DAC output voltage 473

17.3.6 DAC trigger selection 473
17.3.7 DMA request 473
17.3.8 Noise generation 474
17.3.9 Triangle-wave generation 475
17.3.10 DAC channel modes 475
17.3.11 DAC channel buffer calibration 479
17.3.12 Dual DAC channel conversion 480
17.3.13 Simultaneous trigger with different triangle generation 484
17.4 DAC low-power modes 485
17.5 DAC registers 486
17.5.1 DAC control register (DAC_CR) 486
17.5.2 DAC software trigger register (DAC_SWTRGR) 489
17.5.3 DAC channel1 12-bit right-aligned data holding register (DAC_DHR12R1) 489
17.5.4 DAC channel1 12-bit left aligned data holding register (DAC_DHR12L1) 489
17.5.5 DAC channel1 8-bit right aligned data holding register (DAC_DHR8R1) 490
17.5.6 DAC channel2 12-bit right aligned data holding register (DAC_DHR12R2) 490
17.5.7 DAC channel2 12-bit left aligned data holding register (DAC_DHR12L2) 491
17.5.8 DAC channel2 8-bit right-aligned data holding register (DAC_DHR8R2) 491
17.5.9 Dual DAC 12-bit right-aligned data holding register (DAC_DHR12RD) 491
17.5.10 DUAL DAC 12-bit left aligned data holding register (DAC_DHR12LD) 492
17.5.11 DUAL DAC 8-bit right aligned data holding register (DAC_DHR8RD) 492
17.5.12 DAC channel1 data output register (DAC_DOR1) 493
17.5.13 DAC channel2 data output register (DAC_DOR2) 493
17.5.14 DAC status register (DAC_SR) 493
17.5.15 DAC calibration control register (DAC_CCR) 494
17.5.16 DAC mode control register (DAC_MCR) 495
17.5.17 DAC Sample and Hold sample time register 1 (DAC_SHSR1) 496
17.5.18 DAC Sample and Hold sample time register 2 (DAC_SHSR2) 497
17.5.19 DAC Sample and Hold hold time register (DAC_SHHR) 497
17.5.20 DAC Sample and Hold refresh time register (DAC_SHRR) 498

17.5.21 DAC register map 499

18 Voltage reference buffer (VREFBUF) 501

18.1 Introduction 501

18.2 VREFBUF functional description 501

18.3 VREFBUF registers 501

18.3.1 VREFBUF control and status register (VREFBUF_CSR) 501

18.3.2 VREFBUF calibration control register (VREFBUF_CCR) 502

18.3.3 VREFBUF register map 503

19 Comparator (COMP) 504

19.1 Introduction 504

19.2 COMP main features 504

19.3 COMP functional description 505

19.3.1 COMP block diagram 505

19.3.2 COMP pins and internal signals 505

19.3.3 COMP reset and clocks 507

19.3.4 Comparator LOCK mechanism 507

19.3.5 Window comparator 507

19.3.6 Hysteresis 508

19.3.7 Comparator output blanking function 509

19.3.8 COMP power and speed modes 509

19.4 COMP low-power modes 510

19.5 COMP interrupts 510

19.6 COMP registers 511

19.6.1 Comparator 1 control and status register (COMP1_CSR) 511

19.6.2 Comparator 2 control and status register (COMP2_CSR) 513

19.6.3 COMP register map 516

20 Operational amplifiers (OPAMP) 517

20.1 Introduction 517

20.2 OPAMP main features 517

20.3 OPAMP functional description 517

20.3.1 OPAMP reset and clocks 517

20.3.2 Initial configuration 518

20.3.3 Signal routing 518

20.3.4 OPAMP modes . . . 518
20.3.5 Calibration . . . 522
20.4 OPAMP low-power modes . . . 524
20.5 OPAMP registers . . . 525
20.5.1 OPAMP1 control/status register (OPAMP1_CSR) . . . 525
20.5.2 OPAMP1 offset trimming register in normal mode (OPAMP1_OTR) . . 526
20.5.3 OPAMP1 offset trimming register in low-power mode (OPAMP1_LPOTR) . . . 526
20.5.4 OPAMP register map . . . 527

21 Liquid crystal display controller (LCD) . . . 528
21.1 Introduction . . . 528
21.2 LCD main features . . . 529
21.3 LCD functional description . . . 530
21.3.1 General description . . . 530
21.3.2 Frequency generator . . . 531
21.3.3 Common driver . . . 532
21.3.4 Segment driver . . . 535
21.3.5 Voltage generator and contrast control . . . 539
21.3.6 Double buffer memory . . . 543
21.3.7 COM and SEG multiplexing . . . 543
21.3.8 Flowchart . . . 548
21.4 LCD low-power modes . . . 549
21.5 LCD interrupts . . . 549
21.6 LCD registers . . . 550
21.6.1 LCD control register (LCD_CR) . . . 550
21.6.2 LCD frame control register (LCD_FCR) . . . 551
21.6.3 LCD status register (LCD_SR) . . . 554
21.6.4 LCD clear register (LCD_CLR) . . . 555
21.6.5 LCD display memory (LCD_RAM) . . . 556
21.6.6 LCD register map . . . 556

22 Touch sensing controller (TSC) . . . 559
22.1 Introduction . . . 559
22.2 TSC main features . . . 559
22.3 TSC functional description . . . 560

22.3.1 TSC block diagram 560
22.3.2 Surface charge transfer acquisition overview 560
22.3.3 Reset and clocks 562
22.3.4 Charge transfer acquisition sequence 563
22.3.5 Spread spectrum feature 564
22.3.6 Max count error 564
22.3.7 Sampling capacitor I/O and channel I/O mode selection 565
22.3.8 Acquisition mode 566
22.3.9 I/O hysteresis and analog switch control 566
22.4 TSC low-power modes 567
22.5 TSC interrupts 567
22.6 TSC registers 568
22.6.1 TSC control register (TSC_CR) 568
22.6.2 TSC interrupt enable register (TSC_IER) 570
22.6.3 TSC interrupt clear register (TSC_ICR) 571
22.6.4 TSC interrupt status register (TSC_ISR) 572
22.6.5 TSC I/O hysteresis control register (TSC_IOHCR) 572
22.6.6 TSC I/O analog switch control register (TSC_IOASCR) 573
22.6.7 TSC I/O sampling control register (TSC_IOSCR) 573
22.6.8 TSC I/O channel control register (TSC_IOCCR) 574
22.6.9 TSC I/O group control status register (TSC_IOGCSR) 574
22.6.10 TSC I/O group x counter register (TSC_IOGxCR) (x = 1..7) 575
22.6.11 TSC register map 576

23 Random number generator (RNG) 578
23.1 Introduction 578
23.2 RNG main features 578
23.3 RNG functional description 578
23.3.1 Operation 579
23.3.2 Error management 579
23.4 RNG registers 580
23.4.1 RNG control register (RNG_CR) 580
23.4.2 RNG status register (RNG_SR) 580
23.4.3 RNG data register (RNG_DR) 581
23.4.4 RNG register map 582

24 Advanced encryption standard hardware accelerator (AES) 583

24.1 Introduction 583
24.2 AES main features 583
24.3 AES functional description 584
24.4 Encryption and derivation keys 585
24.5 AES chaining algorithms 586
24.5.1 Electronic codebook (ECB) 586
24.5.2 Cipher block chaining (CBC) 587
24.5.3 Counter Mode (CTR) 591
24.6 Galois counter mode (GCM) 592
24.7 AES cipher message authentication code mode (CMAC) 595
24.8 Data type 597
24.9 Operating modes 599
24.9.1 Mode 1: encryption 599
24.9.2 Mode 2: key derivation 600
24.9.3 Mode 3: decryption 601
24.9.4 Mode 4: key derivation and decryption 601
24.10 AES DMA interface 602
24.11 Error flags 603
24.12 Processing time 604
24.13 AES interrupts 605
24.14 AES registers 606
24.14.1 AES control register (AES_CR) 606
24.14.2 AES status register (AES_SR) 608
24.14.3 AES data input register (AES_DINR) 610
24.14.4 AES data output register (AES_DOUTR) 610
24.14.5 AES key register 0 (AES_KEYR0) (LSB: key [31:0]) 611
24.14.6 AES key register 1 (AES_KEYR1) (key[63:32]) 611
24.14.7 AES key register 2 (AES_KEYR2) (key [95:64]) 612
24.14.8 AES key register 3 (AES_KEYR3) (MSB: key[127:96]) 612
24.14.9 AES initialization vector register 0 (AES_IVR0) (LSB: IVR[31:0]) 612
24.14.10 AES initialization vector register 1 (AES_IVR1) (IVR[63:32]) 613
24.14.11 AES initialization vector register 2 (AES_IVR2) (IVR[95:64]) 614
24.14.12 AES initialization vector register 3 (AES_IVR3) (MSB: IVR[127:96]) . 614
24.14.13 AES key register 4 (AES_KEYR4) (key[159:128]) 614

24.14.14 AES key register 5 (AES_KEYR5) (key[191:160]) 615
24.14.15 AES key register 6 (AES_KEYR6) (key[223:192]) 615
24.14.16 AES key register 7 (AES_KEYR7) (MSB: key[255:224]) 615
24.14.17 AES Suspend registers (AES_SUSPxR) (x = 0..7) 617
24.14.18 AES register map 617

25 Advanced-control timers (TIM1) 619

25.1 TIM1 introduction 619
25.2 TIM1 main features 619
25.3 TIM1 functional description 621
25.3.1 Time-base unit 621
25.3.2 Counter modes 623
25.3.3 Repetition counter 634
25.3.4 External trigger input 636
25.3.5 Clock selection 637
25.3.6 Capture/compare channels 641
25.3.7 Input capture mode 644
25.3.8 PWM input mode 645
25.3.9 Forced output mode 645
25.3.10 Output compare mode 646
25.3.11 PWM mode 647
25.3.12 Asymmetric PWM mode 650
25.3.13 Combined PWM mode 651
25.3.14 Combined 3-phase PWM mode 652
25.3.15 Complementary outputs and dead-time insertion 653
25.3.16 Using the break function 655
25.3.17 Bidirectional break inputs 661
25.3.18 Clearing the OCxREF signal on an external event 662
25.3.19 6-step PWM generation 663
25.3.20 One-pulse mode 664
25.3.21 Retriggerable one pulse mode (OPM) 665
25.3.22 Encoder interface mode 666
25.3.23 UIF bit remapping 668
25.3.24 Timer input XOR function 669
25.3.25 Interfacing with Hall sensors 669
25.3.26 Timer synchronization 672
25.3.27 ADC synchronization 676

25.3.28 DMA burst mode 676
25.3.29 Debug mode 677
25.4 TIM1 registers 678
25.4.1 TIM1 control register 1 (TIMx_CR1) 678
25.4.2 TIM1 control register 2 (TIMx_CR2) 679
25.4.3 TIM1 slave mode control register (TIMx_SMCR) 682
25.4.4 TIM1 DMA/interrupt enable register (TIMx_DIER) 684
25.4.5 TIM1 status register (TIMx_SR) 686
25.4.6 TIM1 event generation register (TIMx_EGR) 688
25.4.7 TIM1 capture/compare mode register 1 (TIMx_CCMR1) 689
25.4.8 TIM1 capture/compare mode register 2 (TIMx_CCMR2) 693
25.4.9 TIM1 capture/compare enable register (TIMx_CCER) 695
25.4.10 TIM1 counter (TIMx_CNT) 699
25.4.11 TIM1 prescaler (TIMx_PSC) 699
25.4.12 TIM1 auto-reload register (TIMx_ARR) 699
25.4.13 TIM1 repetition counter register (TIMx_RCR) 700
25.4.14 TIM1 capture/compare register 1 (TIMx_CCR1) 700
25.4.15 TIM1 capture/compare register 2 (TIMx_CCR2) 700
25.4.16 TIM1 capture/compare register 3 (TIMx_CCR3) 701
25.4.17 TIM1 capture/compare register 4 (TIMx_CCR4) 701
25.4.18 TIM1 break and dead-time register (TIMx_BDTR) 702
25.4.19 TIM1 DMA control register (TIMx_DCR) 705
25.4.20 TIM1 DMA address for full transfer (TIMx_DMAR) 706
25.4.21 TIM1 option register 1 (TIM1_OR1) 707
25.4.22 TIM1 capture/compare mode register 3 (TIMx_CCMR3) 707
25.4.23 TIM1 capture/compare register 5 (TIMx_CCR5) 708
25.4.24 TIM1 capture/compare register 6 (TIMx_CCR6) 709
25.4.25 TIM1 option register 2 (TIM1_OR2) 710
25.4.26 TIM1 option register 3 (TIM1_OR3) 711
25.4.27 TIM1 register map 713

26 General-purpose timer (TIM2) 716
26.1 TIM2 introduction 716
26.2 TIM2 main features 716
26.3 TIM2 functional description 718
26.3.1 Time-base unit 718
26.3.2 Counter modes 720

26.3.3 Clock selection 730
26.3.4 Capture/compare channels 734
26.3.5 Input capture mode 736
26.3.6 PWM input mode 738
26.3.7 Forced output mode 739
26.3.8 Output compare mode 739
26.3.9 PWM mode 740
26.3.10 Asymmetric PWM mode 744
26.3.11 Combined PWM mode 744
26.3.12 Clearing the OCxREF signal on an external event 745
26.3.13 One-pulse mode 747
26.3.14 Retriggerable one pulse mode (OPM) 748
26.3.15 Encoder interface mode 749
26.3.16 UIF bit remapping 751
26.3.17 Timer input XOR function 751
26.3.18 Timers and external trigger synchronization 752
26.3.19 Timer synchronization 755
26.3.20 DMA burst mode 759
26.3.21 Debug mode 760
26.4 TIM2 registers 761
26.4.1 TIMx control register 1 (TIMx_CR1) 761
26.4.2 TIMx control register 2 (TIMx_CR2) 762
26.4.3 TIMx slave mode control register (TIMx_SMCR) 764
26.4.4 TIMx DMA/Interrupt enable register (TIMx_DIER) 767
26.4.5 TIMx status register (TIMx_SR) 768
26.4.6 TIMx event generation register (TIMx_EGR) 769
26.4.7 TIMx capture/compare mode register 1 (TIMx_CCMR1) 770
26.4.8 TIMx capture/compare mode register 2 (TIMx_CCMR2) 774
26.4.9 TIMx capture/compare enable register (TIMx_CCER) 776
26.4.10 TIMx counter (TIMx_CNT) 777
26.4.11 TIMx prescaler (TIMx_PSC) 778
26.4.12 TIMx auto-reload register (TIMx_ARR) 778
26.4.13 TIMx capture/compare register 1 (TIMx_CCR1) 779
26.4.14 TIMx capture/compare register 2 (TIMx_CCR2) 779
26.4.15 TIMx capture/compare register 3 (TIMx_CCR3) 780
26.4.16 TIMx capture/compare register 4 (TIMx_CCR4) 780
26.4.17 TIMx DMA control register (TIMx_DCR) 781

26.4.18 TIMx DMA address for full transfer (TIMx_DMAR) 781
26.4.19 TIM2 option register 1 (TIM2_OR1) 782
26.4.20 TIM2 option register 2 (TIM2_OR2) 782
26.4.21 TIMx register map 783

27 General-purpose timers (TIM15/TIM16) 786

27.1 TIM15/TIM16 introduction 786
27.2 TIM15 main features 786
27.3 TIM16 main features 787
27.4 TIM15/TIM16 functional description 790
27.4.1 Time-base unit 790
27.4.2 Counter modes 792
27.4.3 Repetition counter 796
27.4.4 Clock selection 797
27.4.5 Capture/compare channels 799
27.4.6 Input capture mode 802
27.4.7 PWM input mode (only for TIM15) 803
27.4.8 Forced output mode 804
27.4.9 Output compare mode 804
27.4.10 PWM mode 805
27.4.11 Combined PWM mode (TIM15 only) 806
27.4.12 Complementary outputs and dead-time insertion 808
27.4.13 Using the break function 810
27.4.14 One-pulse mode 814
27.4.15 UIF bit remapping 815
27.4.16 Timer input XOR function (TIM15 only) 816
27.4.17 External trigger synchronization (TIM15 only) 817
27.4.18 Slave mode: Combined reset + trigger mode 819
27.4.19 DMA burst mode 819
27.4.20 Timer synchronization (TIM15) 821
27.4.21 Debug mode 821
27.5 TIM15 registers 822
27.5.1 TIM15 control register 1 (TIM15_CR1) 822
27.5.2 TIM15 control register 2 (TIM15_CR2) 823
27.5.3 TIM15 slave mode control register (TIM15_SMCR) 825
27.5.4 TIM15 DMA/interrupt enable register (TIM15_DIER) 826
27.5.5 TIM15 status register (TIM15_SR) 827

27.5.6 TIM15 event generation register (TIM15_EGR) 829
27.5.7 TIM15 capture/compare mode register 1 (TIM15_CCMR1) 830
27.5.8 TIM15 capture/compare enable register (TIM15_CCER) 833
27.5.9 TIM15 counter (TIM15_CNT) 836
27.5.10 TIM15 prescaler (TIM15_PSC) 836
27.5.11 TIM15 auto-reload register (TIM15_ARR) 836
27.5.12 TIM15 repetition counter register (TIM15_RCR) 837
27.5.13 TIM15 capture/compare register 1 (TIM15_CCR1) 837
27.5.14 TIM15 capture/compare register 2 (TIM15_CCR2) 838
27.5.15 TIM15 break and dead-time register (TIM15_BDTR) 838
27.5.16 TIM15 DMA control register (TIM15_DCR) 840
27.5.17 TIM15 DMA address for full transfer (TIM15_DMAR) 840
27.5.18 TIM15 option register 1 (TIM15_OR1) 841
27.5.19 TIM15 option register 2 (TIM15_OR2) 841
27.5.20 TIM15 register map 843
27.6 TIM16 registers 846
27.6.1 TIM16 control register 1 (TIMx_CR1) 846
27.6.2 TIM16 control register 2 (TIMx_CR2) 847
27.6.3 TIM16 DMA/interrupt enable register (TIMx_DIER) 848
27.6.4 TIM16 status register (TIMx_SR) 849
27.6.5 TIM16 event generation register (TIMx_EGR) 850
27.6.6 TIM16 capture/compare mode register 1 (TIMx_CCMR1) 851
27.6.7 TIM16 capture/compare enable register (TIMx_CCER) 853
27.6.8 TIM16 counter (TIMx_CNT) 855
27.6.9 TIM16 prescaler (TIMx_PSC) 856
27.6.10 TIM16 auto-reload register (TIMx_ARR) 856
27.6.11 TIM16 repetition counter register (TIMx_RCR) 857
27.6.12 TIM16 capture/compare register 1 (TIMx_CCR1) 857
27.6.13 TIM16 break and dead-time register (TIMx_BDTR) 858
27.6.14 TIM16 DMA control register (TIMx_DCR) 860
27.6.15 TIM16 DMA address for full transfer (TIMx_DMAR) 860
27.6.16 TIM16 option register 1 (TIM16_OR1) 860
27.6.17 TIM16 option register 2 (TIM16_OR2) 861
27.6.18 TIM16 register map 863

28 Basic timers (TIM6/TIM7) 865
28.1 TIM6/TIM7 introduction 865

28.2 TIM6/TIM7 main features 865
28.3 TIM6/TIM7 functional description 866
28.3.1 Time-base unit 866
28.3.2 Counting mode 868
28.3.3 UIF bit remapping 871
28.3.4 Clock source 871
28.3.5 Debug mode 872
28.4 TIM6/TIM7 registers 872
28.4.1 TIM6/TIM7 control register 1 (TIMx_CR1) 872
28.4.2 TIM6/TIM7 control register 2 (TIMx_CR2) 874
28.4.3 TIM6/TIM7 DMA/Interrupt enable register (TIMx_DIER) 874
28.4.4 TIM6/TIM7 status register (TIMx_SR) 875
28.4.5 TIM6/TIM7 event generation register (TIMx_EGR) 875
28.4.6 TIM6/TIM7 counter (TIMx_CNT) 875
28.4.7 TIM6/TIM7 prescaler (TIMx_PSC) 876
28.4.8 TIM6/TIM7 auto-reload register (TIMx_ARR) 876
28.4.9 TIM6/TIM7 register map 877

29 Low-power timer (LPTIM) 878
29.1 Introduction 878
29.2 LPTIM main features 878
29.3 LPTIM implementation 878
29.4 LPTIM functional description 879
29.4.1 LPTIM block diagram 879
29.4.2 LPTIM reset and clocks 879
29.4.3 Glitch filter 880
29.4.4 Prescaler 881
29.4.5 Trigger multiplexer 881
29.4.6 Operating mode 882
29.4.7 Timeout function 883
29.4.8 Waveform generation 884
29.4.9 Register update 885
29.4.10 Counter mode 886
29.4.11 Timer enable 886
29.4.12 Encoder mode 887
29.5 LPTIM low power modes 888

29.6 LPTIM interrupts 889
29.7 LPTIM registers 890
29.7.1 LPTIM interrupt and status register (LPTIM_ISR) 890
29.7.2 LPTIM interrupt clear register (LPTIM_ICR) 891
29.7.3 LPTIM interrupt enable register (LPTIM_IER) 892
29.7.4 LPTIM configuration register (LPTIM_CFGR) 893
29.7.5 LPTIM control register (LPTIM_CR) 896
29.7.6 LPTIM compare register (LPTIM_CMP) 897
29.7.7 LPTIM autoreload register (LPTIM_ARR) 897
29.7.8 LPTIM counter register (LPTIM_CNT) 898
29.7.9 LPTIM1 option register (LPTIM1_OR) 898
29.7.10 LPTIM2 option register (LPTIM2_OR) 898
29.7.11 LPTIM register map 900

30 Infrared interface (IRTIM) 901

31 Independent watchdog (IWDG) 902
31.1 Introduction 902
31.2 IWDG main features 902
31.3 IWDG functional description 902
31.3.1 IWDG block diagram 902
31.3.2 Window option 903
31.3.3 Hardware watchdog 903
31.3.4 Low-power freeze 904
31.3.5 Behavior in Stop and Standby modes 904
31.3.6 Register access protection 904
31.3.7 Debug mode 904
31.4 IWDG registers 905
31.4.1 Key register (IWDG_KR) 905
31.4.2 Prescaler register (IWDG_PR) 906
31.4.3 Reload register (IWDG_RLR) 907
31.4.4 Status register (IWDG_SR) 908
31.4.5 Window register (IWDG_WINR) 909
31.4.6 IWDG register map 910

32 System window watchdog (WWDG) 911
32.1 Introduction 911

32.2 WWDG main features 911
32.3 WWDG functional description 911
32.3.1 Enabling the watchdog 912
32.3.2 Controlling the downcounter 912
32.3.3 Advanced watchdog interrupt feature 912
32.3.4 How to program the watchdog timeout 913
32.3.5 Debug mode 914
32.4 WWDG registers 915
32.4.1 Control register (WWDG_CR) 915
32.4.2 Configuration register (WWDG_CFR) 916
32.4.3 Status register (WWDG_SR) 916
32.4.4 WWDG register map 917

33 Real-time clock (RTC) 918
33.1 Introduction 918
33.2 RTC main features 919
33.3 RTC functional description 920
33.3.1 RTC block diagram 920
33.3.2 GPIOs controlled by the RTC 921
33.3.3 Clock and prescalers 923
33.3.4 Real-time clock and calendar 924
33.3.5 Programmable alarms 924
33.3.6 Periodic auto-wakeup 924
33.3.7 RTC initialization and configuration 925
33.3.8 Reading the calendar 927
33.3.9 Resetting the RTC 928
33.3.10 RTC synchronization 928
33.3.11 RTC reference clock detection 929
33.3.12 RTC smooth digital calibration 930
33.3.13 Time-stamp function 932
33.3.14 Tamper detection 932
33.3.15 Calibration clock output 934
33.3.16 Alarm output 935
33.4 RTC low-power modes 935
33.5 RTC interrupts 935
33.6 RTC registers 936

33.6.1 RTC time register (RTC_TR) 936
33.6.2 RTC date register (RTC_DR) 937
33.6.3 RTC control register (RTC_CR) 939
33.6.4 RTC initialization and status register (RTC_ISR) 942
33.6.5 RTC prescaler register (RTC_PRER) 945
33.6.6 RTC wakeup timer register (RTC_WUTR) 946
33.6.7 RTC alarm A register (RTC_ALRMAR) 947
33.6.8 RTC alarm B register (RTC_ALRMBR) 948
33.6.9 RTC write protection register (RTC_WPR) 949
33.6.10 RTC sub second register (RTC_SSR) 949
33.6.11 RTC shift control register (RTC_SHIFTR) 950
33.6.12 RTC timestamp time register (RTC_TSTR) 951
33.6.13 RTC timestamp date register (RTC_TSDR) 952
33.6.14 RTC time-stamp sub second register (RTC_TSSSR) 953
33.6.15 RTC calibration register (RTC_CALR) 954
33.6.16 RTC tamper configuration register (RTC_TAMPCR) 955
33.6.17 RTC alarm A sub second register (RTC_ALRMASSR) 958
33.6.18 RTC alarm B sub second register (RTC_ALRMBSSR) 959
33.6.19 RTC option register (RTC_OR) 960
33.6.20 RTC backup registers (RTC_BKPxR) 960
33.6.21 RTC register map 961

34 Inter-integrated circuit (I2C) interface 963

34.1 Introduction 963
34.2 I2C main features 963
34.3 I2C implementation 964
34.4 I2C functional description 964
34.4.1 I2C block diagram 965
34.4.2 I2C clock requirements 966
34.4.3 Mode selection 966
34.4.4 I2C initialization 968
34.4.5 Software reset 972
34.4.6 Data transfer 973
34.4.7 I2C slave mode 975
34.4.8 I2C master mode 984
34.4.9 I2C_TIMINGR register configuration examples 996
34.4.10 SMBus specific features 997

34.4.11 SMBus initialization 1000
34.4.12 SMBus: I2C_TIMEOUTR register configuration examples 1002
34.4.13 SMBus slave mode 1003
34.4.14 Wakeup from Stop mode on address match 1011
34.4.15 Error conditions 1011
34.4.16 DMA requests 1013
34.4.17 Debug mode 1014
34.5 I2C low-power modes 1014
34.6 I2C interrupts 1014
34.7 I2C registers 1016
34.7.1 Control register 1 (I2C_CR1) 1016
34.7.2 Control register 2 (I2C_CR2) 1019
34.7.3 Own address 1 register (I2C_OAR1) 1022
34.7.4 Own address 2 register (I2C_OAR2) 1023
34.7.5 Timing register (I2C_TIMINGR) 1024
34.7.6 Timeout register (I2C_TIMEOUTR) 1025
34.7.7 Interrupt and status register (I2C_ISR) 1026
34.7.8 Interrupt clear register (I2C_ICR) 1028
34.7.9 PEC register (I2C_PECR) 1029
34.7.10 Receive data register (I2C_RXDR) 1030
34.7.11 Transmit data register (I2C_TXDR) 1030
34.7.12 I2C register map 1031

35 Universal synchronous asynchronous receiver transmitter (USART) 1033
35.1 Introduction 1033
35.2 USART main features 1033
35.3 USART extended features 1034
35.4 USART implementation 1035
35.5 USART functional description 1035
35.5.1 USART character description 1038
35.5.2 USART transmitter 1040
35.5.3 USART receiver 1042
35.5.4 USART baud rate generation 1049
35.5.5 Tolerance of the USART receiver to clock deviation 1051
35.5.6 USART auto baud rate detection 1052

35.5.7 Multiprocessor communication using USART 1053
35.5.8 Modbus communication using USART 1055
35.5.9 USART parity control 1055
35.5.10 USART LIN (local interconnection network) mode 1057
35.5.11 USART synchronous mode 1059
35.5.12 USART Single-wire Half-duplex communication 1062
35.5.13 USART Smartcard mode 1062
35.5.14 USART IrDA SIR ENDEC block 1067
35.5.15 USART continuous communication in DMA mode 1069
35.5.16 RS232 hardware flow control and RS485 driver enable using USART 1071
35.5.17 Wakeup from Stop mode using USART 1073
35.6 USART low-power modes 1075
35.7 USART interrupts 1075
35.8 USART registers 1077
35.8.1 Control register 1 (USART_CR1) 1077
35.8.2 Control register 2 (USART_CR2) 1080
35.8.3 Control register 3 (USART_CR3) 1084
35.8.4 Baud rate register (USART_BRR) 1088
35.8.5 Guard time and prescaler register (USART_GTPR) 1088
35.8.6 Receiver timeout register (USART_RTOR) 1089
35.8.7 Request register (USART_RQR) 1090
35.8.8 Interrupt and status register (USART_ISR) 1091
35.8.9 Interrupt flag clear register (USART_ICR) 1096
35.8.10 Receive data register (USART_RDR) 1098
35.8.11 Transmit data register (USART_TDR) 1098
35.8.12 USART register map 1099

36 Low-power universal asynchronous receiver transmitter (LPUART) 1101
36.1 Introduction 1101
36.2 LPUART main features 1102
36.3 LPUART implementation 1102
36.4 LPUART functional description 1103
36.4.1 LPUART character description 1105
36.4.2 LPUART transmitter 1107
36.4.3 LPUART receiver 1109

36.4.4 LPUART baud rate generation 1112
36.4.5 Tolerance of the LPUART receiver to clock deviation 1114
36.4.6 Multiprocessor communication using LPUART 1115
36.4.7 LPUART parity control 1117
36.4.8 Single-wire Half-duplex communication using LPUART 1118
36.4.9 Continuous communication in DMA mode using LPUART 1118
36.4.10 RS232 Hardware flow control and RS485 Driver Enable using LPUART 1121
36.4.11 Wakeup from Stop mode using LPUART 1124
36.5 LPUART low-power mode 1125
36.6 LPUART interrupts 1126
36.7 LPUART registers 1128
36.7.1 Control register 1 (LPUART_CR1) 1128
36.7.2 Control register 2 (LPUART_CR2) 1131
36.7.3 Control register 3 (LPUART_CR3) 1133
36.7.4 Baud rate register (LPUART_BRR) 1135
36.7.5 Request register (LPUART_RQR) 1135
36.7.6 Interrupt & status register (LPUART_ISR) 1136
36.7.7 Interrupt flag clear register (LPUART_ICR) 1139
36.7.8 Receive data register (LPUART_RDR) 1140
36.7.9 Transmit data register (LPUART_TDR) 1140
36.7.10 LPUART register map 1142

37 Serial peripheral interface (SPI) 1143
37.1 Introduction 1143
37.2 SPI main features 1143
37.3 SPI implementation 1143
37.4 SPI functional description 1144
37.4.1 General description 1144
37.4.2 Communications between one master and one slave 1145
37.4.3 Standard multi-slave communication 1147
37.4.4 Multi-master communication 1148
37.4.5 Slave select (NSS) pin management 1149
37.4.6 Communication formats 1150
37.4.7 Configuration of SPI 1152
37.4.8 Procedure for enabling SPI 1153
37.4.9 Data transmission and reception procedures 1153

37.4.10 SPI status flags 1163
37.4.11 SPI error flags 1164
37.4.12 NSS pulse mode 1165
37.4.13 TI mode 1165
37.4.14 CRC calculation 1166
37.5 SPI interrupts 1168
37.6 SPI registers 1169
37.6.1 SPI control register 1 (SPIx_CR1) 1169
37.6.2 SPI control register 2 (SPIx_CR2) 1171
37.6.3 SPI status register (SPIx_SR) 1173
37.6.4 SPI data register (SPIx_DR) 1174
37.6.5 SPI CRC polynomial register (SPIx_CRCPR) 1174
37.6.6 SPI Rx CRC register (SPIx_RXCRCR) 1175
37.6.7 SPI Tx CRC register (SPIx_TXCRCR) 1175
37.6.8 SPI register map 1176

38 Serial audio interface (SAI) 1177
38.1 Introduction 1177
38.2 SAI main features 1177
38.3 SAI implementation 1178
38.4 SAI functional description 1179
38.4.1 SAI block diagram 1179
38.4.2 Main SAI modes 1180
38.4.3 SAI synchronization mode 1181
38.4.4 Audio data size 1181
38.4.5 Frame synchronization 1181
38.4.6 Slot configuration 1185
38.4.7 SAI clock generator 1187
38.4.8 Internal FIFOs 1189
38.4.9 AC’97 link controller 1191
38.4.10 SPDIF output 1192
38.4.11 Specific features 1194
38.4.12 Error flags 1199
38.4.13 Disabling the SAI 1202
38.4.14 SAI DMA interface 1202
38.5 SAI interrupts 1203

38.6 SAI registers 1204
38.6.1 Global configuration register (SAI_GCR) 1204
38.6.2 Configuration register 1 (SAI_ACR1 / SAI_BCR1) 1204
38.6.3 Configuration register 2 (SAI_ACR2 / SAI_BCR2) 1207
38.6.4 Frame configuration register (SAI_AFRCR / SAI_BFRCR) 1209
38.6.5 Slot register (SAI_ASLOTR / SAI_BSLOTR) 1210
38.6.6 Interrupt mask register 2 (SAI_AIM / SAI_BIM) 1212
38.6.7 Status register (SAI_ASR / SAI_BSR) 1213
38.6.8 Clear flag register (SAI_ACLRFR / SAI_BCLRFR) 1215
38.6.9 Data register (SAI_ADR / SAI_BDR) 1216
38.6.10 SAI register map 1217

39 Single Wire Protocol Master Interface (SWPMI) 1219
39.1 Introduction 1219
39.2 SWPMI main features 1220
39.3 SWPMI functional description 1221
39.3.1 SWPMI block diagram 1221
39.3.2 SWP initialization and activation 1221
39.3.3 SWP bus states 1222
39.3.4 SWPMI_IO (internal transceiver) bypass 1223
39.3.5 SWPMI Bit rate 1223
39.3.6 SWPMI frame handling 1224
39.3.7 Transmission procedure 1224
39.3.8 Reception procedure 1228
39.3.9 Error management 1233
39.3.10 Loopback mode 1235
39.4 SWPMI low-power modes 1235
39.5 SWPMI interrupts 1235
39.6 SWPMI registers 1237
39.6.1 SWPMI Configuration/Control register (SWPMI_CR) 1237
39.6.2 SWPMI Bitrate register (SWPMI_BRR) 1239
39.6.3 SWPMI Interrupt and Status register (SWPMI_ISR) 1240
39.6.4 SWPMI Interrupt Flag Clear register (SWPMI_ICR) 1242
39.6.5 SWPMI Interrupt Enable register (SMPMI_IER) 1243
39.6.6 SWPMI Receive Frame Length register (SWPMI_RFL) 1244
39.6.7 SWPMI Transmit data register (SWPMI_TDR) 1245

39.6.8 SWPMI Receive data register (SWPMI_RDR) 1246
39.6.9 SWPMI Option register (SWPMI_OR) 1247
39.6.10 SWPMI register map and reset value table 1248

40 SD/SDIO/MMC card host interface (SDMMC) 1249

40.1 SDMMC main features 1249
40.2 SDMMC bus topology 1249
40.3 SDMMC functional description 1251
40.3.1 SDMMC adapter 1253
40.3.2 SDMMC APB2 interface 1264
40.4 Card functional description 1265
40.4.1 Card identification mode 1265
40.4.2 Card reset 1265
40.4.3 Operating voltage range validation 1266
40.4.4 Card identification process 1266
40.4.5 Block write 1267
40.4.6 Block read 1268
40.4.7 Stream access, stream write and stream read (MultiMediaCard only) 1268
40.4.8 Erase: group erase and sector erase 1270
40.4.9 Wide bus selection or deselection 1270
40.4.10 Protection management 1270
40.4.11 Card status register 1274
40.4.12 SD status register 1277
40.4.13 SD I/O mode 1281
40.4.14 Commands and responses 1282
40.5 Response formats 1285
40.5.1 R1 (normal response command) 1286
40.5.2 R1b 1286
40.5.3 R2 (CID, CSD register) 1286
40.5.4 R3 (OCR register) 1287
40.5.5 R4 (Fast I/O) 1287
40.5.6 R4b 1287
40.5.7 R5 (interrupt request) 1288
40.5.8 R6 1288
40.6 SDIO I/O card-specific operations 1289
40.6.1 SDIO I/O read wait operation by SDMMC_D2 signalling 1289

40.6.2 SDIO read wait operation by stopping SDMMC_CK 1290
40.6.3 SDIO suspend/resume operation 1290
40.6.4 SDIO interrupts 1290
40.7 HW flow control 1290
40.8 SDMMC registers 1291
40.8.1 SDMMC power control register (SDMMC_POWER) 1291
40.8.2 SDMMC clock control register (SDMMC_CLKCR) 1291
40.8.3 SDMMC argument register (SDMMC_ARG) 1293
40.8.4 SDMMC command register (SDMMC_CMD) 1293
40.8.5 SDMMC command response register (SDMMC_RESPCMD) 1294
40.8.6 SDMMC response 1..4 register (SDMMC_RESPx) 1294
40.8.7 SDMMC data timer register (SDMMC_DTIMER) 1295
40.8.8 SDMMC data length register (SDMMC_DLEN) 1296
40.8.9 SDMMC data control register (SDMMC_DCTRL) 1296
40.8.10 SDMMC data counter register (SDMMC_DCOUNT) 1298
40.8.11 SDMMC status register (SDMMC_STA) 1298
40.8.12 SDMMC interrupt clear register (SDMMC_ICR) 1299
40.8.13 SDMMC mask register (SDMMC_MASK) 1301
40.8.14 SDMMC FIFO counter register (SDMMC_FIFOCNT) 1303
40.8.15 SDMMC data FIFO register (SDMMC_FIFO) 1304
40.8.16 SDMMC register map 1305

41 Controller area network (bxCAN) 1307
41.1 Introduction 1307
41.2 bxCAN main features 1307
41.3 bxCAN general description 1308
41.3.1 CAN 2.0B active core 1308
41.3.2 Control, status and configuration registers 1308
41.3.3 Tx mailboxes 1308
41.3.4 Acceptance filters 1309
41.4 bxCAN operating modes 1309
41.4.1 Initialization mode 1309
41.4.2 Normal mode 1309
41.4.3 Sleep mode (low-power) 1310
41.5 Test mode 1311
41.5.1 Silent mode 1311

41.5.2 Loop back mode 1312
41.5.3 Loop back combined with silent mode 1312
41.6 Behavior in Debug mode 1313
41.7 bxCAN functional description 1313
41.7.1 Transmission handling 1313
41.7.2 Time triggered communication mode 1315
41.7.3 Reception handling 1315
41.7.4 Identifier filtering 1316
41.7.5 Message storage 1320
41.7.6 Error management 1322
41.7.7 Bit timing 1322
41.8 bxCAN interrupts 1325
41.9 CAN registers 1326
41.9.1 Register access protection 1326
41.9.2 CAN control and status registers 1326
41.9.3 CAN mailbox registers 1336
41.9.4 CAN filter registers 1343
41.9.5 bxCAN register map 1347

42 Universal serial bus full-speed device interface (USB) 1351
42.1 Introduction 1351
42.2 USB main features 1351
42.3 USB implementation 1351
42.4 USB functional description 1352
42.4.1 Description of USB blocks 1353
42.5 Programming considerations 1354
42.5.1 Generic USB device programming 1354
42.5.2 System and power-on reset 1355
42.5.3 Double-buffered endpoints 1360
42.5.4 Isochronous transfers 1362
42.5.5 Suspend/Resume events 1363
42.6 USB registers 1366
42.6.1 Common registers 1366
42.6.2 Buffer descriptor table 1379
42.6.3 USB register map 1382

43 Debug support (DBG) 1384

43.1 Overview 1384

43.2 Reference ARM® documentation 1385

43.3 SWJ debug port (serial wire and JTAG) 1385

43.3.1 Mechanism to select the JTAG-DP or the SW-DP 1386

43.4 Pinout and debug port pins 1386

43.4.1 SWJ debug port pins 1387

43.4.2 Flexible SWJ-DP pin assignment 1387

43.4.3 Internal pull-up and pull-down on JTAG pins 1388

43.4.4 Using serial wire and releasing the unused debug pins as GPIOs . . 1389

43.5 STM32L431/433/443 JTAG TAP connection 1389

43.6 ID codes and locking mechanism 1390

43.6.1 MCU device ID code 1391

43.6.2 Boundary scan TAP 1391

43.6.3 Cortex®-M4 TAP 1391

43.6.4 Cortex®-M4 JEDEC-106 ID code 1391

43.7 JTAG debug port 1392

43.8 SW debug port 1393

43.8.1 SW protocol introduction 1393

43.8.2 SW protocol sequence 1393

43.8.3 SW-DP state machine (reset, idle states, ID code) 1394

43.8.4 DP and AP read/write accesses 1395

43.8.5 SW-DP registers 1395

43.8.6 SW-AP registers 1396

43.9 AHB-AP (AHB access port) - valid for both JTAG-DP and SW-DP 1396

43.10 Core debug 1397

43.11 Capability of the debugger host to connect under system reset 1398

43.12 FPB (Flash patch breakpoint) 1398

43.13 DWT (data watchpoint trigger) 1399

43.14 ITM (instrumentation trace macrocell) 1399

43.14.1 General description 1399

43.14.2 Time stamp packets, synchronization and overflow packets 1399

43.15 ETM (Embedded trace macrocell) 1401

43.15.1 General description 1401

43.15.2 Signal protocol, packet types 1401
43.15.3 Main ETM registers 1401
43.15.4 Configuration example 1402
43.16 MCU debug component (DBGMCU) 1402
43.16.1 Debug support for low-power modes 1402
43.16.2 Debug support for timers, RTC, watchdog, bxCAN and I^2C 1403
43.16.3 Debug MCU configuration register (DBGMCU_CR) 1403
43.16.4 Debug MCU APB1 freeze register1(DBGMCU_APB1FZR1) 1404
43.16.5 Debug MCU APB1 freeze register 2 (DBGMCU_APB1FZR2) 1406
43.16.6 Debug MCU APB2 freeze register (DBGMCU_APB2FZR) 1406
43.17 TPIU (trace port interface unit) 1408
43.17.1 Introduction 1408
43.17.2 TRACE pin assignment 1408
43.17.3 TPUI formatter 1410
43.17.4 TPUI frame synchronization packets 1411
43.17.5 Transmission of the synchronization frame packet 1411
43.17.6 Synchronous mode 1411
43.17.7 Asynchronous mode 1412
43.17.8 TRACECLKIN connection inside the STM32L431/433/443 1412
43.17.9 TPIU registers 1413
43.17.10 Example of configuration 1414
43.18 DBG register map 1415

44 Device electronic signature 1416
44.1 Unique device ID register (96 bits) 1416
44.2 Flash size data register 1417
44.3 Package data register 1418

45 Revision history 1424

List of tables

Table 1. Product specific features . . . 56
Table 2. STM32L431/433/443 memory map and peripheral register boundary addresses . . . 62
Table 3. SRAM2 organization . . . 67
Table 4. Boot modes . . . 68
Table 5. Memory mapping vs. Boot mode/Physical remap . . . 70
Table 6. Flash module - 256 KB single bank organization . . . 72
Table 7. Flash module - 128 KB single bank organization . . . 73
Table 8. Number of wait states according to CPU clock (HCLK) frequency . . . 74
Table 9. Option byte format . . . 83
Table 10. Option byte organization . . . 83
Table 11. Flash memory read protection status . . . 89
Table 12. Access status versus protection level and execution modes . . . 91
Table 13. Flash interrupt request . . . 94
Table 14. Flash interface - register map and reset values . . . 107
Table 15. Segment accesses according to the Firewall state . . . 112
Table 16. Segment granularity and area ranges . . . 113
Table 17. Firewall register map and reset values . . . 120
Table 18. PVM features . . . 128
Table 19. Low-power mode summary . . . 131
Table 20. Functionalities depending on the working mode . . . 132
Table 21. Low-power run . . . 135
Table 22. Sleep . . . 137
Table 23. Low-power sleep . . . 138
Table 24. Stop 0 mode . . . 140
Table 25. Stop 1 mode . . . 141
Table 26. Stop 2 mode . . . 143
Table 27. Standby mode . . . 145
Table 28. Shutdown mode . . . 147
Table 29. PWR register map and reset values . . . 162
Table 30. Clock source frequency . . . 175
Table 31. RCC register map and reset values . . . 228
Table 32. Effect of low-power modes on CRS . . . 237
Table 33. Interrupt control bits . . . 238
Table 34. CRS register map and reset values . . . 243
Table 35. Port bit configuration table . . . 246
Table 36. GPIO register map and reset values . . . 260
Table 37. SYSCFG register map and reset values . . . 273
Table 38. STM32L431/433/443 peripherals interconnect matrix . . . 274
Table 39. DMA implementation . . . 281
Table 40. Programmable data width & endian behavior (when bits PINC = MINC = 1) . . . 285
Table 41. DMA interrupt requests . . . 286
Table 42. Summary of the DMA1 requests for each channel . . . 289
Table 43. Summary of the DMA2 requests for each channel . . . 290
Table 44. DMA register map and reset values . . . 301
Table 45. STM32L431/433/443 vector table . . . 305
Table 46. EXTI lines connections . . . 312
Table 47. Extended interrupt/event controller register map and reset values . . . 320

Table 48. CRC internal input/output signals . . . 323
Table 49. CRC register map and reset values . . . 327
Table 50. QUADSPI interrupt requests. . . . 343
Table 51. QUADSPI register map and reset values . . . 356
Table 52. ADC interfaces . . . 359
Table 53. ADC internal signals . . . 361
Table 54. ADC pins. . . . 361
Table 55. Configuring the trigger polarity for regular external triggers . . . 379
Table 56. Configuring the trigger polarity for injected external triggers . . . 379
Table 57. ADC1, ADC2 - External triggers for regular channels (devices with 2 ADCs) . . . 380
Table 58. ADC1 - External triggers for regular channels (devices with single ADC) . . . 381
Table 59. ADC1, ADC2 - External trigger for injected channels (devices with 2 ADCs) . . . 381
Table 60. ADC1 - External trigger for injected channels (devices with single ADC). . . . 382
Table 61. TSAR timings depending on resolution . . . 392
Table 62. Offset computation versus data resolution . . . 395
Table 63. Analog watchdog channel selection . . . 405
Table 64. Analog watchdog 1 comparison . . . 406
Table 65. Analog watchdog 2 and 3 comparison . . . 406
Table 66. Maximum output results versus N and M (gray cells indicate truncation). . . . 410
Table 67. Oversampler operating modes summary . . . 414
Table 68. ADC interrupts per each ADC. . . . 434
Table 69. DELAY bits versus ADC resolution. . . . 464
Table 70. ADC global register map. . . . 465
Table 71. ADC register map and reset values for each ADC (offset=0x000 for master ADC, 0x100 for slave ADC). . . . 466
Table 72. ADC register map and reset values (master and slave ADC common registers) offset =0x300) . . . 468
Table 73. DAC pins. . . . 471
Table 74. Sample and refresh timings . . . 477
Table 75. Channel output modes summary . . . 478
Table 76. Effect of low-power modes on DAC . . . 485
Table 77. DAC register map . . . 499
Table 78. VREFBUF buffer modes . . . 501
Table 79. VREFBUF register map and reset values. . . . 503
Table 80. COMP1 input plus assignment . . . 505
Table 81. COMP1 input minus assignment . . . 506
Table 82. COMP2 input plus assignment . . . 506
Table 83. COMP2 input minus assignment . . . 506
Table 84. Comparator behavior in the low power modes . . . 510
Table 85. Interrupt control bits . . . 510
Table 86. COMP register map and reset values. . . . 516
Table 87. Operational amplifier possible connections . . . 518
Table 88. Operating modes and calibration . . . 523
Table 89. Effect of low-power modes on the OPAMP . . . 524
Table 90. OPAMP register map and reset values . . . 527
Table 91. Example of frame rate calculation . . . 531
Table 92. Blink frequency . . . 539
Table 93. Remapping capability . . . 544
Table 94. LCD behavior in low-power modes. . . . 549
Table 95. LCD interrupt requests . . . 549

Table 96. LCD register map and reset values . . . 556
Table 97. Acquisition sequence summary . . . 562
Table 98. Spread spectrum deviation versus AHB clock frequency . . . 564
Table 99. I/O state depending on its mode and IODEF bit value . . . 565
Table 100. Effect of low-power modes on TSC . . . 567
Table 101. Interrupt control bits . . . 567
Table 102. TSC register map and reset values . . . 576
Table 103. RNG register map and reset map . . . 582
Table 104. Processing time (in clock cycle) . . . 604
Table 105. Processing time (in clock cycle) for ECB, CBC and CTR . . . 604
Table 106. Processing time (in clock cycle) for GCM and CMAC. . . . 604
Table 107. AES interrupt requests . . . 605
Table 108. AES register map . . . 617
Table 109. Behavior of timer outputs versus BRK/BRK2 inputs . . . 660
Table 110. Counting direction versus encoder signals . . . 667
Table 111. TIM1 internal trigger connection . . . 684
Table 112. Output control bits for complementary OCx and OCxN channels with break feature . . . 698
Table 113. TIM1 register map and reset values . . . 713
Table 114. Counting direction versus encoder signals . . . 750
Table 115. TIMx internal trigger connection . . . 766
Table 116. Output control bit for standard OCx channels. . . . 777
Table 117. TIM2 register map and reset values . . . 783
Table 118. TIMx Internal trigger connection . . . 826
Table 119. Output control bits for complementary OCx and OCxN channels with break feature (TIM15) . . . 835
Table 120. TIM15 register map and reset values . . . 843
Table 121. Output control bits for complementary OCx and OCxN channels with break feature (TIM16/17) . . . 855
Table 122. TIM16 register map and reset values . . . 863
Table 123. TIM6/TIM7 register map and reset values . . . 877
Table 124. STM32L4xx LPTIM features . . . 878
Table 125. Prescaler division ratios . . . 881
Table 126. Encoder counting scenarios . . . 887
Table 127. Effect of low-power modes on the LPTIM . . . 888
Table 128. LPTIM external trigger connection . . . 895
Table 129. LPTIM register map and reset values . . . 900
Table 130. IWDG register map and reset values . . . 910
Table 131. WWDG register map and reset values . . . 917
Table 132. RTC pin PC13 configuration . . . 921
Table 133. RTC_OUT mapping . . . 922
Table 134. RTC functions over modes . . . 923
Table 135. Effect of low-power modes on RTC . . . 935
Table 136. Interrupt control bits . . . 936
Table 137. RTC register map and reset values . . . 961
Table 138. STM32L431/433/443 I2C implementation . . . 964
Table 139. Comparison of analog vs. digital filters . . . 968
Table 140. I2C-SMBUS specification data setup and hold times . . . 971
Table 141. I2C configuration table . . . 975
Table 142. I2C-SMBUS specification clock timings . . . 986
Table 143. Examples of timings settings for fI2CCLK = 8 MHz . . . 996
Table 144. Examples of timings settings for fI2CCLK = 16 MHz . . . 996
Table 145. Examples of timings settings for fI2CCLK = 48 MHz . . . 997

Table 146. SMBus timeout specifications . . . 999
Table 147. SMBUS with PEC configuration . . . 1001
Table 148. Examples of TIMEOUTA settings for various I2CCLK frequencies (max $t_{TIMEOUT}$ = 25 ms) . . . 1002
Table 149. Examples of TIMEOUTB settings for various I2CCLK frequencies . . . 1003
Table 150. Examples of TIMEOUTA settings for various I2CCLK frequencies (max t_{IDLE} = 50 µs) . . . 1003
Table 151. Effect of low-power modes on the I2C . . . 1014
Table 152. I2C Interrupt requests . . . 1015
Table 153. I2C register map and reset values . . . 1031
Table 154. STM32L431/433/443 USART/LPUART features . . . 1035
Table 155. Noise detection from sampled data . . . 1047
Table 156. Error calculation for programmed baud rates at f_{CK} = 72MHz in both cases of oversampling by 16 or by 8 . . . 1050
Table 157. Tolerance of the USART receiver when BRR [3:0] = 0000 . . . 1051
Table 158. Tolerance of the USART receiver when BRR [3:0] is different from 0000 . . . 1052
Table 159. Frame formats . . . 1056
Table 160. Effect of low-power modes on the USART . . . 1075
Table 161. USART interrupt requests . . . 1075
Table 162. USART register map and reset values . . . 1099
Table 163. Error calculation for programmed baudrates at fck = 32,768 KHz . . . 1113
Table 164. Error calculation for programmed baudrates at fck = 80 MHz . . . 1113
Table 165. Tolerance of the LPUART receiver when BRR [3:0] is different from 0000 . . . 1114
Table 166. Frame formats . . . 1117
Table 167. Effect of low-power modes on the LPUART . . . 1125
Table 168. LPUART interrupt requests . . . 1126
Table 169. LPUART register map and reset values . . . 1142
Table 170. STM32L431/433/443 SPI implementation . . . 1144
Table 171. SPI interrupt requests . . . 1168
Table 172. SPI register map and reset values . . . 1176
Table 173. STM32L431/433/443 SAI interfaces . . . 1178
Table 174. External Synchronization Selection . . . 1181
Table 175. Example of possible audio frequency sampling range . . . 1188
Table 176. SOPD pattern . . . 1193
Table 177. Parity bit calculation . . . 1193
Table 178. Audio sampling frequency versus symbol rates . . . 1194
Table 179. SAI interrupt sources . . . 1203
Table 180. SAI register map and reset values . . . 1217
Table 181. Effect of low-power modes on SWPMI . . . 1235
Table 182. Interrupt control bits . . . 1236
Table 183. Buffer modes selection for transmission/reception . . . 1238
Table 184. swpmi register map and reset values . . . 1248
Table 185. SDMMC I/O definitions . . . 1252
Table 186. Command format . . . 1257
Table 187. Short response format . . . 1258
Table 188. Long response format . . . 1258
Table 189. Command path status flags . . . 1258
Table 190. Data token format . . . 1261
Table 191. DPSM flags . . . 1262
Table 192. Transmit FIFO status flags . . . 1263
Table 193. Receive FIFO status flags . . . 1263
Table 194. Card status . . . 1274

Table 195. SD status . . . 1277
Table 196. Speed class code field . . . 1278
Table 197. Performance move field . . . 1279
Table 198. AU_SIZE field . . . 1279
Table 199. Maximum AU size . . . 1279
Table 200. Erase size field . . . 1280
Table 201. Erase timeout field . . . 1280
Table 202. Erase offset field . . . 1280
Table 203. Block-oriented write commands . . . 1283
Table 204. Block-oriented write protection commands . . . 1284
Table 205. Erase commands . . . 1284
Table 206. I/O mode commands . . . 1284
Table 207. Lock card . . . 1285
Table 208. Application-specific commands . . . 1285
Table 209. R1 response . . . 1286
Table 210. R2 response . . . 1286
Table 211. R3 response . . . 1287
Table 212. R4 response . . . 1287
Table 213. R4b response . . . 1287
Table 214. R5 response . . . 1288
Table 215. R6 response . . . 1289
Table 216. Response type and SDMMC_RESPx registers . . . 1295
Table 217. SDMMC register map . . . 1305
Table 218. Transmit mailbox mapping . . . 1321
Table 219. Receive mailbox mapping . . . 1321
Table 220. bxCAN register map and reset values . . . 1347
Table 221. STM32L433/443 USB implementation . . . 1351
Table 222. Double-buffering buffer flag definition . . . 1361
Table 223. Bulk double-buffering memory buffers usage . . . 1361
Table 224. Isochronous memory buffers usage . . . 1363
Table 225. Resume event detection . . . 1365
Table 226. Reception status encoding . . . 1377
Table 227. Endpoint type encoding . . . 1378
Table 228. Endpoint kind meaning . . . 1378
Table 229. Transmission status encoding . . . 1378
Table 230. Definition of allocated buffer memory . . . 1381
Table 231. USB register map and reset values . . . 1382
Table 232. SWJ debug port pins . . . 1387
Table 233. Flexible SWJ-DP pin assignment . . . 1387
Table 234. JTAG debug port data registers . . . 1392
Table 235. 32-bit debug port registers addressed through the shifted value A[3:2] . . . 1393
Table 236. Packet request (8-bits) . . . 1394
Table 237. ACK response (3 bits) . . . 1394
Table 238. DATA transfer (33 bits) . . . 1394
Table 239. SW-DP registers . . . 1395
Table 240. Cortex®-M4 AHB-AP registers . . . 1397
Table 241. Core debug registers . . . 1397
Table 242. Main ITM registers . . . 1400
Table 243. Main ETM registers . . . 1401
Table 244. Asynchronous TRACE pin assignment . . . 1408
Table 245. Synchronous TRACE pin assignment . . . 1409
Table 246. Flexible TRACE pin assignment . . . 1409

Table 247. Important TPIU registers 1413
Table 248. DBG register map and reset values 1415
Table 249. Document revision history 1424

List of figures

Figure 1. System architecture . . . 58
Figure 2. Memory map . . . 61
Figure 3. Sequential 16 bits instructions execution . . . 76
Figure 4. Changing the Read protection (RDP) level . . . 91
Figure 5. STM32L431/433/443 firewall connection schematics . . . 110
Figure 6. Firewall functional states . . . 114
Figure 7. Power supply overview . . . 122
Figure 8. Brown-out reset waveform . . . 127
Figure 9. PVD thresholds . . . 127
Figure 10. Low-power modes possible transitions . . . 130
Figure 11. Simplified diagram of the reset circuit . . . 165
Figure 12. Clock tree . . . 169
Figure 13. HSE/ LSE clock sources . . . 170
Figure 14. Frequency measurement with TIM15 in capture mode . . . 178
Figure 15. Frequency measurement with TIM16 in capture mode . . . 179
Figure 16. CRS block diagram . . . 234
Figure 17. CRS counter behavior . . . 235
Figure 18. Basic structure of an I/O port bit . . . 245
Figure 19. Basic structure of a five-volt tolerant I/O port bit . . . 245
Figure 20. Input floating/pull up/pull down configurations . . . 250
Figure 21. Output configuration . . . 251
Figure 22. Alternate function configuration . . . 252
Figure 23. High impedance-analog configuration . . . 252
Figure 24. DMA block diagram . . . 282
Figure 25. DMA1 request mapping . . . 288
Figure 26. DMA2 request mapping . . . 289
Figure 27. Configurable interrupt/event block diagram . . . 310
Figure 28. External interrupt/event GPIO mapping . . . 312
Figure 29. CRC calculation unit block diagram . . . 323
Figure 30. QUADSPI block diagram when dual-flash mode is disabled . . . 328
Figure 31. QUADSPI block diagram when dual-flash mode is enabled . . . 329
Figure 32. An example of a read command in quad mode . . . 330
Figure 33. An example of a DDR command in quad mode . . . 333
Figure 34. nCS when CKMODE = 0 (T = CLK period) . . . 341
Figure 35. nCS when CKMODE = 1 in SDR mode (T = CLK period) . . . 341
Figure 36. nCS when CKMODE = 1 in DDR mode (T = CLK period) . . . 342
Figure 37. nCS when CKMODE = 1 with an abort (T = CLK period) . . . 342
Figure 38. ADC block diagram . . . 360
Figure 39. ADC clock scheme . . . 363
Figure 40. ADC1 connectivity (devices with 2 ADCs) . . . 364
Figure 41. ADC1 connectivity (devices with single ADC) . . . 365
Figure 42. ADC2 connectivity (devices with 2 ADCs) . . . 366
Figure 43. ADC calibration . . . 369
Figure 44. Updating the ADC calibration factor . . . 370
Figure 45. Mixing single-ended and differential channels . . . 370
Figure 46. Enabling / Disabling the ADC . . . 372
Figure 47. Analog to digital conversion time . . . 377
Figure 48. Stopping ongoing regular conversions . . . 378

Figure 49. Stopping ongoing regular and injected conversions . . . 378
Figure 50. Triggers are shared between ADC master and ADC slave (devices with 2 ADCs) . . . 380
Figure 51. Injected conversion latency . . . 383
Figure 52. Example of JSQR queue of context (sequence change) . . . 386
Figure 53. Example of JSQR queue of context (trigger change) . . . 386
Figure 54. Example of JSQR queue of context with overflow before conversion . . . 387
Figure 55. Example of JSQR queue of context with overflow during conversion . . . 387
Figure 56. Example of JSQR queue of context with empty queue (case JQM=0) . . . 388
Figure 57. Example of JSQR queue of context with empty queue (case JQM=1) . . . 388
Figure 58. Flushing JSQR queue of context by setting JADSTP=1 (JQM=0). Case when JADSTP occurs during an ongoing conversion. . . . 389
Figure 59. Flushing JSQR queue of context by setting JADSTP=1 (JQM=0). Case when JADSTP occurs during an ongoing conversion and a new trigger occurs. . . . 389
Figure 60. Flushing JSQR queue of context by setting JADSTP=1 (JQM=0). Case when JADSTP occurs outside an ongoing conversion . . . 390
Figure 61. Flushing JSQR queue of context by setting JADSTP=1 (JQM=1) . . . 390
Figure 62. Flushing JSQR queue of context by setting ADDIS=1 (JQM=0). . . . 391
Figure 63. Flushing JSQR queue of context by setting ADDIS=1 (JQM=1). . . . 391
Figure 64. Single conversions of a sequence, software trigger . . . 393
Figure 65. Continuous conversion of a sequence, software trigger . . . 393
Figure 66. Single conversions of a sequence, hardware trigger . . . 394
Figure 67. Continuous conversions of a sequence, hardware trigger . . . 394
Figure 68. Right alignment (offset disabled, unsigned value) . . . 396
Figure 69. Right alignment (offset enabled, signed value). . . . 396
Figure 70. Left alignment (offset disabled, unsigned value) . . . 397
Figure 71. Left alignment (offset enabled, signed value) . . . 397
Figure 72. Example of overrun (OVR) . . . 398
Figure 73. AUTODLY=1, regular conversion in continuous mode, software trigger . . . 401
Figure 74. AUTODLY=1, regular HW conversions interrupted by injected conversions (DISCEN=0; JDISCEN=0) . . . 402
Figure 75. AUTODLY=1, regular HW conversions interrupted by injected conversions (DISCEN=1, JDISCEN=1) . . . 403
Figure 76. AUTODLY=1, regular continuous conversions interrupted by injected conversions . . . 404
Figure 77. AUTODLY=1 in auto- injected mode (JAUTO=1) . . . 404
Figure 78. Analog watchdog's guarded area . . . 405
Figure 79. ADCy_AWDx_OUT signal generation (on all regular channels). . . . 407
Figure 80. ADCy_AWDx_OUT signal generation (AWDx flag not cleared by SW) . . . 408
Figure 81. ADCy_AWDx_OUT signal generation (on a single regular channel) . . . 408
Figure 82. ADCy_AWDx_OUT signal generation (on all injected channels) . . . 408
Figure 83. 20-bit to 16-bit result truncation . . . 409
Figure 84. Numerical example with 5-bits shift and rounding . . . 409
Figure 85. Triggered regular oversampling mode (TROVS bit = 1) . . . 411
Figure 86. Regular oversampling modes (4x ratio) . . . 412
Figure 87. Regular and injected oversampling modes used simultaneously . . . 413
Figure 88. Triggered regular oversampling with injection . . . 413
Figure 89. Oversampling in auto-injected mode . . . 414
Figure 90. Dual ADC block diagram(1) . . . 416
Figure 91. Injected simultaneous mode on 4 channels: dual ADC mode . . . 417
Figure 92. Regular simultaneous mode on 16 channels: dual ADC mode . . . 419
Figure 93. Interleaved mode on 1 channel in continuous conversion mode: dual ADC mode. . . . 421

Figure 94. Interleaved mode on 1 channel in single conversion mode: dual ADC mode. 421
Figure 95. Interleaved conversion with injection 422
Figure 96. Alternate trigger: injected group of each ADC 423
Figure 97. Alternate trigger: 4 injected channels (each ADC) in discontinuous mode 424
Figure 98. Alternate + regular simultaneous 425
Figure 99. Case of trigger occurring during injected conversion 425
Figure 100. Interleaved single channel CH0 with injected sequence CH11, CH12 426
Figure 101. Two Interleaved channels (CH1, CH2) with injected sequence CH11, CH12 - case 1: Master interrupted first 426
Figure 102. Two Interleaved channels (CH1, CH2) with injected sequence CH11, CH12 - case 2: Slave interrupted first 426
Figure 103. DMA Requests in regular simultaneous mode when MDMA=0b00 427
Figure 104. DMA requests in regular simultaneous mode when MDMA=0b10 428
Figure 105. DMA requests in interleaved mode when MDMA=0b10 428
Figure 106. Temperature sensor channel block diagram (devices with 2 ADCs) 430
Figure 107. Temperature sensor channel block diagram (devices with single ADC) 431
Figure 108. VBAT channel block diagram (devices with 2 ADCs) 432
Figure 109. VBAT channel block diagram (devices with single ADC) 432
Figure 110. VREFINT channel block diagram 433
Figure 111. DAC channel block diagram 470
Figure 112. Data registers in single DAC channel mode 471
Figure 113. Data registers in dual DAC channel mode 472
Figure 114. Timing diagram for conversion with trigger disabled TEN = 0 472
Figure 115. DAC LFSR register calculation algorithm 474
Figure 116. DAC conversion (SW trigger enabled) with LFSR wave generation 474
Figure 117. DAC triangle wave generation 475
Figure 118. DAC conversion (SW trigger enabled) with triangle wave generation 475
Figure 119. DAC sample and hold mode phase diagram 478
Figure 120. Comparators block diagram 505
Figure 121. Window mode 508
Figure 122. Comparator hysteresis 508
Figure 123. Comparator output blanking 509
Figure 124. Standalone mode: external gain setting mode 519
Figure 125. Follower configuration 520
Figure 126. PGA mode, internal gain setting (x2/x4/x8/x16), inverting input not used 521
Figure 127. PGA mode, internal gain setting (x2/x4/x8/x16), inverting input used for filtering 522
Figure 128. LCD controller block diagram 530
Figure 129. 1/3 bias, 1/4 duty 532
Figure 130. Static duty case 1 533
Figure 131. Static duty case 2 534
Figure 132. 1/2 duty, 1/2 bias 535
Figure 133. 1/3 duty, 1/3 bias 536
Figure 134. 1/4 duty, 1/3 bias 537
Figure 135. 1/8 duty, 1/4 bias 538
Figure 136. LCD voltage control 541
Figure 137. Deadtime 542
Figure 138. SEG/COM mux feature example 547
Figure 139. Flowchart example 548
Figure 140. TSC block diagram 560
Figure 141. Surface charge transfer analog I/O group structure 561
Figure 142. Sampling capacitor voltage variation 562

Figure 143. Charge transfer acquisition sequence . . . 563
Figure 144. Spread spectrum variation principle . . . 564
Figure 145. Block diagram . . . 578
Figure 146. AES block diagram . . . 584
Figure 147. ECB encryption mode . . . 586
Figure 148. ECB decryption mode . . . 587
Figure 149. CBC mode encryption . . . 588
Figure 150. CBC mode decryption . . . 588
Figure 151. Example of suspend mode management . . . 590
Figure 152. CTR mode encryption . . . 591
Figure 153. CTR mode decryption . . . 591
Figure 154. 32-bit counter + nonce organization . . . 592
Figure 155. 128-bit block construction according to the data type . . . 598
Figure 156. 128-bit block construction according to the data type (continued) . . . 599
Figure 157. Mode 1: encryption with 128-bit key length . . . 600
Figure 158. Mode 2: key derivation with 128-bit key length . . . 600
Figure 159. Mode 3: decryption with 128-bit key length . . . 601
Figure 160. Mode 4: key derivation and decryption with 128-bit key length . . . 602
Figure 161. DMA requests and data transfers during Input phase (AES_IN) . . . 603
Figure 162. DMA requests during Output phase (AES_OUT) . . . 603
Figure 163. Advanced-control timer block diagram . . . 620
Figure 164. Counter timing diagram with prescaler division change from 1 to 2 . . . 622
Figure 165. Counter timing diagram with prescaler division change from 1 to 4 . . . 622
Figure 166. Counter timing diagram, internal clock divided by 1 . . . 624
Figure 167. Counter timing diagram, internal clock divided by 2 . . . 624
Figure 168. Counter timing diagram, internal clock divided by 4 . . . 625
Figure 169. Counter timing diagram, internal clock divided by N . . . 625
Figure 170. Counter timing diagram, update event when ARPE=0 (TIMx_ARR not preloaded) . . . 626
Figure 171. Counter timing diagram, update event when ARPE=1 (TIMx_ARR preloaded) . . . 626
Figure 172. Counter timing diagram, internal clock divided by 1 . . . 628
Figure 173. Counter timing diagram, internal clock divided by 2 . . . 628
Figure 174. Counter timing diagram, internal clock divided by 4 . . . 629
Figure 175. Counter timing diagram, internal clock divided by N . . . 629
Figure 176. Counter timing diagram, update event when repetition counter is not used . . . 630
Figure 177. Counter timing diagram, internal clock divided by 1, TIMx_ARR = 0x6 . . . 631
Figure 178. Counter timing diagram, internal clock divided by 2 . . . 632
Figure 179. Counter timing diagram, internal clock divided by 4, TIMx_ARR=0x36 . . . 632
Figure 180. Counter timing diagram, internal clock divided by N . . . 633
Figure 181. Counter timing diagram, update event with ARPE=1 (counter underflow) . . . 633
Figure 182. Counter timing diagram, Update event with ARPE=1 (counter overflow) . . . 634
Figure 183. Update rate examples depending on mode and TIMx_RCR register settings . . . 635
Figure 184. External trigger input block . . . 636
Figure 185. TIM1 ETR input circuitry . . . 636
Figure 186. Control circuit in normal mode, internal clock divided by 1 . . . 637
Figure 187. TI2 external clock connection example . . . 638
Figure 188. Control circuit in external clock mode 1 . . . 639
Figure 189. External trigger input block . . . 639
Figure 190. Control circuit in external clock mode 2 . . . 640
Figure 191. Capture/compare channel (example: channel 1 input stage) . . . 641
Figure 192. Capture/compare channel 1 main circuit . . . 642
Figure 193. Output stage of capture/compare channel (channel 1, idem ch. 2 and 3) . . . 642
Figure 194. Output stage of capture/compare channel (channel 4) . . . 643

Figure 195. Output stage of capture/compare channel (channel 5, idem ch. 6) 643
Figure 196. PWM input mode timing 645
Figure 197. Output compare mode, toggle on OC1 647
Figure 198. Edge-aligned PWM waveforms (ARR=8) 648
Figure 199. Center-aligned PWM waveforms (ARR=8) 649
Figure 200. Generation of 2 phase-shifted PWM signals with 50% duty cycle 651
Figure 201. Combined PWM mode on channel 1 and 3 652
Figure 202. 3-phase combined PWM signals with multiple trigger pulses per period 653
Figure 203. Complementary output with dead-time insertion 654
Figure 204. Dead-time waveforms with delay greater than the negative pulse 654
Figure 205. Dead-time waveforms with delay greater than the positive pulse. 655
Figure 206. Break and Break2 circuitry overview 657
Figure 207. Various output behavior in response to a break event on BRK (OSSI = 1) 659
Figure 208. PWM output state following BRK and BRK2 pins assertion (OSSI=1) 660
Figure 209. PWM output state following BRK assertion (OSSI=0) 661
Figure 210. Output redirection 661
Figure 211. Clearing TIMx OCxREF 662
Figure 212. 6-step generation, COM example (OSSR=1) 663
Figure 213. Example of one pulse mode. 664
Figure 214. Retriggerable one pulse mode 666
Figure 215. Example of counter operation in encoder interface mode. 667
Figure 216. Example of encoder interface mode with TI1FP1 polarity inverted. 668
Figure 217. Measuring time interval between edges on 3 signals 669
Figure 218. Example of Hall sensor interface 671
Figure 219. Control circuit in reset mode 672
Figure 220. Control circuit in Gated mode 673
Figure 221. Control circuit in trigger mode 674
Figure 222. Control circuit in external clock mode 2 + trigger mode 675
Figure 223. General-purpose timer block diagram 717
Figure 224. Counter timing diagram with prescaler division change from 1 to 2 719
Figure 225. Counter timing diagram with prescaler division change from 1 to 4 719
Figure 226. Counter timing diagram, internal clock divided by 1 720
Figure 227. Counter timing diagram, internal clock divided by 2 721
Figure 228. Counter timing diagram, internal clock divided by 4 721
Figure 229. Counter timing diagram, internal clock divided by N. 722
Figure 230. Counter timing diagram, Update event when ARPE=0 (TIMx_ARR not preloaded). 722
Figure 231. Counter timing diagram, Update event when ARPE=1 (TIMx_ARR preloaded). 723
Figure 232. Counter timing diagram, internal clock divided by 1 724
Figure 233. Counter timing diagram, internal clock divided by 2 724
Figure 234. Counter timing diagram, internal clock divided by 4 725
Figure 235. Counter timing diagram, internal clock divided by N. 725
Figure 236. Counter timing diagram, Update event when repetition counter is not used 726
Figure 237. Counter timing diagram, internal clock divided by 1, TIMx_ARR=0x6 727
Figure 238. Counter timing diagram, internal clock divided by 2 728
Figure 239. Counter timing diagram, internal clock divided by 4, TIMx_ARR=0x36 728
Figure 240. Counter timing diagram, internal clock divided by N. 729
Figure 241. Counter timing diagram, Update event with ARPE=1 (counter underflow). 729
Figure 242. Counter timing diagram, Update event with ARPE=1 (counter overflow). 730
Figure 243. Control circuit in normal mode, internal clock divided by 1 731
Figure 244. TI2 external clock connection example. 731
Figure 245. Control circuit in external clock mode 1 732

Figure 246. External trigger input block . . . 733
Figure 247. Control circuit in external clock mode 2 . . . 734
Figure 248. Capture/compare channel (example: channel 1 input stage) . . . 735
Figure 249. Capture/compare channel 1 main circuit . . . 735
Figure 250. Output stage of capture/compare channel (channel 1). . . . 736
Figure 251. PWM input mode timing . . . 738
Figure 252. Output compare mode, toggle on OC1 . . . 740
Figure 253. Edge-aligned PWM waveforms (ARR=8) . . . 741
Figure 254. Center-aligned PWM waveforms (ARR=8) . . . 743
Figure 255. Generation of 2 phase-shifted PWM signals with 50% duty cycle . . . 744
Figure 256. Combined PWM mode on channels 1 and 3 . . . 745
Figure 257. Clearing TIMx OCxREF . . . 746
Figure 258. Example of one-pulse mode. . . . 747
Figure 259. Retriggerable one pulse mode . . . 749
Figure 260. Example of counter operation in encoder interface mode . . . 750
Figure 261. Example of encoder interface mode with TI1FP1 polarity inverted . . . 751
Figure 262. Control circuit in reset mode . . . 752
Figure 263. Control circuit in gated mode . . . 753
Figure 264. Control circuit in trigger mode . . . 754
Figure 265. Control circuit in external clock mode 2 + trigger mode . . . 755
Figure 266. Master/Slave timer example . . . 755
Figure 267. Gating TIMz with OC1REF of TIMy . . . 756
Figure 268. Gating TIMz with Enable of TIMy . . . 757
Figure 269. Triggering TIMz with update of TIMy . . . 758
Figure 270. Triggering TIMz with Enable of TIMy . . . 758
Figure 271. Triggering TIMy and TIMz with TIMy TI1 input . . . 759
Figure 272. TIM15 block diagram . . . 788
Figure 273. TIM16 block diagram . . . 789
Figure 274. Counter timing diagram with prescaler division change from 1 to 2 . . . 791
Figure 275. Counter timing diagram with prescaler division change from 1 to 4 . . . 791
Figure 276. Counter timing diagram, internal clock divided by 1 . . . 793
Figure 277. Counter timing diagram, internal clock divided by 2 . . . 793
Figure 278. Counter timing diagram, internal clock divided by 4 . . . 794
Figure 279. Counter timing diagram, internal clock divided by N. . . . 794
Figure 280. Counter timing diagram, update event when ARPE=0 (TIMx_ARR not preloaded). . . . 795
Figure 281. Counter timing diagram, update event when ARPE=1 (TIMx_ARR preloaded). . . . 795
Figure 282. Update rate examples depending on mode and TIMx_RCR register settings . . . 797
Figure 283. Control circuit in normal mode, internal clock divided by 1 . . . 798
Figure 284. TI2 external clock connection example. . . . 798
Figure 285. Control circuit in external clock mode 1 . . . 799
Figure 286. Capture/compare channel (example: channel 1 input stage) . . . 800
Figure 287. Capture/compare channel 1 main circuit . . . 800
Figure 288. Output stage of capture/compare channel (channel 1). . . . 801
Figure 289. Output stage of capture/compare channel (channel 2 for TIM15) . . . 801
Figure 290. PWM input mode timing . . . 803
Figure 291. Output compare mode, toggle on OC1 . . . 805
Figure 292. Edge-aligned PWM waveforms (ARR=8) . . . 806
Figure 293. Combined PWM mode on channel 1 and 2 . . . 807
Figure 294. Complementary output with dead-time insertion. . . . 808
Figure 295. Dead-time waveforms with delay greater than the negative pulse. . . . 809

Figure 296. Dead-time waveforms with delay greater than the positive pulse. 809
Figure 297. Break circuitry overview 811
Figure 298. Output behavior in response to a break 813
Figure 299. Example of one pulse mode. 814
Figure 300. Measuring time interval between edges on 2 signals 816
Figure 301. Control circuit in reset mode 817
Figure 302. Control circuit in gated mode 818
Figure 303. Control circuit in trigger mode 819
Figure 304. Basic timer block diagram. 865
Figure 305. Counter timing diagram with prescaler division change from 1 to 2 867
Figure 306. Counter timing diagram with prescaler division change from 1 to 4 867
Figure 307. Counter timing diagram, internal clock divided by 1 868
Figure 308. Counter timing diagram, internal clock divided by 2 869
Figure 309. Counter timing diagram, internal clock divided by 4 869
Figure 310. Counter timing diagram, internal clock divided by N. 870
Figure 311. Counter timing diagram, update event when ARPE = 0 (TIMx_ARR not preloaded). 870
Figure 312. Counter timing diagram, update event when ARPE=1 (TIMx_ARR preloaded). 871
Figure 313. Control circuit in normal mode, internal clock divided by 1 872
Figure 314. Low-power timer block diagram 879
Figure 315. Glitch filter timing diagram 880
Figure 316. LPTIM output waveform, Single counting mode configuration 882
Figure 317. LPTIM output waveform, Single counting mode configuration and Set-once mode activated (WAVE bit is set). 882
Figure 318. LPTIM output waveform, Continuous counting mode configuration 883
Figure 319. Waveform generation 885
Figure 320. Encoder mode counting sequence 888
Figure 321. IR internal hardware connections with TIM15 and TIM16 901
Figure 322. Independent watchdog block diagram 902
Figure 323. Watchdog block diagram 912
Figure 324. Window watchdog timing diagram 913
Figure 325. RTC block diagram 920
Figure 326. I2C block diagram 965
Figure 327. I2C bus protocol 967
Figure 328. Setup and hold timings 969
Figure 329. I2C initialization flowchart 972
Figure 330. Data reception 973
Figure 331. Data transmission 974
Figure 332. Slave initialization flowchart 978
Figure 333. Transfer sequence flowchart for I2C slave transmitter, NOSTRETCH=0. 979
Figure 334. Transfer sequence flowchart for I2C slave transmitter, NOSTRETCH=1. 980
Figure 335. Transfer bus diagrams for I2C slave transmitter. 981
Figure 336. Transfer sequence flowchart for slave receiver with NOSTRETCH=0 982
Figure 337. Transfer sequence flowchart for slave receiver with NOSTRETCH=1 983
Figure 338. Transfer bus diagrams for I2C slave receiver. 983
Figure 339. Master clock generation 985
Figure 340. Master initialization flowchart 987
Figure 341. 10-bit address read access with HEAD10R=0 987
Figure 342. 10-bit address read access with HEAD10R=1 988
Figure 343. Transfer sequence flowchart for I2C master transmitter for N≤255 bytes 989
Figure 344. Transfer sequence flowchart for I2C master transmitter for N>255 bytes 990

Figure 345. Transfer bus diagrams for I2C master transmitter . . . 991
Figure 346. Transfer sequence flowchart for I2C master receiver for N≤255 bytes. . . . 993
Figure 347. Transfer sequence flowchart for I2C master receiver for N >255 bytes . . . 994
Figure 348. Transfer bus diagrams for I2C master receiver . . . 995
Figure 349. Timeout intervals for $t_{LOW:SEXT}$, $t_{LOW:MEXT}$. . . . 1000
Figure 350. Transfer sequence flowchart for SMBus slave transmitter N bytes + PEC. . . . 1004
Figure 351. Transfer bus diagrams for SMBus slave transmitter (SBC=1) . . . 1004
Figure 352. Transfer sequence flowchart for SMBus slave receiver N Bytes + PEC . . . 1006
Figure 353. Bus transfer diagrams for SMBus slave receiver (SBC=1) . . . 1007
Figure 354. Bus transfer diagrams for SMBus master transmitter. . . . 1008
Figure 355. Bus transfer diagrams for SMBus master receiver . . . 1010
Figure 356. I2C interrupt mapping diagram . . . 1016
Figure 357. USART block diagram . . . 1037
Figure 358. Word length programming . . . 1039
Figure 359. Configurable stop bits . . . 1041
Figure 360. TC/TXE behavior when transmitting . . . 1042
Figure 361. Start bit detection when oversampling by 16 or 8 . . . 1043
Figure 362. Data sampling when oversampling by 16 . . . 1047
Figure 363. Data sampling when oversampling by 8 . . . 1047
Figure 364. Mute mode using Idle line detection . . . 1054
Figure 365. Mute mode using address mark detection . . . 1055
Figure 366. Break detection in LIN mode (11-bit break length - LBDL bit is set). . . . 1058
Figure 367. Break detection in LIN mode vs. Framing error detection. . . . 1059
Figure 368. USART example of synchronous transmission. . . . 1060
Figure 369. USART data clock timing diagram (M bits = 00). . . . 1060
Figure 370. USART data clock timing diagram (M bits = 01) . . . 1061
Figure 371. RX data setup/hold time . . . 1061
Figure 372. ISO 7816-3 asynchronous protocol . . . 1063
Figure 373. Parity error detection using the 1.5 stop bits . . . 1064
Figure 374. IrDA SIR ENDEC- block diagram . . . 1068
Figure 375. IrDA data modulation (3/16) -Normal Mode . . . 1069
Figure 376. Transmission using DMA . . . 1070
Figure 377. Reception using DMA . . . 1071
Figure 378. Hardware flow control between 2 USARTs . . . 1071
Figure 379. RS232 RTS flow control . . . 1072
Figure 380. RS232 CTS flow control . . . 1073
Figure 381. USART interrupt mapping diagram . . . 1076
Figure 382. LPUART Block diagram . . . 1104
Figure 383. Word length programming . . . 1106
Figure 384. Configurable stop bits . . . 1107
Figure 385. TC/TXE behavior when transmitting . . . 1109
Figure 386. Mute mode using Idle line detection . . . 1116
Figure 387. Mute mode using address mark detection . . . 1117
Figure 388. Transmission using DMA . . . 1120
Figure 389. Reception using DMA . . . 1121
Figure 390. Hardware flow control between 2 LPUARTs . . . 1121
Figure 391. RS232 RTS flow control . . . 1122
Figure 392. RS232 CTS flow control . . . 1123
Figure 393. LPUART interrupt mapping diagram . . . 1127
Figure 394. SPI block diagram. . . . 1144
Figure 395. Full-duplex single master/ single slave application. . . . 1145
Figure 396. Half-duplex single master/ single slave application . . . 1146

Figure 397. Simplex single master/single slave application (master in transmit-only/ slave in receive-only mode) . . . 1147
Figure 398. Master and three independent slaves . . . 1148
Figure 399. Multi-master application . . . 1149
Figure 400. Hardware/software slave select management . . . 1150
Figure 401. Data clock timing diagram . . . 1151
Figure 402. Data alignment when data length is not equal to 8-bit or 16-bit . . . 1152
Figure 403. Packing data in FIFO for transmission and reception . . . 1156
Figure 404. Master full duplex communication . . . 1159
Figure 405. Slave full duplex communication . . . 1160
Figure 406. Master full duplex communication with CRC . . . 1161
Figure 407. Master full duplex communication in packed mode . . . 1162
Figure 408. NSSP pulse generation in Motorola SPI master mode . . . 1165
Figure 409. TI mode transfer . . . 1166
Figure 410. Functional block diagram . . . 1179
Figure 411. Audio frame . . . 1182
Figure 412. FS role is start of frame + channel side identification (FSDEF = TRIS = 1) . . . 1184
Figure 413. FS role is start of frame (FSDEF = 0) . . . 1185
Figure 414. Slot size configuration with FBOFF = 0 in SAI_xSLOTR . . . 1186
Figure 415. First bit offset . . . 1186
Figure 416. Audio block clock generator overview . . . 1187
Figure 417. AC’97 audio frame . . . 1191
Figure 418. SPDIF format . . . 1192
Figure 419. SAI_xDR register ordering . . . 1193
Figure 420. Data companding hardware in an audio block in the SAI . . . 1196
Figure 421. Tristate strategy on SD output line on an inactive slot . . . 1198
Figure 422. Tristate on output data line in a protocol like I2S . . . 1199
Figure 423. Overrun detection error . . . 1200
Figure 424. FIFO underrun event . . . 1200
Figure 425. S1 signal coding . . . 1219
Figure 426. S2 signal coding . . . 1219
Figure 427. SWPMI block diagram . . . 1221
Figure 428. SWP bus states . . . 1223
Figure 429. SWP frame structure . . . 1224
Figure 430. SWPMI No software buffer mode transmission . . . 1225
Figure 431. SWPMI No software buffer mode transmission, consecutive frames . . . 1226
Figure 432. SWPMI Multi software buffer mode transmission . . . 1228
Figure 433. SWPMI No software buffer mode reception . . . 1230
Figure 434. SWPMI single software buffer mode reception . . . 1231
Figure 435. SWPMI Multi software buffer mode reception . . . 1233
Figure 436. SWPMI single buffer mode reception with CRC error . . . 1234
Figure 437. “No response” and “no data” operations . . . 1250
Figure 438. (Multiple) block read operation . . . 1250
Figure 439. (Multiple) block write operation . . . 1250
Figure 440. Sequential read operation . . . 1251
Figure 441. Sequential write operation . . . 1251
Figure 442. SDMMC block diagram . . . 1251
Figure 443. SDMMC adapter . . . 1253
Figure 444. Control unit . . . 1254
Figure 445. SDMMC_CK clock dephasing (BYPASS = 0) . . . 1255
Figure 446. SDMMC adapter command path . . . 1255
Figure 447. Command path state machine (SDMMC) . . . 1256

Figure 448. SDMMC command transfer 1257
Figure 449. Data path 1259
Figure 450. Data path state machine (DPSM) 1260
Figure 451. CAN network topology 1308
Figure 452. bxCAN operating modes 1311
Figure 453. bxCAN in silent mode 1312
Figure 454. bxCAN in loop back mode 1312
Figure 455. bxCAN in combined mode 1313
Figure 456. Transmit mailbox states 1314
Figure 457. Receive FIFO states 1315
Figure 458. Filter bank scale configuration - register organization 1318
Figure 459. Example of filter numbering 1319
Figure 460. Filtering mechanism - example 1320
Figure 461. CAN error state diagram 1321
Figure 462. Bit timing 1323
Figure 463. CAN frames 1324
Figure 464. Event flags and interrupt generation 1325
Figure 465. Can mailbox registers 1337
Figure 466. USB peripheral block diagram 1352
Figure 467. Packet buffer areas with examples of buffer description table locations 1356
Figure 468. Block diagram of STM32 MCU and Cortex®-M4-level debug support 1384
Figure 469. SWJ debug port 1386
Figure 470. JTAG TAP connections 1390
Figure 471. TPIU block diagram 1408

1 Documentation conventions

1.1 List of abbreviations for registers

The following abbreviations are used in register descriptions:

read/write (rw)	Software can read and write to this bit.
read-only (r)	Software can only read this bit.
write-only (w)	Software can only write to this bit. Reading this bit returns the reset value.
read/clear (rc_w1)	Software can read as well as clear this bit by writing 1. Writing ‘0’ has no effect on the bit value.
read/clear (rc_w0)	Software can read as well as clear this bit by writing 0. Writing ‘1’ has no effect on the bit value.
read/clear by read (rc_r)	Software can read this bit. Reading this bit automatically clears it to ‘0’. Writing ‘0’ has no effect on the bit value.
read/set (rs)	Software can read as well as set this bit. Writing ‘0’ has no effect on the bit value.
Reserved (Res.)	Reserved bit, must be kept at reset value.

1.2 Glossary

This section gives a brief definition of acronyms and abbreviations used in this document:

- **Word**: data of 32-bit length.
- **Half-word**: data of 16-bit length.
- **Byte**: data of 8-bit length.
- **IAP (in-application programming)**: IAP is the ability to re-program the Flash memory of a microcontroller while the user program is running.
- **ICP (in-circuit programming)**: ICP is the ability to program the Flash memory of a microcontroller using the JTAG protocol, the SWD protocol or the bootloader while the device is mounted on the user application board.
- **Option bytes**: product configuration bits stored in the Flash memory.
- **OBL**: option byte loader.
- **AHB**: advanced high-performance bus.
- **APB**: advanced peripheral bus.

1.3 Peripheral availability

For peripheral availability and number across all sales types, please refer to the particular device datasheet.

1.4 Product specific features

Table 1. Product specific features

Feature	STM32L431xx	STM32L433xx	STM32L443xx
LCD	-	full-featured	full-featured
AES	-	-	full-featured
USB	-	full-featured	full-featured

2 System and memory overview

2.1 System architecture

The main system consists of 32-bit multilayer AHB bus matrix that interconnects:

- Five masters:
  - Cortex®-M4 with FPU core I-bus
  - Cortex®-M4 with FPU core D-bus
  - Cortex®-M4 with FPU core S-bus
  - DMA1
  - DMA2
- Seven slaves:
  - Internal Flash memory on the ICode bus
  - Internal Flash memory on DCode bus
  - Internal SRAM1 (48 KB)
  - Internal SRAM2 (16 KB)
  - AHB1 peripherals including AHB to APB bridges and APB peripherals (connected to APB1 and APB2)
  - AHB2 peripherals
  - The external memory controller (QUADSPI).

The bus matrix provides access from a master to a slave, enabling concurrent access and efficient operation even when several high-speed peripherals work simultaneously. This architecture is shown in *Figure 1*:

Figure 1. System architecture

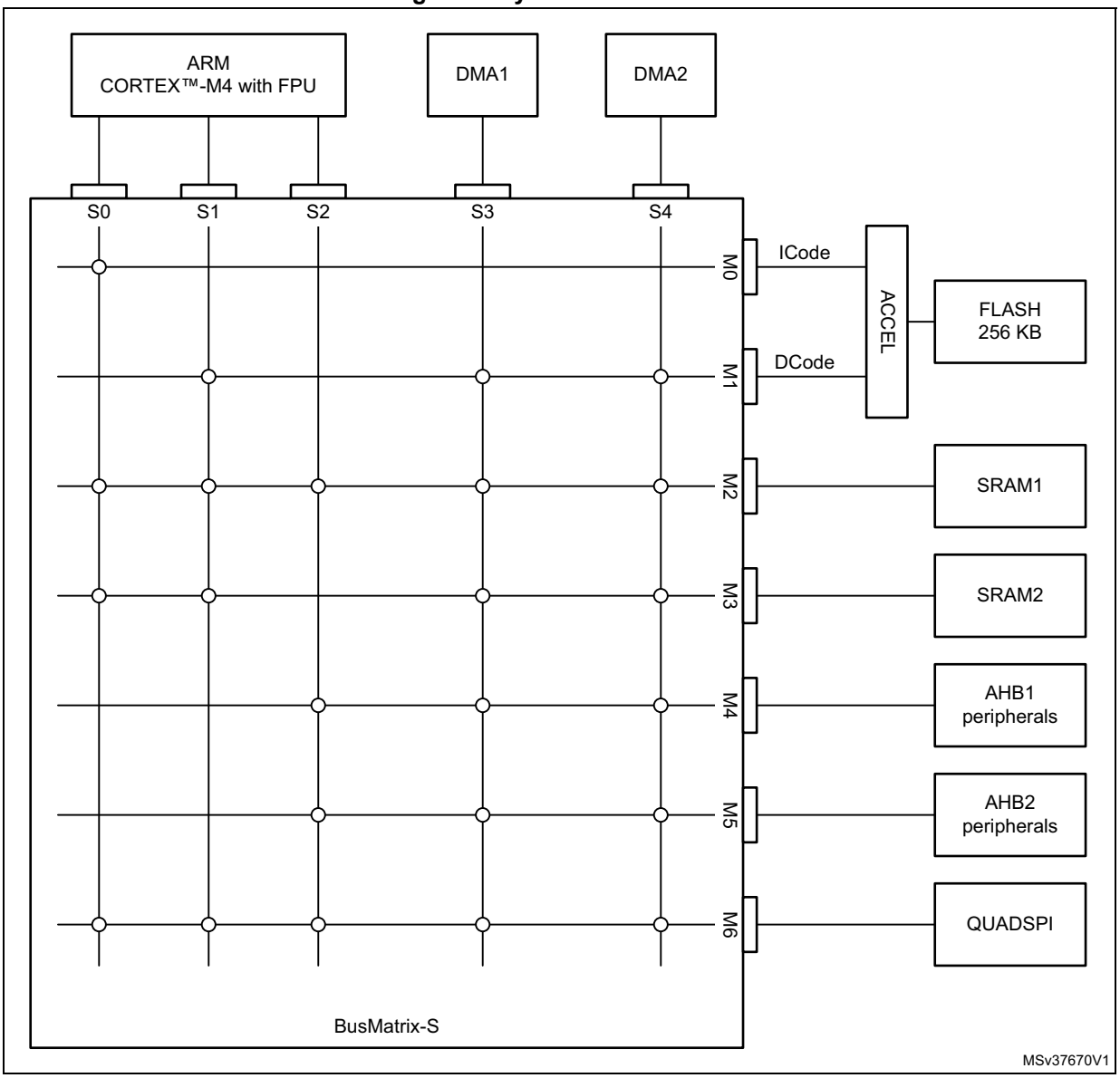

2.1.1 S0: I-bus

This bus connects the instruction bus of the Cortex®-M4 core to the BusMatrix. This bus is used by the core to fetch instructions. The targets of this bus are the internal Flash memory, SRAM1, SRAM2 and external memories through QUADSPI.

2.1.2 S1: D-bus

This bus connects the data bus of the Cortex®-M4 core to the BusMatrix. This bus is used by the core for literal load and debug access. The targets of this bus are the internal Flash memory, SRAM1, SRAM2 and external memories through QUADSPI.

2.1.3 S2: S-bus

This bus connects the system bus of the Cortex®-M4 core to the BusMatrix. This bus is used by the core to access data located in a peripheral or SRAM area. The targets of this bus are the SRAM1, the AHB1 peripherals including the APB1 and APB2 peripherals, the AHB2 peripherals and the external memories through the QUADSPI.

2.1.4 S3, S4: DMA-bus

This bus connects the AHB master interface of the DMA to the BusMatrix.The targets of this bus are the SRAM1 and SRAM2, the AHB1 peripherals including the APB1 and APB2 peripherals, the AHB2 peripherals and the external memories through the QUADSPI.

2.1.5 BusMatrix

The BusMatrix manages the access arbitration between masters. The arbitration uses a Round Robin algorithm. The BusMatrix is composedof five masters (CPU AHB, system bus, DCode bus, ICode bus, DMA1 and DMA2 bus) and seven slaves (FLASH, SRAM1, SRAM2, AHB1 (including APB1 and APB2), AHB2 and QUADSPI).

AHB/APB bridges

The two AHB/APB bridges provide full synchronous connections between the AHB and the two APB buses, allowing flexible selection of the peripheral frequency.

Refer to *Section 2.2.2: Memory map and register boundary addresses on page 62* for the address mapping of the peripherals connected to this bridge.

After each device reset, all peripheral clocks are disabled (except for the SRAM1/2 and Flash memory interface). Before using a peripheral you have to enable its clock in the RCC_AHBxENR and the RCC_APBxENR registers.

Note: When a 16- or 8-bit access is performed on an APB register, the access is transformed into a 32-bit access: the bridge duplicates the 16- or 8-bit data to feed the 32-bit vector.

2.2 Memory organization

2.2.1 Introduction

Program memory, data memory, registers and I/O ports are organized within the same linear 4-Gbyte address space.

The bytes are coded in memory in Little Endian format. The lowest numbered byte in a word is considered the word's least significant byte and the highest numbered byte the most significant.

The addressable memory space is divided into 8 main blocks, of 512 Mbytes each.

Figure 2. Memory map

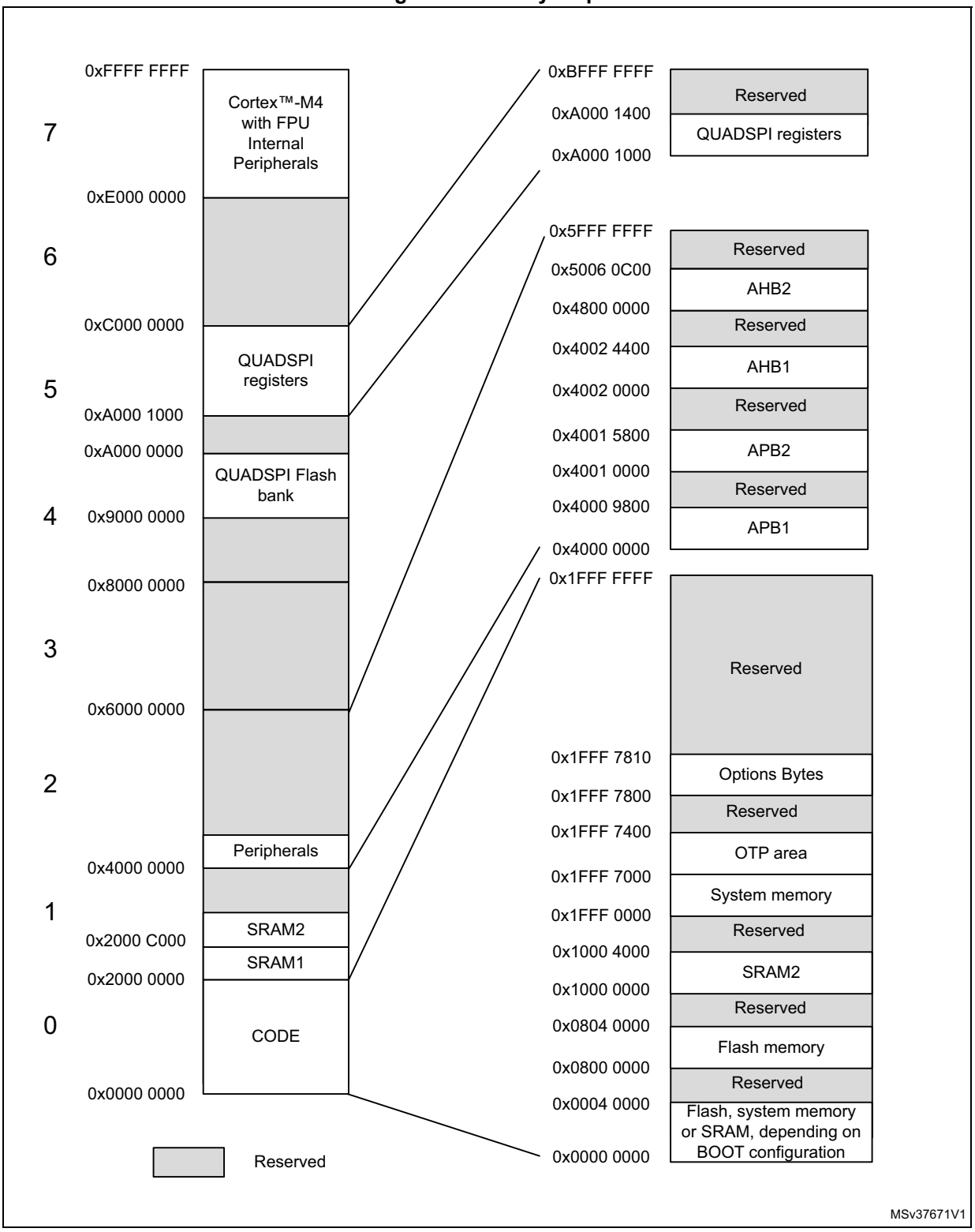

It is forbidden to access QUADSPI Flash bank area before having properly configured and enabled the QUADSPI peripheral.

All the memory areas that are not allocated to on-chip memories and peripherals are considered “Reserved”. For the detailed mapping of available memory and register areas, please refer to *Memory map and register boundary addresses* and peripheral sections.

2.2.2 Memory map and register boundary addresses

See the datasheet corresponding to your device for a comprehensive diagram of the memory map.

The following table gives the boundary addresses of the peripherals available in the devices.

Table 2. STM32L431/433/443 memory map and peripheral register boundary addresses

Bus	Boundary address	Size (bytes)	Peripheral	Peripheral register map
AHB2	0x5006 0800 - 0x5006 0BFF	1 KB	RNG	*Section 23.4.4: RNG register map*
	0x5006 0400 - 0x5006 07FF	1 KB	Reserved	-
	0x5006 0000 - 0x5006 03FF	1 KB	AES(1)	*Section 24.14.18: AES register map*
	0x5004 0400 - 0x5005 FFFF	127 KB	Reserved	-
	0x5004 0000 - 0x5004 03FF	1 KB	ADC	*Section 16.7.4: ADC register map*
	0x5000 0000 - 0x5003 FFFF	16 KB	Reserved	-
	0x4800 2000 - 0x4FFF FFFF	~127 MB	Reserved	-
	0x4800 1C00 - 0x4800 1FFF	1 KB	GPIOH	*Section 8.4.12: GPIO register map*
	0x4800 1800 - 0x4800 1BFF	1 KB	Reserved	-
	0x4800 1400 - 0x4800 17FF	1 KB	Reserved	-
	0x4800 1000 - 0x4800 13FF	1 KB	GPIOE	*Section 8.4.12: GPIO register map*
	0x4800 0C00 - 0x4800 0FFF	1 KB	GPIOD	*Section 8.4.12: GPIO register map*
	0x4800 0800 - 0x4800 0BFF	1 KB	GPIOC	*Section 8.4.12: GPIO register map*
	0x4800 0400 - 0x4800 07FF	1 KB	GPIOB	*Section 8.4.12: GPIO register map*
	0x4800 0000 - 0x4800 03FF	1 KB	GPIOA	*Section 8.4.12: GPIO register map*
	0x4002 4400 - 0x47FF FFFF	~127 MB	Reserved	-

Table 2. STM32L431/433/443 memory map and peripheral register boundary addresses (continued)

Bus	Boundary address	Size (bytes)	Peripheral	Peripheral register map
AHB1	0x4002 4000 - 0x4002 43FF	1 KB	TSC	*Section 22.6.11: TSC register map*
	0x4002 3400 - 0x4002 3FFF	1 KB	Reserved	-
	0x4002 3000 - 0x4002 33FF	1 KB	CRC	*Section 14.4.6: CRC register map*
	0x4002 2400 - 0x4002 2FFF	3 KB	Reserved	-
	0x4002 2000 - 0x4002 23FF	1 KB	FLASH registers	*Section 3.7.13: FLASH register map*
	0x4002 1400 - 0x4002 1FFF	3 KB	Reserved	-
	0x4002 1000 - 0x4002 13FF	1 KB	RCC	*Section 6.4.31: RCC register map*
	0x4002 0800 - 0x4002 0FFF	2 KB	Reserved	-
	0x4002 0400 - 0x4002 07FF	1 KB	DMA2	*Section 11.5.9: DMA register map*
	0x4002 0000 - 0x4002 03FF	1 KB	DMA1	*Section 11.5.9: DMA register map*
APB2	0x4001 5800 - 0x4001 FFFF	42 KB	Reserved	-
	0x4001 5400 - 0x4001 57FF	1 KB	SAI1	*Section 38.6.10: SAI register map*
	0x4001 4400 - 0x4000 53FF	2 KB	Reserved	-
	0x4001 4400 - 0x4001 47FF	1 KB	TIM16	*Section 27.6.18: TIM16 register map*
	0x4001 4000 - 0x4001 43FF	1 KB	TIM15	*Section 27.5.20: TIM15 register map*
	0x4001 3C00 - 0x4001 3FFF	1 KB	Reserved	-
	0x4001 3800 - 0x4001 3BFF	1 KB	USART1	*Section 35.8.12: USART register map*
	0x4001 3400 - 0x4001 37FF	1 KB	Reserved	-
	0x4001 3000 - 0x4001 33FF	1 KB	SPI1	*Section 37.6.8: SPI register map*
	0x4001 2C00 - 0x4001 2FFF	1 KB	TIM1	*Section 25.4.27: TIM1 register map*
	0x4001 2800 - 0x4001 2BFF	1 KB	SDMMC	*Section 40.8.16: SDMMC register map*
	0x4001 2000 - 0x4001 27FF	2 KB	Reserved	-
	0x4001 1C00 - 0x4001 1FFF	1 KB	FIREWALL	*Section 4.4.8: Firewall register map*
	0x4001 0800- 0x4001 1BFF	5 KB	Reserved	-
	0x4001 0400 - 0x4001 07FF	1 KB	EXTI	*Section 13.5.13: EXTI register map*

Table 2. STM32L431/433/443 memory map and peripheral register boundary addresses (continued)

Bus	Boundary address	Size (bytes)	Peripheral	Peripheral register map
APB2	0x4001 0200 - 0x4001 03FF	1 KB	COMP	*Section 19.6.3: COMP register map*
	0x4001 0030 - 0x4001 01FF		VREFBUF	*Section 18.3.3: VREFBUF register map*
	0x4001 0000 - 0x4001 002F		SYSCFG	*Section 9.2.11: SYSCFG register map*
APB1	0x4000 9800 - 0x4000 FFFF	26 KB	Reserved	-
	0x4000 9400 - 0x4000 97FF	1 KB	LPTIM2	*Section 29.7.11: LPTIM register map*
	0x4000 8C00 - 0x4000 93FF	2 KB	Reserved	-
	0x4000 8800 - 0x4000 8BFF	1 KB	SWPMI1	*Section 39.6.10: SWPMI register map and reset value table*
	0x4000 8400 - 0x4000 87FF	1 KB	Reserved	-
	0x4000 8000 - 0x4000 83FF	1 KB	LPUART1	*Section 36.7.10: LPUART register map*
	0x4000 7C00 - 0x4000 7FFF	1 KB	LPTIM1	*Section 29.7.11: LPTIM register map*
	0x4000 7800 - 0x4000 7BFF	1 KB	OPAMP	*Section 20.5.4: OPAMP register map*
	0x4000 7400 - 0x4000 77FF	1 KB	DAC1	*Section 17.5.21: DAC register map*
	0x4000 7000 - 0x4000 73FF	1 KB	PWR	*Section 5.4.20: PWR register map and reset value table*
	0x4000 6C00 - 0x4000 6FFF	1 KB	USB SRAM(2)	*Section 42.6.3: USB register map*
	0x4000 6800 - 0x4000 6BFF	1 KB	USB FS(2)	
	0x4000 6400 - 0x4000 67FF	1 KB	CAN1	*Section 41.9.5: bxCAN register map*
	0x4000 6000 - 0x4000 63FF	1 KB	CRS	*Section 7.6.5: CRS register map*
	0x4000 5C00- 0x4000 5FFF	1 KB	I2C3	*Section 34.7.12: I2C register map*
	0x4000 5800 - 0x4000 5BFF	1 KB	I2C2	*Section 34.7.12: I2C register map*
	0x4000 5400 - 0x4000 57FF	1 KB	I2C1	*Section 34.7.12: I2C register map*
	0x4000 4C00 - 0x4000 53FF	2 KB	Reserved	-
	0x4000 4800 - 0x4000 4BFF	1 KB	USART3	*Section 35.8.12: USART register map*

Table 2. STM32L431/433/443 memory map and peripheral register boundary addresses (continued)

Bus	Boundary address	Size (bytes)	Peripheral	Peripheral register map
APB1	0x4000 4400 - 0x4000 47FF	1 KB	USART2	*Section 35.8.12: USART register map*
	0x4000 4000 - 0x4000 43FF	1 KB	Reserved	-
	0x4000 3C00 - 0x4000 3FFF	1 KB	SPI3	*Section 37.6.8: SPI register map*
	0x4000 3800 - 0x4000 3BFF	1 KB	SPI2	*Section 37.6.8: SPI register map*
	0x4000 3400 - 0x4000 37FF	1 KB	Reserved	-
	0x4000 3000 - 0x4000 33FF	1 KB	IWDG	*Section 31.4.6: IWDG register map*
	0x4000 2C00 - 0x4000 2FFF	1 KB	WWDG	*Section 32.4.4: WWDG register map*
	0x4000 2800 - 0x4000 2BFF	1 KB	RTC	*Section 33.6.21: RTC register map*
	0x4000 2400 - 0x4000 27FF	1 KB	LCD(2)	*Section 21.6.6: LCD register map*
	0x4000 1800 - 0x4000 2400	3 KB	Reserved	-
	0x4000 1400 - 0x4000 17FF	1 KB	TIM7	*Section 28.4.9: TIM6/TIM7 register map*
	0x4000 1000 - 0x4000 13FF	1 KB	TIM6	*Section 28.4.9: TIM6/TIM7 register map*
	0x4000 0400- 0x4000 0FFF	3 KB	Reserved	-
	0x4000 0000 - 0x4000 03FF	1 KB	TIM2	*Section 26.4.21: TIMx register map*

1. Not available for STM32L431xx and STM32L433xx devices.
2. Not available for STM32L431xx devices.

2.3 Bit banding

The Cortex®-M4 memory map includes two bit-band regions. These regions map each word in an alias region of memory to a bit in a bit-band region of memory. Writing to a word in the alias region has the same effect as a read-modify-write operation on the targeted bit in the bit-band region.

In the STM32L431/433/443 devices both the peripheral registers and the SRAM1 are mapped to a bit-band region, so that single bit-band write and read operations are allowed. The operations are only available for Cortex®-M4 accesses, and not from other bus masters (e.g. DMA).

A mapping formula shows how to reference each word in the alias region to a corresponding bit in the bit-band region. The mapping formula is:

bit_word_addr = *bit_band_base* + (*byte_offset* x 32) + (*bit_number* × 4)

where:

– *bit_word_addr* is the address of the word in the alias memory region that maps to the targeted bit
– *bit_band_base* is the starting address of the alias region
– *byte_offset* is the number of the byte in the bit-band region that contains the targeted bit
– *bit_number* is the bit position (0-7) of the targeted bit

Example

The following example shows how to map bit 2 of the byte located at SRAM1 address 0x20000300 to the alias region:

0x22006008 = 0x22000000 + (0x300*32) + (2*4)

Writing to address 0x22006008 has the same effect as a read-modify-write operation on bit 2 of the byte at SRAM1 address 0x20000300.

Reading address 0x22006008 returns the value (0x01 or 0x00) of bit 2 of the byte at SRAM1 address 0x20000300 (0x01: bit set; 0x00: bit reset).

For more information on bit-banding, please refer to the *Cortex*®-M4 *programming manual* (see *Related documents on page 1*).

2.4 Embedded SRAM

The STM32L431/433/443 devices feature up to 64 Kbyte SRAM:

- Up to 48 Kbyte SRAM1.
- 16 Kbyte SRAM2.

These SRAM can be accessed as bytes, half-words (16 bits) or full words (32 bits). These memories can be addressed at maximum system clock frequency without wait state and thus by both CPU and DMA.

The CPU can access the SRAM1 through the system bus or through the ICode/DCode buses when boot from SRAM1 is selected or when physical remap is selected (*Section 9.2.1: SYSCFG memory remap register (SYSCFG_MEMRMP)* in the SYSCFG controller). To get the maximum performance on SRAM1 execution, physical remap should be selected (boot or software selection).

Execution can be performed from SRAM2 with maximum performance without any remap thanks to access through ICode bus.

2.4.1 SRAM2 Parity check

The user can enable the SRAM2 parity check using the option bit SRAM2_PE in the user option byte (refer to *Section 3.4.1: Option bytes description*).

The data bus width is 36 bits because 4 bits are available for parity check (1 bit per byte) in order to increase memory robustness, as required for instance by Class B or SIL norms.

The parity bits are computed and stored when writing into the SRAM2. Then, they are automatically checked when reading. If one bit fails, an NMI is generated. The same error can also be linked to the BRK_IN Break input of TIM1/TIM15/TIM16, with the SPL control bit in the *SYSCFG configuration register 2 (SYSCFG_CFGR2)*. The SRAM2 Parity Error flag (SPF) is available in the *SYSCFG configuration register 2 (SYSCFG_CFGR2)*.

Note: When enabling the RAM parity check, it is advised to initialize by software the whole RAM memory at the beginning of the code, to avoid getting parity errors when reading non-initialized locations.

2.4.2 SRAM2 Write protection

The SRAM2 can be write protected with a page granularity of 1 Kbyte.

Table 3. SRAM2 organization

Page number	Start address	End address
Page 0	0x1000 0000	0x1000 03FF
Page 1	0x1000 0400	0x1000 07FF
Page 2	0x1000 0800	0x1000 0BFF
Page 3	0x1000 0C00	0x1000 0FFF
Page 4	0x1000 1000	0x1000 13FF
Page 5	0x1000 1400	0x1000 17FF
Page 6	0x1000 1800	0x1000 1BFF
Page 7	0x1000 1C00	0x1000 1FFF
Page 8	0x1000 2000	0x1000 23FF
Page 9	0x1000 2400	0x1000 27FF
Page 10	0x1000 2800	0x1000 2BFF
Page 11	0x1000 2C00	0x1000 2FFF
Page 12	0x1000 3000	0x1000 33FF
Page 13	0x1000 3400	0x1000 37FF
Page 14	0x1000 3800	0x1000 3BFF
Page 15	0x1000 3C00	0x1000 3FFF

The write protection can be enabled in *SYSCFG SRAM2 write protection register (SYSCFG_SWPR)* in the SYSCFG block. This is a register with write ‘1’ once mechanism, which means by writing ‘1’ on a bit it will setup the write protection for that page of SRAM and it can be removed/cleared by a system reset only.

2.4.3 SRAM2 Read protection

The SRAM2 is protected with the Read protection (RDP). Refer to *Section 3.5.1: Read protection (RDP)* for more details.

2.4.4 SRAM2 Erase

The SRAM2 can be erased with a system reset using the option bit SRAM2_RST in the user option byte (refer to *Section 3.4.1: Option bytes description*).

The SRAM2 erase can also be requested by software by setting the bit SRAM2ER in the *SYSCFG SRAM2 control and status register (SYSCFG_SCSR)*.

2.5 Flash memory overview

The Flash memory is composed of two distinct physical areas:

- The main Flash memory block. It contains the application program and user data if necessary.
- The information block. It is composed of three parts:
  - Option bytes for hardware and memory protection user configuration.
  - System memory that contains the proprietary boot loader code.
  - OTP (one-time programmable) area

The Flash interface implements instruction access and data access based on the AHB protocol. It implements a system of instruction prefetch and caches lines that speeds up CPU code execution. It also implements the logic necessary to carry out the Flash memory operations (Program/Erase) controlled through the Flash registers. Refer to *Section 3: Embedded Flash memory (FLASH)* for more details.

2.6 Boot configuration

In the STM32L431/433/443, three different boot modes can be selected through the BOOT0 pin or the nBOOT0 bit into the FLASH_OPTR register (if the nSWBOOT0 bit is cleared into the FLASH_OPTR register), and nBOOT1 bit in the FLASH_OPTR register, as shown in the following table.

Table 4. Boot modes

nBOOT1 FLASH_OPTR[23]	nBOOT0 FLASH_OPTR[27]	BOOT0 pin PH3	nSWBOOT0 FLASH_OPTR[26]	Main Flash empty(1)	Boot Memory Space Alias
X	X	0	1	0	Main Flash memory is selected as boot area
X	X	0	1	1	System memory is selected as boot area
X	1	X	0	X	Main Flash memory is selected as boot area
0	X	1	1	X	Embedded SRAM1 is selected as boot area
0	0	X	0	X	Embedded SRAM1 is selected as boot area

Table 4. Boot modes (continued)

nBOOT1 FLASH_OPTR[23]	nBOOT0 FLASH_OPTR[27]	BOOT0 pin PH3	nSWBOOT0 FLASH_OPTR[26]	Main Flash empty(1)	Boot Memory Space Alias
1	X	1	1	X	System memory is selected as boot area
1	0	X	0	X	System memory is selected as boot area

1. A Flash empty check mechanism is implemented to force the boot from system Flash if the first Flash memory location is not programmed (0xFFFF FFFF) and if the boot selection was configured to boot from the main Flash.

The values on both BOOT0 (coming from the pin or the option bit) and nBOOT1 bit are latched on the 4th edge of the internal startup clock source after reset release. It is up to the user to set nBOOT1 and BOOT0 to select the required boot mode.

The BOOT0 pin or user option bit (depending on the nSWBOOT0 bit value in the FLASH_OPTR register), and nBOOT1 bit are also re-sampled when exiting from Standby mode. Consequently they must be kept in the required Boot mode configuration in Standby mode. After this startup delay has elapsed, the CPU fetches the top-of-stack value from address 0x0000 0000, then starts code execution from the boot memory at 0x0000 0004.

Depending on the selected boot mode, main Flash memory, system memory or SRAM1 is accessible as follows:

- Boot from main Flash memory: the main Flash memory is aliased in the boot memory space (0x0000 0000), but still accessible from its original memory space (0x0800 0000). In other words, the Flash memory contents can be accessed starting from address 0x0000 0000 or 0x0800 0000.
- Boot from system memory: the system memory is aliased in the boot memory space (0x0000 0000), but still accessible from its original memory space (0x1FFF 0000).
- Boot from the embedded SRAM1: the SRAM1 is aliased in the boot memory space (0x0000 0000), but it is still accessible from its original memory space (0x2000 0000).

PH3/BOOT0 GPIO is configured in:

- Input mode during the complete reset phase if the option bit nSWBOOT0 is set into the FLASH_OPTR register and then switches automatically in analog mode after reset is released (BOOT0 pin).
- Input mode from the reset phase to the completion of the option byte loading if the bit nSWBOOT0 is cleared into the FLASH_OPTR register (BOOT0 value coming from the option bit). It switches then automatically to the analog mode even if the reset phase is not complete.

Note: When the device boots from SRAM, in the application initialization code, you have to relocate the vector table in SRAM using the NVIC exception table and the offset register.

Physical remap

Once the boot mode is selected, the application software can modify the memory accessible in the code area (in this way the code can be executed through the ICode bus in place of the System bus). This modification is performed by programming the *SYSCFG memory remap register (SYSCFG_MEMRMP)* in the SYSCFG controller.

The following memories can thus be remapped:

- Main Flash memory
- System memory
- Embedded SRAM1 (48 KB)
- Quad-SPI memory

Table 5. Memory mapping vs. Boot mode/Physical remap

Addresses	Boot/Remap in main Flash memory	Boot/Remap in embedded SRAM1	Boot/Remap in System memory	Remap in QUADSPI
0x2000 0000 - 0x2000 BFFF	SRAM1	SRAM1	SRAM1	SRAM1
0x1FFF 0000 - 0x1FFF FFFF	System memory/OTP/Options bytes	System memory/OTP/Options bytes	System memory/OTP/Options bytes	System memory/OTP/Options bytes
0x1000 4000 - 0x1FFE FFFF	Reserved	Reserved	Reserved	Reserved
0x1000 0000 - 0x1000 3FFF	SRAM2	SRAM2	SRAM2	SRAM2
0x0804 0000 - 0x0FFF FFFF	Reserved	Reserved	Reserved	Reserved
0x0800 0000 - 0x0803 FFFF	Flash memory	Flash memory	Flash memory	Flash memory
0x0400 0000 - 0x07FF FFFF	Reserved	Reserved	Reserved	QUADSPI bank (128 MB) Aliased)
0x0010 0000 - 0x03FF FFFF	Reserved	Reserved	Reserved	QUADSPI bank (128 MB) Aliased)
0x0000 0000 - 0x000F FFFF(1)(2)	Flash (256 KB) Aliased	SRAM1 (48 KB) Aliased	System memory (28 KB) Aliased	QUADSPI bank (128 MB) Aliased)

1. When the QUADSPI is remapped at address 0x0000 0000, only 128 MB are remapped. In remap mode, the CPU can access the external memory via ICode bus instead of System bus which boosts up the performance.
2. Even when aliased in the boot memory space, the related memory is still accessible at its original memory space.

Embedded boot loader

The embedded boot loader is located in the System memory, programmed by ST during production. Refer to AN2606 STM32 microcontroller system memory boot mode.

3 Embedded Flash memory (FLASH)

3.1 Introduction

The Flash memory interface manages CPU AHB ICode and DCode accesses to the Flash memory. It implements the erase and program Flash memory operations and the read and write protection mechanisms.

The Flash memory interface accelerates code execution with a system of instruction prefetch and cache lines.

3.2 FLASH main features

- Up to 256 KByte of Flash memory (single bank)
- Memory organization:
  - Main memory: 256 KBytes
  - Information block: 32 KBytes
- 72-bit wide data read (64 bits plus 8 ECC bits)
- 72-bit wide data write (64 bits plus 8 ECC bits)
- Page erase (2 Kbytes) and mass erase

Flash memory interface features:

- Flash memory read operations
- Flash memory program/erase operations
- Read protection activated by option (RDP)
- 2 Write protection areas selected by option (WRP)
- 1 proprietary code read protection area selected by option (PCROP)
- Flash empty check
- Prefetch on ICODE
- Instruction Cache: 32 cache lines of 4 x 64 bits on ICode (1 KB RAM)
- Data Cache: 8 cache lines of 4 x 64 bits on DCode (256B RAM)
- Error Code Correction (ECC): 8 bits for 64-bit double-word
- Option byte loader
- Low-power mode

3.3 FLASH functional description

3.3.1 Flash memory organization

The Flash memory is organized as 72-bit wide memory cells (64 bits plus 8 ECC bits) that can be used for storing both code and data constants.

The Flash memory is organized as follows:

- A main memory block containing 128 pages of 2 Kbytes. Each page is made of 8 rows of 256 bytes.
- An Information block containing:
  - System memory from which the device boots in System memory boot mode. The area is reserved for use by STMicroelectronics and contains the boot loader that is used to reprogram the Flash memory through one of the following interfaces: USART1, USART2, USART3, USB[a] (DFU), I2C1, I2C2, I2C3, SPI1, SPI2, SPI3. It is programmed by STMicroelectronics when the device is manufactured, and protected against spurious write/erase operations. For further details, please refer to the AN2606 available from *www.st.com*.
  - 1 Kbyte (128 double word) OTP (one-time programmable) bytes for user data. The OTP data cannot be erased and can be written only once. If only one bit is at 0, the entire double word cannot be written anymore, even with the value 0x0000 0000 0000 0000.
  - Option bytes for user configuration.

The memory organization is based on a main area and an information block as shown in *Table 6*.

Table 6. Flash module - 256 KB single bank organization

Flash area	Flash memory addresses	Size (bytes)	Name
Main memory	0x0800 0000 - 0x0800 07FF	2 K	Page 0
	0x0800 0800 - 0x0800 0FFF	2 K	Page 1
	0x0800 1000 - 0x0800 17FF	2 K	Page 2
	0x0800 1800 - 0x0800 1FFF	2 K	Page 3
	- - - -	- - - -	- - - -
	0x0803 F800 - 0x0803 FFFF	2 K	Page 127
Information block	0x1FFF 0000 - 0x1FFF 6FFF	28 K	System memory
	0x1FFF 7000 - 0x1FFF 73FF	1 K	OTP area
	0x1FFF 7800 - 0x1FFF 780F	16	Option bytes

a. Not available for STM32L431xx devices.

Table 7. Flash module - 128 KB single bank organization

Flash area	Flash memory addresses	Size (bytes)	Name
Main memory	0x0800 0000 - 0x0800 07FF	2 K	Page 0
	0x0800 0800 - 0x0800 0FFF	2 K	Page 1
	0x0800 1000 - 0x0800 17FF	2 K	Page 2
	0x0800 1800 - 0x0800 1FFF	2 K	Page 3
	- - - -	- - - -	- - - -
	0x0802 F800 - 0x0802 FFFF	2 K	Page 63
Information block	0x1FFF 0000 - 0x1FFF 6FFF	28 K	System memory
	0x1FFF 7000 - 0x1FFF 73FF	1 K	OTP area
	0x1FFF 7800 - 0x1FFF 780F	16	Option bytes

3.3.2 Error code correction (ECC)

Data in Flash memory are 72-bits words: 8 bits are added per double word (64 bits). The ECC mechanism supports:

- One error detection and correction
- Two errors detection

When one error is detected and corrected, the flag ECCC (ECC correction) is set in *Flash ECC register (FLASH_ECCR)*. If ECCCIE is set, an interrupt is generated.

When two errors are detected, a flag ECCD (ECC detection) is set in FLASH_ECCR register. In this case, a NMI is generated.

When an ECC error is detected, the address of the failing double word is saved in ADDR_ECC[20:0] in the FLASH_ECCR register. ADDR_ECC[2:0] are always cleared.

When ECCC or ECCD is set, ADDR_ECC is not updated if a new ECC error occurs. FLASH_ECCR is updated only when ECC flags are cleared.

Note: For a virgin data: 0xFF FFFF FFFF FFFF FFFF, one error is detected and corrected but two errors detection is not supported.

When an ECC error is reported, a new read at the failing address may not generate an ECC error if the data is still present in the current buffer, even if ECCC and ECCD are cleared.

3.3.3 Read access latency

To correctly read data from Flash memory, the number of wait states (LATENCY) must be correctly programmed in the *Flash access control register (FLASH_ACR)* according to the frequency of the CPU clock (HCLK) and the internal voltage range of the device V_{CORE}. Refer to *Section 5.1.6: Dynamic voltage scaling management*. *Table 8* shows the correspondence between wait states and CPU clock frequency.

Table 8. Number of wait states according to CPU clock (HCLK) frequency

Wait states (WS) (LATENCY)	HCLK (MHz)	
	V_{CORE} Range 1	V_{CORE} Range 2
0 WS (1 CPU cycles)	≤ 16	≤ 6
1 WS (2 CPU cycles)	≤ 32	≤ 12
2 WS (3 CPU cycles)	≤ 48	≤ 18
3 WS (4 CPU cycles)	≤ 64	≤ 26
4 WS (5 CPU cycles)	≤ 80	≤ 26

After reset, the CPU clock frequency is 4 MHz and 0 wait state (WS) is configured in the FLASH_ACR register.

When changing the CPU frequency, the following software sequences must be applied in order to tune the number of wait states needed to access the Flash memory:

Increasing the CPU frequency:

1. Program the new number of wait states to the LATENCY bits in the *Flash access control register (FLASH_ACR)*.
2. Check that the new number of wait states is taken into account to access the Flash memory by reading the FLASH_ACR register.
3. Modify the CPU clock source by writing the SW bits in the RCC_CFGR register.
4. If needed, modify the CPU clock prescaler by writing the HPRE bits in RCC_CFGR.
5. Check that the new CPU clock source or/and the new CPU clock prescaler value is/are taken into account by reading the clock source status (SWS bits) or/and the AHB prescaler value (HPRE bits), respectively, in the RCC_CFGR register.

Decreasing the CPU frequency:

1. Modify the CPU clock source by writing the SW bits in the RCC_CFGR register.
2. If needed, modify the CPU clock prescaler by writing the HPRE bits in RCC_CFGR.
3. Check that the new CPU clock source or/and the new CPU clock prescaler value is/are taken into account by reading the clock source status (SWS bits) or/and the AHB prescaler value (HPRE bits), respectively, in the RCC_CFGR register.
4. Program the new number of wait states to the LATENCY bits in *Flash access control register (FLASH_ACR)*.
5. Check that the new number of wait states is used to access the Flash memory by reading the FLASH_ACR register.

3.3.4 Adaptive real-time memory accelerator (ART Accelerator™)

The proprietary Adaptive real-time (ART) memory accelerator is optimized for STM32 industry-standard ARM® Cortex®-M4 with FPU processors. It balances the inherent performance advantage of the ARM® Cortex®-M4 with FPU over Flash memory technologies, which normally requires the processor to wait for the Flash memory at higher operating frequencies.

To release the processor full performance, the accelerator implements an instruction prefetch queue and branch cache which increases program execution speed from the 64-bit Flash memory. Based on CoreMark benchmark, the performance achieved thanks to the ART accelerator is equivalent to 0 wait state program execution from Flash memory at a CPU frequency up to 80 MHz.

Instruction prefetch

The Cortex®-M4 fetches the instruction over the ICode bus and the literal pool (constant/data) over the DCode bus. The prefetch block aims at increasing the efficiency of ICode bus accesses.

Each Flash memory read operation provides 64 bits from either two instructions of 32 bits or four instructions of 16 bits according to the program launched. This 64-bits current instruction line is saved in a current buffer. So, in case of sequential code, at least two CPU cycles are needed to execute the previous read instruction line. Prefetch on the ICode bus can be used to read the next sequential instruction line from the Flash memory while the current instruction line is being requested by the CPU.

Prefetch is enabled by setting the PRFTEN bit in the *Flash access control register (FLASH_ACR)*. This feature is useful if at least one wait state is needed to access the Flash memory.

Figure 3 shows the execution of sequential 16-bit instructions with and without prefetch when 3 WS are needed to access the Flash memory.

Figure 3. Sequential 16 bits instructions execution

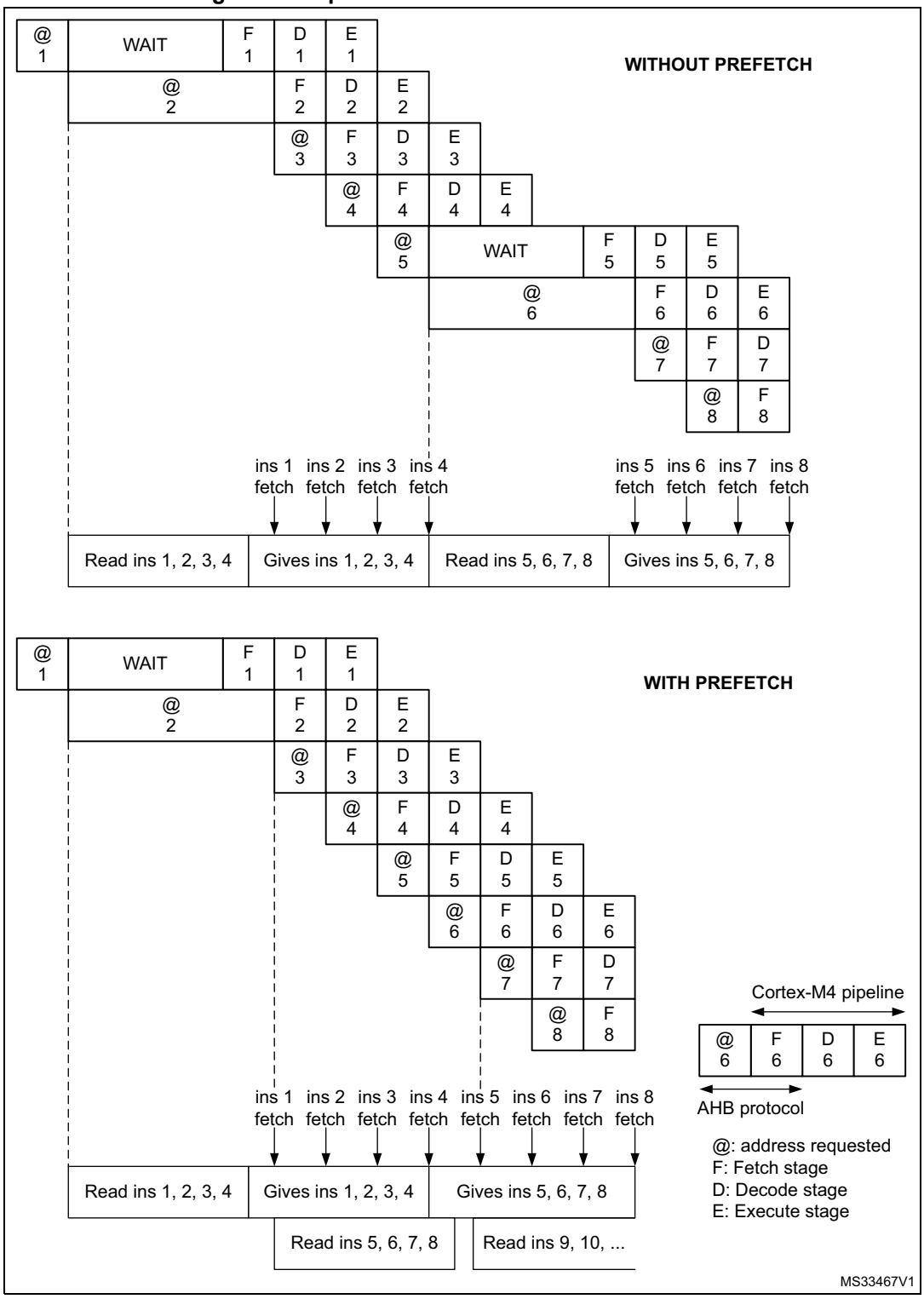

When the code is not sequential (branch), the instruction may not be present in the currently used instruction line or in the prefetched instruction line. In this case (miss), the penalty in terms of number of cycles is at least equal to the number of wait states.

If a loop is present in the current buffer, no new flash access is performed.

Instruction cache memory (I-Cache)

To limit the time lost due to jumps, it is possible to retain 32 lines of 4*64 bits in an instruction cache memory.This feature can be enabled by setting the instruction cache enable (ICEN) bit in the *Flash access control register (FLASH_ACR)*. Each time a miss occurs (requested data not present in the currently used instruction line, in the prefetched instruction line or in the instruction cache memory), the line read is copied into the instruction cache memory. If some data contained in the instruction cache memory are requested by the CPU, they are provided without inserting any delay. Once all the instruction cache memory lines have been filled, the LRU (least recently used) policy is used to determine the line to replace in the instruction memory cache. This feature is particularly useful in case of code containing loops.

The Instruction cache memory is enable after system reset.

Data cache memory (D-Cache)

Literal pools are fetched from Flash memory through the DCode bus during the execution stage of the CPU pipeline. Each DCode bus read access fetches 64 bits which are saved in a current buffer. The CPU pipeline is consequently stalled until the requested literal pool is provided. To limit the time lost due to literal pools, accesses through the AHB databus DCode have priority over accesses through the AHB instruction bus ICode.

If some literal pools are frequently used, the data cache memory can be enabled by setting the data cache enable (DCEN) bit in the *Flash access control register (FLASH_ACR)*. This feature works like the instruction cache memory, but the retained data size is limited to 8 rows of 4*64 bits.

The Data cache memory is enable after system reset.

Note: The D-Cache is active only when data is requested by the CPU (not by DMA1 and DMA2).

Data in option bytes block are not cacheable.

3.3.5 Flash program and erase operations

The STM32L4x embedded Flash memory can be programmed using in-circuit programming or in-application programming.

The **in-circuit programming (ICP)** method is used to update the entire contents of the Flash memory, using the JTAG, SWD protocol or the boot loader to load the user application into the microcontroller. ICP offers quick and efficient design iterations and eliminates unnecessary package handling or socketing of devices.

In contrast to the ICP method, **in-application programming (IAP)** can use any communication interface supported by the microcontroller (I/Os, USB[(a)], CAN, UART, I^2C, SPI, etc.) to download programming data into memory. IAP allows the user to re-program the Flash memory while the application is running. Nevertheless, part of the application has to have been previously programmed in the Flash memory using ICP.

The contents of the Flash memory are not guaranteed if a device reset occurs during a Flash memory operation.

a. Not available for STM32L431xx devices.

During a program/erase operation to the Flash memory, any attempt to read the Flash memory will stall the bus. The read operation will proceed correctly once the program/erase operation has completed.

Unlocking the Flash memory

After reset, write is not allowed in the *Flash control register (FLASH_CR)* to protect the Flash memory against possible unwanted operations due, for example, to electric disturbances. The following sequence is used to unlock this register:

1. Write KEY1 = 0x45670123 in the *Flash key register (FLASH_KEYR)*
2. Write KEY2 = 0xCDEF89AB in the FLASH_KEYR register.

Any wrong sequence will lock up the FLASH_CR register until the next system reset. In the case of a wrong key sequence, a bus error is detected and a Hard Fault interrupt is generated.

The FLASH_CR register can be locked again by software by setting the LOCK bit in the FLASH_CR register.

Note: The FLASH_CR register cannot be written when the BSY bit in the Flash status register (FLASH_SR) is set. Any attempt to write to it with the BSY bit set will cause the AHB bus to stall until the BSY bit is cleared.

3.3.6 Flash main memory erase sequences

The Flash memory erase operation can be performed at page level or on the whole Flash memory (Mass Erase). Mass Erase does not affect the Information block (system flash, OTP and option bytes).

Page erase

To erase a page (2Kbytes), follow the procedure below:

1. Check that no Flash memory operation is ongoing by checking the BSY bit in the *Flash status register (FLASH_SR)*.
2. Check and clear all error programming flags due to a previous programming. If not, PGSERR is set.
3. Set the PER bit and select the page you wish to erase (PNB) in the *Flash control register (FLASH_CR)*.
4. Set the STRT bit in the FLASH_CR register.
5. Wait for the BSY bit to be cleared in the FLASH_SR register.

Note: The internal oscillator HSI16 (16 MHz) is enabled automatically when STRT bit is set, and disabled automatically when STRT bit is cleared, except if the HSI16 is previously enabled with HSION in RCC_CR register.

If the page erase is part of write-protected area (by WRP or PCROP), WRPERR is set and the page erase request is aborted.

Mass erase

To perform a Mass Erase, follow the procedure below:

1. Check that no Flash memory operation is ongoing by checking the BSY bit in the FLASH_SR register
2. Check and clear all error programming flags due to a previous programming. If not, PGSERR is set.
3. Set the MER1 bit in the *Flash control register (FLASH_CR)*.
4. Set the STRT bit in the FLACH_CR register.
5. Wait for the BSY bit to be cleared in the *Flash status register (FLASH_SR)*.

Note: The internal oscillator HSI16 (16 MHz) is enabled automatically when STRT bit is set, and disabled automatically when STRT bit is cleared, except if the HSI16 is previously enabled with HSION in RCC_CR register.

If the Flash memory contains a write-protected area (by WRP or PCROP), WRPERR is set and the mass erase request is aborted.

3.3.7 Flash main memory programming sequences

The Flash memory is programmed 72 bits at a time (64 bits + 8 bits ECC).

Programming in a previously programmed address is not allowed except if the data to write is full zero, and any attempt will set PROGERR flag in the *Flash status register (FLASH_SR)*.

It is only possible to program double word (2 x 32-bit data).

- Any attempt to write byte or half-word will set SIZERR flag in the FLASH_SR register.
- Any attempt to write a double word which is not aligned with a double word address will set PGAERR flag in the FLASH_SR register.

Standard programming

The Flash memory programming sequence in standard mode is as follows:

1. Check that no Flash main memory operation is ongoing by checking the BSY bit in the *Flash status register (FLASH_SR)*.
2. Check and clear all error programming flags due to a previous programming. If not, PGSERR is set.
3. Set the PG bit in the *Flash control register (FLASH_CR)*.
4. Perform the data write operation at the desired memory address, inside main memory block or OTP area. Only double word can be programmed.
   - Write a first word in an address aligned with double word
   - Write the second word
5. Wait until the BSY bit is cleared in the FLASH_SR register.
6. Check that EOP flag is set in the FLASH_SR register (meaning that the programming operation has succeed), and clear it by software.
7. Clear the PG bit in the FLASH_SR register if there no more programming request anymore.

Note: When the flash interface has received a good sequence (a double word), programming is automatically launched and BSY bit is set. The internal oscillator HSI16 (16 MHz) is enabled

automatically when PG bit is set, and disabled automatically when PG bit is cleared, except if the HSI16 is previously enabled with HSION in RCC_CR register.

If the user needs to program only one word, double word must be completed with the erase value 0xFFFF FFFF to launch automatically the programming.

ECC is calculated from the double word to program.

Fast programming

This mode allows to program a row (32 double word) and to reduce the page programming time by eliminating the need for verifying the flash locations before they are programmed and to avoid rising and falling time of high voltage for each double word. During fast programming, the CPU clock frequency (HCLK) must be at least 8 MHz.

Only the main memory can be programmed in Fast programming mode.

The Flash main memory programming sequence in standard mode is as follows:

1. Perform a mass erase of the bank to program. If not, PGSERR is set.
2. Check that no Flash main memory operation is ongoing by checking the BSY bit in the *Flash status register (FLASH_SR)*.
3. Check and clear all error programming flag due to a previous programming.
4. Set the FSTPG bit in *Flash control register (FLASH_CR)*.
5. Write the 32 double words to program a row.
6. Wait until the BSY bit is cleared in the FLASH_SR register.
7. Check that EOP flag is set in the FLASH_SR register (meaning that the programming operation has succeed), and clear it by software.
8. Clear the FSTPG bit in the FLASH_SR register if there no more programming request anymore.

Note: *If the flash is attempted to be written in Fast programming mode while a read operation is on going in the same bank, the programming is aborted without any system notification (no error flag is set).*

When the flash interface has received the first double word, programming is automatically launched. The BSY bit is set when the high voltage is applied for the first double word, and it is cleared when the last double word has been programmed or in case of error. The internal oscillator HSI16 (16 MHz) is enabled automatically when FSTPG bit is set, and disabled automatically when FSTPG bit is cleared, except if the HSI16 is previously enabled with HSION in RCC_CR register.

The 32 double word must be written successively. The high voltage is kept on the flash for all the programming. Maximum time between two double words write requests is the time programming (around 20us). If a second double word arrives after this time programming, fast programming is interrupted and MISSERR is set.

High voltage mustn't exceed 8 ms for a full row between 2 erases. This is guaranteed by the sequence of 32 double words successively written with a clock system greater or equal to 8MHz. An internal time-out counter counts 7ms when Fast programming is set and stops the programming when time-out is over. In this case the FASTERR bit is set.

If an error occurs, high voltage is stopped and next double word to programmed is not programmed. Anyway, all previous double words have been properly programmed.

Programming errors

Several kind of errors can be detected. In case of error, the Flash operation (programming or erasing) is aborted.

- **PROGERR**: Programming Error

  In standard programming: PROGERR is set if the word to write is not previously erased (except if the value to program is full zero).
- **SIZERR**: Size Programming Error

  In standard programming or in fast programming: only double word can be programmed and only 32-bit data can be written. SIZERR is set if a byte or an half-word is written.
- **PGAERR**: Alignment Programming error

  PGAERR is set if one of the following conditions occurs:
  - In standard programming: the first word to be programmed is not aligned with a double word address, or the second word doesn't belong to the same double word address.
  - In fast programming: the data to program doesn't belong to the same row than the previous programmed double words, or the address to program in not greater than the previous one.
- **PGSERR**: Programming Sequence Error

  PGSERR is set if one of the following conditions occurs:
  - In the standard programming sequence or the fast programming sequence: a data is written when PG and FSTPG are cleared.
  - In the standard programming sequence or the fast programming sequence: MER1 and PER are not cleared when PG or FSTPG is set.
  - In the fast programming sequence: the Mass erase is not performed before setting FSTPG bit.
  - In the mass erase sequence: PG, FSTPG, and PER are not cleared when MER1 is set.
  - In the page erase sequence: PG, FSTPG and MER1 are not cleared when PER is set.
  - PGSERR is set also if PROGERR, SIZERR, PGAERR, WRPERR, MISSERR, FASTERR or PGSERR is set due to a previous programming error.
- **WRPERR**: Write Protection Error

  WRPERR is set if one of the following conditions occurs:
  - Attempt to program or erase in a write protected area (WRP) or in a PCROP area.
  - Attempt to perform a mass erase when one page or more is protected by WRP or PCROP.
  - The debug features are connected or the boot is executed from SRAM or from System flash when the read protection (RDP) is set to Level 1.
  - Attempt to modify the option bytes when the read protection (RDP) is set to Level 2.
- **MISSERR**: Fast Programming Data Miss Error

  In fast programming: all the data must be written successively. MISSERR is set if the previous data programmation is finished and the next data to program is not written yet.
- **FASTERR**: Fast Programming Error

In fast programming: FASTERR is set if one of the following conditions occurs:

- When FSTPG bit is set for more than 7µs which generates a time-out detection.
- When the row fast programming has been interrupted by a MISSERR, PGAERR, WRPERR or SIZERR.

If an error occurs during a program or erase operation, one of the following error flags is set in the FLASH_SR register:

PROGERR, SIZERR, PGAERR, PGSERR, MISSERR (Program error flags),

WRPERR (Protection error flag)

In this case, if the error interrupt enable bit ERRIE is set in the *Flash status register (FLASH_SR)*, an interrupt is generated and the operation error flag OPERR is set in the FLASH_SR register.

Note: If several successive errors are detected (for example, in case of DMA transfer to the Flash memory), the error flags cannot be cleared until the end of the successive write requests.

Programming and caches

If a Flash memory write access concerns some data in the data cache, the Flash write access modifies the data in the Flash memory and the data in the cache.

If an erase operation in Flash memory also concerns data in the data or instruction cache, you have to make sure that these data are rewritten before they are accessed during code execution. If this cannot be done safely, it is recommended to flush the caches by setting the DCRST and ICRST bits in the *Flash control register (FLASH_CR)*.

Note: The I/D cache should be flushed only when it is disabled (I/DCEN = 0).

3.4 FLASH option bytes

3.4.1 Option bytes description

The option bytes are configured by the end user depending on the application requirements. As a configuration example, the watchdog may be selected in hardware or software mode (refer to *Section 3.4.2: Option bytes programming*).

A double word is split up as follows in the option bytes:

Table 9. Option byte format

63-24	23-16	15 -8	7-0	31-24	23-16	15 -8	7-0
Complemented option byte 3	Complemented option byte 2	Complemented option byte 1	Complemented option byte 0	Option byte 3	Option byte 2	Option byte 1	Option byte 0

The organization of these bytes inside the information block is as shown in *Table 10: Option byte organization*.

The option bytes can be read from the memory locations listed in *Table 10: Option byte organization* or from the Option byte registers:

- *Flash option register (FLASH_OPTR)*
- *Flash PCROP Start address register (FLASH_PCROP1SR)*
- *Flash PCROP End address register (FLASH_PCROP1ER)*
- *Flash WRP area A address register (FLASH_WRP1AR)*
- *Flash WRP area B address register (FLASH_WRP1BR)*

Table 10. Option byte organization

Address	63	[62:56]	[55:48]	[47:40]	[39:32]	31	[30:24]	[23:16]	[15:8]	[7:0]
1FFF7800	$\overline{\text{USER OPT}}$				$\overline{\text{RDP}}$	USER OPT				RDP
1FFF7808	Unused			$\overline{\text{PCROP1_STRT}}$		Unused			PCROP1_STRT	
1FFF7810	$\overline{\text{PCROP_RDP}}$	Unused		$\overline{\text{PCROP1_END}}$		$\overline{\text{PCROP_RDP}}$	Unused		PCROP1_END	
1FFF7818	Unused		$\overline{\text{WRP1A_END}}$	Unused	$\overline{\text{WRP1A_STRT}}$	Unused		WRP1A_END	Unused	WRP1A_STRT
1FFF7820	Unused		$\overline{\text{WRP1B_END}}$	Unused	$\overline{\text{WRP1B_STRT}}$	Unused		WRP1B_END	Unused	WRP1B_STRT

User and read protection option bytes

Flash memory address: 0x1FFF 7800

ST production value: 0xFFEF F8AA

31	30	29	28	27	26	25	24	23	22	21	20	19	18	17	16
Res.	Res.	Res.	Res.	n BOOT0	nSW BOOT0	SRAM2 _RST	SRAM2 _PE	n BOOT1	Res.	Res.	Res.	WWDG _SW	IWGD_ STDBY	IWDG_ StOP	IWDG_ SW
				r	r	r	r	r				r	r	r	r
15	14	13	12	11	10	9	8	7	6	5	4	3	2	1	0
Res.	nRST_ SHDW	nRST_ STDBY	nRST_ STOP	Res.	BOR_LEV[2:0]			RDP[7:0]							
	r	r	r		r	r	r	r	r	r	r	r	r	r	r

Bits 31:28 Not used

Bit 27 **nBOOT0:** nBOOT0 option bit

0: nBOOT0 = 0
1: nBOOT0 = 1

Bit 26 **nSWBOOT0:** Software BOOT0

0: BOOT0 taken from the option bit nBOOT0
1: BOOT0 taken from PH3/BOOT0 pin

Bit 25 **SRAM2_RST:** SRAM2 Erase when system reset

0: SRAM2 erased when a system reset occurs
1: SRAM2 is not erased when a system reset occurs

Bit 24 **SRAM2_PE:** SRAM2 parity check enable

0: SRAM2 parity check enable
1: SRAM2 parity check disable

Bit 23 **nBOOT1:** Boot configuration

Together with the BOOT0 pin or option bit nBOOT0 (depending on nSWBOOT0 option bit configuration), this bit selects boot mode from the Flash main memory, SRAM1 or the System memory. Refer to *Section 2.6: Boot configuration*.

Bits 22:20 Not used

Bit 19 **WWDG_SW:** Window watchdog selection

0: Hardware window watchdog
1: Software window watchdog

Bit 18 **IWDG_STDBY:** Independent watchdog counter freeze in Standby mode

0: Independent watchdog counter is frozen in Standby mode
1: Independent watchdog counter is running in Standby mode

Bit 17 **IWDG_STOP:** Independent watchdog counter freeze in Stop mode

0: Independent watchdog counter is frozen in Stop mode
1: Independent watchdog counter is running in Stop mode

Bit 16 **IDWG_SW:** Independent watchdog selection

0: Hardware independent watchdog
1: Software independent watchdog

Bit 15 Not used

Bit 14 **nRST_SHDW**

0: Reset generated when entering the Shutdown mode
1: No reset generated when entering the Shutdown mode

Bit 13 **nRST_STDBY**

0: Reset generated when entering the Standby mode
1: No reset generate when entering the Standby mode

Bit 12 **nRST_STOP**

0: Reset generated when entering the Stop mode
1: No reset generated when entering the Stop mode

Bit 11 Not used

Bits10:8 **BOR_LEV:** BOR reset Level

These bits contain the VDD supply level threshold that activates/releases the reset.
000: BOR Level 0. Reset level threshold is around 1.7 V
001: BOR Level 1. Reset level threshold is around 2.0 V
010: BOR Level 2. Reset level threshold is around 2.2 V
011: BOR Level 3. Reset level threshold is around 2.5 V
100: BOR Level 4. Reset level threshold is around 2.8 V

Bits 7:0 **RDP:** Read protection level

0xAA: Level 0, read protection not active
0xCC: Level 2, chip read protection active
Others: Level 1, memories read protection active

PCROP Start address option bytes

Flash memory address: 0x1FFF 7808

ST production value: 0xFFFF FFFF

31	30	29	28	27	26	25	24	23	22	21	20	19	18	17	16
Res.	Res.	Res.	Res.	Res.	Res.	Res.	Res.	Res.	Res.	Res.	Res.	Res.	Res.	Res.	Res.
15	14	13	12	11	10	9	8	7	6	5	4	3	2	1	0
PCROP1_STRT[15:0]															
r	r	r	r	r	r	r	r	r	r	r	r	r	r	r	r

Bits 31:16 Not used

Bits 15:0 **PCROP1_STRT:** PCROP area start offset

PCROP1_STRT contains the first double-word of the PCROP area.

PCROP End address option bytes

Flash memory address: 0x1FFF 7810

ST production value: 0x0000 0000

31	30	29	28	27	26	25	24	23	22	21	20	19	18	17	16
PCROP _RDP	Res.	Res.	Res.	Res.	Res.	Res.	Res.	Res.	Res.	Res.	Res.	Res.	Res.	Res.	Res.
r															
15	14	13	12	11	10	9	8	7	6	5	4	3	2	1	0
PCROP1_END[15:0]															
r	r	r	r	r	r	r	r	r	r	r	r	r	r	r	r

Bit 31 **PCROP_RDP:** PCROP area preserved when RDP level decreased
This bit is set only. It is reset after a full mass erase due to a change of RDP from Level 1 to Level 0.
0: PCROP area is not erased when the RDP level is decreased from Level 1 to Level 0.
1: PCROP area is erased when the RDP level is decreased from Level 1 to Level 0 (full mass erase).

Bits 30:16 Not used

Bits 15:0 **PCROP1_END:** Bank 1 PCROP area end offset
PCROP1_END contains the last double-word of the bank 1 PCROP area.

WRP Area A address option bytes

Flash memory address: 0x1FFF 7818

ST production value: 0x0000 00FF

31	30	29	28	27	26	25	24	23	22	21	20	19	18	17	16
Res.	Res.	Res.	Res.	Res.	Res.	Res.	Res.	WRP1A_END[15:0]							
								r	r	r	r	r	r	r	r
15	14	13	12	11	10	9	8	7	6	5	4	3	2	1	0
Res.	Res.	Res.	Res.	Res.	Res.	Res.	Res.	WRP1A_STRT[15:0]							
								r	r	r	r	r	r	r	r

Bits 31:24 Not used

Bits 23:16 **WRP1A_END:** WRP first area “A” end offset
WRPA1_END contains the last page of the WRP first area.

Bits 15:8 Not used

Bits 7:0 **WRP1A_STRT:** WRP first area “A” start offset
WRPA1_STRT contains the first page of the WRP first area.

WRP Area B address option bytes

Flash memory address: 0x1FFF 7820

ST production value: 0x0000 00FF

31	30	29	28	27	26	25	24	23	22	21	20	19	18	17	16
Res.	Res.	Res.	Res.	Res.	Res.	Res.	Res.	WRP1B_END[15:0]							
								r	r	r	r	r	r	r	r
15	14	13	12	11	10	9	8	7	6	5	4	3	2	1	0
Res.	Res.	Res.	Res.	Res.	Res.	Res.	Res.	WRP1B_STRT[15:0]							
								r	r	r	r	r	r	r	r

Bits 31:24 Not used

Bits 23:16 **WRP1B_END:** WRP first area “B” end offset
WRPB1_END contains the last page of the WRP second area.

Bits 15:8 Not used

Bits 7:0 **WRP1B_STRT:** WRP first area “B” start offset
WRPB1_STRT contains the first page of the WRP second area.

3.4.2 Option bytes programming

After reset, the options related bits in the *Flash control register (FLASH_CR)* are write-protected. To run any operation on the option bytes page, the option lock bit OPTLOCK in the *Flash control register (FLASH_CR)* must be cleared. The following sequence is used to unlock this register:

1. Unlock the FLASH_CR with the LOCK clearing sequence (refer to *Unlocking the Flash memory*).
2. Write OPTKEY1 = 0x08192A3B in the *Flash option key register (FLASH_OPTKEYR)*.
3. Write OPTKEY2 = 0x4C5D6E7F in the FLASH_OPTKEYR register.

The user options can be protected against unwanted erase/program operations by setting the OPTLOCK bit by software.

Note: If LOCK is set by software, OPTLOCK is automatically set too.

Modifying user options

The option bytes are programmed differently from a main memory user address.

To modify the user options value, follow the procedure below:

1. Check that no Flash memory operation is on going by checking the BSY bit in the *Flash status register (FLASH_SR)*.
2. Clear OPTLOCK option lock bit with the clearing sequence described above.
3. Write the desired options value in the options registers: *Flash option register (FLASH_OPTR)*, *Flash PCROP Start address register (FLASH_PCROP1SR)*, *Flash PCROP End address register (FLASH_PCROP1ER)*, *Flash WRP area A address register (FLASH_WRP1AR)*, *Flash WRP area B address register (FLASH_WRP1BR)*.
4. Set the Options Start bit OPTSTRT in the *Flash control register (FLASH_CR)*.
5. Wait for the BSY bit to be cleared.

Note: Any modification of the value of one option is automatically performed by erasing user option bytes pages first and then programming all the option bytes with the values contained in the flash option registers.

Option byte loading

After the BSY bit is cleared, all new options are updated into the flash but they are not applied to the system. They will have effect on the system when they are loaded. Option bytes loading is performed in two cases:

- when OBL_LAUNCH bit is set in the *Flash control register (FLASH_CR)*.
- after a power reset (BOR reset or exit from Standby/Shutdown modes).

Option byte loader performs a read of the options block and stores the data into internal option registers. These internal registers configure the system and cannot be read with by

software. Setting OBL_LAUNCH generates a reset so the option byte loading is performed under system reset.

Each option bit has also its complement in the same double word. During option loading, a verification of the option bit and its complement allows to check the loading has correctly taken place.

During option byte loading, the options are read by double word with ECC. If the word and its complement are matching, the option word/byte is copied into the option register.

If the comparison between the word and its complement fails, a status bit OPTVERR is set. Mismatch values are forced into the option registers:

- For USR OPT option, the value of mismatch is all options at ‘1’, except for BOR_LEV which is “000” (lowest threshold)
- For WRP option, the value of mismatch is the default value “No protection”
- For RDP option, the value of mismatch is the default value “Level 1”
- For PCROP, the value of mismatch is “all memory protected”

On system reset rising, internal option registers are copied into option registers which can be read and written by software (FLASH_OPTR, FLASH_PCROP1SR, FLASH_PCROP1ER, FLASH_WRP1AR, FLASH_WRP1BR). These registers are also used to modify options. If these registers are not modified by user, they reflects the options states of the system. See *Section : Modifying user options* for more details.

3.5 FLASH memory protection

The Flash main memory can be protected against external accesses with the Read protection (RDP). The pages of the Flash memory can also be protected against unwanted write due to loss of program counter contexts. The write-protection (WRP) granularity is one page (2 KBytes). Apart of the flash memory can also be protected against read and write from third parties (PCROP). The PCROP granularity is double word (64-bit).

3.5.1 Read protection (RDP)

The read protection is activated by setting the RDP option byte and then, by applying a system reset to reload the new RDP option byte. The read protection protects to the Flash main memory, the option bytes, the backup registers (RTC_BKPxR in the RTC) and the SRAM2.

Note: If the read protection is set while the debugger is still connected through JTAG/SWD, apply a POR (power-on reset) instead of a system reset.

There are three levels of read protection from no protection (level 0) to maximum protection or no debug (level 2).

The Flash memory is protected when the RDP option byte and its complement contain the pair of values shown in *Table 11*.

Table 11. Flash memory read protection status

RDP byte value	RDP complement value	Read protection level
0xAA	0x55	Level 0
Any value except 0xAA or 0xCC	Any value (not necessarily complementary) except 0x55 and 0x33	Level 1 (default)
0xCC	0x33	Level 2

The System memory area is read accessible whatever the protection level. It is never accessible for program/erase operation.

Level 0: no protection

Read, program and erase operations into the Flash main memory area are possible. The option bytes, the SRAM2 and the backup registers are also accessible by all operations.

Level 1: Read protection

This is the default protection level when RDP option byte is erased. It is defined as well when RDP value is at any value different from 0xAA and 0xCC, or even if the complement is not correct.

- **User mode:** Code executing in user mode (**Boot Flash**) can access Flash main memory, option bytes, SRAM2 and backup registers with all operations.
- **Debug, boot RAM and boot loader modes:** In debug mode or when code is running from boot RAM or boot loader, the Flash main memory, the backup registers (RTC_BKPxR in the RTC) and the SRAM2 are totally inaccessible. In these modes, a read or write access to the Flash generates a bus error and a Hard Fault interrupt.

Caution: In case the Level 1 is configured and no PCROP area is defined, it is mandatory to set PCROP_RDP bit to 1 (full mass erase when the RDP level is decreased from Level 1 to Level 0). In case the Level 1 is configured and a PCROP area is defined, if user code needs to be protected by RDP but not by PCROP, it must not be placed in a page containing a PCROP area.

Level 2: No debug

In this level, the protection level 1 is guaranteed. In addition, the Cortex®-M4 debug port, the boot from RAM (boot RAM mode) and the boot from System memory (boot loader mode) are no more available. In user execution mode (boot FLASH mode), all operations are allowed on the Flash Main memory. On the contrary, only read operations can be performed on the option bytes.

Option bytes cannot be programmed nor erased. Thus, the level 2 cannot be removed at all: it is an irreversible operation. When attempting to modify the options bytes, the protection error flag WRPERR is set in the Flash_SR register and an interrupt can be generated.

Note: The debug feature is also disabled under reset.

STMicroelectronics is not able to perform analysis on defective parts on which the level 2 protection has been set.

Changing the Read protection level

It is easy to move from level 0 to level 1 by changing the value of the RDP byte to any value (except 0xCC). By programming the 0xCC value in the RDP byte, it is possible to go to level 2 either directly from level 0 or from level 1. Once in level 2, it is no more possible to modify the Read protection level.

When the RDP is reprogrammed to the value 0xAA to move from Level 1 to Level 0, a mass erase of the Flash main memory is performed if PCROP_RDP is set in the *Flash PCROP End address register (FLASH_PCROP1ER)*. The backup registers (RTC_BKPxR in the RTC) and the SRAM2 are also erased. The user options except PCROP protection are set to their previous values copied from FLASH_OPTR, FLASH_WRPxyR (x=1 and y =A or B). PCROP is disable. The OTP area is not affected by mass erase and remains unchanged.

If the bit PCROP_RDP is cleared in the FLASH_PCROP1ER, the full mass erase is replaced by a partial mass erase that is successive page erases in the bank where PCROP is active, except for the pages protected by PCROP. This is done in order to keep the PCROP code. Only when the Flash memory is erased, options are re-programmed with their previous values. This is also true for FLASH_PCROPxSR and FLASH_PCROPxER registers (x=1).

Note: Full Mass Erase or Partial Mass Erase is performed only when Level 1 is active and Level 0 requested. When the protection level is increased (0->1, 1->2, 0->2) there is no mass erase.

To validate the protection level change, the option bytes must be reloaded through the OBL_LAUNCH bit in Flash control register.

Figure 4. Changing the Read protection (RDP) level

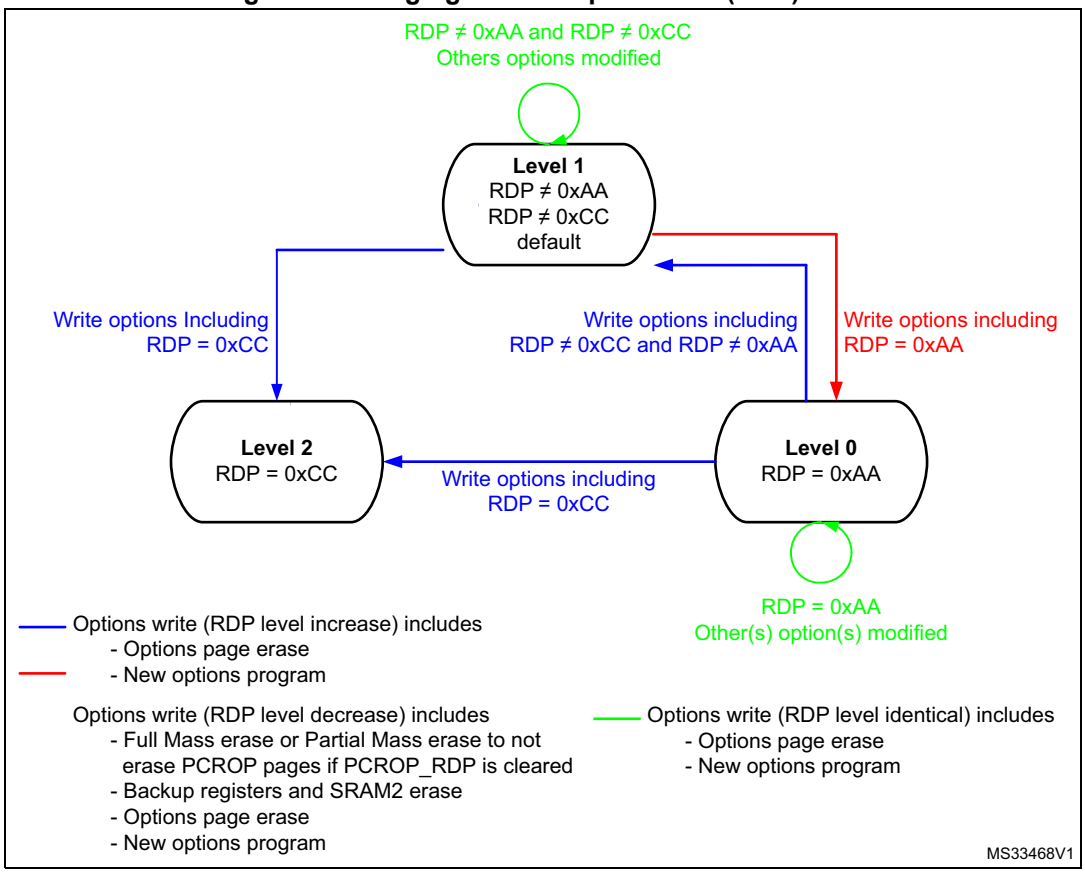

Table 12. Access status versus protection level and execution modes

Area	Protection level	User execution (BootFromFlash)			Debug/ BootFromRam/ BootFromLoader		
		Read	Write	Erase	Read	Write	Erase
Flash main memory	1	Yes	Yes	Yes	No	No	No(3)
	2	Yes	Yes	Yes	N/A(1)	N/A(1)	N/A(1)
System memory (2)	1	Yes	No	No	Yes	No	No
	2	Yes	No	No	NA(1)	N/A(1)	N/A(1)
Option bytes	1	Yes	Yes(3)	Yes	Yes	Yes(3)	Yes
	2	Yes	No	No	N/A(1)	N/A(1)	N/A(1)
Backup registers	1	Yes	Yes	N/A	No	No	No(4)
	2	Yes	Yes	N/A	N/A(1)	N/A(1)	N/A(1)
SRAM2	1	Yes	Yes	N/A	No	No	No(5)
	2	Yes	Yes	N/A	N/A(1)	N/A(1)	N/A(1)

1. When the protection level 2 is active, the Debug port, the boot from RAM and the boot from system memory are disabled.
2. The system memory is only read-accessible, whatever the protection level (0, 1 or 2) and execution mode.
3. The Flash main memory is erased when the RDP option byte is programmed with all level protections disabled (0xAA).
4. The backup registers are erased when RDP changes from level 1 to level 0.
5. The SRAM2 is erased when RDP changes from level 1 to level 0.

3.5.2 Proprietary code readout protection (PCROP)

Apart of the flash memory can be protected against read and write from third parties. The protected area is execute-only: it can only be reached by the STM32 CPU, as an instruction code, while all other accesses (DMA, debug and CPU data read, write and erase) are strictly prohibited. The PCROP area has a double word (64-bit) granularity. An additional option bit (PCROP_RDP) allows to select if the PCROP area is erased or not when the RDP protection is changed from Level 1 to Level 0 (refer to *Changing the Read protection level*).

The PCROP area is defined by a start page offset and an end page offset into the Flash memory. These offsets are defined in the PCROP address registers *Flash PCROP Start address register (FLASH_PCROP1SR)*, *Flash PCROP End address register (FLASH_PCROP1ER)*.

The PCROP area is defined from the address: *Flash memory Base address + [PCROP1_STRT x 0x8] (included)* to the address: *Flash memory Base address + [(PCROP1_END+1) x 0x8] (excluded)*. The minimum PCROP area size is two double-words (128 bits).

For example, to protect by PCROP from the address 0x08062F80 (included) to the address 0x08070004 (included):

- if boot in flash is selected, FLASH_PCROP1SR and FLASH_PCROP1ER registers must be programmed with:
  - PCROP1_STRT = 0xC5F0.
  - PCROP1_END = 0xE000.

Any read access performed through the D-bus to a PCROP protected area will trigger RDERR flag error.

Any PCROP protected address is also write protected and any write access to one of these addresses will trigger WRPERR.

Any PCROP area is also erase protected. Consequently, any erase to a page in this zone is impossible (including the page containing the start address and the end address of this zone). Moreover, a software mass erase cannot be performed if one zone is PCROP protected.

For previous example, due to erase by page, all pages from page 0xC5 to 0xE0 are protected in case of page erase. (All addresses from 0x08062800 to 0x080707FF can't be erased).

Deactivation of PCROP can only occurs when the RDP is changing from level 1 to level 0. If the user options modification tries to clear PCROP or to decrease the PCROP area, the options programming is launched but PCROP area stays unchanged. On the contrary, it is possible to increase the PCROP area.

When option bit PCROP_RDP is cleared, when the RDP is changing from level 1 to level 0, Full Mass Erase is replaced by Partial Mass Erase in order to keep the PCROP area (refer

to *Changing the Read protection level*). In this case, PCROP1_STRT and PCROP1_END are also not erased.

Note: It is recommended to align PCROP area with page granularity when using PCROP_RDP, or to leave free the rest of the page where PCROP zone starts or ends.

3.5.3 Write protection (WRP)

The user area in Flash memory can be protected against unwanted write operations. Two write-protected (WRP) areas can be defined, with page (2 KBytes) granularity. The area is defined by a start page offset and an end page offset related to the physical Flash memory base address. These offsets are defined in the WRP address registers: *Flash WRP area A address register (FLASH_WRP1AR)*, *Flash WRP area B address register (FLASH_WRP1BR)*.

The WRP "y" area (y=A,B) is defined from the address: *Flash memory Base address + [WRP1y_STRT x 0x800] (included)* to the address: *Flash memory Base address + [(WRP1y_END+1) x 0x800] (excluded)*.

For example, to protect by WRP from the address 0x08062800 (included) to the address 0x080707FF (included):

- if boot in flash is selected, FLASH_WRP1AR register must be programmed with:
  - WRP1A_STRT = 0xC5.
  - WRP1A_END = 0xE0.

  WRP1B_STRT and WRP1B_END in FLASH_WRP1BR can be used instead (area "B" in Flash memory).

When WRP is active, it cannot be erased or programmed. Consequently, a software mass erase cannot be performed if one area is write-protected.

If an erase/program operation to a write-protected part of the Flash memory is attempted, the write protection error flag (WRPERR) is set in the FLASH_SR register. This flag is also set for any write access to:

- OTP area
- part of the Flash memory that can never be written like the ICP
- PCROP area.

Note: When the memory read protection level is selected (RDP level = 1), it is not possible to program or erase Flash memory if the CPU debug features are connected (JTAG or single wire) or boot code is being executed from RAM or System flash, even if WRP is not activated.

Note: To validate the WRP options, the option bytes must be reloaded through the OBL_LAUNCH bit in Flash control register.

3.6 FLASH interrupts

Table 13. Flash interrupt request

Interrupt event	Event flag	Event flag/interrupt clearing method	Interrupt enable control bit
End of operation	EOP(1)	Write EOP=1	EOPIE
Operation error	OPERR(2)	Write OPERR=1	ERRIE
Read error	RDERR	Write RDERR=1	RDERRIE
ECC correction	ECCC	Write ECCC=1	ECCCIE

1. EOP is set only if EOPIE is set.
2. OPERR is set only if ERRIE is set.

3.7 FLASH registers

3.7.1 Flash access control register (FLASH_ACR)

Address offset: 0x00

Reset value: 0x0000 0600

Access: no wait state, word, half-word and byte access

31	30	29	28	27	26	25	24	23	22	21	20	19	18	17	16
Res.	Res.	Res.	Res.	Res.	Res.	Res.	Res.	Res.	Res.	Res.	Res.	Res.	Res.	Res.	Res.

15	14	13	12	11	10	9	8	7	6	5	4	3	2	1	0
Res.	SLEEP_PD	RUN_PD	DCRST	ICRST	DCEN	ICEN	PRFTEN	Res.	Res.	Res.	Res.	Res.	LATENCY[2:0]		
	rw	rw	rw	rw	rw	rw	rw						rw	rw	rw

Bits 31:15 Reserved, must be kept at reset value.

Bit 14 **SLEEP_PD**: Flash Power-down mode during Sleep or Low-power sleep mode

This bit determines whether the flash memory is in Power-down mode or Idle mode when the device is in Sleep or Low-power sleep mode.

0: Flash in Idle mode during Sleep and Low-power sleep modes

1: Flash in Power-down mode during Sleep and Low-power sleep modes

Caution: The flash must not be put in power-down while a program or an erase operation is on-going.

Bit 13 **RUN_PD**: Flash Power-down mode during Run or Low-power run mode

This bit is write-protected with FLASH_PDKEYR.

This bit determines whether the flash memory is in Power-down mode or Idle mode when the device is in Run or Low-power run mode. The flash memory can be put in power-down mode only when the code is executed from RAM. The Flash must not be accessed when RUN_PD is set.

0: Flash in Idle mode

1: Flash in Power-down mode

Caution: The flash must not be put in power-down while a program or an erase operation is on-going.

Bit 12 **DCRST**: Data cache reset

0: Data cache is not reset

1: Data cache is reset

This bit can be written only when the data cache is disabled.

Bit 11 **ICRST**: Instruction cache reset

0: Instruction cache is not reset

1: Instruction cache is reset

This bit can be written only when the instruction cache is disabled.

Bit 10 **DCEN**: Data cache enable

0: Data cache is disabled

1: Data cache is enabled

Bit 9 **ICEN**: Instruction cache enable
0: Instruction cache is disabled
1: Instruction cache is enabled

Bit 8 **PRFTEN:** Prefetch enable
0: Prefetch disabled
1: Prefetch enabled

Bits 7:3 Reserved, must be kept at reset value.

Bits 2:0 **LATENCY[2:0]**: Latency
These bits represent the ratio of the SYSCLK (system clock) period to the Flash access time.
000: Zero wait state
001: One wait state
010: Two wait sates
011: Three wait sates
100: Four wait sates
others: reserved

3.7.2 Flash Power-down key register (FLASH_PDKEYR)

Address offset: 0x04

Reset value: 0x0000 0000

Access: no wait state, word access

31	30	29	28	27	26	25	24	23	22	21	20	19	18	17	16
PDKEYR[31:16]															
w	w	w	w	w	w	w	w	w	w	w	w	w	w	w	w
15	14	13	12	11	10	9	8	7	6	5	4	3	2	1	0
PDKEYR[15:0]															
w	w	w	w	w	w	w	w	w	w	w	w	w	w	w	w

Bits 31:0 **PDKEYR**: Power-down in Run mode Flash key
The following values must be written consecutively to unlock the RUN_PD bit in FLASH_ACR:
PDKEY1: 0x04152637
PDKEY2: 0xFAFBFCFD

3.7.3 Flash key register (FLASH_KEYR)

Address offset: 0x08

Reset value: 0x0000 0000

Access: no wait state, word access

31	30	29	28	27	26	25	24	23	22	21	20	19	18	17	16
KEYR[31:16]															
w	w	w	w	w	w	w	w	w	w	w	w	w	w	w	w
15	14	13	12	11	10	9	8	7	6	5	4	3	2	1	0
KEYR[15:0]															
w	w	w	w	w	w	w	w	w	w	w	w	w	w	w	w

Bits 31:0 **KEYR**: Flash key

The following values must be written consecutively to unlock the FLACH_CR register allowing flash programming/erasing operations:
KEY1: 0x45670123
KEY2: 0xCDEF89AB

3.7.4 Flash option key register (FLASH_OPTKEYR)

Address offset: 0x0C

Reset value: 0x0000 0000

Access: no wait state, word access

31	30	29	28	27	26	25	24	23	22	21	20	19	18	17	16
OPTKEYR[31:16]															
w	w	w	w	w	w	w	w	w	w	w	w	w	w	w	w
15	14	13	12	11	10	9	8	7	6	5	4	3	2	1	0
OPTKEYR[15:0]															
w	w	w	w	w	w	w	w	w	w	w	w	w	w	w	w

Bits 31:0 **OPTKEYR**: Option byte key

The following values must be written consecutively to unlock the FLACH_OPTR register allowing option byte programming/erasing operations:
KEY1: 0x08192A3B
KEY2: 0x4C5D6E7F

3.7.5 Flash status register (FLASH_SR)

Address offset: 0x10

Reset value: 0x000X 0000

Access: no wait state, word, half-word and byte access

31	30	29	28	27	26	25	24	23	22	21	20	19	18	17	16
Res.	Res.	Res.	Res.	Res.	Res.	Res.	Res.	Res.	Res.	Res.	Res.	Res.	Res.	P EMPTY	BSY
														rs	r
15	14	13	12	11	10	9	8	7	6	5	4	3	2	1	0
OPTV ERR	RD ERR	Res.	Res.	Res.	Res.	FAST ERR	MISS ERR	PGS ERR	SIZ ERR	PGA ERR	WRP ERR	PROG ERR	Res.	OP ERR	EOP
rc_w1	rc_w1					rc_w1	rc_w1	rc_w1	rc_w1	rc_w1	rc_w1	rc_w1		rc_w1	rc_w1

Bits 31:18 Reserved, must be kept at reset value.

Bit 17 **PEMPTY**: Program EMPTY

Set by hardware on power-on reset or after OBL_LAUNCH command execution if the Flash is not programmed and the user intends to boot from the main Flash. Cleared by hardware on power-on reset or after OBL_LAUNCH command execution if the Flash is programmed and the user intends to boot from main Flash. This bit can also be set and cleared by software.

1: The bit value is toggling

0: No effect

This bit can be set to clear the Program Empty bit if an OBL_LAUNCH is done by software after Flash programming (boot in main flash selected). It finally forces the boot in the main flash, without loosing the debugger connection.

Bit 16 **BSY**: Busy

This indicates that a Flash operation is in progress. This is set on the beginning of a Flash operation and reset when the operation finishes or when an error occurs.

Bit 15 **OPTVERR**: Option validity error

Set by hardware when the options read may not be the one configured by the user. If option haven't been properly loaded, OPTVERR is set again after each system reset.

Cleared by writing 1.

Bit 14 **RDERR**: PCROP read error

Set by hardware when an address to be read through the D-bus belongs to a read protected area of the flash (PCROP protection). An interrupt is generated if RDERRIE is set in FLASH_CR.

Cleared by writing 1.

Bits 13:10 Reserved, must be kept at reset value.

Bit 9 **FASTERR**: Fast programming error

Set by hardware when a fast programming sequence (activated by FSTPG) is interrupted due to an error (alignment, size, write protection or data miss). The corresponding status bit (PGAERR, SIZERR, WRPERR or MISSERR) is set at the same time.

Cleared by writing 1.

Bit 8 **MISERR**: Fast programming data miss error

In Fast programming mode, 32 double words must be sent to flash successively, and the new data must be sent to the flash logic control before the current data is fully programmed. MISSERR is set by hardware when the new data is not present in time.

Cleared by writing 1.

Bit 7 **PGSERR**: Programming sequence error

Set by hardware when a write access to the Flash memory is performed by the code while PG or FSTPG have not been set previously. Set also by hardware when PROGERR, SIZERR, PGAERR, WRPERR, MISSERR or FASTERR is set due to a previous programming error.

Cleared by writing 1.

Bit 6 **SIZERR**: Size error

Set by hardware when the size of the access is a byte or half-word during a program or a fast program sequence. Only double word programming is allowed (consequently: word access).

Cleared by writing 1.

Bit 5 **PGAERR**: Programming alignment error

Set by hardware when the data to program cannot be contained in the same 64-bit Flash memory row in case of standard programming, or if there is a change of page during fast programming.

Cleared by writing 1.

Bit 4 **WRPERR**: Write protection error

Set by hardware when an address to be erased/programmed belongs to a write-protected part (by WRP, PCROP or RDP level 1) of the Flash memory.

Cleared by writing 1.

Bit 3 **PROGERR**: Programming error

Set by hardware when a double-word address to be programmed contains a value different from '0xFFFF FFFF' before programming, except if the data to write is '0x0000 0000'.

Cleared by writing 1.

Bit 2 Reserved, must be kept at reset value.

Bit 1 **OPERR**: Operation error

Set by hardware when a Flash memory operation (program / erase) completes unsuccessfully.

This bit is set only if error interrupts are enabled (ERRIE = 1).

Cleared by writing ‘1’.

Bit 0 **EOP**: End of operation

Set by hardware when one or more Flash memory operation (programming / erase) has been completed successfully.

This bit is set only if the end of operation interrupts are enabled (EOPIE = 1).

Cleared by writing 1.

3.7.6 Flash control register (FLASH_CR)

Address offset: 0x14

Reset value: 0xC000 0000

Access: no wait state when no Flash memory operation is on going, word, half-word and byte access

31	30	29	28	27	26	25	24	23	22	21	20	19	18	17	16
LOCK	OPT LOCK	Res.	Res.	OBL_ LAUNCH	RD ERRIE	ERR IE	EOP IE	Res.	Res.	Res.	Res.	Res.	FSTPG	OPT STRT	STRT
rs	rs			rc_w1	rw	rw	rw						rw	rs	rs

15	14	13	12	11	10	9	8	7	6	5	4	3	2	1	0
Res.	Res.	Res.	Res.	Res.	PNB[7:0]								MER1	PER	PG
					rw	rw	rw	rw	rw	rw	rw	rw	rw	rw	rw

Bit 31 **LOCK:** FLASH_CR Lock

This bit is set only. When set, the FLASH_CR register is locked. It is cleared by hardware after detecting the unlock sequence.
In case of an unsuccessful unlock operation, this bit remains set until the next system reset.

Bit 30 **OPTLOCK:** Options Lock

This bit is set only. When set, all bits concerning user option in FLASH_CR register and so option page are locked. This bit is cleared by hardware after detecting the unlock sequence. The LOCK bit must be cleared before doing the unlock sequence for OPTLOCK bit.
In case of an unsuccessful unlock operation, this bit remains set until the next reset.

Bits 29:28 Reserved, must be kept at reset value.

Bit 27 **OBL_LAUNCH**: Force the option byte loading

When set to 1, this bit forces the option byte reloading. This bit is cleared only when the option byte loading is complete. It cannot be written if OPTLOCK is set.
0: Option byte loading complete
1: Option byte loading requested

Bit 26 **RDERRIE**: PCROP read error interrupt enable

This bit enables the interrupt generation when the RDERR bit in the FLASH_SR is set to 1.
0: PCROP read error interrupt disabled
1: PCROP read error interrupt enabled

Bit 25 **ERRIE**: Error interrupt enable

This bit enables the interrupt generation when the OPERR bit in the FLASH_SR is set to 1.
0: OPERR error interrupt disabled
1: OPERR error interrupt enabled

Bit 24 **EOPIE**: End of operation interrupt enable

This bit enables the interrupt generation when the EOP bit in the FLASH_SR is set to 1.
0: EOP Interrupt disabled
1: EOP Interrupt enabled

Bits 23:19 Reserved, must be kept at reset value

Bit 18 **FSTPG**: Fast programming
0: Fast programming disabled
1: Fast programming enabled

Bit 17 **OPTSTRT**: Options modification start
This bit triggers an options operation when set.
This bit is set only by software, and is cleared when the BSY bit is cleared in FLASH_SR.

Bit 16 **START**: Start
This bit triggers an erase operation when set. If MER1, MER2 and PER bits are reset and the STRT bit is set, an unpredictable behavior may occur without generating any error flag. This condition should be forbidden.
This bit is set only by software, and is cleared when the BSY bit is cleared in FLASH_SR.

Bits 15:11 Reserved, must be kept at reset value.

Bits 10:3 **PNB[7:0]**: Page number selection
These bits select the page to erase:
00000000: page 0
00000001: page 1
...
11111111: page 255

Bit 2 **MER1**: Mass erase
This bit triggers the mass erase (all user pages) when set.

Bit 1 **PER**: Page erase
0: page erase disabled
1: page erase enabled

Bit 0 **PG**: Programming
0: Flash programming disabled
1: Flash programming enabled

3.7.7 Flash ECC register (FLASH_ECCR)

Address offset: 0x18

Reset value: 0x0000 0000

Access: no wait state when no Flash memory operation is on going, word, half-word and byte access

31	30	29	28	27	26	25	24	23	22	21	20	19	18	17	16
ECCD	ECCC	Res.	Res.	Res.	Res.	Res.	ECCC IE	Res.	Res.	Res.	SYSF_ ECC	Res.	ADDR_ECC[18:16]		
rc_w1	rc_w1						rw				r		r	r	r

15	14	13	12	11	10	9	8	7	6	5	4	3	2	1	0
ADDR_ECC[15:0]															
r	r	r	r	r	r	r	r	r	r	r	r	r	r	r	r

Bit 31 **ECCD**: ECC detection

Set by hardware when two ECC errors have been detected. When this bit is set, a NMI is generated

Cleared by writing 1.

Bit 30 **ECCD**: ECC correction

Set by hardware when one ECC error has been detected and corrected. An interrupt is generated if ECCIE is set.

Cleared by writing 1.

Bits 29:25 Reserved, must be kept at reset value.

Bit 24 **ECCIE**: ECC correction interrupt enable

0: ECCC interrupt disabled

1: ECCC interrupt enabled

Bits 23:21 Reserved, must be kept at reset value.

Bit 20 **SYSF_ECC**: System Flash ECC fail

This bit indicates that the ECC error correction or double ECC error detection is located in the System Flash.

Bit 19 Reserved, must be kept at reset value.

Bits 18:0 **ADDR_ECC**: ECC fail address

This bit indicates which address in the bank is concerned by the ECC error correction or by the double ECC error detection.

3.7.8 Flash option register (FLASH_OPTR)

Address offset: 0x20

Reset value: 0xFXXX XXXX. The option bits are loaded with values from Flash memory at reset release.

Access: no wait state when no Flash memory operation is on going, word, half-word and byte access

31	30	29	28	27	26	25	24	23	22	21	20	19	18	17	16
Res.	Res.	Res.	Res.	n BOOT0	nSW BOOT0	SRAM2 _RST	SRAM2 _PE	nBOOT 1	Res.	Res.	Res.	WWDG _SW	IWGD_ STDBY	IWDG_ StOP	IWDG_ SW
				rw	rw	rw	rw	rw				rw	rw	rw	rw

15	14	13	12	11	10	9	8	7	6	5	4	3	2	1	0
Res.	nRST_ SHDW	nRST_ STDBY	nRST_ STOP	Res.	BOR_LEV[2:0]			RDP[7:0]							
	rw	rw	rw		rw	rw	rw	rw	rw	rw	rw	rw	rw	rw	rw

Bits 31:28 Reserved, must be kept at reset value.

Bit 27 **nBOOT0:** nBOOT0 option bit

0: nBOOT0 = 0

1: nBOOT0 = 1

Bit 26 **nSWBOOT0:** Software BOOT0

0: BOOT0 taken from the option bit nBOOT0

1: BOOT0 taken from PH3/BOOT0 pin

Bit 25 **SRAM2_RST:** SRAM2 Erase when system reset

0: SRAM2 erased when a system reset occurs
1: SRAM2 is not erased when a system reset occurs

Bit 24 **SRAM2_PE:** SRAM2 parity check enable

0: SRAM2 parity check enable
1: SRAM2 parity check disable

Bit 23 **nBOOT1:** Boot configuration

Together with the BOOT0 pin or option bit nBOOT0 (depending on nSWBOOT0 option bit configuration), this bit selects boot mode from the Flash main memory, SRAM1 or the System memory. Refer to *Section 2.6: Boot configuration*.

Bits 22:20 Reserved, must be kept at reset value.

Bit 19 **WWDG_SW:** Window watchdog selection

0: Hardware window watchdog
1: Software window watchdog

Bit 18 **IWDG_STDBY:** Independent watchdog counter freeze in Standby mode

0: Independent watchdog counter is frozen in Standby mode
1: Independent watchdog counter is running in Standby mode

Bit 17 **IWDG_STOP:** Independent watchdog counter freeze in Stop mode

0: Independent watchdog counter is frozen in Stop mode
1: Independent watchdog counter is running in Stop mode

Bit 16 **IDWG_SW:** Independent watchdog selection

0: Hardware independent watchdog
1: Software independent watchdog

Bit 15 Reserved, must be kept cleared

Bit 14 **nRST_SHDW**

0: Reset generated when entering the Shutdown mode
1: No reset generated when entering the Shutdown mode

Bit 13 **nRST_STDBY**

0: Reset generated when entering the Standby mode
1: No reset generate when entering the Standby mode

Bit 12 **nRST_STOP**

0: Reset generated when entering the Stop mode
1: No reset generated when entering the Stop mode

Bit 11 Reserved, must be kept cleared

Bits10:8 **BOR_LEV:** BOR reset Level

These bits contain the VDD supply level threshold that activates/releases the reset.

000: BOR Level 0. Reset level threshold is around 1.7 V
001: BOR Level 1. Reset level threshold is around 2.0 V
010: BOR Level 2. Reset level threshold is around 2.2 V
011: BOR Level 3. Reset level threshold is around 2.5 V
100: BOR Level 4. Reset level threshold is around 2.8 V

Bits 7:0 **RDP:** Read protection level

0xAA: Level 0, read protection not active
0xCC: Level 2, chip read protection active
Others: Level 1, memories read protection active

Note: Take care about PCROP_RDP configuration in Level 1. Refer to Section : Level 1: Read protection for more details.

3.7.9 Flash PCROP Start address register (FLASH_PCROP1SR)

Address offset: 0x24

Reset value: 0xFFFF XXXX

Access: no wait state when no Flash memory operation is on going, word, half-word access

31	30	29	28	27	26	25	24	23	22	21	20	19	18	17	16
Res.	Res.	Res.	Res.	Res.	Res.	Res.	Res.	Res.	Res.	Res.	Res.	Res.	Res.	Res.	Res.
15	14	13	12	11	10	9	8	7	6	5	4	3	2	1	0
PCROP1_STRT[15:0]															
rw	rw	rw	rw	rw	rw	rw	rw	rw	rw	rw	rw	rw	rw	rw	rw

Bits 31:16 Reserved, must be kept cleared

Bits 15:0 **PCROP1_STRT:** PCROP area start offset

PCROP1_STRT contains the first double-word of the PCROP area.

3.7.10 Flash PCROP End address register (FLASH_PCROP1ER)

Address offset: 0x28

Reset value: 0xX000 XXXX

Access: no wait state when no Flash memory operation is on going, word, half-word access. PCROP_RDP bit can be accessed with byte access

31	30	29	28	27	26	25	24	23	22	21	20	19	18	17	16
PCROP_RDP	Res.	Res.	Res.	Res.	Res.	Res.	Res.	Res.	Res.	Res.	Res.	Res.	Res.	Res.	Res.
rs															
15	14	13	12	11	10	9	8	7	6	5	4	3	2	1	0
PCROP1_END[15:0]															
rw	rw	rw	rw	rw	rw	rw	rw	rw	rw	rw	rw	rw	rw	rw	rw

Bit 31 **PCROP_RDP:** PCROP area preserved when RDP level decreased

This bit is set only. It is reset after a full mass erase due to a change of RDP from Level 1 to Level 0.

0: PCROP area is not erased when the RDP level is decreased from Level 1 to Level 0.

1: PCROP area is erased when the RDP level is decreased from Level 1 to Level 0 (full mass erase).

Bits 30:16 Reserved, must be kept cleared

Bits 15:0 **PCROP1_END:** PCROP area end offset

PCROP1_END contains the last double-word of the PCROP area.

3.7.11 Flash WRP area A address register (FLASH_WRP1AR)

Address offset: 0x2C

Reset value: 0x00XX 00XX

Access: no wait state when no Flash memory operation is on going, word, half-word and byte access

31	30	29	28	27	26	25	24	23	22	21	20	19	18	17	16
Res.	Res.	Res.	Res.	Res.	Res.	Res.	Res.	WRP1A_END[7:0]							
								rw	rw	rw	rw	rw	rw	rw	rw
15	14	13	12	11	10	9	8	7	6	5	4	3	2	1	0
Res.	Res.	Res.	Res.	Res.	Res.	Res.	Res.	WRP1A_STRT[7:0]							
								rw	rw	rw	rw	rw	rw	rw	rw

Bits 31:24 Reserved, must be kept cleared

Bits 23:16 **WRP1A_END:** WRP first area “A” end offset

WRP1A_END contains the last page of the WRP first area.

Bits 15:8 Reserved, must be kept cleared

Bits 7:0 **WRP1A_STRT:** WRP first area “A” start offset

WRP1A_STRT contains the first page of the WRP first area.

3.7.12 Flash WRP area B address register (FLASH_WRP1BR)

Address offset: 0x30

Reset value: 0x00XX 00XX

Access: no wait state when no Flash memory operation is on going, word, half-word and byte access

31	30	29	28	27	26	25	24	23	22	21	20	19	18	17	16
Res.	Res.	Res.	Res.	Res.	Res.	Res.	Res.	WRP1B_END[7:0]							
								rw	rw	rw	rw	rw	rw	rw	rw
15	14	13	12	11	10	9	8	7	6	5	4	3	2	1	0
Res.	Res.	Res.	Res.	Res.	Res.	Res.	Res.	WRP1B_STRT[7:0]							
								rw	rw	rw	rw	rw	rw	rw	rw

Bits 31:24 Reserved, must be kept cleared

Bits 23:16 **WRP1B_END:** WRP second area “B” end offset
WRP1B_END contains the last page of the WRP second area.

Bits 15:8 Reserved, must be kept cleared

Bits 7:0 **WRP1B_STRT:** WRP second area “B” start offset
WRP1B_STRT contains the first page of the WRP second area.

3.7.13 FLASH register map

Table 14. Flash interface - register map and reset values

Offset	Register	31	30	29	28	27	26	25	24	23	22	21	20	19	18	17	16	15	14	13	12	11	10	9	8	7	6	5	4	3	2	1	0
0x00	FLASH_ACR	Res.	Res.	Res.	Res.	Res.	Res.	Res.	Res.	Res.	Res.	Res.	Res.	Res.	Res.	Res.	Res.	Res.	SLEEP_PD	RUN_PD	DCRST	ICRST	DCEN	ICEN	PRFTEN	Res.	Res.	Res.	Res.	Res.	LATENCY [2:0]		
	Reset value																		0	0	0	0	1	1	0						0	0	0
0x04	FLASH_ PDKEYR	PDKEYR[31:0]																															
	Reset value	0	0	0	0	0	0	0	0	0	0	0	0	0	0	0	0	0	0	0	0	0	0	0	0	0	0	0	0	0	0	0	0
0x08	FLASH_KEYR	KEYR[31:0]																															
	Reset value	0	0	0	0	0	0	0	0	0	0	0	0	0	0	0	0	0	0	0	0	0	0	0	0	0	0	0	0	0	0	0	0
0x0C	FLASH_OPT KEYR	OPTKEYR[31:0]																															
	Reset value	0	0	0	0	0	0	0	0	0	0	0	0	0	0	0	0	0	0	0	0	0	0	0	0	0	0	0	0	0	0	0	0
0x10	FLASH_SR	Res.	Res.	Res.	Res.	Res.	Res.	Res.	Res.	Res.	Res.	Res.	Res.	Res.	Res.	PEMPTY	BSY	OPTVERR	RDERR	Res.	Res.	Res.	Res.	FASTERR	MISERR	PGSERR	SIZERR	PGAERR	WRPERR	PROGERR	Res.	OPERR	EOP
	Reset value															X	0	0	0					0	0	0	0	0	0	0		0	0
0x14	FLASH_CR	LOCK	OPTLOCK	Res.	Res.	OBL_LAUNCH	RDERRIE	ERRIE	EOPIE	Res.	Res.	Res.	Res.	Res.	FSTPG	OPTSTRT	STRT	Res.	Res.	Res.	Res.	Res.	PNB[7:0]								MER1	PER	PG
	Reset value	1	1			0	0	0	0						0	0	0						0	0	0	0	0	0	0	0	0	0	0
0x18	FLASH_ECCR	ECCD	ECCC	Res.	Res.	Res.	Res.	Res.	ECCCIE	Res.	Res.	Res.	SYSF_ECC	Res.	ADDR_ECC[18:0]																		
	Reset value	0	0						0				0		0	0	0	0	0	0	0	0	0	0	0	0	0	0	0	0	0	0	0
0x20	FLASH_OPTR	Res.	Res.	Res.	Res.	nBOOT0	nSWBOOT0	SRAM2_RST	SRAM2_PE	nBOOT1	Res.	Res.	Res.	WWDG_SW	IWDG_STBY	IWDG_STOP	IWDG_SW	Res.	nRST_SHDW	nRST_STDBY	nRST_STOP	Res.	BOR_ LEV[2:0]			RDP[7:0]							
	Reset value					x	x	X	X	X				X	X	X	X		X	X	X		X	X	X	X	X	X	X	X	X	X	X
0x24	FLASH_ PCROP1SR	Res.	Res.	Res.	Res.	Res.	Res.	Res.	Res.	Res.	Res.	Res.	Res.	Res.	Res.	Res.	Res.	PCROP1_STRT[15:0]															
	Reset value																	X	X	X	X	X	X	X	X	X	X	X	X	X	X	X	X
0x28	FLASH_ PCROP1ER	PCROP_RDP	Res.	Res.	Res.	Res.	Res.	Res.	Res.	Res.	Res.	Res.	Res.	Res.	Res.	Res.	Res.	PCROP1_END[15:0]															
	Reset value	x																X	X	X	X	X	X	X	X	X	X	X	X	X	X	X	X

Table 14. Flash interface - register map and reset values (continued)

Offset	Register	31	30	29	28	27	26	25	24	23	22	21	20	19	18	17	16	15	14	13	12	11	10	9	8	7	6	5	4	3	2	1	0
0x2C	FLASH_ WRP1AR	Res.	Res.	Res.	Res.	Res.	Res.	Res.	Res.	WRP1A_END[7:0]								Res.	Res.	Res.	Res.	Res.	Res.	Res.	Res.	WRP1A_STRT[7:0]							
	Reset value									X	X	X	X	X	X	X	X									X	X	X	X	X	X	X	X
0x30	FLASH_ WRP1BR	Res.	Res.	Res.	Res.	Res.	Res.	Res.	Res.	WRP1B_END[7:0]								Res.	Res.	Res.	Res.	Res.	Res.	Res.	Res.	WRP1B_STRT[7:0]							
	Reset value									X	X	X	X	X	X	X	X									X	X	X	X	X	X	X	X

Refer to *Section 2.2.2 on page 62* for the register boundary addresses.

4 Firewall (FW)

4.1 Introduction

The Firewall is made to protect a specific part of code or data into the Non-Volatile Memory, and/or to protect the Volatile data into the SRAM 1 from the rest of the code executed outside the protected area.

4.2 Firewall main features

- The code to protect by the Firewall (Code Segment) may be located in:
  - The Flash memory map
  - The SRAM 1 memory, if declared as an executable protected area during the Firewall configuration step.
- The data to protect can be located either
  - in the Flash memory (non-volatile data segment)
  - in the SRAM 1 memory (volatile data segment)

The software can access these protected areas once the Firewall is opened. The Firewall can be opened or closed using a mechanism based on “call gate” (Refer to *Opening the Firewall*).

The start address of each segment and its respective length must be configured before enabling the Firewall (Refer to *Section 4.3.5: Firewall initialization*).

Each illegal access into these protected segments (if the Firewall is enabled) generates a reset which immediately kills the detected intrusion.

Any DMA access to protected segments is forbidden whatever the Firewall state (opened or closed). It is considered as an illegal access and generates a reset.

4.3 Firewall functional description

4.3.1 Firewall AMBA bus snoop

The Firewall peripheral is snooping the AMBA buses on which the memories (volatile and non-volatile) are connected. A global architecture view is illustrated in *Figure 5*.

Figure 5. STM32L431/433/443 firewall connection schematics

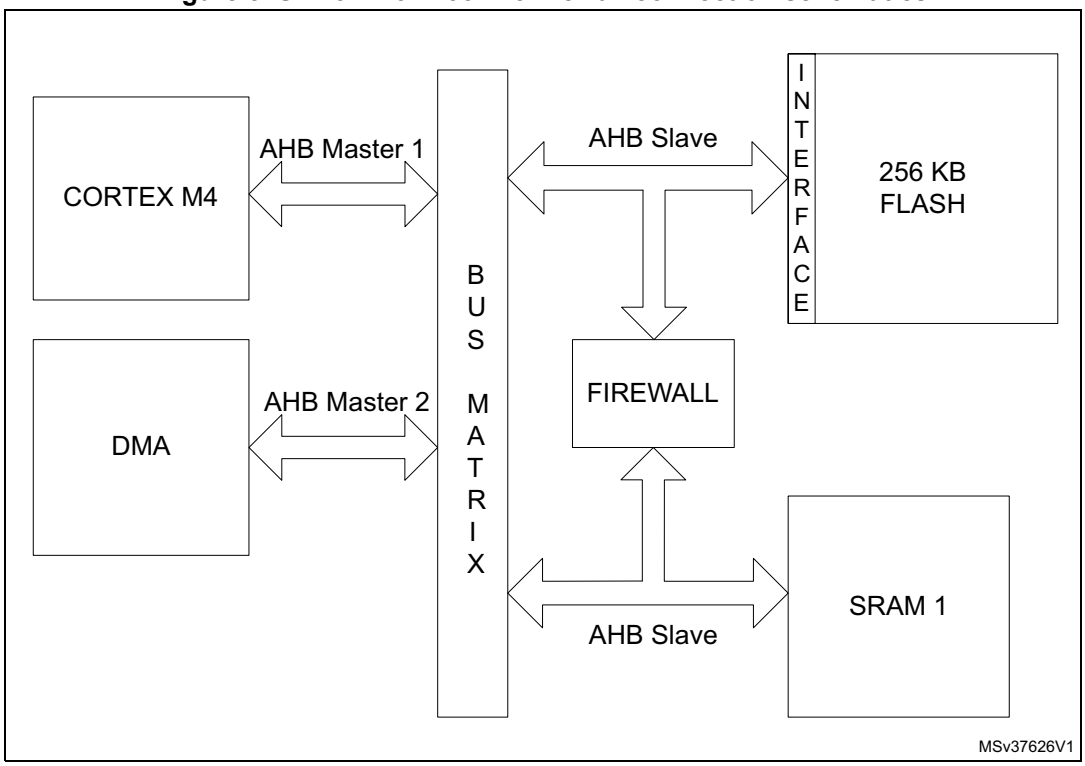

4.3.2 Functional requirements

There are several requirements to guaranty the highest security level by the application code/data which needs to be protected by the Firewall and to avoid unwanted Firewall alarm (reset generation).

Debug consideration

In debug mode, if the Firewall is opened, the accesses by the debugger to the protected segments are not blocked. For this reason, the Read out level 2 protection must be active in conjunction with the Firewall implementation.

If the debug is needed, it is possible to proceed in the following way:

- A dummy code having the same API as the protected code may be developed during the development phase of the final user code. This dummy code may send back coherent answers (in terms of function and potentially timing if needed), as the protected code should do in production phase.
- In the development phase, the protected code can be given to the customer-end under NDA agreement and its software can be developed in level 0 protection. The customer-

end code needs to embed an IAP located in a write protected segment in order to allow future code updates when the production parts will be Level 2 ROP.

Write protection

In order to offer a maximum security level, the following points need to be respected:

- It is mandatory to keep a write protection on the part of the code enabling the Firewall. This activation code should be located outside the segments protected by the Firewall.
- The write protection is also mandatory on the code segment protected by the Firewall.
- The sector including the reset vector must be write-protected.

Interruptions management

The code protected by the Firewall must not be interruptible. It is up to the user code to disable any interrupt source before executing the code protected by the Firewall. If this constraint is not respected, if an interruption comes while the protected code is executed (Firewall opened), the Firewall will be closed as soon as the interrupt subroutine is executed. When the code returns back to the protected code area, a Firewall alarm will raise since the “call gate” sequence will not be applied and a reset will be generated.

Concerning the interrupt vectors and the first user sector in the Flash memory:

- If the first user sector (including the reset vector) is protected by the Firewall, the NVIC vector should be reprogrammed outside the protected segment.
- If the first user sector is not protected by the Firewall, the interrupt vectors may be kept at this location.

There is no interruption generated by the Firewall.

4.3.3 Firewall segments

The Firewall has been designed to protect three different segment areas:

Code segment

This segment is located into the Flash memory. It should contain the code to execute which requires the Firewall protection. The segment must be reached using the “call gate” entry sequence to open the Firewall. A system reset is generated if the “call gate” entry sequence is not respected (refer to *Opening the Firewall*) and if the Firewall is enabled using the FWDIS bit in the system configuration register. The length of the segment and the segment base address must be configured before enabling the Firewall (refer to *Section 4.3.5: Firewall initialization*).

Non-volatile data segment

This segment contains non-volatile data used by the protected code which must be protected by the Firewall. The access to this segment is defined into *Section 4.3.4: Segment accesses and properties*. The Firewall must be opened before accessing the data in this area. The Non-Volatile data segment should be located into the Flash memory. The segment length and the base address of the segment must be configured before enabling the Firewall (refer to *Section 4.3.5: Firewall initialization*).

Volatile data segment

Volatile data used by the protected code located into the code segment must be defined into the SRAM 1 memory. The access to this segment is defined into the *Section 4.3.4: Segment accesses and properties*. Depending on the Volatile data segment configuration, the Firewall must be opened or not before accessing this segment area. The segment length and the base address of the segment as well as the segment options must be configured before enabling the Firewall (refer to *Section 4.3.5: Firewall initialization*).

The Volatile data segment can also be defined as executable (for the code execution) or shared using two bit of the Firewall configuration register (bit VDS for the volatile data sharing option and bit VDE for the volatile data execution capability). For more details, refer to *Table 15*.

4.3.4 Segment accesses and properties

All DMA accesses to the protected segments are forbidden, whatever the Firewall state, and generate a system reset.

Segment access depending on the Firewall state

Each of the three segments has specific properties which are presented in *Table 15*.

Table 15. Segment accesses according to the Firewall state

Segment	Firewall opened access allowed	Firewall closed access allowed	Firewall disabled access allowed
Code segment	Read and execute	No access allowed. Any access to the segment (except the “call gate” entry) generates a system reset	All accesses are allowed (according to the Flash sector protection properties in which the code is located)
Non-volatile data segment	Read and write	No access allowed	All accesses are allowed (according to the Flash sector protection properties in which the code is located)
Volatile data segment	Read and Write Execute if VDE = 1 and VDS = 0 into the Firewall configuration register	No access allowed if VDS = 0 and VDE = 0 into the Firewall configuration register Read/write/execute accesses allowed if VDS = 1 (whatever VDE bit value) Execute if VDE = 1 and VDS = 0 but with a “call gate” entry to open the Firewall at first.	All accesses are allowed

The Volatile data segment is a bit different from the two others. The segment can be:

- Shared (VDS bit in the register)

  It means that the area and the data located into this segment can be shared between the protected code and the user code executed in a non-protected area. The access is allowed whether the Firewall is opened or closed or disabled.

  The VDS bit gets priority over the VDE bit, this last bit value being ignored in such a case. It means that the Volatile data segment can execute parts of code located there without any need to open the Firewall before executing the code.

- Execute

  The VDE bit is considered as soon as the VDS bit = 0 in the FW_CR register. If the VDS bit = 1, refer to the description above on the Volatile data segment sharing. If VDS = 0 and VDE = 1, the Volatile data segment is executable. To avoid a system reset generation from the Firewall, the “call gate” sequence should be applied on the Volatile data segment to open the Firewall as an entry point for the code execution.

Segments properties

Each segment has a specific length register to define the segment size to be protected by the Firewall: CSL register for the Code segment length register, NVDSL for the Non-volatile data segment length register, and VDSL register for the Volatile data segment length register. Granularity and area ranges for each of the segments are presented in *Table 16*.

Table 16. Segment granularity and area ranges

Segment	Granularity	Area range
Code segment	256 bytes	1024 KBytes - 256 Bytes
Non-volatile data segment	256 bytes	1024 KBytes - 256 Bytes
Volatile data segment	64 bytes	96 KBytes - 64 Bytes

4.3.5 Firewall initialization

The initialization phase should take place at the beginning of the user code execution (refer to the *Write protection*).

The initialization phase consists of setting up the addresses and the lengths of each segment which needs to be protected by the Firewall. It must be done before enabling the Firewall, because the enabling bit can be written once. Thus, when the Firewall is enabled, it cannot be disabled anymore until the next system reset.

Once the Firewall is enabled, the accesses to the address and length segments are no longer possible. All write attempts are discarded.

A segment defined with a length equal to 0 is not considered as protected by the Firewall. As a consequence, there is no reset generation from the Firewall when an access to the base address of this segment is performed.

After a reset, the Firewall is disabled by default (FWDIS bit in the SYSCFG register is set). It has to be cleared to enable the Firewall feature.

Below is the initialization procedure to follow:

1. Configure the RCC to enable the clock to the Firewall module
2. Configure the RCC to enable the clock of the system configuration registers
3. Set the base address and length of each segment (CSSA, CSL, NVDSSA, NVDSL, VDSSA, VDSL registers)
4. Set the configuration register of the Firewall (FW_CR register)
5. Enable the Firewall clearing the FWDIS bit in the system configuration register.

The Firewall configuration register (FW_CR register) is the only one which can be managed in a dynamic way even if the Firewall is enabled:

- when the Non-Volatile data segment is undefined (meaning the NVDSL register is equal to 0), the accesses to this register are possible whatever the Firewall state (opened or closed).
- when the Non-Volatile data segment is defined (meaning the NVDSL register is different from 0), the accesses to this register are only possible when the Firewall is opened.

4.3.6 Firewall states

The Firewall has three different states as shown in *Figure 6*:

- Disabled: The FWDIS bit is set by default after the reset. The Firewall is not active.
- Closed: The Firewall protects the accesses to the three segments (Code, Non-volatile data, and Volatile data segments).
- Opened: The Firewall allows access to the protected segments as defined in *Section 4.3.4: Segment accesses and properties*.

Figure 6. Firewall functional states

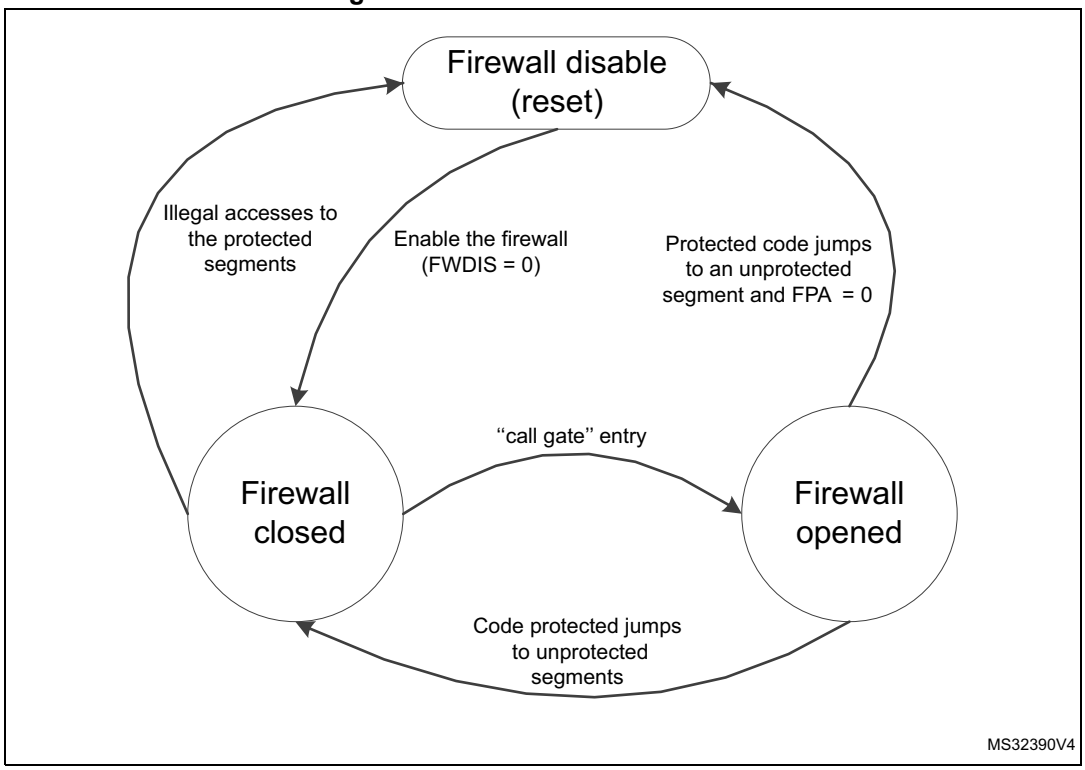

Opening the Firewall

As soon as the Firewall is enabled, it is closed. It means that most of the accesses to the protected segments are forbidden (refer to *Section 4.3.4: Segment accesses and properties*). In order to open the Firewall to interact with the protected segments, it is mandatory to apply the “call gate” sequence described hereafter.

“call gate” sequence

The “call gate” is composed of 3 words located on the first three 32-bit addresses of the base address of the code segment and of the Volatile data segment if it is declared as not shared (VDS = 0) and executable (VDE = 1).

– 1st word: Dummy 32-bit words always closed in order to protect the “call gate” opening from an access due to a prefetch buffer.

– 2nd and 3rd words: 2 specific 32-bit words called “call gate” and always opened.

To open the Firewall, the code currently executed must jump to the 2nd word of the “call gate” and execute the code from this point. The 2nd word and 3rd word execution must not be interrupted by any intermediate instruction fetch; otherwise, the Firewall is not considered open and comes back to a close state. Then, executing the 3rd word after receiving the intermediate instruction fetch would generate a system reset as a consequence.

As soon as the Firewall is opened, the protected segments can be accessed as described in *Section 4.3.4: Segment accesses and properties*.

Closing the Firewall

The Firewall is closed immediately after it is enabled (clearing the FWDIS bit in the system configuration register).

To close the Firewall, the protected code must:

- Write the correct value in the Firewall Pre Arm Flag into the FW_CR register.
- Jump to any executable location outside the Firewall segments.

If the Firewall Pre Arm Flag is not set when the protected code jumps to a non protected segment, a reset is generated. This control bit is an additional protection to avoid an undesired attempt to close the Firewall with the private information not yet cleaned (see the note below).

For security reasons, following the application for which the Firewall is used, it is advised to clean all private information from CPU registers and hardware cells.

4.4 Firewall registers

4.4.1 Code segment start address (FW_CSSA)

Address offset: 0x00

Reset value: 0x0000 0000

31	30	29	28	27	26	25	24	23	22	21	20	19	18	17	16
Res.	Res.	Res.	Res.	Res.	Res.	Res.	Res.	ADD[23:16]							
								rw							

15	14	13	12	11	10	9	8	7	6	5	4	3	2	1	0
ADD[15:8]								Res	Res	Res	Res	Res	Res	Res	Res
rw															

Bits 31:24 Reserved, must be kept at reset value.

Bits 23:8 **ADD[23:8]:** code segment start address

The LSB bits of the start address (bit 7:0) are reserved and forced to 0 in order to allow a 256-byte granularity.

Note: These bits can be written only before enabling the Firewall. Refer to Section 4.3.5: Firewall initialization.

Bits 7:0 Reserved, must be kept at the reset value.

4.4.2 Code segment length (FW_CSL)

Address offset: 0x04

Reset value: 0x0000 0000

31	30	29	28	27	26	25	24	23	22	21	20	19	18	17	16
Res.	Res.	Res.	Res.	Res.	Res.	Res.	Res.	Res.	Res.	LENG[21:16]					
										rw					

15	14	13	12	11	10	9	8	7	6	5	4	3	2	1	0
LENG15:8]								Res.	Res.	Res.	Res.	Res.	Res.	Res.	Res.
rw															

Bits 31:22 Reserved, must be kept at the reset value.

Bits 21:8 **LENG[21:8]**: code segment length

LENG[21:8] selects the size of the code segment expressed in bytes but is a multiple of 256 bytes.

The segment area is defined from {ADD[23:8],0x00} to {ADD[23:8]+LENG[21:8], 0x00} - 0x01

Note: If LENG[21:8] = 0 after enabling the Firewall, this segment is not defined, thus not protected by the Firewall.

These bits can only be written before enabling the Firewall. Refer to Section 4.3.5: Firewall initialization.

Bits 7:0 Reserved, must be kept at the reset value.

4.4.3 Non-volatile data segment start address (FW_NVDSSA)

Address offset: 0x08

Reset value: 0x0000 0000

31	30	29	28	27	26	25	24	23	22	21	20	19	18	17	16
Res.	Res.	Res.	Res.	Res.	Res.	Res.	Res.	ADD[23:16]							
								rw							

15	14	13	12	11	10	9	8	7	6	5	4	3	2	1	0
ADD[15:8]								Res	Res	Res	Res	Res	Res	Res	Res
rw															

Bits 31:24 Reserved, must be kept at the reset value.

Bits 23:8 **ADD[23:8]:** Non-volatile data segment start address

The LSB bits of the start address (bit 7:0) are reserved and forced to 0 in order to allow a 256-byte granularity.

Note: These bits can only be written before enabling the Firewall. Refer to Section 4.3.5: Firewall initialization.

Bits 7:0 Reserved, must be kept at the reset value.

4.4.4 Non-volatile data segment length (FW_NVDSL)

Address offset: 0x0C

Reset value: 0x0000 0000

31	30	29	28	27	26	25	24	23	22	21	20	19	18	17	16
Res.	Res.	Res.	Res.	Res.	Res.	Res.	Res.	Res.	Res.	LENG[21:16]					
										rw					

15	14	13	12	11	10	9	8	7	6	5	4	3	2	1	0
LENG[15:8]								Res.	Res.	Res.	Res.	Res.	Res.	Res.	Res.
rw															

Bits 31:22 Reserved, must be kept at the reset value.

Bits 21:8 **LENG[21:8]**: Non-volatile data segment length

LENG[21:8] selects the size of the Non-volatile data segment expressed in bytes but is a multiple of 256 bytes.

The segment area is defined from {ADD[23:8],0x00} to {ADD[23:8]+LENG[21:8], 0x00} - 0x01

Note: If LENG[21:8] = 0 after enabling the Firewall, this segment is not defined, thus not protected by the Firewall.

These bits can only be written before enabling the Firewall. Refer to Section 4.3.5: Firewall initialization.

Bits 7:0 Reserved, must be kept at the reset value.

4.4.5 Volatile data segment start address (FW_VDSSA)

Address offset: 0x10

Reset value: 0x0000 0000

31	30	29	28	27	26	25	24	23	22	21	20	19	18	17	16
Res.	Res.	Res.	Res.	Res.	Res.	Res.	Res.	Res.	Res.	Res.	Res.	Res.	Res.	Res.	ADD [16]
															rw

15	14	13	12	11	10	9	8	7	6	5	4	3	2	1	0
ADD[15:6]										Res	Res	Res	Res	Res	Res
rw															

Bits 31:17 Reserved, must be kept at the reset value.

Bits 16:6 **ADD[16:6]:** Volatile data segment start address

The LSB bits of the start address (bit 5:0) are reserved and forced to 0 in order to allow a 64-byte granularity.

Note: These bits can only be written before enabling the Firewall. Refer to Section 4.3.5: Firewall initialization

Bits 5:0 Reserved, must be kept at the reset value.

4.4.6 Volatile data segment length (FW_VDSL)

Address offset: 0x14

Reset value: 0x0000 0000

31	30	29	28	27	26	25	24	23	22	21	20	19	18	17	16
Res.	Res.	Res.	Res.	Res.	Res.	Res.	Res.	Res.	Res.	Res.	Res.	Res.	Res.	Res.	LENG [16]
															rw

15	14	13	12	11	10	9	8	7	6	5	4	3	2	1	0
LENG[15:6]										Res.	Res.	Res.	Res.	Res.	Res.
rw															

Bits 31:17 Reserved, must be kept at the reset value.

Bits 16:6 **LENG[16:6]**: volatile data segment length

LENG[16:6] selects the size of the volatile data segment expressed in bytes but is a multiple of 64 bytes.

The segment area is defined from {ADD[16:6],0x00} to {ADD[16:6]+LENG[16:6], 0x00} - 0x01

Note: If LENG[16:6] = 0 after enabling the Firewall, this segment is not defined, thus not protected by the Firewall.

These bits can only be written before enabling the Firewall. Refer to Section 4.3.5: Firewall initialization.

Bits 5:0 Reserved, must be kept at the reset value.

4.4.7 Configuration register (FW_CR)

Address offset: 0x20

Reset value: 0x0000 0000

31	30	29	28	27	26	25	24	23	22	21	20	19	18	17	16
Res.	Res.	Res.	Res.	Res.	Res.	Res.	Res.	Res.	Res.	Res.	Res.	Res.	Res.	Res.	Res.

15	14	13	12	11	10	9	8	7	6	5	4	3	2	1	0
Res.	Res.	Res.	Res.	Res.	Res.	Res.	Res.	Res.	Res.	Res.	Res.	Res.	VDE	VDS	FPA
													rw	rw	rw

Bits 31:3 Reserved, must be kept at the reset value.

Bit 2 **VDE**: Volatile data execution

0: Volatile data segment cannot be executed if VDS = 0

1: Volatile data segment is declared executable whatever VDS bit value

When VDS = 1, this bit has no meaning. The Volatile data segment can be executed whatever the VDE bit value.

If VDS = 1, the code can be executed whatever the Firewall state (opened or closed)

If VDS = 0, the code can only be executed if the Firewall is opened or applying the “call gate” entry sequence if the Firewall is closed.

Refer to *Segment access depending on the Firewall state*.

Bit 1 **VDS**: Volatile data shared

0: Volatile data segment is not shared and cannot be hit by a non protected executable code when the Firewall is closed. If it is accessed in such a condition, a system reset will be generated by the Firewall.

1: Volatile data segment is shared with non protected application code. It can be accessed whatever the Firewall state (opened or closed).

Refer to *Segment access depending on the Firewall state*.

Bit 0 **FPA**: Firewall prearm

0: any code executed outside the protected segment when the Firewall is opened will generate a system reset.

1: any code executed outside the protected segment will close the Firewall.

Refer to *Closing the Firewall*.

This register is protected in the same way as the Non-volatile data segment (refer to *Section 4.3.5: Firewall initialization)*.

4.4.8 Firewall register map

The table below provides the Firewall register map and reset values.

Table 17. Firewall register map and reset values

Offset	Register	31	30	29	28	27	26	25	24	23	22	21	20	19	18	17	16	15	14	13	12	11	10	9	8	7	6	5	4	3	2	1	0
0x0	FW_CSSA	Res.	Res.	Res.	Res.	Res.	Res.	Res.	Res.	ADD																Res.	Res.	Res.	Res.	Res.	Res.	Res.	Res.
	Reset Value									0	0	0	0	0	0	0	0	0	0	0	0	0	0	0	0								
0x4	FW_CSL	Res.	Res.	Res.	Res.	Res.	Res.	Res.	Res.	Res.	Res.	LENG														Res.	Res.	Res.	Res.	Res.	Res.	Res.	Res.
	Reset Value											0	0	0	0	0	0	0	0	0	0	0	0	0	0								
0x8	FW_NVDSSA	Res.	Res.	Res.	Res.	Res.	Res.	Res.	Res.	ADD																Res.	Res.	Res.	Res.	Res.	Res.	Res.	Res.
	Reset Value									0	0	0	0	0	0	0	0	0	0	0	0	0	0	0	0								
0xC	FW_NVDSL	Res.	Res.	Res.	Res.	Res.	Res.	Res.	Res.	Res.	Res.	LENG														Res.	Res.	Res.	Res.	Res.	Res.	Res.	Res.
	Reset Value											0	0	0	0	0	0	0	0	0	0	0	0	0	0								
0x10	FW_VDSSA	Res.	Res.	Res.	Res.	Res.	Res.	Res.	Res.	Res.	Res.	Res.	Res.	Res.	Res.	Res.	ADD											Res.	Res.	Res.	Res.	Res.	Res.
	Reset Value																0	0	0	0	0	0	0	0	0	0	0						
0x14	FW_VDSL	Res.	Res.	Res.	Res.	Res.	Res.	Res.	Res.	Res.	Res.	Res.	Res.	Res.	Res.	Res.	LENG											Res.	Res.	Res.	Res.	Res.	Res.
	Reset Value																0	0	0	0	0	0	0	0	0	0	0						
0x18		Res.	Res.	Res.	Res.	Res.	Res.	Res.	Res.	Res.	Res.	Res.	Res.	Res.	Res.	Res.	Res.	Res.	Res.	Res.	Res.	Res.	Res.	Res.	Res.	Res.	Res.	Res.	Res.	Res.	Res.	Res.	Res.
	Reset Value																																
0x1C		Res.	Res.	Res.	Res.	Res.	Res.	Res.	Res.	Res.	Res.	Res.	Res.	Res.	Res.	Res.	Res.	Res.	Res.	Res.	Res.	Res.	Res.	Res.	Res.	Res.	Res.	Res.	Res.	Res.	Res.	Res.	Res.
	Reset Value																																
0x20	FW_CR	Res.	Res.	Res.	Res.	Res.	Res.	Res.	Res.	Res.	Res.	Res.	Res.	Res.	Res.	Res.	Res.	Res.	Res.	Res.	Res.	Res.	Res.	Res.	Res.	Res.	Res.	Res.	Res.	Res.	VDE	VDS	FPA
	Reset Value																														0	0	0

Refer to *Section 2.2.2 on page 62* for the register boundary addresses.

5 Power control (PWR)

5.1 Power supplies

The STM32L4x devices require a 1.71 V to 3.6 V V_{DD} operating voltage supply. Several independent supplies (V_{DDA}, V_{DDUSB}[(a)], V_{LCD}[(a)]), can be provided for specific peripherals:

- V_{DD} = 1.71 V to 3.6 V

  V_{DD} is the external power supply for the I/Os, the internal regulator and the system analog such as reset, power management and internal clocks. It is provided externally through VDD pins.

- V_{DDA} = 1.62 V (ADCs/COMPs) / 1.8 V (DACs/OPAMPs) to 2.4 V (VREFBUF) to 3.6 V

  V_{DDA} is the external analog power supply for A/D converters, D/A converters, voltage reference buffer, operational amplifiers and comparators. The V_{DDA} voltage level is independent from the V_{DD} voltage and should preferably be connected to V_{DD} when these peripherals are not used.

- V_{DDUSB}[(a)] = 3.0 V to 3.6 V

  V_{DDUSB} is the external independent power supply for USB transceivers. The V_{DDUSB} voltage level is independent from the V_{DD} voltage and should preferably be connected to V_{DD} when the USB is not used.

- V_{LCD}[(a)] = 2.5 V to 3.6 V

  The LCD controller can be powered either externally through VLCD pin, or internally from an internal voltage generated by the embedded step-up converter. VLCD is multiplexed with PC3 which can be used as GPIO when the LCD is not used.

- V_{BAT} = 1.55 V to 3.6 V

  V_{BAT} is the power supply for RTC, external clock 32 kHz oscillator and backup registers (through power switch) when V_{DD} is not present.

- V_{REF-}, V_{REF+}

  V_{REF+} is the input reference voltage for ADCs and DACs. It is also the output of the internal voltage reference buffer when enabled.

  When V_{DDA} < 2 V V_{REF+} must be equal to V_{DDA}.

  When V_{DDA} ≥ 2 V V_{REF+} must be between 2 V and V_{DDA}.

  V_{REF+} can be grounded when ADC and DAC are not active.

  The internal voltage reference buffer supports two output voltages, which are configured with VRS bit in the VREFBUF_CSR register:

  – V_{REF+} around 2.048 V. This requires V_{DDA} equal to or higher than 2.4 V.

  – V_{REF+} around 2.5 V. This requires V_{DDA} equal to or higher than 2.8 V.

  VREF- and VREF+ pins are not available on all packages. When not available, they are bonded to VSSA and VDDA, respectively.

  When the VREF+ is double-bonded with VDDA in a package, the internal voltage reference buffer is not available and must be kept disable (refer to datasheet for packages pinout description).

  V_{REF-} must always be equal to V_{SSA}.

a. Not available for STM32L431xx devices.

An embedded linear voltage regulator is used to supply the internal digital power V_{CORE}. V_{CORE} is the power supply for digital peripherals, SRAM1 and SRAM2. The Flash is supplied by V_{CORE} and V_{DD}.

Figure 7. Power supply overview

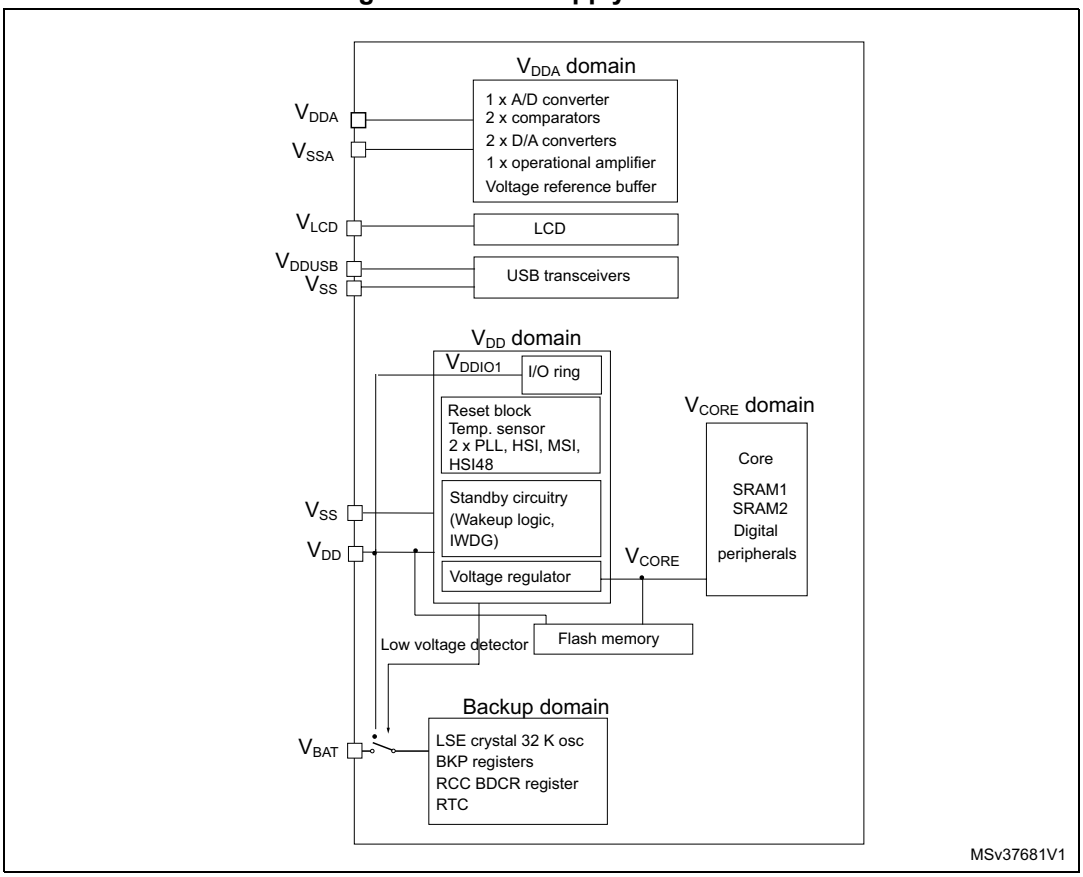

5.1.1 Independent analog peripherals supply

To improve ADC and DAC conversion accuracy and to extend the supply flexibility, the analog peripherals have an independent power supply which can be separately filtered and shielded from noise on the PCB.

- The analog peripherals voltage supply input is available on a separate V_{DDA} pin.
- An isolated supply ground connection is provided on V_{SSA} pin.

The V_{DDA} supply voltage can be different from V_{DD}. The presence of V_{DDA} must be checked before enabling any of the analog peripherals supplied by V_{DDA} (A/D converter, D/C converter, comparators, operational amplifier, voltage reference buffer).

The V_{DDA} supply can be monitored by the Peripheral Voltage Monitoring, and compared with two thresholds (1.65 V for PVM3 or 2.2 V for PVM4), refer to *Section 5.2.3: Peripheral Voltage Monitoring (PVM)* for more details.

When a single supply is used, V_{DDA} can be externally connected to V_{DD} through the external filtering circuit in order to ensure a noise-free V_{DDA} reference voltage.

ADC and DAC reference voltage

To ensure a better accuracy on low-voltage inputs and outputs, the user can connect to V_{REF+} a separate reference voltage lower than V_{DDA}. V_{REF+} is the highest voltage, represented by the full scale value, for an analog input (ADC) or output (DAC) signal.

V_{REF+} can be provided either by an external reference of by an internal buffered voltage reference (VREFBUF).

The internal voltage reference is enabled by setting the ENVR bit in the *VREFBUF control and status register (VREFBUF_CSR)*. The voltage reference is set to 2.5 V when the VRS bit is set and to 2.048 V when the VRS bit is cleared. The internal voltage reference can also provide the voltage to external components through V_{REF+} pin. Refer to the device datasheet and to *Section 18: Voltage reference buffer (VREFBUF)* for further information.

5.1.2 Independent USB transceivers supply[(a)]

The USB transceivers are supplied from a separate V_{DDUSB} power supply pin. V_{DDUSB} range is from 3.0 V to 3.6 V and is completely independent from V_{DD} or V_{DDA}.

After reset, the USB features supplied by V_{DDUSB} are logically and electrically isolated and therefore are not available. The isolation must be removed before using the USB FS peripheral, by setting the USV bit in the PWR_CR2 register, once the V_{DDUSB} supply is present.

The V_{DDUSB} supply is monitored by the Peripheral Voltage Monitoring (PVM1) and compared with the internal reference voltage (V_{REFINT}, around 1.2 V), refer to *Section 5.2.3: Peripheral Voltage Monitoring (PVM)* for more details.

5.1.3 Independent LCD supply[(a)]

The VLCD pin is provided to control the contrast of the glass LCD. This pin can be used in two ways:

- It can receive from an external circuitry the desired maximum voltage that is provided on segment and common lines to the glass LCD by the microcontroller.
- It can also be used to connect an external capacitor that is used by the microcontroller for its voltage step-up converter. This step-up converter is controlled by software to provide the desired voltage to segment and common lines of the glass LCD.

The voltage provided to segment and common lines defines the contrast of the glass LCD pixels. This contrast can be reduced when you configure the dead time between frames.

- When an external power supply is provided to the VLCD pin, it should range from 2.5 V to 3.6 V. It does not depend on V_{DD}.
- When the LCD is based on the internal step-up converter, the VLCD pin should be connected to a capacitor (see the product datasheet for further information).

a. Not available for STM32L431xx devices.

5.1.4 Battery backup domain

To retain the content of the Backup registers and supply the RTC function when V_{DD} is turned off, the V_{BAT} pin can be connected to an optional backup voltage supplied by a battery or by another source.

The V_{BAT} pin powers the RTC unit, the LSE oscillator and the PC13 to PC15 I/Os, allowing the RTC to operate even when the main power supply is turned off. The switch to the V_{BAT} supply is controlled by the power-down reset embedded in the Reset block.

Warning: **During $t_{RSTTEMPO}$ (temporization at V_{DD} startup) or after a PDR has been detected, the power switch between V_{BAT} and V_{DD} remains connected to V_{BAT}.**
During the startup phase, if V_{DD} is established in less than $t_{RSTTEMPO}$ (refer to the datasheet for the value of $t_{RSTTEMPO}$) and $V_{DD} > V_{BAT} + 0.6$ V, a current may be injected into V_{BAT} through an internal diode connected between V_{DD} and the power switch (V_{BAT}).
If the power supply/battery connected to the V_{BAT} pin cannot support this current injection, it is strongly recommended to connect an external low-drop diode between this power supply and the V_{BAT} pin.

If no external battery is used in the application, it is recommended to connect V_{BAT} externally to V_{DD} with a 100 nF external ceramic decoupling capacitor.

When the backup domain is supplied by V_{DD} (analog switch connected to V_{DD}), the following pins are available:

- PC13, PC14 and PC15, which can be used as GPIO pins
- PC13, PC14 and PC15, which can be configured by RTC or LSE (refer to *Section 33.3: RTC functional description on page 920*)
- PA0/RTC_TAMP2 and PE6/RTC_TAMP3 when they are configured by the RTC as tamper pins

Note: Due to the fact that the analog switch can transfer only a limited amount of current (3 mA), the use of GPIO PC13 to PC15 in output mode is restricted: the speed has to be limited to 2 MHz with a maximum load of 30 pF and these I/Os must not be used as a current source (e.g. to drive a LED).

When the backup domain is supplied by V_{BAT} (analog switch connected to V_{BAT} because V_{DD} is not present), the following functions are available:

- PC13, PC14 and PC15 can be controlled only by RTC or LSE (refer to *Section 33.3: RTC functional description*)
- PA0/RTC_TAMP2 and PE6/RTC_TAMP3 when they are configured by the RTC as tamper pins

Backup domain access

After a system reset, the backup domain (RTC registers and backup registers) is protected against possible unwanted write accesses. To enable access to the backup domain, proceed as follows:

1. Enable the power interface clock by setting the PWREN bits in the *Section 6.4.18: APB1 peripheral clock enable register 1 (RCC_APB1ENR1)*
2. Set the DBP bit in the *Power control register 1 (PWR_CR1)* to enable access to the backup domain
3. Select the RTC clock source in the *Backup domain control register (RCC_BDCR)*.
4. Enable the RTC clock by setting the RTCEN [15] bit in the *Backup domain control register (RCC_BDCR)*.

VBAT battery charging

When VDD is present, It is possible to charge the external battery on VBAT through an internal resistance.

The VBAT charging is done either through a 5 kOhm resistor or through a 1.5 kOhm resistor depending on the VBRS bit value in the PWR_CR4 register.

The battery charging is enabled by setting VBE bit in the PWR_CR4 register. It is automatically disabled in VBAT mode.

5.1.5 Voltage regulator

Two embedded linear voltage regulators supply all the digital circuitries, except for the Standby circuitry and the backup domain. The main regulator output voltage (V_{CORE}) can be programmed by software to two different power ranges (Range 1 and Range 2) in order to optimize the consumption depending on the system's maximum operating frequency (refer to *Section 6.2.9: Clock source frequency versus voltage scaling* and to *Section 3.3.3: Read access latency*.

The voltage regulators are always enabled after a reset. Depending on the application modes, the V_{CORE} supply is provided either by the main regulator (MR) or by the low-power regulator (LPR).

- In Run, Sleep and Stop 0 modes, both regulators are enabled and the main regulator (MR) supplies full power to the V_{CORE} domain (core, memories and digital peripherals).
- In low-power run and low-power sleep modes, the main regulator is off and the low-power regulator (LPR) supplies low power to the V_{CORE} domain, preserving the contents of the registers and internal SRAM1 and SRAM2.
- In Stop 1 and Stop 2 modes, the main regulator is off and the low-power regulator (LPR) supplies low power to the V_{CORE} domain, preserving the contents of the registers and of internal SRAM1 and SRAM2.
- In Standby mode with SRAM2 content preserved (RRS bit is set in the PWR_CR3 register), the main regulator (MR) is off and the low-power regulator (LPR) provides the supply to SRAM2 only. The core and digital peripherals (except Standby circuitry and backup domain) and SRAM1 are powered off.
- In Standby mode, both regulators are powered off. The contents of the registers and of SRAM1 and SRAM2 is lost except for the Standby circuitry and the backup domain.
- In Shutdown mode, both regulators are powered off. When exiting from Shutdown mode, a power-on reset is generated. Consequently, the contents of the registers and SRAM1 and SRAM2 is lost, except for the backup domain.

5.1.6 Dynamic voltage scaling management

The dynamic voltage scaling is a power management technique which consists in increasing or decreasing the voltage used for the digital peripherals (V_{CORE}), according to the application performance and power consumption needs.

Dynamic voltage scaling to increase V_{CORE} is known as overvolting. It allows to improve the device performance.

Dynamic voltage scaling to decrease V_{CORE} is known as undervolting. It is performed to save power, particularly in laptop and other mobile devices where the energy comes from a battery and is thus limited.

- Range 1: High-performance range.

The main regulator provides a typical output voltage at 1.2 V. The system clock frequency can be up to 80 MHz. The Flash access time for read access is minimum, write and erase operations are possible.

- Range 2: Low-power range.

The main regulator provides a typical output voltage at 1.0 V. The system clock frequency can be up to 26 MHz.The Flash access time for a read access is increased as compared to Range 1; write and erase operations are possible.

Voltage scaling is selected through the VOS bit in the PWR_CR1 register.

The sequence to go from Range 1 to Range 2 is:

1. Reduce the system frequency to a value lower than 26 MHz.
2. Adjust number of wait states according new frequency target in Range2 (LATENCY bits in the FLASH_ACR).
3. Program the VOS bits to “10” in the PWR_CR1 register.

The sequence to go from Range 2 to Range 1 is:

1. Program the VOS bits to “01” in the PWR_CR1 register.
2. Wait until the VOSF flag is cleared in the PWR_SR2 register.
3. Adjust number of wait states according new frequency target in Range1 (LATENCY bits in the FLASH_ACR).
4. Increase the system frequency.

5.2 Power supply supervisor

5.2.1 Power-on reset (POR) / power-down reset (PDR) / brown-out reset (BOR)

The device has an integrated power-on reset (POR) / power-down reset (PDR), coupled with a brown-out reset (BOR) circuitry. The BOR is active in all power modes except Shutdown mode, and cannot be disabled.

Five BOR thresholds can be selected through option bytes.

During power-on, the BOR keeps the device under reset until the supply voltage V_{DD} reaches the specified V_{BORx} threshold. When V_{DD} drops below the selected threshold, a device reset is generated. When V_{DD} is above the V_{BORx} upper limit, the device reset is released and the system can start.

For more details on the brown-out reset thresholds, refer to the electrical characteristics section in the datasheet.

Figure 8. Brown-out reset waveform

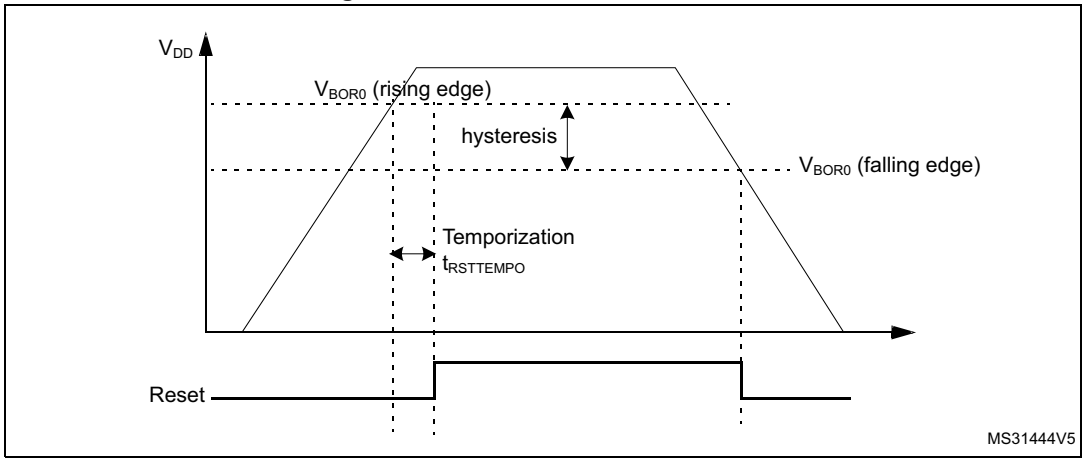

1. The reset temporization $t_{RSTTEMPO}$ is present only for the BOR lowest threshold (V_{BOR0}).

5.2.2 Programmable voltage detector (PVD)

You can use the PVD to monitor the V_{DD} power supply by comparing it to a threshold selected by the PLS[2:0] bits in the *Power control register 2 (PWR_CR2)*.

The PVD is enabled by setting the PVDE bit.

A PVDO flag is available, in the *Power status register 2 (PWR_SR2)*, to indicate if V_{DD} is higher or lower than the PVD threshold. This event is internally connected to the EXTI line16 and can generate an interrupt if enabled through the EXTI registers. The PVD output interrupt can be generated when V_{DD} drops below the PVD threshold and/or when V_{DD} rises above the PVD threshold depending on EXTI line16 rising/falling edge configuration. As an example, the service routine could perform emergency shutdown tasks.

Figure 9. PVD thresholds

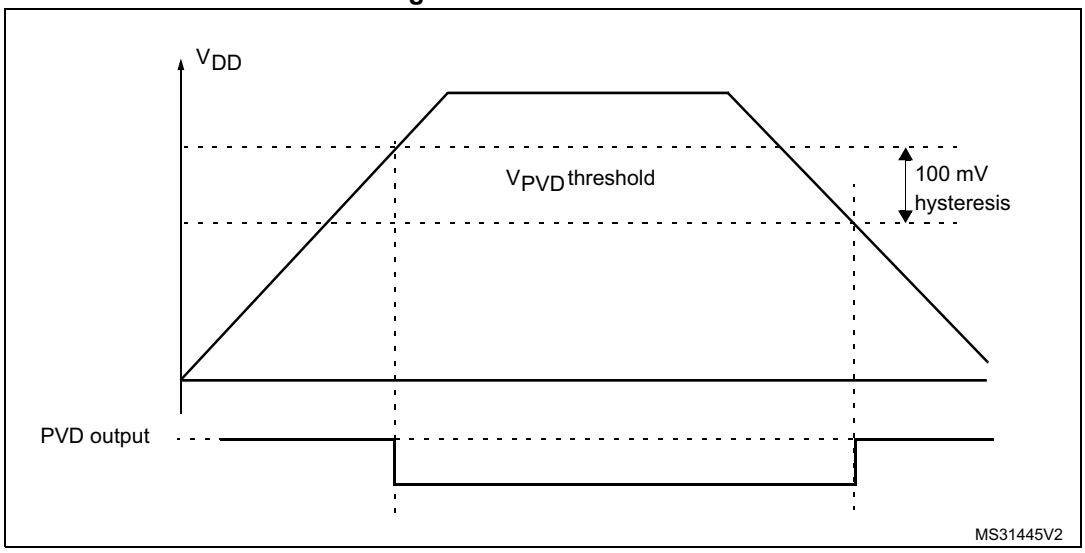

5.2.3 Peripheral Voltage Monitoring (PVM)

Only V_{DD} is monitored by default, as it is the only supply required for all system-related functions. The other supplies (V_{DDA} and V_{DDUSB}[a]) can be independent from V_{DD} and can be monitored with four Peripheral Voltage Monitoring (PVM).

Each of the three PVMx (x=1, 3, 4) is a comparator between a fixed threshold V_{PVMx} and the selected power supply. PVMOx flags indicate if the independent power supply is higher or lower than the PVMx threshold: PVMOx flag is cleared when the supply voltage is above the PVMx threshold, and is set when the supply voltage is below the PVMx threshold.

Each PVM output is connected to an EXTI line and can generate an interrupt if enabled through the EXTI registers. The PVMx output interrupt is generated when the independent power supply drops below the PVMx threshold and/or when it rises above the PVMx threshold, depending on EXTI line rising/falling edge configuration.

Each PVM can remain active in Stop 0, Stop 1 and Stop 2 modes, and the PVM interrupt can wake up from the Stop mode.

Table 18. PVM features

PVM	Power supply	PVM threshold	EXTI line
PVM1[1]	V_{DDUSB}	V_{PVM1} (around 1.2 V)	35
PVM3	V_{DDA}	V_{PVM3} (around 1.65 V)	37
PVM4	V_{DDA}	V_{PVM4} (around 2.2 V)	38

1. Not available for STM32L431xx devices.

The independent supplies (V_{DDA} and V_{DDUSB}[a]) are not considered as present by default, and a logical and electrical isolation is applied to ignore any information coming from the peripherals supplied by these dedicated supplies.

- If these supplies are shorted externally to V_{DD}, the application should assume they are available without enabling any Peripheral Voltage Monitoring.
- If these supplies are independent from V_{DD}, the Peripheral Voltage Monitoring (PVM) can be enabled to confirm whether the supply is present or not.

The following sequence must be done before using the USB_FS[a] peripheral:

1. If V_{DDUSB} is independent from V_{DD}:
   a) Enable the PVM1 by setting PVME1 bit in the *Power control register 2 (PWR_CR2)*.
   b) Wait for the PVM1 wakeup time
   c) Wait until PVMO1 bit is cleared in the *Power status register 2 (PWR_SR2)*.
   d) Optional: Disable the PVM1 for consumption saving.
2. Set the USV bit in the *Power control register 2 (PWR_CR2)* to remove the V_{DDUSB} power isolation.

The following sequence must be done before using any of these analog peripherals: analog to digital converters, digital to analog converters, comparators, operational amplifiers, voltage reference buffer:

a. Not available for STM32L431xx devices.

1. If V_{DDA} is independent from V_{DD}:
   a) Enable the PVM3 (or PVM4) by setting PVME3 (or PVME4) bit in the *Power control register 2 (PWR_CR2)*.
   b) Wait for the PVM3 (or PVM4) wakeup time
   c) Wait until PVMO3 (or PVMO4) bit is cleared in the *Power status register 2 (PWR_SR2)*.
   d) Optional: Disable the PVM3 (or PVM4) for consumption saving.
2. Enable the analog peripheral, which automatically removes the V_{DDA} isolation.

5.3 Low-power modes

By default, the microcontroller is in Run mode after a system or a power Reset. Several low-power modes are available to save power when the CPU does not need to be kept running, for example when waiting for an external event. It is up to the user to select the mode that gives the best compromise between low-power consumption, short startup time and available wakeup sources.

The device features seven low-power modes:

- Sleep mode: CPU clock off, all peripherals including Cortex®-M4 core peripherals such as NVIC, SysTick, etc. can run and wake up the CPU when an interrupt or an event occurs. Refer to *Section 5.3.4: Sleep mode*.
- Low-power run mode: This mode is achieved when the system clock frequency is reduced below 2 MHz. The code is executed from the SRAM or the Flash memory. The regulator is in low-power mode to minimize the regulator's operating current. Refer to *Section 5.3.2: Low-power run mode (LP run)*.
- Low-power sleep mode: This mode is entered from the Low-power run mode: Cortex®-M4 is off. Refer to *Section 5.3.5: Low-power sleep mode (LP sleep)*.
- Stop 0, Stop 1 and Stop 2 modes: SRAM1, SRAM2 and all registers content are retained. All clocks in the V_{CORE} domain are stopped, the PLL, the MSI, the HSI16 and the HSE are disabled. The LSI and the LSE can be kept running.

  The RTC can remain active (Stop mode with RTC, Stop mode without RTC).

  Some peripherals with the wakeup capability can enable the HSI16 RC during the Stop mode to detect their wakeup condition.

  In Stop 2 mode, most of the V_{CORE} domain is put in a lower leakage mode.

  Stop 1 offers the largest number of active peripherals and wakeup sources, a smaller wakeup time but a higher consumption than Stop 2. In Stop 0 mode, the main regulator remains ON, which allows the fastest wakeup time but with much higher consumption. The active peripherals and wakeup sources are the same as in Stop 1 mode.

  The system clock, when exiting from Stop 0, Stop 1 or Stop 2 mode, can be either MSI up to 48 MHz or HSI16, depending on the software configuration.

  Refer to *Section 5.3.6: Stop 0 mode* and *Section 5.3.8: Stop 2 mode*.
- Standby mode: V_{CORE} domain is powered off. However, it is possible to preserve the SRAM2 contents:
  – Standby mode with SRAM2 retention when the bit RRS is set in PWR_CR3 register. In this case, SRAM2 is supplied by the low-power regulator.
  – Standby mode when the bit RRS is cleared in PWR_CR3 register. In this case the

main regulator and the low-power regulator are powered off.

All clocks in the V_{CORE} domain are stopped, the PLL, the MSI, the HSI16 and the HSE are disabled. The LSI and the LSE can be kept running.

The RTC can remain active (Standby mode with RTC, Standby mode without RTC).

The system clock, when exiting Standby modes, is MSI from 1 MHz up to 8 MHz.

Refer to *Section 5.3.9: Standby mode*.

- Shutdown mode: V_{CORE} domain is powered off. All clocks in the V_{CORE} domain are stopped, the PLL, the MSI, the HSI16, the LSI and the HSE are disabled. The LSE can be kept running. The system clock, when exiting the Shutdown mode, is MSI at 4 MHz. In this mode, the supply voltage monitoring is disabled and the product behavior is not guaranteed in case of a power voltage drop. Refer to *Section 5.3.10: Shutdown mode*.

In addition, the power consumption in Run mode can be reduced by one of the following means:

- Slowing down the system clocks
- Gating the clocks to the APB and AHB peripherals when they are unused.

Figure 10. Low-power modes possible transitions

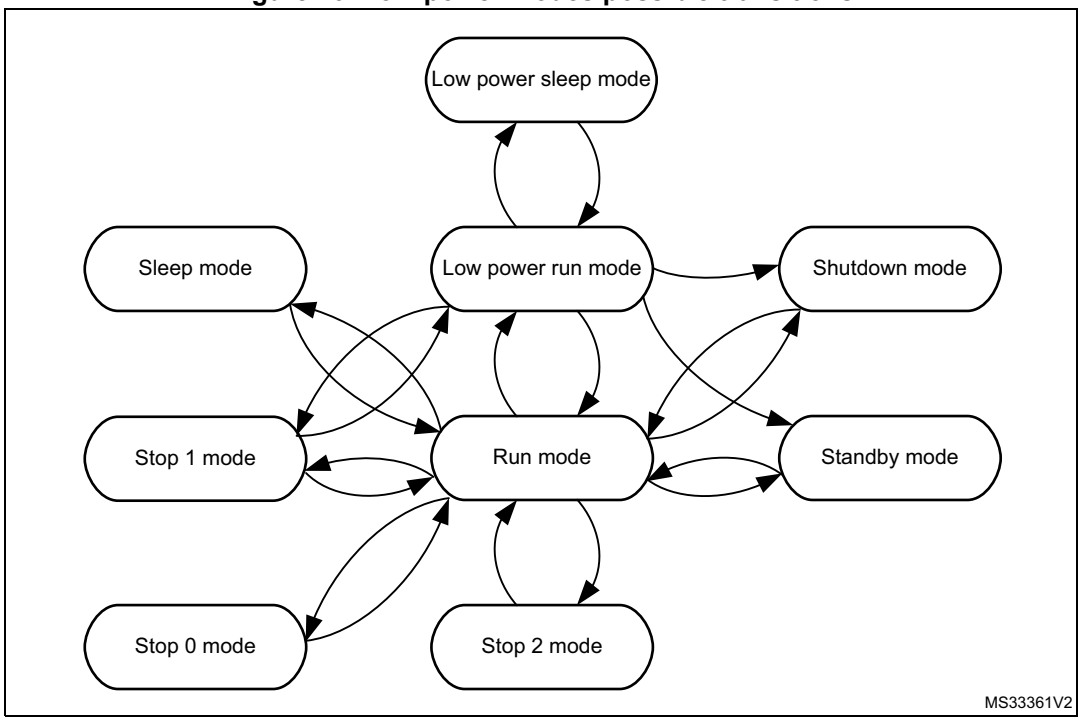

Table 19. Low-power mode summary

Mode name	Entry	Wakeup source(1)	Wakeup system clock	Effect on clocks	Voltage regulators	
					MR	LPR
Sleep (Sleep-now or Sleep-on-exit)	WFI or Return from ISR	Any interrupt	Same as before entering Sleep mode	CPU clock OFF no effect on other clocks or analog clock sources	ON	ON
	WFE	Wakeup event				
Low-power run	Set LPR bit	Clear LPR bit	Same as Low-power run clock	None	OFF	ON
Low-power sleep	Set LPR bit + WFI or Return from ISR	Any interrupt	Same as before entering Low-power sleep mode	CPU clock OFF no effect on other clocks or analog clock sources	OFF	ON
	Set LPR bit + WFE	Wakeup event			OFF	ON
Stop 0	LPMS=”000” + SLEEPDEEP bit + WFI or Return from ISR or WFE	Any EXTI line (configured in the EXTI registers) Specific peripherals events	HSI16 when STOPWUCK=1 in RCC_CFGR MSI with the frequency before entering the Stop mode when STOPWUCK=0.	All clocks OFF except LSI and LSE	ON	ON
Stop 1	LPMS=”001” + SLEEPDEEP bit + WFI or Return from ISR or WFE				OFF	
Stop 2	LPMS=”010” + SLEEPDEEP bit + WFI or Return from ISR or WFE					
Standby with SRAM2	LPMS=”011”+ Set RRS bit + SLEEPDEEP bit + WFI or Return from ISR or WFE	WKUP pin edge, RTC event, external reset in NRST pin, IWDG reset	MSI from 1 MHz up to 8 MHz			
Standby	LPMS=”011” + Clear RRS bit + SLEEPDEEP bit + WFI or Return from ISR or WFE	WKUP pin edge, RTC event, external reset in NRST pin, IWDG reset			OFF	OFF
Shutdown	LPMS=”1--” + SLEEPDEEP bit + WFI or Return from ISR or WFE	WKUP pin edge, RTC event, external reset in NRST pin	MSI 4 MHz	All clocks OFF except LSE	OFF	OFF

1. Refer to *Table 20: Functionalities depending on the working mode*.

Table 20. Functionalities depending on the working mode[1]

Peripheral	Run	Sleep	Low-power run	Low-power sleep	Stop 0/1		Stop 2		Standby		Shutdown		VBAT
					-	Wakeup capability	-	Wakeup capability	-	Wakeup capability	-	Wakeup capability	
CPU	Y	-	Y	-	-	-	-	-	-	-	-	-	-
Flash memory (up to 256 KB)	O[2]	O[2]	O[2]	O[2]	-	-	-	-	-	-	-	-	-
SRAM1 (48 KB)	Y	Y[3]	Y	Y[3]	Y	-	Y	-	-	-	-	-	-
SRAM2 (16 KB)	Y	Y[3]	Y	Y[3]	Y	-	Y	-	O[4]	-	-	-	-
QUADSPI	O	O	O	O	-	-	-	-	-	-	-	-	-
Backup Registers	Y	Y	Y	Y	Y	-	Y	-	Y	-	Y	-	Y
Brown-out reset (BOR)	Y	Y	Y	Y	Y	Y	Y	Y	Y	Y	-	-	-
Programmable Voltage Detector (PVD)	O	O	O	O	O	O	O	O	-	-	-	-	-
Peripheral Voltage Monitor (PVMx; x=1,3,4)	O	O	O	O	O	O	O	O	-	-	-	-	-
DMA	O	O	O	O	-	-	-	-	-	-	-	-	-
High Speed Internal (HSI16)	O	O	O	O	[5]	-	[5]	-	-	-	-	-	-
Oscillator HSI48	O	O	-	-	-	-	-	-	-	-	-	-	-
High Speed External (HSE)	O	O	O	O	-	-	-	-	-	-	-	-	-
Low Speed Internal (LSI)	O	O	O	O	O	-	O	-	O	-	-	-	-
Low Speed External (LSE)	O	O	O	O	O	-	O	-	O	-	O	-	O
Multi-Speed Internal (MSI)	O	O	O	O	-	-	-	-	-	-	-	-	-
Clock Security System (CSS)	O	O	O	O	-	-	-	-	-	-	-	-	-
Clock Security System on LSE	O	O	O	O	O	O	O	O	O	O	-	-	-
RTC / Auto wakeup	O	O	O	O	O	O	O	O	O	O	O	O	O
Number of RTC Tamper pins	3	3	3	3	3	O	3	O	3	O	3	O	3
LCD[6]	O	O	O	O	O	O	O	O	-	-	-	-	-
USB FS[6]	O[9]	O[9]	-	-	-	O	-	-	-	-	-	-	-
USARTx (x=1,2,3)	O	O	O	O	O[7]	O[7]	-	-	-	-	-	-	-

Table 20. Functionalities depending on the working mode[1] (continued)

Peripheral	Run	Sleep	Low-power run	Low-power sleep	Stop 0/1		Stop 2		Standby		Shutdown		VBAT
					-	Wakeup capability	-	Wakeup capability	-	Wakeup capability	-	Wakeup capability	
Low-power UART (LPUART)	O	O	O	O	O[7]	O[7]	O[7]	O[7]	-	-	-	-	-
I2Cx (x=1,2)	O	O	O	O	O[8]	O[8]	-	-	-	-	-	-	-
I2C3	O	O	O	O	O[8]	O[8]	O[8]	O[8]	-	-	-	-	-
SPIx (x=1,2,3)	O	O	O	O	-	-	-	-	-	-	-	-	-
CAN	O	O	O	O	-	-	-	-	-	-	-	-	-
SDMMC1	O	O	O	O	-	-	-	-	-	-	-	-	-
SWPMI	O	O	O	O	-	O	-	-	-	-	-	-	-
SAIx (x=1)	O	O	O	O	-	-	-	-	-	-	-	-	-
ADCx (x=1)	O	O	O	O	-	-	-	-	-	-	-	-	-
DACx (x=1,2)	O	O	O	O	O	-	-	-	-	-	-	-	-
VREFBUF	O	O	O	O	O	-	-	-	-	-	-	-	-
OPAMPx (x=1)	O	O	O	O	O	-	-	-	-	-	-	-	-
COMPx (x=1,2)	O	O	O	O	O	O	O	O	-	-	-	-	-
Temperature sensor	O	O	O	O	-	-	-	-	-	-	-	-	-
Timers (TIMx)	O	O	O	O	-	-	-	-	-	-	-	-	-
Low-power timer 1 (LPTIM1)	O	O	O	O	O	O	O	O	-	-	-	-	-
Low-power timer 2 (LPTIM2)	O	O	O	O	O	O	-	-	-	-	-	-	-
Independent watchdog (IWDG)	O	O	O	O	O	O	O	O	O	O	-	-	-
Window watchdog (WWDG)	O	O	O	O	-	-	-	-	-	-	-	-	-
SysTick timer	O	O	O	O	-	-	-	-	-	-	-	-	-
Touch sensing controller (TSC)	O	O	O	O	-	-	-	-	-	-	-	-	-
Random number generator (RNG)	O[9]	O[9]	-	-	-	-	-	-	-	-	-	-	-
AES hardware accelerator[10]	O	O	O	O	-	-	-	-	-	-	-	-	-

Table 20. Functionalities depending on the working mode(1) (continued)

Peripheral	Run	Sleep	Low-power run	Low-power sleep	Stop 0/1		Stop 2		Standby		Shutdown		VBAT
					-	Wakeup capability	-	Wakeup capability	-	Wakeup capability	-	Wakeup capability	
CRC calculation unit	O	O	O	O	-	-	-	-	-	-	-	-	-
GPIOs	O	O	O	O	O	O	O	O	(11)	5 pins (12)	(13)	5 pins (12)	-

1. Legend: Y = Yes (Enable). O = Optional (Disable by default. Can be enabled by software). - = Not available.
2. The Flash can be configured in power-down mode. By default, it is not in power-down mode.
3. The SRAM clock can be gated on or off.
4. SRAM2 content is preserved when the bit RRS is set in PWR_CR3 register.
5. Some peripherals with wakeup from Stop capability can request HSI16 to be enabled. In this case, HSI16 is woken up by the peripheral, and only feeds the peripheral which requested it. HSI16 is automatically put off when the peripheral does not need it anymore.
6. Not available for STM32L431xx devices.
7. UART and LPUART reception is functional in Stop mode, and generates a wakeup interrupt on Start, address match or received frame event.
8. I2C address detection is functional in Stop mode, and generates a wakeup interrupt in case of address match.
9. Voltage scaling Range 1 only.
10. Not available on STM32L431xx and STM32L433xx devices.
11. I/Os can be configured with internal pull-up, pull-down or floating in Standby mode.
12. The I/Os with wakeup from Standby/Shutdown capability are: PA0, PC13, PE6, PA2, PC5.
13. I/Os can be configured with internal pull-up, pull-down or floating in Shutdown mode but the configuration is lost when exiting the Shutdown mode.

Debug mode

By default, the debug connection is lost if the application puts the MCU in Stop 0, Stop1, Stop 2, Standby or Shutdown mode while the debug features are used. This is due to the fact that the Cortex®-M4 core is no longer clocked.

However, by setting some configuration bits in the DBGMCU_CR register, the software can be debugged even when using the low-power modes extensively. For more details, refer to *Section 43.16.1: Debug support for low-power modes.*

5.3.1 Run mode

Slowing down system clocks

In Run mode, the speed of the system clocks (SYSCLK, HCLK, PCLK) can be reduced by programming the prescaler registers. These prescalers can also be used to slow down the peripherals before entering the Sleep mode.

For more details, refer to *Section 6.4.3: Clock configuration register (RCC_CFGR)*.

Peripheral clock gating

In Run mode, the HCLK and PCLK for individual peripherals and memories can be stopped at any time to reduce the power consumption.

To further reduce the power consumption in Sleep mode, the peripheral clocks can be disabled prior to executing the WFI or WFE instructions.

The peripheral clock gating is controlled by the RCC_AHBxENR and RCC_APBxENR registers.

Disabling the peripherals clocks in Sleep mode can be performed automatically by resetting the corresponding bit in the RCC_AHBxSMENR and RCC_APBxSMENR registers.

5.3.2 Low-power run mode (LP run)

To further reduce the consumption when the system is in Run mode, the regulator can be configured in low-power mode. In this mode, the system frequency should not exceed 2 MHz.

Please refer to the product datasheet for more details on voltage regulator and peripherals operating conditions.

I/O states in Low-power run mode

In Low-power run mode, all I/O pins keep the same state as in Run mode.

Entering the Low-power run mode

To enter the Low-power run mode, proceed as follows:

1. Optional: Jump into the SRAM and power-down the Flash by setting the RUN_PD bit in the *Flash access control register (FLASH_ACR)*.
2. Decrease the system clock frequency below 2 MHz.
3. Force the regulator in low-power mode by setting the LPR bit in the PWR_CR1 register.

Refer to *Table 21: Low-power run* on how to enter the Low-power run mode.

Exiting the Low-power run mode

To exit the Low-power run mode, proceed as follows:

1. Force the regulator in main mode by clearing the LPR bit in the PWR_CR1 register.
2. Wait until REGLPF bit is cleared in the PWR_SR2 register.
3. Increase the system clock frequency.

Refer to *Table 21: Low-power run* on how to exit the Low-power run mode.

Table 21. Low-power run

Low-power run mode	Description
Mode entry	Decrease the system clock frequency below 2 MHz LPR = 1

Table 21. Low-power run

Low-power run mode	Description
Mode exit	LPR = 0 Wait until REGLPF = 0 Increase the system clock frequency
Wakeup latency	Regulator wakeup time from low-power mode

5.3.3 Low power modes

Entering low power mode

Low power modes are entered by the MCU by executing the WFI (Wait For Interrupt), or WFE (Wait for Event) instructions, or when the SLEEPONEXIT bit in the Cortex®-M4 System Control register is set on Return from ISR.
Entering Low-power mode through WFI or WFE will be executed only if no interrupt is pending or no event is pending.

Exiting low power mode

From Sleep modes, and Stop modes the MCU exit low power mode depending on the way the low power mode was entered:

- If the WFI instruction or Return from ISR was used to enter the low power mode, any peripheral interrupt acknowledged by the NVIC can wake up the device.
- If the WFE instruction is used to enter the low power mode, the MCU exits the low power mode as soon as an event occurs. The wakeup event can be generated either by:
  - NVIC IRQ interrupt.

    - When SEVONPEND = 0 in the Cortex®-M4 System Control register. By enabling an interrupt in the peripheral control register and in the NVIC. When the MCU resumes from WFE, the peripheral interrupt pending bit and the NVIC peripheral IRQ channel pending bit (in the NVIC interrupt clear pending register) have to be cleared.

    Only NVIC interrupts with sufficient priority will wakeup and interrupt the MCU.

    - When SEVONPEND = 1 in the Cortex®-M4 System Control register.

    By enabling an interrupt in the peripheral control register and optionally in the NVIC. When the MCU resumes from WFE, the peripheral interrupt pending bit and when enabled the NVIC peripheral IRQ channel pending bit (in the NVIC interrupt clear pending register) have to be cleared.

    All NVIC interrupts will wakeup the MCU, even the disabled ones. Only enabled NVIC interrupts with sufficient priority will wakeup and interrupt the MCU.
  - Event

    Configuring a EXTI line in event mode. When the CPU resumes from WFE, it is not necessary to clear the EXTI peripheral interrupt pending bit or the NVIC IRQ channel pending bit as the pending bits corresponding to the event line is not set.

    It may be necessary to clear the interrupt flag in the peripheral.

From Standby modes, and Shutdown modes the MCU exit low power mode through an external reset (NRST pin), an IWDG reset, a rising edge on one of the enabled WKUPx pins

or a RTC event occurs (see *Figure 325: RTC block diagrams*).
After waking up from Standby or Shutdown mode, program execution restarts in the same way as after a Reset (boot pin sampling, option bytes loading, reset vector is fetched, etc.).

5.3.4 Sleep mode

I/O states in Sleep mode

In Sleep mode, all I/O pins keep the same state as in Run mode.

Entering the Sleep mode

The Sleep mode is entered according *Section : Entering low power mode*, when the SLEEPDEEP bit in the Cortex®-M4 System Control register is clear.

Refer to *Table 22: Sleep* for details on how to enter the Sleep mode.

Exiting the Sleep mode

The Sleep mode is exit according Section : Exiting low power mode.

Refer to *Table 22: Sleep* for more details on how to exit the Sleep mode.

Table 22. Sleep

Sleep-now mode	Description
Mode entry	WFI (Wait for Interrupt) or WFE (Wait for Event) while: – SLEEPDEEP = 0 – No interrupt (for WFI) or event (for WFE) is pending Refer to the Cortex®-M4 System Control register.
	On return from ISR while: – SLEEPDEEP = 0 and – SLEEPONEXIT = 1 – No interrupt is pending Refer to the Cortex®-M4 System Control register.
Mode exit	If WFI or return from ISR was used for entry Interrupt: refer to *Table 45: STM32L431/433/443 vector table* If WFE was used for entry and SEVONPEND = 0: Wakeup event: refer to *Section 13.3.2: Wakeup event management* If WFE was used for entry and SEVONPEND = 1: Interrupt even when disabled in NVIC: refer to *Table 45: STM32L431/433/443 vector table* or Wakeup event: refer to *Section 13.3.2: Wakeup event management*
Wakeup latency	None

5.3.5 Low-power sleep mode (LP sleep)

Please refer to the product datasheet for more details on voltage regulator and peripherals operating conditions.

I/O states in Low-power sleep mode

In Low-power sleep mode, all I/O pins keep the same state as in Run mode.

Entering the Low-power sleep mode

The Low-power sleep mode is entered from low-power run mode according *Section : Entering low power mode*, when the SLEEPDEEP bit in the Cortex®-M4 System Control register is clear.

Refer to *Table 23: Low-power sleep* for details on how to enter the Low-power sleep mode.

Exiting the Low-power sleep mode

The low-power Sleep mode is exit according *Section : Exiting low power mode*. When exiting the Low-power sleep mode by issuing an interrupt or an event, the MCU is in Low-power run mode.

Refer to *Table 23: Low-power sleep* for details on how to exit the Low-power sleep mode.

Table 23. Low-power sleep

Low-power sleep-now mode	Description
Mode entry	Low-power sleep mode is entered from the Low-power run mode. WFI (Wait for Interrupt) or WFE (Wait for Event) while: – SLEEPDEEP = 0 – No interrupt (for WFI) or event (for WFE) is pending Refer to the Cortex®-M4 System Control register.
	Low-power sleep mode is entered from the Low-power run mode. On return from ISR while: – SLEEPDEEP = 0 and – SLEEPONEXIT = 1 – No interrupt is pending Refer to the Cortex®-M4 System Control register.
Mode exit	If WFI or Return from ISR was used for entry Interrupt: refer to *Table 45: STM32L431/433/443 vector table* If WFE was used for entry and SEVONPEND = 0: Wakeup event: refer to *Section 13.3.2: Wakeup event management* If WFE was used for entry and SEVONPEND = 1: Interrupt even when disabled in NVIC: refer to *Table 45: STM32L431/433/443 vector table* Wakeup event: refer to *Section 13.3.2: Wakeup event management* After exiting the Low-power sleep mode, the MCU is in Low-power run mode.
Wakeup latency	None

5.3.6 Stop 0 mode

The Stop 0 mode is based on the Cortex®-M4 deepsleep mode combined with the peripheral clock gating. The voltage regulator is configured in main regulator mode. In Stop 0 mode, all clocks in the V_{CORE} domain are stopped; the PLL, the MSI, the HSI16 and the

HSE oscillators are disabled. Some peripherals with the wakeup capability (I2Cx (x=1,2,3), U(S)ARTx(x=1,2,3) and LPUART) can switch on the HSI16 to receive a frame, and switch off the HSI16 after receiving the frame if it is not a wakeup frame. In this case, the HSI16 clock is propagated only to the peripheral requesting it.

SRAM1, SRAM2 and register contents are preserved.

The BOR is always available in Stop 0 mode. The consumption is increased when thresholds higher than V_{BOR0} are used.

I/O states in Stop 0 mode

In the Stop 0 mode, all I/O pins keep the same state as in the Run mode.

Entering the Stop 0 mode

The Stop 0 mode is entered according *Section : Entering low power mode*, when the SLEEPDEEP bit in the Cortex®-M4 System Control register is set.

Refer to *Table 24: Stop 0 mode* for details on how to enter the Stop 0 mode.

If Flash memory programming is ongoing, the Stop 0 mode entry is delayed until the memory access is finished.

If an access to the APB domain is ongoing, The Stop 0 mode entry is delayed until the APB access is finished.

In Stop 0 mode, the following features can be selected by programming individual control bits:

- Independent watchdog (IWDG): the IWDG is started by writing to its Key register or by hardware option. Once started, it cannot be stopped except by a Reset. See *Section 31.3: IWDG functional description*.
- real-time clock (RTC): this is configured by the RTCEN bit in the *Backup domain control register (RCC_BDCR)*
- Internal RC oscillator (LSI): this is configured by the LSION bit in the *Control/status register (RCC_CSR)*.
- External 32.768 kHz oscillator (LSE): this is configured by the LSEON bit in the *Backup domain control register (RCC_BDCR)*.

Several peripherals can be used in Stop 0 mode and can add consumption if they are enabled and clocked by LSI or LSE, or when they request the HSI16 clock: LCD[a], LPTIM1, LPTIM2, I2Cx (x=1,2,3) U(S)ARTx(x=1,2,3), LPUART.

The DACx (x=1,2), the OPAMP and the comparators can be used in Stop 0 mode, the PVMx (x=1,3,4) and the PVD as well. If they are not needed, they must be disabled by software to save their power consumptions.

The ADCx (x=1), temperature sensor and VREFBUF buffer can consume power during the Stop 0 mode, unless they are disabled before entering this mode.

Exiting the Stop 0 mode

The Stop 0 mode is exit according *Section : Entering low power mode*.

a. Not available for STM32L431xx devices.

Refer to *Table 24: Stop 0 mode* for details on how to exit Stop 0 mode.

When exiting Stop 0 mode by issuing an interrupt or a wakeup event, the HSI16 oscillator is selected as system clock if the bit STOPWUCK is set in *Clock configuration register (RCC_CFGR)*. The MSI oscillator is selected as system clock if the bit STOPWUCK is cleared. The wakeup time is shorter when HSI16 is selected as wakeup system clock. The MSI selection allows wakeup at higher frequency, up to 48 MHz.

When the voltage regulator operates in low-power mode, an additional startup delay is incurred when waking up from Stop 0 mode with HSI16. By keeping the internal regulator ON during Stop 0 mode, the consumption is higher although the startup time is reduced.

When exiting the Stop 0 mode, the MCU is either in Run mode (Range 1 or Range 2 depending on VOS bit in PWR_CR1) or in Low-power run mode if the bit LPR is set in the PWR_CR1 register.

Table 24. Stop 0 mode

Stop 0 mode	Description
Mode entry	WFI (Wait for Interrupt) or WFE (Wait for Event) while: – SLEEPDEEP bit is set in Cortex®-M4 System Control register – No interrupt (for WFI) or event (for WFE) is pending – LPMS = “000” in PWR_CR1
	On Return from ISR while: – SLEEPDEEP bit is set in Cortex®-M4 System Control register – SLEEPONEXIT = 1 – No interrupt is pending – LPMS = “000” in PWR_CR1
	Note: To enter Stop 0 mode, all EXTI Line pending bits (in Pending register 1 (EXTI_PR1)), and the peripheral flags generating wakeup interrupts must be cleared. Otherwise, the Stop 0 mode entry procedure is ignored and program execution continues.
Mode exit	If WFI or Return from ISR was used for entry Any EXTI Line configured in Interrupt mode (the corresponding EXTI Interrupt vector must be enabled in the NVIC). The interrupt source can be external interrupts or peripherals with wakeup capability. Refer to *Table 45: STM32L431/433/443 vector table*. If WFE was used for entry and SEVONPEND = 0: Any EXTI Line configured in event mode. Refer to *Section 13.3.2: Wakeup event management*. If WFE was used for entry and SEVONPEND = 1: Any EXTI Line configured in Interrupt mode (even if the corresponding EXTI Interrupt vector is disabled in the NVIC). The interrupt source can be external interrupts or peripherals with wakeup capability. Refer to*Table 45: STM32L431/433/443 vector table*. Wakeup event: refer to *Section 13.3.2: Wakeup event management*
Wakeup latency	Longest wakeup time between: MSI or HSI16 wakeup time and Flash wakeup time from Stop 0 mode.

5.3.7 Stop 1 mode

The Stop 1 mode is the same as Stop 0 mode except that the main regulator is OFF, and only the low-power regulator is ON. Stop 1 mode can be entered from Run mode and from Low-power run mode.

Refer to *Table 25: Stop 1 mode* for details on how to enter and exit Stop 1 mode.

Table 25. Stop 1 mode

Stop 1 mode	Description
Mode entry	WFI (Wait for Interrupt) or WFE (Wait for Event) while: – SLEEPDEEP bit is set in Cortex®-M4 System Control register – No interrupt (for WFI) or event (for WFE) is pending – LPMS = “001” in PWR_CR1
	On Return from ISR while: – SLEEPDEEP bit is set in Cortex®-M4 System Control register – SLEEPONEXIT = 1 – No interrupt is pending – LPMS = “001” in PWR_CR1
	Note: To enter Stop 1 mode, all EXTI Line pending bits (in Pending register 1 (EXTI_PR1)), and the peripheral flags generating wakeup interrupts must be cleared. Otherwise, the Stop 1 mode entry procedure is ignored and program execution continues.
Mode exit	If WFI or Return from ISR was used for entry Any EXTI Line configured in Interrupt mode (the corresponding EXTI Interrupt vector must be enabled in the NVIC). The interrupt source can be external interrupts or peripherals with wakeup capability. Refer to *Table 45: STM32L431/433/443 vector table*. If WFE was used for entry and SEVONPEND = 0: Any EXTI Line configured in event mode. Refer to *Section 13.3.2: Wakeup event management*. If WFE was used for entry and SEVONPEND = 1: Any EXTI Line configured in Interrupt mode (even if the corresponding EXTI Interrupt vector is disabled in the NVIC). The interrupt source can be external interrupts or peripherals with wakeup capability. Refer to*Table 45: STM32L431/433/443 vector table*. Wakeup event: refer to *Section 13.3.2: Wakeup event management*
Wakeup latency	Longest wakeup time between: MSI or HSI16 wakeup time and regulator wakeup time from Low-power mode + Flash wakeup time from Stop 1 mode.

5.3.8 Stop 2 mode

The Stop 2 mode is based on the Cortex®-M4 deepsleep mode combined with peripheral clock gating. In Stop 2 mode, all clocks in the V_{CORE} domain are stopped, the PLL, the MSI, the HSI16 and the HSE oscillators are disabled. Some peripherals with wakeup capability (I2C3 and LPUART) can switch on the HSI16 to receive a frame, and switch off the HSI16 after receiving the frame if it is not a wakeup frame. In this case the HSI16 clock is propagated only to the peripheral requesting it.

SRAM1, SRAM2 and register contents are preserved.

The BOR is always available in Stop 2 mode. The consumption is increased when thresholds higher than V_{BOR0} are used.

Note: The comparators outputs, the LPUART outputs and the LPTIM1 outputs are forced to low speed (OSPEEDy=00) during the Stop 2 mode.

I/O states in Stop 2 mode

In the Stop 2 mode, all I/O pins keep the same state as in the Run mode.

Entering Stop 2 mode

The Stop 2 mode is entered according *Section : Entering low power mode*, when the SLEEPDEEP bit in the Cortex®-M4 System Control register is set.

Refer to *Table 26: Stop 2 mode* for details on how to enter the Stop 2 mode.

Stop 2 mode can only be entered from Run mode. It is not possible to enter Stop 2 mode from the Low-power run mode.

If Flash memory programming is ongoing, the Stop 2 mode entry is delayed until the memory access is finished.

If an access to the APB domain is ongoing, The Stop 2 mode entry is delayed until the APB access is finished.

In Stop 2 mode, the following features can be selected by programming individual control bits:

- Independent watchdog (IWDG): the IWDG is started by writing to its Key register or by hardware option. Once started it cannot be stopped except by a Reset. See *Section 31.3: IWDG functional description* in *Section 31: Independent watchdog (IWDG)*.
- real-time clock (RTC): this is configured by the RTCEN bit in the *Backup domain control register (RCC_BDCR)*
- Internal RC oscillator (LSI): this is configured by the LSION bit in the *Control/status register (RCC_CSR)*.
- External 32.768 kHz oscillator (LSE): this is configured by the LSEON bit in the *Backup domain control register (RCC_BDCR)*.

Several peripherals can be used in Stop 2 mode and can add consumption if they are enabled and clocked by LSI or LSE, or when they request the HSI16 clock: LCD[a], LPTIM1, I2C3, LPUART.

The comparators can be used in Stop 2 mode, the PVMx (x=1,3,4) and the PVD as well. If they are not needed, they must be disabled by software to save their power consumptions.

The ADCx, OPAMPx, DACx, temperature sensor and VREFBUF buffer can consume power during Stop 2 mode, unless they are disabled before entering this mode.

All the peripherals which cannot be enabled in Stop 2 mode must be either disabled by clearing the Enable bit in the peripheral itself, or put under reset state by setting the corresponding bit in the *AHB1 peripheral reset register (RCC_AHB1RSTR)*, *AHB2*

a. Not available for STM32L431xx devices.

peripheral reset register (RCC_AHB2RSTR), *AHB3 peripheral reset register (RCC_AHB3RSTR)*, *APB1 peripheral reset register 1 (RCC_APB1RSTR1)*, *APB1 peripheral reset register 2 (RCC_APB1RSTR2)*, *APB2 peripheral reset register (RCC_APB2RSTR)*.

Exiting Stop 2 mode

The Stop 2 mode is exit according *Section : Exiting low power mode*.

Refer to *Table 26: Stop 2 mode* for details on how to exit Stop 2 mode.

When exiting Stop 2 mode by issuing an interrupt or a wakeup event, the HSI16 oscillator is selected as system clock if the bit STOPWUCK is set in *Clock configuration register (RCC_CFGR)*. The MSI oscillator is selected as system clock if the bit STOPWUCK is cleared. The wakeup time is shorter when HSI16 is selected as wakeup system clock. The MSI selection allows wakeup at higher frequency, up to 48 MHz.

When exiting the Stop 2 mode, the MCU is in Run mode (Range 1 or Range 2 depending on VOS bit in PWR_CR1).

Table 26. Stop 2 mode

Stop 2 mode	Description
Mode entry	WFI (Wait for Interrupt) or WFE (Wait for Event) while: – SLEEPDEEP bit is set in Cortex®-M4 System Control register – No interrupt (for WFI) or event (for WFE) is pending – LPMS = “010” in PWR_CR1
	On return from ISR while: – SLEEPDEEP bit is set in Cortex®-M4 System Control register – SLEEPONEXIT = 1 – No interrupt is pending – LPMS = “010” in PWR_CR1
	Note: To enter Stop 2 mode, all EXTI Line pending bits (in Pending register 1 (EXTI_PR1)), and the peripheral flags generating wakeup interrupts must be cleared. Otherwise, the Stop mode entry procedure is ignored and program execution continues.

Table 26. Stop 2 mode (continued)

Stop 2 mode	Description
Mode exit	If WFI or Return from ISR was used for entry: Any EXTI Line configured in Interrupt mode (the corresponding EXTI Interrupt vector must be enabled in the NVIC). The interrupt source can be external interrupts or peripherals with wakeup capability. Refer to *Table 45: STM32L431/433/443 vector table*. If WFE was used for entry and SEVONPEND = 0: Any EXTI Line configured in event mode. Refer to *Section 13.3.2: Wakeup event management*. If WFE was used for entry and SEVONPEND = 1: Any EXTI Line configured in Interrupt mode (even if the corresponding EXTI Interrupt vector is disabled in the NVIC). The interrupt source can be external interrupts or peripherals with wakeup capability. Refer to *Table 45: STM32L431/433/443 vector table*. Any EXTI Line configured in event mode. Refer to *Section 13.3.2: Wakeup event management*.
Wakeup latency	Longest wakeup time between: MSI or HSI16 wakeup time and regulator wakeup time from Low-power mode + Flash wakeup time from Stop 2 mode.

5.3.9 Standby mode

The Standby mode allows to achieve the lowest power consumption with BOR. It is based on the Cortex®-M4 deepsleep mode, with the voltage regulators disabled (except when SRAM2 content is preserved). The PLL, the HSI16, the MSI and the HSE oscillators are also switched off.

SRAM1 and register contents are lost except for registers in the Backup domain and Standby circuitry (see *Figure 7*). SRAM2 content can be preserved if the bit RRS is set in the PWR_CR3 register. In this case the Low-power regulator is ON and provides the supply to SRAM2 only.

The BOR is always available in Standby mode. The consumption is increased when thresholds higher than V_{BOR0} are used.

I/O states in Standby mode

In the Standby mode, the I/Os can be configured either with a pull-up (refer to PWR_PUCRx registers (x=A,B,C,D,E,H)), or with a pull-down (refer to PWR_PDCRx registers (x=A,B,C,D,E,H)), or can be kept in analog state.

The RTC outputs on PC13 are functional in Standby mode. PC14 and PC15 used for LSE are also functional. 5 wakeup pins (WKUPx, x=1,2...5) and the 3 RTC tampers are available.

Entering Standby mode

The Standby mode is entered according *Section : Entering low power mode*, when the SLEEPDEEP bit in the Cortex®-M4 System Control register is set.

Refer to *Table 27: Standby mode* for details on how to enter Standby mode.

In Standby mode, the following features can be selected by programming individual control bits:

- Independent watchdog (IWDG): the IWDG is started by writing to its Key register or by hardware option. Once started it cannot be stopped except by a reset. See *Section 31.3: IWDG functional description* in *Section 31: Independent watchdog (IWDG)*.
- real-time clock (RTC): this is configured by the RTCEN bit in the Backup domain control register (RCC_BDCR)
- Internal RC oscillator (LSI): this is configured by the LSION bit in the Control/status register (RCC_CSR).
- External 32.768 kHz oscillator (LSE): this is configured by the LSEON bit in the Backup domain control register (RCC_BDCR)

Exiting Standby mode

The Standby mode is exit according *Section : Entering low power mode*. The SBF status flag in the *Power control register 3 (PWR_CR3)* indicates that the MCU was in Standby mode. All registers are reset after wakeup from Standby except for *Power control register 3 (PWR_CR3)*.

Refer to *Table 27: Standby mode* for more details on how to exit Standby mode.

Table 27. Standby mode

Standby mode	Description
Mode entry	WFI (Wait for Interrupt) or WFE (Wait for Event) while: – SLEEPDEEP bit is set in Cortex®-M4 System Control register – No interrupt (for WFI) or event (for WFE) is pending – LPMS = “011” in PWR_CR1 – WUFx bits are cleared in power status register 1 (PWR_SR1)
	On return from ISR while: – SLEEPDEEP bit is set in Cortex®-M4 System Control register – SLEEPONEXIT = 1 – No interrupt is pending – LPMS = “011” in PWR_CR1 and – WUFx bits are cleared in power status register 1 (PWR_SR1) – The RTC flag corresponding to the chosen wakeup source (RTC Alarm A, RTC Alarm B, RTC wakeup, tamper or timestamp flags) is cleared
Mode exit	WKUPx pin edge, RTC event, external Reset in NRST pin, IWDG Reset, BOR reset
Wakeup latency	Reset phase

5.3.10 Shutdown mode

The Shutdown mode allows to achieve the lowest power consumption. It is based on the deepsleep mode, with the voltage regulator disabled. The V_{CORE} domain is consequently powered off. The PLL, the HSI16, the MSI, the LSI and the HSE oscillators are also switched off.

SRAM1, SRAM2 and register contents are lost except for registers in the Backup domain. The BOR is not available in Shutdown mode. No power voltage monitoring is possible in this mode, therefore the switch to Backup domain is not supported.

I/O states in Shutdown mode

In the Shutdown mode, the I/Os can be configured either with a pull-up (refer to PWR_PUCRx registers (x=A,B,C,D,E,H), or with a pull-down (refer to PWR_PDCRx registers (x=A,B,C,D,E,H)), or can be kept in analog state. However this configuration is lost when exiting the Shutdown mode due to the power-on reset.

The RTC outputs on PC13 are functional in Shutdown mode. PC14 and PC15 used for LSE are also functional. 5 wakeup pins (WKUPx, x=1,2...5) and the 3 RTC tampers are available.

Entering Shutdown mode

The Shutdown mode is entered according *Entering low power mode*, when the SLEEPDEEP bit in the Cortex®-M4 System Control register is set.

Refer to *Table 28: Shutdown mode* for details on how to enter Shutdown mode.

In Shutdown mode, the following features can be selected by programming individual control bits:

- real-time clock (RTC): this is configured by the RTCEN bit in the Backup domain control register (RCC_BDCR). Caution: in case of VDD power-down the RTC content will be lost.
- external 32.768 kHz oscillator (LSE): this is configured by the LSEON bit in the Backup domain control register (RCC_BDCR)

Exiting Shutdown mode

The Shutdown mode is exit according *Section : Exiting low power mode*. A power-on reset occurs when exiting from Shutdown mode. All registers (except for the ones in the Backup domain) are reset after wakeup from Shutdown.

Refer to *Table 28: Shutdown mode* for more details on how to exit Shutdown mode.

Table 28. Shutdown mode

Shutdown mode	Description
Mode entry	WFI (Wait for Interrupt) or WFE (Wait for Event) while: – SLEEPDEEP bit is set in Cortex®-M4 System Control register – No interrupt (for WFI) or event (for WFE) is pending – LPMS = “1XX” in PWR_CR1 – WUFx bits are cleared in power status register 1 (PWR_SR1)
	On return from ISR while: – SLEEPDEEP bit is set in Cortex®-M4 System Control register – SLEEPONEXT = 1 – No interrupt is pending – LPMS = “1XX” in PWR_CR1 and – WUFx bits are cleared in power status register 1 (PWR_SR1) – The RTC flag corresponding to the chosen wakeup source (RTC Alarm A, RTC Alarm B, RTC wakeup, tamper or timestamp flags) is cleared
Mode exit	WKUPx pin edge, RTC event, external Reset in NRST pin
Wakeup latency	Reset phase

5.3.11 Auto-wakeup from low-power mode

The RTC can be used to wakeup the MCU from low-power mode without depending on an external interrupt (Auto-wakeup mode). The RTC provides a programmable time base for waking up from Stop (0, 1 or 2) or Standby mode at regular intervals. For this purpose, two of the three alternative RTC clock sources can be selected by programming the RTCSEL[1:0] bits in the *Backup domain control register (RCC_BDCR)*:

- Low-power 32.768 kHz external crystal oscillator (LSE OSC)
  This clock source provides a precise time base with very low-power consumption.
- Low-power internal RC Oscillator (LSI)
  This clock source has the advantage of saving the cost of the 32.768 kHz crystal. This internal RC Oscillator is designed to add minimum power consumption.

To wakeup from Stop mode with an RTC alarm event, it is necessary to:

- Configure the EXTI Line 18 to be sensitive to rising edge
- Configure the RTC to generate the RTC alarm

To wakeup from Standby mode, there is no need to configure the EXTI Line 18.

To wakeup from Stop mode with an RTC wakeup event, it is necessary to:

- Configure the EXTI Line 20 to be sensitive to rising edge
- Configure the RTC to generate the RTC alarm

To wakeup from Standby mode, there is no need to configure the EXTI Line 20.

The LCD[(a)] Start of frame interrupt can also be used as a periodic wakeup from Stop (0, 1 or 2) mode. The LCD[(a)] is not available in Standby mode.

a. Not available for STM32L431xx devices.

The LCD[a] clock is derived from the RTC clock selected by RTCSEL[1:0].

5.4 PWR registers

The peripheral registers can be accessed by half-words (16-bit) or words (32-bit).

5.4.1 Power control register 1 (PWR_CR1)

Address offset: 0x00

Reset value: 0x0000 0200. This register is reset after wakeup from Standby mode.

31	30	29	28	27	26	25	24	23	22	21	20	19	18	17	16
Res.	Res.	Res.	Res.	Res.	Res.	Res.	Res.	Res.	Res.	Res.	Res.	Res.	Res.	Res.	Res.

15	14	13	12	11	10	9	8	7	6	5	4	3	2	1	0
Res.	LPR	Res.	Res.	Res.	VOS[1:0]		DBP	Res.	Res.	Res.	Res.	Res.	LPMS[2:0]		
	rw				rw	rw	rw						rw	rw	rw

Bits 31:15 Reserved, must be kept at reset value.

Bit 14 **LPR**: Low-power run

When this bit is set, the regulator is switched from main mode (MR) to low-power mode (LPR).

Note: Stop 2 mode cannot be entered when LPR bit is set. Stop 1 is entered instead.

Bits 13:11 Reserved, must be kept at reset value.

Bits 10:9 **VOS**: Voltage scaling range selection

00: Cannot be written (forbidden by hardware)
01: Range 1
10: Range 2
11: Cannot be written (forbidden by hardware)

a. Not available for STM32L431xx devices.

Bit 8 **DBP**: Disable backup domain write protection

In reset state, the RTC and backup registers are protected against parasitic write access. This bit must be set to enable write access to these registers.

0: Access to RTC and Backup registers disabled

1: Access to RTC and Backup registers enabled

Bits 7:3 Reserved, must be kept at reset value.

Bits 2:0 **LPMS[2:0]**: Low-power mode selection

These bits select the low-power mode entered when CPU enters the deepsleep mode.

000: Stop 0 mode

001: Stop 1 mode

010: Stop 2 mode

011: Standby mode

1xx: Shutdown mode

Note: If LPR bit is set, Stop 2 mode cannot be selected and Stop 1 mode shall be entered instead of Stop 2.

In Standby mode, SRAM2 can be preserved or not, depending on RRS bit configuration in PWR_CR3.

5.4.2 Power control register 2 (PWR_CR2)

Address offset: 0x04

Reset value: 0x0000 0000. This register is reset when exiting the Standby mode.

31	30	29	28	27	26	25	24	23	22	21	20	19	18	17	16
Res.	Res.	Res.	Res.	Res.	Res.	Res.	Res.	Res.	Res.	Res.	Res.	Res.	Res.	Res.	Res.

15	14	13	12	11	10	9	8	7	6	5	4	3	2	1	0
Res.	Res.	Res.	Res.	Res.	USV(1)	Res.	Res.	PVME4	PVME3	Res.	PVME1 (1)	PLS[2:0]			PVDE
					rw			rw	rw		rw	rw	rw	rw	rw

1. Not available for STM32L431xx devices.

Bits 31:11 Reserved, must be kept at reset value.

Bit 10 **USV**(1): V_{DDUSB} USB supply valid

This bit is used to validate the V_{DDUSB} supply for electrical and logical isolation purpose. Setting this bit is mandatory to use the USB FS peripheral. If V_{DDUSB} is not always present in the application, the PVM can be used to determine whether this supply is ready or not.

0: V_{DDUSB} is not present. Logical and electrical isolation is applied to ignore this supply.

1: V_{DDUSB} is valid.

Bits 9:8 Reserved, must be kept at reset value.

Bit 7 **PVME4**: Peripheral voltage monitoring 4 enable: V_{DDA} vs. 2.2V

0: PVM4 (V_{DDA} monitoring vs. 2.2V threshold) disable.

1: PVM4 (V_{DDA} monitoring vs. 2.2V threshold) enable.

Bit 6 **PVME3**: Peripheral voltage monitoring 3 enable: V_{DDA} vs. 1.62V

0: PVM3 (V_{DDA} monitoring vs. 1.62V threshold) disable.

1: PVM3 (V_{DDA} monitoring vs. 1.62V threshold) enable.

Bit 5 Reserved, must be kept at reset value.

Bit 4 **PVME1**[(1)]: Peripheral voltage monitoring 1 enable: V_{DDUSB} vs. 1.2V
0: PVM1 (V_{DDUSB} monitoring vs. 1.2V threshold) disable.
1: PVM1 (V_{DDUSB} monitoring vs. 1.2V threshold) enable.

Bits 3:1 **PLS[2:0]**: Power voltage detector level selection.
These bits select the voltage threshold detected by the power voltage detector:
000: V_{PVD0} around 2.0 V
001: V_{PVD1} around 2.2 V
010: V_{PVD2} around 2.4 V
011: V_{PVD3} around 2.5 V
100: V_{PVD4} around 2.6 V
101: V_{PVD5} around 2.8 V
110: V_{PVD6} around 2.9 V
111: External input analog voltage PVD_IN (compared internally to VREFINT)

Note: These bits are write-protected when the bit PVDL (PVD Lock) is set in the SYSCFG_CBR register.
These bits are reset only by a system reset.

Bit 0 **PVDE**: Power voltage detector enable
0: Power voltage detector disable.
1: Power voltage detector enable.

Note: This bit is write-protected when the bit PVDL (PVD Lock) is set in the SYSCFG_CBR register.
This bit is reset only by a system reset.

1. Not available for STM32L431xx devices.

5.4.3 Power control register 3 (PWR_CR3)

Address offset: 0x08

Reset value: 0x0000 8000. This register is not reset when exiting Standby modes and with the PWRRST bit in the RCC_APB1RSTR1 register.

Access: Additional APB cycles are needed to access this register vs. a standard APB access (3 for a write and 2 for a read).

31	30	29	28	27	26	25	24	23	22	21	20	19	18	17	16
Res.	Res.	Res.	Res.	Res.	Res.	Res.	Res.	Res.	Res.	Res.	Res.	Res.	Res.	Res.	Res.

15	14	13	12	11	10	9	8	7	6	5	4	3	2	1	0
EIWUL	Res.	Res.	Res.	Res.	APC	Res.	RRS	Res.	Res.	Res.	EWUP5	EWUP4	EWUP3	EWUP2	EWUP1
rw					rw		rw				rw	rw	rw	rw	rw

Bits 31:16 Reserved, must be kept at reset value.

Bit 15 **EIWUL**: Enable internal wakeup line
0: Internal wakeup line disable.
1: Internal wakeup line enable.

Bits 14:11 Reserved, must be kept at reset value.

Bit 10 **APC**: Apply pull-up and pull-down configuration

When this bit is set, the I/O pull-up and pull-down configurations defined in the PWR_PUCRx and PWR_PDCRx registers are applied. When this bit is cleared, the PWR_PUCRx and PWR_PDCRx registers are not applied to the I/Os.

Bit 9 Reserved, must be kept at reset value.

Bit 8 **RRS**: SRAM2 retention in Standby mode

0: SRAM2 is powered off in Standby mode (SRAM2 content is lost).

1: SRAM2 is powered by the low-power regulator in Standby mode (SRAM2 content is kept).

Bits 7:5 Reserved, must be kept at reset value.

Bit 4 **EWUP5**: Enable Wakeup pin WKUP5

When this bit is set, the external wakeup pin WKUP5 is enabled and triggers a wakeup from Standby or Shutdown event when a rising or a falling edge occurs.The active edge is configured via the WP5 bit in the PWR_CR4 register.

Bit 3 **EWUP4**: Enable Wakeup pin WKUP4

When this bit is set, the external wakeup pin WKUP4 is enabled and triggers a wakeup from Standby or Shutdown event when a rising or a falling edge occurs. The active edge is configured via the WP4 bit in the PWR_CR4 register.

Bit 2 **EWUP3**: Enable Wakeup pin WKUP3

When this bit is set, the external wakeup pin WKUP3 is enabled and triggers a wakeup from Standby or Shutdown event when a rising or a falling edge occurs. The active edge is configured via the WP3 bit in the PWR_CR4 register.

Bit 1 **EWUP2**: Enable Wakeup pin WKUP2

When this bit is set, the external wakeup pin WKUP2 is enabled and triggers a wakeup from Standby or Shutdown event when a rising or a falling edge occurs. The active edge is configured via the WP2 bit in the PWR_CR4 register.

Bit 0 **EWUP1**: Enable Wakeup pin WKUP1

When this bit is set, the external wakeup pin WKUP1 is enabled and triggers a wakeup from Standby or Shutdown event when a rising or a falling edge occurs. The active edge is configured via the WP1 bit in the PWR_CR4 register.

5.4.4 Power control register 4 (PWR_CR4)

Address offset: 0x0C

Reset value: 0x0000 0000. This register is not reset when exiting Standby modes and with the PWRRST bit in the RCC_APB1RSTR1 register.

Access: Additional APB cycles are needed to access this register vs. a standard APB access (3 for a write and 2 for a read).

31	30	29	28	27	26	25	24	23	22	21	20	19	18	17	16
Res.	Res.	Res.	Res.	Res.	Res.	Res.	Res.	Res.	Res.	Res.	Res.	Res.	Res.	Res.	Res.

15	14	13	12	11	10	9	8	7	6	5	4	3	2	1	0
Res.	Res.	Res.	Res.	Res.	Res.	VBRS	VBE	Res.	Res.	Res.	WP5	WP4	WP3	WP2	WP1
						rw	rw				rw	rw	rw	rw	rw

Bits 31:10 Reserved, must be kept at reset value.

Bit 9 **VBRS**: V_{BAT} battery charging resistor selection
0: Charge V_{BAT} through a 5 kOhms resistor
1: Charge V_{BAT} through a 1.5 kOhms resistor

Bit 8 **VBE**: V_{BAT} battery charging enable
0: V_{BAT} battery charging disable
1: V_{BAT} battery charging enable

Bits 7:5 Reserved, must be kept at reset value.

Bit 4 **WP5**: Wakeup pin WKUP5 polarity
This bit defines the polarity used for an event detection on external wake-up pin, WKUP5
0: Detection on high level (rising edge)
1: Detection on low level (falling edge)

Bit 3 **WP4**: Wakeup pin WKUP4 polarity
This bit defines the polarity used for an event detection on external wake-up pin, WKUP4
0: Detection on high level (rising edge)
1: Detection on low level (falling edge)

Bit 2 **WP3**: Wakeup pin WKUP3 polarity
This bit defines the polarity used for an event detection on external wake-up pin, WKUP3
0: Detection on high level (rising edge)
1: Detection on low level (falling edge)

Bit 1 **WP2**: Wakeup pin WKUP2 polarity
This bit defines the polarity used for an event detection on external wake-up pin, WKUP2
0: Detection on high level (rising edge)
1: Detection on low level (falling edge)

Bit 0 **WP1**: Wakeup pin WKUP1 polarity
This bit defines the polarity used for an event detection on external wake-up pin, WKUP1
0: Detection on high level (rising edge)
1: Detection on low level (falling edge)

5.4.5 Power status register 1 (PWR_SR1)

Address offset: 0x10

Reset value: 0x0000 0000. This register is not reset when exiting Standby modes and with the PWRRST bit in the RCC_APB1RSTR1 register.

Access: 2 additional APB cycles are needed to read this register vs. a standard APB read.

31	30	29	28	27	26	25	24	23	22	21	20	19	18	17	16
Res.	Res.	Res.	Res.	Res.	Res.	Res.	Res.	Res.	Res.	Res.	Res.	Res.	Res.	Res.	Res.

15	14	13	12	11	10	9	8	7	6	5	4	3	2	1	0
WUFI	Res.	Res.	Res.	Res.	Res.	Res.	SBF	Res.	Res.	Res.	WUF5	WUF4	WUF3	WUF2	WUF1
r							r				r	r	r	r	r

Bits 31:16 Reserved, must be kept at reset value.

Bit 15 **WUFI**: Wakeup flag internal

This bit is set when a wakeup is detected on the internal wakeup line. It is cleared when all internal wakeup sources are cleared.

Bits 14:9 Reserved, must be kept at reset value.

Bit 8 **SBF**: Standby flag

This bit is set by hardware when the device enters the Standby mode and is cleared by setting the CSBF bit in the PWR_SCR register, or by a power-on reset. It is not cleared by the system reset.

0: The device did not enter the Standby mode

1: The device entered the Standby mode

Bits 7:5 Reserved, must be kept at reset value.

Bit 4 **WUF5**: Wakeup flag 5

This bit is set when a wakeup event is detected on wakeup pin, WKUP5. It is cleared by writing ‘1’ in the CWUF5 bit of the PWR_SCR register.

Bit 3 **WUF4**: Wakeup flag 4

This bit is set when a wakeup event is detected on wakeup pin,WKUP4. It is cleared by writing ‘1’ in the CWUF4 bit of the PWR_SCR register.

Bit 2 **WUF3**: Wakeup flag 3

This bit is set when a wakeup event is detected on wakeup pin, WKUP3. It is cleared by writing ‘1’ in the CWUF3 bit of the PWR_SCR register.

Bit 1 **WUF2**: Wakeup flag 2

This bit is set when a wakeup event is detected on wakeup pin, WKUP2. It is cleared by writing ‘1’ in the CWUF2 bit of the PWR_SCR register.

Bit 0 **WUF1**: Wakeup flag 1

This bit is set when a wakeup event is detected on wakeup pin, WKUP1. It is cleared by writing ‘1’ in the CWUF1 bit of the PWR_SCR register.

5.4.6 Power status register 2 (PWR_SR2)

Address offset: 0x14

Reset value: 0x0000 0000. This register is partially reset when exiting Standby/Shutdown modes.

31	30	29	28	27	26	25	24	23	22	21	20	19	18	17	16
Res.	Res.	Res.	Res.	Res.	Res.	Res.	Res.	Res.	Res.	Res.	Res.	Res.	Res.	Res.	Res.

15	14	13	12	11	10	9	8	7	6	5	4	3	2	1	0
PVMO 4	PVMO 3	Res.	PVMO 1(1)	PVDO	VOSF	REGLP F	REGLP S	Res.	Res.	Res.	Res.	Res.	Res.	Res.	Res.
r	r		r	r	r	r	r								

1. Not available for STM32L431xx devices.

Bits 31:16 Reserved, must be kept at reset value.

Bit 15 **PVMO4**: Peripheral voltage monitoring output: V_{DDA} vs. 2.2 V
0: V_{DDA} voltage is above PVM4 threshold (around 2.2 V).
1: V_{DDA} voltage is below PVM4 threshold (around 2.2 V).
Note: PVMO4 is cleared when PVM4 is disabled (PVME4 = 0). After enabling PVM4, the PVM4 output is valid after the PVM4 wakeup time.

Bit 14 **PVMO3**: Peripheral voltage monitoring output: V_{DDA} vs. 1.62 V
0: V_{DDA} voltage is above PVM3 threshold (around 1.62 V).
1: V_{DDA} voltage is below PVM3 threshold (around 1.62 V).
Note: PVMO3 is cleared when PVM3 is disabled (PVME3 = 0). After enabling PVM3, the PVM3 output is valid after the PVM3 wakeup time.

Bit 13 Reserved, must be kept at reset value.

Bit 12 **PVMO1**[(1)]: Peripheral voltage monitoring output: V_{DDUSB} vs. 1.2 V
0: V_{DDUSB} voltage is above PVM1 threshold (around 1.2 V).
1: V_{DDUSB} voltage is below PVM1 threshold (around 1.2 V).
Note: PVMO1 is cleared when PVM1 is disabled (PVME1 = 0). After enabling PVM1, the PVM1 output is valid after the PVM1 wakeup time.

Bit 11 **PVDO**: Power voltage detector output
0: V_{DD} is above the selected PVD threshold
1: V_{DD} is below the selected PVD threshold

Bit 10 **VOSF**: Voltage scaling flag
A delay is required for the internal regulator to be ready after the voltage scaling has been changed. VOSF indicates that the regulator reached the voltage level defined with VOS bits of the PWR_CR1 register.
0: The regulator is ready in the selected voltage range
1: The regulator output voltage is changing to the required voltage level

Bit 9 **REGLPF**: Low-power regulator flag
This bit is set by hardware when the MCU is in Low-power run mode. When the MCU exits from the Low-power run mode, this bit remains at 1 until the regulator is ready in main mode. A polling on this bit must be done before increasing the product frequency.
This bit is cleared by hardware when the regulator is ready.
0: The regulator is ready in main mode (MR)
1: The regulator is in low-power mode (LPR)

Bit 8 **REGLPS**: Low-power regulator started
This bit provides the information whether the low-power regulator is ready after a power-on reset or a Standby/Shutdown. If the Standby mode is entered while REGLPS bit is still cleared, the wakeup from Standby mode time may be increased.
0: The low-power regulator is not ready
1: The low-power regulator is ready

Bits 7:0 Reserved, must be kept at reset value.

1. Not available for STM32L431xx devices.

5.4.7 Power status clear register (PWR_SCR)

Address offset: 0x18

Reset value: 0x0000 0000.

Access: 3 additional APB cycles are needed to write this register vs. a standard APB write.

31	30	29	28	27	26	25	24	23	22	21	20	19	18	17	16
Res.	Res.	Res.	Res.	Res.	Res.	Res.	Res.	Res.	Res.	Res.	Res.	Res.	Res.	Res.	Res.
15	14	13	12	11	10	9	8	7	6	5	4	3	2	1	0
Res.	Res.	Res.	Res.	Res.	Res.	Res.	CSBF	Res.	Res.	Res.	CWUF5	CWUF4	CWUF3	CWUF2	CWUF1
							w				w	w	w	w	w

Bits 31:9 Reserved, must be kept at reset value.

Bit 8 **CSBF**: Clear standby flag
Setting this bit clears the SBF flag in the PWR_SR1 register.

Bits 7:5 Reserved, must be kept at reset value.

Bit 4 **CWUF5**: Clear wakeup flag 5
Setting this bit clears the WUF5 flag in the PWR_SR1 register.

Bit 3 **CWUF4**: Clear wakeup flag 4
Setting this bit clears the WUF4 flag in the PWR_SR1 register.

Bit 2 **CWUF3**: Clear wakeup flag 3
Setting this bit clears the WUF3 flag in the PWR_SR1 register.

Bit 1 **CWUF2**: Clear wakeup flag 2
Setting this bit clears the WUF2 flag in the PWR_SR1 register.

Bit 0 **CWUF1**: Clear wakeup flag 1
Setting this bit clears the WUF1 flag in the PWR_SR1 register.

5.4.8 Power Port A pull-up control register (PWR_PUCRA)

Address offset: 0x20.

Reset value: 0x0000 0000. This register is not reset when exiting Standby modes and with PWRRST bit in the RCC_APB1RSTR1 register.

Access: Additional APB cycles are needed to access this register vs. a standard APB access (3 for a write and 2 for a read).

31	30	29	28	27	26	25	24	23	22	21	20	19	18	17	16
Res.	Res.	Res.	Res.	Res.	Res.	Res.	Res.	Res.	Res.	Res.	Res.	Res.	Res.	Res.	Res.
15	14	13	12	11	10	9	8	7	6	5	4	3	2	1	0
PU15	Res.	PU13	PU12	PU11	PU10	PU9	PU8	PU7	PU6	PU5	PU4	PU3	PU2	PU1	PU0
rw		rw	rw	rw	rw	rw	rw	rw	rw	rw	rw	rw	rw	rw	rw

Bits 31:16 Reserved, must be kept at reset value.

Bit 15 **PU15**: Port A pull-up bit 15

When set, this bit activates the pull-up on PA[15] when APC bit is set in PWR_CR3 register. The pull-up is not activated if the corresponding PD15 bit is also set.

Bit 14 Reserved, must be kept at reset value.

Bits 13:0 **PUy**: Port A pull-up bit y (y=0..13)

When set, this bit activates the pull-up on PA[y] when APC bit is set in PWR_CR3 register. The pull-up is not activated if the corresponding PDy bit is also set.

5.4.9 Power Port A pull-down control register (PWR_PDCRA)

Address offset: 0x24.

Reset value: 0x0000 0000. This register is not reset when exiting Standby modes and with PWRRST bit in the RCC_APB1RSTR1 register.

Access: Additional APB cycles are needed to access this register vs. a standard APB access (3 for a write and 2 for a read).

31	30	29	28	27	26	25	24	23	22	21	20	19	18	17	16
Res.	Res.	Res.	Res.	Res.	Res.	Res.	Res.	Res.	Res.	Res.	Res.	Res.	Res.	Res.	Res.
15	**14**	**13**	**12**	**11**	**10**	**9**	**8**	**7**	**6**	**5**	**4**	**3**	**2**	**1**	**0**
Res.	PD14	Res.	PD12	PD11	PD10	PD9	PD8	PD7	PD6	PD5	PD4	PD3	PD2	PD1	PD0
	rw		rw	rw	rw	rw	rw	rw	rw	rw	rw	rw	rw	rw	rw

Bits 31:15 Reserved, must be kept at reset value.

Bit 14 **PD14**: Port A pull-down bit 14

When set, this bit activates the pull-down on PA[14] when APC bit is set in PWR_CR3 register.

Bit 13 Reserved, must be kept at reset value.

Bits 12:0 **PDy**: Port A pull-down bit y (y=0..12)

When set, this bit activates the pull-down on PA[y] when APC bit is set in PWR_CR3 register.

5.4.10 Power Port B pull-up control register (PWR_PUCRB)

Address offset: 0x28.

Reset value: 0x0000 0000. This register is not reset when exiting Standby modes and with PWRRST bit in the RCC_APB1RSTR1 register.

Access: Additional APB cycles are needed to access this register vs. a standard APB access (3 for a write and 2 for a read).

31	30	29	28	27	26	25	24	23	22	21	20	19	18	17	16
Res.	Res.	Res.	Res.	Res.	Res.	Res.	Res.	Res.	Res.	Res.	Res.	Res.	Res.	Res.	Res.
15	14	13	12	11	10	9	8	7	6	5	4	3	2	1	0
PU15	PU14	PU13	PU12	PU11	PU10	PU9	PU8	PU7	PU6	PU5	PU4	PU3	PU2	PU1	PU0
rw	rw	rw	rw	rw	rw	rw	rw	rw	rw	rw	rw	rw	rw	rw	rw

Bits 31:16 Reserved, must be kept at reset value.

Bits 15:0 **PUy**: Port B pull-up bit y (y=0..15)
When set, this bit activates the pull-up on PB[y] when APC bit is set in PWR_CR3 register. The pull-up is not activated if the corresponding PDy bit is also set.

5.4.11 Power Port B pull-down control register (PWR_PDCRB)

Address offset: 0x2C.

Reset value: 0x0000 0000. This register is not reset when exiting Standby modes and with PWRRST bit in the RCC_APB1RSTR1 register.

Access: Additional APB cycles are needed to access this register vs. a standard APB access (3 for a write and 2 for a read).

31	30	29	28	27	26	25	24	23	22	21	20	19	18	17	16
Res.	Res.	Res.	Res.	Res.	Res.	Res.	Res.	Res.	Res.	Res.	Res.	Res.	Res.	Res.	Res.
15	14	13	12	11	10	9	8	7	6	5	4	3	2	1	0
PD15	PD14	PD13	PD12	PD11	PD10	PD9	PD8	PD7	PD6	PD5	Res.	PD3	PD2	PD1	PD0
rw	rw	rw	rw	rw	rw	rw	rw	rw	rw	rw		rw	rw	rw	rw

Bits 31:16 Reserved, must be kept at reset value.

Bits 15:5 **PDy**: Port B pull-down bit y (y=5..15)
When set, this bit activates the pull-down on PB[y] when APC bit is set in PWR_CR3 register.

Bit 4 Reserved, must be kept at reset value.

Bits 3:0 **PDy**: Port B pull-down bit y (y=0..3)
When set, this bit activates the pull-down on PB[y] when APC bit is set in PWR_CR3 register.

5.4.12 Power Port C pull-up control register (PWR_PUCRC)

Address offset: 0x30.

Reset value: 0x0000 0000. This register is not reset when exiting Standby modes and with PWRRST bit in the RCC_APB1RSTR1 register.

Access: Additional APB cycles are needed to access this register vs. a standard APB access (3 for a write and 2 for a read).

31	30	29	28	27	26	25	24	23	22	21	20	19	18	17	16
Res.	Res.	Res.	Res.	Res.	Res.	Res.	Res.	Res.	Res.	Res.	Res.	Res.	Res.	Res.	Res.
15	14	13	12	11	10	9	8	7	6	5	4	3	2	1	0
PU15	PU14	PU13	PU12	PU11	PU10	PU9	PU8	PU7	PU6	PU5	PU4	PU3	PU2	PU1	PU0
rw	rw	rw	rw	rw	rw	rw	rw	rw	rw	rw	rw	rw	rw	rw	rw

Bits 31:16 Reserved, must be kept at reset value.

Bits 15:0 **PUy**: Port C pull-up bit y (y=0..15)
When set, this bit activates the pull-up on PC[y] when APC bit is set in PWR_CR3 register. The pull-up is not activated if the corresponding PDy bit is also set.

5.4.13 Power Port C pull-down control register (PWR_PDCRC)

Address offset: 0x34.

Reset value: 0x0000 0000. This register is not reset when exiting Standby modes and with PWRRST bit in the RCC_APB1RSTR1 register.

Access: Additional APB cycles are needed to access this register vs. a standard APB access (3 for a write and 2 for a read).

31	30	29	28	27	26	25	24	23	22	21	20	19	18	17	16
Res.	Res.	Res.	Res.	Res.	Res.	Res.	Res.	Res.	Res.	Res.	Res.	Res.	Res.	Res.	Res.
15	14	13	12	11	10	9	8	7	6	5	4	3	2	1	0
PD15	PD14	PD13	PD12	PD11	PD10	PD9	PD8	PD7	PD6	PD5	PD4	PD3	PD2	PD1	PD0
rw	rw	rw	rw	rw	rw	rw	rw	rw	rw	rw	rw	rw	rw	rw	rw

Bits 31:16 Reserved, must be kept at reset value.

Bits 15:0 **PDy**: Port C pull-down bit y (y=0..15)
When set, this bit activates the pull-down on PC[y] when APC bit is set in PWR_CR3 register.

5.4.14 Power Port D pull-up control register (PWR_PUCRD)

Address offset: 0x38.

Reset value: 0x0000 0000. This register is not reset when exiting Standby modes and with PWRRST bit in the RCC_APB1RSTR1 register.

Access: Additional APB cycles are needed to access this register vs. a standard APB access (3 for a write and 2 for a read).

31	30	29	28	27	26	25	24	23	22	21	20	19	18	17	16
Res.	Res.	Res.	Res.	Res.	Res.	Res.	Res.	Res.	Res.	Res.	Res.	Res.	Res.	Res.	Res.
15	14	13	12	11	10	9	8	7	6	5	4	3	2	1	0
PU15	PU14	PU13	PU12	PU11	PU10	PU9	PU8	PU7	PU6	PU5	PU4	PU3	PU2	PU1	PU0
rw	rw	rw	rw	rw	rw	rw	rw	rw	rw	rw	rw	rw	rw	rw	rw

Bits 31:16 Reserved, must be kept at reset value.

Bits 15:0 **PUy**: Port D pull-up bit y (y=0..15)
When set, this bit activates the pull-up on PD[y] when APC bit is set in PWR_CR3 register. The pull-up is not activated if the corresponding PDy bit is also set.

5.4.15 Power Port D pull-down control register (PWR_PDCRD)

Address offset: 0x3C.

Reset value: 0x0000 0000. This register is not reset when exiting Standby modes and with PWRRST bit in the RCC_APB1RSTR1 register.

Access: Additional APB cycles are needed to access this register vs. a standard APB access (3 for a write and 2 for a read).

31	30	29	28	27	26	25	24	23	22	21	20	19	18	17	16
Res.	Res.	Res.	Res.	Res.	Res.	Res.	Res.	Res.	Res.	Res.	Res.	Res.	Res.	Res.	Res.
15	14	13	12	11	10	9	8	7	6	5	4	3	2	1	0
PD15	PD14	PD13	PD12	PD11	PD10	PD9	PD8	PD7	PD6	PD5	PD4	PD3	PD2	PD1	PD0
rw	rw	rw	rw	rw	rw	rw	rw	rw	rw	rw	rw	rw	rw	rw	rw

Bits 31:16 Reserved, must be kept at reset value.

Bits 15:0 **PDy**: Port D pull-down bit y (y=0..15)
When set, this bit activates the pull-down on PD[y] when APC bit is set in PWR_CR3 register.

5.4.16 Power Port E pull-up control register (PWR_PUCRE)

Address offset: 0x20.

Reset value: 0x0000 0000. This register is not reset when exiting Standby modes and with PWRRST bit in the RCC_APB1RSTR1 register.

Access: Additional APB cycles are needed to access this register vs. a standard APB access (3 for a write and 2 for a read).

31	30	29	28	27	26	25	24	23	22	21	20	19	18	17	16
Res.	Res.	Res.	Res.	Res.	Res.	Res.	Res.	Res.	Res.	Res.	Res.	Res.	Res.	Res.	Res.
15	14	13	12	11	10	9	8	7	6	5	4	3	2	1	0
PU15	PU14	PU13	PU12	PU11	PU10	PU9	PU8	PU7	PU6	PU5	PU4	PU3	PU2	PU1	PU0
rw	rw	rw	rw	rw	rw	rw	rw	rw	rw	rw	rw	rw	rw	rw	rw

Bits 31:16 Reserved, must be kept at reset value.

Bits 15:0 **PUy**: Port E pull-up bit y (y=0..15)
When set, this bit activates the pull-up on PE[y] when APC bit is set in PWR_CR3 register. The pull-up is not activated if the corresponding PDy bit is also set.

5.4.17 Power Port E pull-down control register (PWR_PDCRE)

Address offset: 0x44.

Reset value: 0x0000 0000. This register is not reset when exiting Standby modes and with PWRRST bit in the RCC_APB1RSTR1 register.

Access: Additional APB cycles are needed to access this register vs. a standard APB access (3 for a write and 2 for a read).

31	30	29	28	27	26	25	24	23	22	21	20	19	18	17	16
Res.	Res.	Res.	Res.	Res.	Res.	Res.	Res.	Res.	Res.	Res.	Res.	Res.	Res.	Res.	Res.
15	14	13	12	11	10	9	8	7	6	5	4	3	2	1	0
PD15	PD14	PD13	PD12	PD11	PD10	PD9	PD8	PD7	PD6	PD5	PD4	PD3	PD2	PD1	PD0
rw	rw	rw	rw	rw	rw	rw	rw	rw	rw	rw	rw	rw	rw	rw	rw

Bits 31:16 Reserved, must be kept at reset value.

Bits 15:0 **PDy**: Port E pull-down bit y (y=0..15)
When set, this bit activates the pull-down on PE[y] when APC bit is set in PWR_CR3 register.

5.4.18 Power Port H pull-up control register (PWR_PUCRH)

Address offset: 0x58.

Reset value: 0x0000 0000. This register is not reset when exiting Standby modes and with PWRRST bit in the RCC_APB1RSTR1 register.

Access: Additional APB cycles are needed to access this register vs. a standard APB access (3 for a write and 2 for a read).

31	30	29	28	27	26	25	24	23	22	21	20	19	18	17	16
Res.	Res.	Res.	Res.	Res.	Res.	Res.	Res.	Res.	Res.	Res.	Res.	Res.	Res.	Res.	Res.
15	14	13	12	11	10	9	8	7	6	5	4	3	2	1	0
Res.	Res.	Res.	Res.	Res.	Res.	Res.	Res.	Res.	Res.	Res.	Res.	PU3	Res.	PU1	PU0
												rw		rw	rw

Bits 31:4 Reserved, must be kept at reset value.

Bit 3 **PU3:** Port H pull-up bit 3

When set, this bit activates the pull-up on PH[y] when APC bit is set in PWR_CR3 register. The pull-up is not activated if the corresponding PDy bit is also set.

Bit 2 Reserved, must be kept at reset value.

Bits 1:0 **PUy**: Port H pull-up bit y (y=0..1)

When set, this bit activates the pull-up on PH[y] when APC bit is set in PWR_CR3 register. The pull-up is not activated if the corresponding PDy bit is also set.

5.4.19 Power Port H pull-down control register (PWR_PDCRH)

Address offset: 0x5C.

Reset value: 0x0000 0000. This register is not reset when exiting Standby modes and with PWRRST bit in the RCC_APB1RSTR1 register.

Access: Additional APB cycles are needed to access this register vs. a standard APB access (3 for a write and 2 for a read).

31	30	29	28	27	26	25	24	23	22	21	20	19	18	17	16
Res.	Res.	Res.	Res.	Res.	Res.	Res.	Res.	Res.	Res.	Res.	Res.	Res.	Res.	Res.	Res.
15	14	13	12	11	10	9	8	7	6	5	4	3	2	1	0
Res.	Res.	Res.	Res.	Res.	Res.	Res.	Res.	Res.	Res.	Res.	Res.	PD3	Res.	PD1	PD0
												rw		rw	rw

Bits 31:4 Reserved, must be kept at reset value.

Bit 3 **PD3:** Port H pull-down bit 3

When set, this bit activates the pull-down on PH[y] when APC bit is set in PWR_CR3 register.

Bit 2 Reserved, must be kept at reset value.

Bits 1:0 **PDy**: Port H pull-down bit y (y=0..1)

When set, this bit activates the pull-down on PH[y] when APC bit is set in PWR_CR3 register.

5.4.20 PWR register map and reset value table

Table 29. PWR register map and reset values

Offset	Register	31	30	29	28	27	26	25	24	23	22	21	20	19	18	17	16	15	14	13	12	11	10	9	8	7	6	5	4	3	2	1	0
0x000	PWR_CR1	Res.	Res.	Res.	Res.	Res.	Res.	Res.	Res.	Res.	Res.	Res.	Res.	Res.	Res.	Res.	Res.	Res.	LPR	Res.	Res.	Res.	VOS [1:0]		DBP	Res.	Res.	Res.	Res.	Res.	LPMS [2:0]		
	Reset value																		0				0	1	0						0	0	0
0x004	PWR_CR2	Res.	Res.	Res.	Res.	Res.	Res.	Res.	Res.	Res.	Res.	Res.	Res.	Res.	Res.	Res.	Res.	Res.	Res.	Res.	Res.	Res.	USV	Res.	Res.	PVME4	PVME3	Res.	PVME1	PLS [2:0]			PVDE
	Reset value																						0			0	0		0	0	0	0	0
0x008	PWR_CR3	Res.	Res.	Res.	Res.	Res.	Res.	Res.	Res.	Res.	Res.	Res.	Res.	Res.	Res.	Res.	Res.	EIWUL	Res.	Res.	Res.	Res.	APC	Res.	RRS	Res.	Res.	Res.	EWUP5	EWUP4	EWUP3	EWUP2	EWUP1
	Reset value																	1					0		0				0	0	0	0	0
0x00C	PWR_CR4	Res.	Res.	Res.	Res.	Res.	Res.	Res.	Res.	Res.	Res.	Res.	Res.	Res.	Res.	Res.	Res.	Res.	Res.	Res.	Res.	Res.	Res.	VBRS	VBE	Res.	Res.	Res.	WP5	WP4	WP3	WP2	WP1
	Reset value																							0	0				0	0	0	0	0
0x010	PWR_SR1	Res.	Res.	Res.	Res.	Res.	Res.	Res.	Res.	Res.	Res.	Res.	Res.	Res.	Res.	Res.	Res.	WUFI	Res.	Res.	Res.	Res.	Res.	Res.	CSBF	Res.	Res.	Res.	CWUF5	CWUF4	CWUF3	CWUF2	CWUF1
	Reset value																	0							0				0	0	0	0	0
0x014	PWR_SR2	Res.	Res.	Res.	Res.	Res.	Res.	Res.	Res.	Res.	Res.	Res.	Res.	Res.	Res.	Res.	Res.	PVMO4	PVMO3	Res.	PVMO1	PVDO	VOSF	REGLPF	REGLPS	Res.	Res.	Res.	Res.	Res.	Res.	Res.	Res.
	Reset value																	0	0		0	0	0	0	0								
0x018	PWR_SCR	Res.	Res.	Res.	Res.	Res.	Res.	Res.	Res.	Res.	Res.	Res.	Res.	Res.	Res.	Res.	Res.	Res.	Res.	Res.	Res.	Res.	Res.	Res.	SBF	Res.	Res.	Res.	WUF5	WUF4	WUF3	WUF2	WUF1
	Reset value																								0				0	0	0	0	0
0x020	PWR_PUCRA	Res.	Res.	Res.	Res.	Res.	Res.	Res.	Res.	Res.	Res.	Res.	Res.	Res.	Res.	Res.	Res.	PU15	Res.	PU13	PU12	PU11	PU10	PU9	PU8	PU7	PU6	PU5	PU4	PU3	PU2	PU1	PU0
	Reset value																	0		0	0	0	0	0	0	0	0	0	0	0	0	0	0
0x024	PWR_PDCRA	Res.	Res.	Res.	Res.	Res.	Res.	Res.	Res.	Res.	Res.	Res.	Res.	Res.	Res.	Res.	Res.	Res.	PD14	Res.	PD12	PD11	PD10	PD9	PD8	PD7	PD6	PD5	PD4	PD3	PD2	PD1	PD0
	Reset value																		0		0	0	0	0	0	0	0	0	0	0	0	0	0
0x028	PWR_PUCRB	Res.	Res.	Res.	Res.	Res.	Res.	Res.	Res.	Res.	Res.	Res.	Res.	Res.	Res.	Res.	Res.	PU15	PU14	PU13	PU12	PU11	PU10	PU9	PU8	PU7	PU6	PU5	PU4	PU3	PU2	PU1	PU0
	Reset value																	0	0	0	0	0	0	0	0	0	0	0	0	0	0	0	0
0x02C	PWR_PDCRB	Res.	Res.	Res.	Res.	Res.	Res.	Res.	Res.	Res.	Res.	Res.	Res.	Res.	Res.	Res.	Res.	PD15	PD14	PD13	PD12	PD11	PD10	PD9	PD8	PD7	PD6	PD5	Res.	PD3	PD2	PD1	PD0
	Reset value																	0	0	0	0	0	0	0	0	0	0	0		0	0	0	0
0x030	PWR_PUCRC	Res.	Res.	Res.	Res.	Res.	Res.	Res.	Res.	Res.	Res.	Res.	Res.	Res.	Res.	Res.	Res.	PU15	PU14	PU13	PU12	PU11	PU10	PU9	PU8	PU7	PU6	PU5	PU4	PU3	PU2	PU1	PU0
	Reset value																	0	0	0	0	0	0	0	0	0	0	0	0	0	0	0	0
0x034	PWR_PDCRC	Res.	Res.	Res.	Res.	Res.	Res.	Res.	Res.	Res.	Res.	Res.	Res.	Res.	Res.	Res.	Res.	PD15	PD14	PD13	PD12	PD11	PD10	PD9	PD8	PD7	PD6	PD5	PD4	PD3	PD2	PD1	PD0
	Reset value																	0	0	0	0	0	0	0	0	0	0	0	0	0	0	0	0
0x038	PWR_PUCRD	Res.	Res.	Res.	Res.	Res.	Res.	Res.	Res.	Res.	Res.	Res.	Res.	Res.	Res.	Res.	Res.	PU15	PU14	PU13	PU12	PU11	PU10	PU9	PU8	PU7	PU6	PU5	PU4	PU3	PU2	PU1	PU0
	Reset value																	0	0	0	0	0	0	0	0	0	0	0	0	0	0	0	0
0x03C	PWR_PDCRD	Res.	Res.	Res.	Res.	Res.	Res.	Res.	Res.	Res.	Res.	Res.	Res.	Res.	Res.	Res.	Res.	PD15	PD14	PD13	PD12	PD11	PD10	PD9	PD8	PD7	PD6	PD5	PD4	PD3	PD2	PD1	PD0
	Reset value																	0	0	0	0	0	0	0	0	0	0	0	0	0	0	0	0
0x040	PWR_PUCRE	Res.	Res.	Res.	Res.	Res.	Res.	Res.	Res.	Res.	Res.	Res.	Res.	Res.	Res.	Res.	Res.	PU15	PU14	PU13	PU12	PU11	PU10	PU9	PU8	PU7	PU6	PU5	PU4	PU3	PU2	PU1	PU0
	Reset value																	0	0	0	0	0	0	0	0	0	0	0	0	0	0	0	0

Table 29. PWR register map and reset values (continued)

Offset	Register	31	30	29	28	27	26	25	24	23	22	21	20	19	18	17	16	15	14	13	12	11	10	9	8	7	6	5	4	3	2	1	0
0x044	PWR_PDCRE	Res	Res	Res	Res	Res	Res	Res	Res	Res	Res	Res	Res	Res	Res	Res	Res	PD15	PD14	PD13	PD12	PD11	PD10	PD9	PD8	PD7	PD6	PD5	PD4	PD3	PD2	PD1	PD0
	Reset value																	0	0	0	0	0	0	0	0	0	0	0	0	0	0	0	0
0x058	PWR_PUCRH	Res	Res	Res	Res	Res	Res	Res	Res	Res	Res	Res	Res	Res	Res	Res	Res	Res	Res	Res	Res	Res	Res	Res	Res	Res	Res	Res	Res	PU3	Res	PU1	PU0
	Reset value																													0		0	0
0x05C	PWR_PDCRH	Res	Res	Res	Res	Res	Res	Res	Res	Res	Res	Res	Res	Res	Res	Res	Res	Res	Res	Res	Res	Res	Res	Res	Res	Res	Res	Res	Res	PD3	Res	PD1	PD0
	Reset value																													0		0	0

Refer to *Section 2.2.2: Memory map and register boundary addresses* for the register boundary addresses.

6 Reset and clock control (RCC)

6.1 Reset

There are three types of reset, defined as system reset, power reset and backup domain reset.

6.1.1 Power reset

A power reset is generated when one of the following events occurs:

1. a Brown-out reset (BOR).
2. when exiting from Standby mode.
3. when exiting from Shutdown mode.

A Brown-out reset, including power-on or power-down reset (POR/PDR), sets all registers to their reset values except the Backup domain.

When exiting Standby mode, all registers in the V_{CORE} domain are set to their reset value. Registers outside the V_{CORE} domain (RTC, WKUP, IWDG, and Standby/Shutdown modes control) are not impacted.

When exiting Shutdown mode, a Brown-out reset is generated, resetting all registers except those in the Backup domain.

6.1.2 System reset

A system reset sets all registers to their reset values except the reset flags in the clock control/status register (RCC_CSR) and the registers in the Backup domain.

A system reset is generated when one of the following events occurs:

1. A low level on the NRST pin (external reset)
2. Window watchdog event (WWDG reset)
3. Independent watchdog event (IWDG reset)
4. A firewall event (FIREWALL reset)
5. A software reset (SW reset) (see *Software reset*)
6. Low-power mode security reset (see *Low-power mode security reset*)
7. Option byte loader reset (see *Option byte loader reset*)
8. A Brown-out reset

The reset source can be identified by checking the reset flags in the Control/Status register, RCC_CSR (see *Section 6.4.29: Control/status register (RCC_CSR)*).

These sources act on the NRST pin and it is always kept low during the delay phase. The RESET service routine vector is fixed at address 0x0000_0004 in the memory map.

The system reset signal provided to the device is output on the NRST pin. The pulse generator guarantees a minimum reset pulse duration of 20 µs for each internal reset source. In case of an external reset, the reset pulse is generated while the NRST pin is asserted low.

In case on an internal reset, the internal pull-up R_{PU} is deactivated in order to save the power consumption through the pull-up resistor.

Figure 11. Simplified diagram of the reset circuit

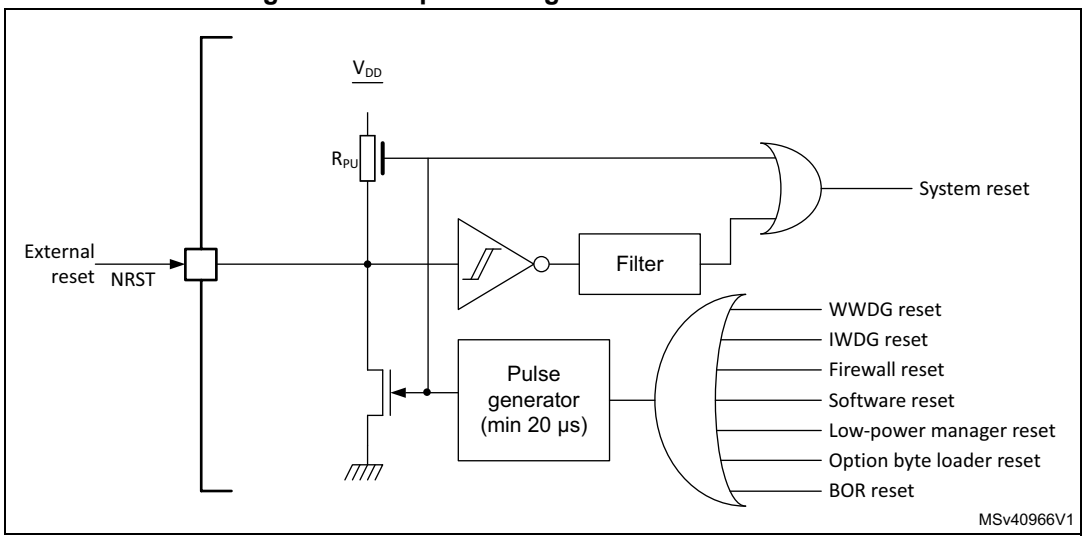

Software reset

The SYSRESETREQ bit in Cortex®-M4 Application Interrupt and Reset Control Register must be set to force a software reset on the device (refer to the STM32F3xx/F4xx/L4xx Cortex®-M4 programming manual (PM0214)).

Low-power mode security reset

To prevent that critical applications mistakenly enter a low-power mode, two low-power mode security resets are available. If enabled in option bytes, the resets are generated in the following conditions:

1. Entering Standby mode: this type of reset is enabled by resetting nRST_STDBY bit in User option Bytes. In this case, whenever a Standby mode entry sequence is successfully executed, the device is reset instead of entering Standby mode.
2. Entering Stop mode: this type of reset is enabled by resetting nRST_STOP bit in User option bytes. In this case, whenever a Stop mode entry sequence is successfully executed, the device is reset instead of entering Stop mode.
3. Entering Shutdown mode: this type of reset is enabled by resetting nRST_SHDW bit in User option bytes. In this case, whenever a Shutdown mode entry sequence is successfully executed, the device is reset instead of entering Shutdown mode.

For further information on the User Option Bytes, refer to *Section 3.4.1: Option bytes description*.

Option byte loader reset

The option byte loader reset is generated when the OBL_LAUNCH bit (bit 27) is set in the FLASH_CR register. This bit is used to launch the option byte loading by software.

6.1.3 Backup domain reset

The backup domain has two specific resets.

A backup domain reset is generated when one of the following events occurs:

1. Software reset, triggered by setting the BDRST bit in the *Backup domain control register (RCC_BDCR)*.
2. V_{DD} or V_{BAT} power on, if both supplies have previously been powered off.

A backup domain reset only affects the LSE oscillator, the RTC, the Backup registers and the RCC Backup domain control register.

6.2 Clocks

Four different clock sources can be used to drive the system clock (SYSCLK):

- HSI16 (high speed internal)16 MHz RC oscillator clock
- MSI (multispeed internal) RC oscillator clock
- HSE oscillator clock, from 4 to 48 MHz
- PLL clock

The MSI is used as system clock source after startup from Reset, configured at 4 MHz.

The devices have the following additional clock sources:

- 32 kHz low speed internal RC (LSI RC) which drives the independent watchdog and optionally the RTC used for Auto-wakeup from Stop and Standby modes.
- 32.768 kHz low speed external crystal (LSE crystal) which optionally drives the real-time clock (RTCCLK).
- RC 48 MHz internal clock sources (HSI48) to potentially drive the USB Full Speed[(a)], the SDMMC and the RNG.

Each clock source can be switched on or off independently when it is not used, to optimize power consumption.

Several prescalers can be used to configure the AHB frequency, the high speed APB (APB2) and the low speed APB (APB1) domains. The maximum frequency of the AHB, the APB1 and the APB2 domains is 80 MHz.

a. Not available for STM32L431xx devices.

All the peripheral clocks are derived from their bus clock (HCLK, PCLK1 or PCLK2) except:

- The 48 MHz clock, used for USB FS[a], SDMMC and RNG. This clock is derived (selected by software) from one of the four following sources:
  - main PLL VCO (PLL48M1CLK)
  - PLLSAI1 VCO (PLL48M2CLK)
  - MSI clock.
  - HSI48 internal oscillator.

  When the MSI clock is auto-trimmed with the LSE, it can be used by the USB FS[a] device.

  The HSI48 can be coupled to the clock recovery system allowing adequate clock connection for the USB FS[a] device (Crystal less solution).
- The ADCs clock which is derived (selected by software) from one of the three following sources:
  - system clock (SYSCLK)
  - PLLSAI1 VCO (PLLADC1CLK).
- The U(S)ARTs clocks which are derived (selected by software) from one of the four following sources:
  - system clock (SYSCLK)
  - HSI16 clock
  - LSE clock
  - APB1 or APB2 clock (PCLK1 or PCLK2 depending on which APB is mapped the U(S)ART)

  The wakeup from Stop mode is supported only when the clock is HSI16 or LSE.
- The I^2Cs clocks which are derived (selected by software) from one of the three following sources:
  - system clock (SYSCLK)
  - HSI16 clock
  - APB1 clock (PCLK1)

  The wakeup from Stop mode is supported only when the clock is HSI16.
- The SAI1 clock which is derived (selected by software) from one of the four following sources:
  - an external clock mapped on SAI1_EXTCLK for SAI1.
  - PLLSAI1 VCO (PLLSAI2CLK)
  - main PLL VCO (PLLSAI1CLK)
  - HSI16 clock

  The SAI1 can used the HSI16 clock when it is master just to detect an audio activity on the data line, in reception mode. Potentially, it allows to reduce power consumption

a. Not available for STM32L431xx devices.

without having to switch ON the dedicated PLL when there is no audio data flow in reception.

- The SWPMI1 clock which is derived (selected by software) from one of the two following sources:
  - HSI16 clock
  - APB1 clock (PCLK1)

  The wakeup from Stop mode is supported only when the clock is HSI16.
- The low-power timers (LPTIMx) clock which are derived (selected by software) from one of the five following sources:
  - LSI clock
  - LSE clock
  - HSI16 clock
  - APB1 clock (PCLK1)
  - External clock mapped on LPTIMx_IN1

  The functionality in Stop mode (including wakeup) is supported only when the clock is LSI or LSE, or in external clock mode.
- The RTC and LCD[(a)] clock which is derived (selected by software) from one of the three following sources:
  - LSE clock
  - LSI clock
  - HSE clock divided by 32

  The functionality in Stop mode (including wakeup) is supported only when the clock is LSI or LSE.
- The IWDG clock which is always the LSI clock.

The RCC feeds the Cortex® System Timer (SysTick) external clock with the AHB clock (HCLK) divided by 8. The SysTick can work either with this clock or directly with the Cortex® clock (HCLK), configurable in the SysTick Control and Status Register.

FCLK acts as Cortex®-M4 free-running clock. For more details refer to the STM32F3 and STM32F4 Series Cortex®-M4 programming manual (PM0214)

a. Not available for STM32L431xx devices.

Figure 12. Clock tree

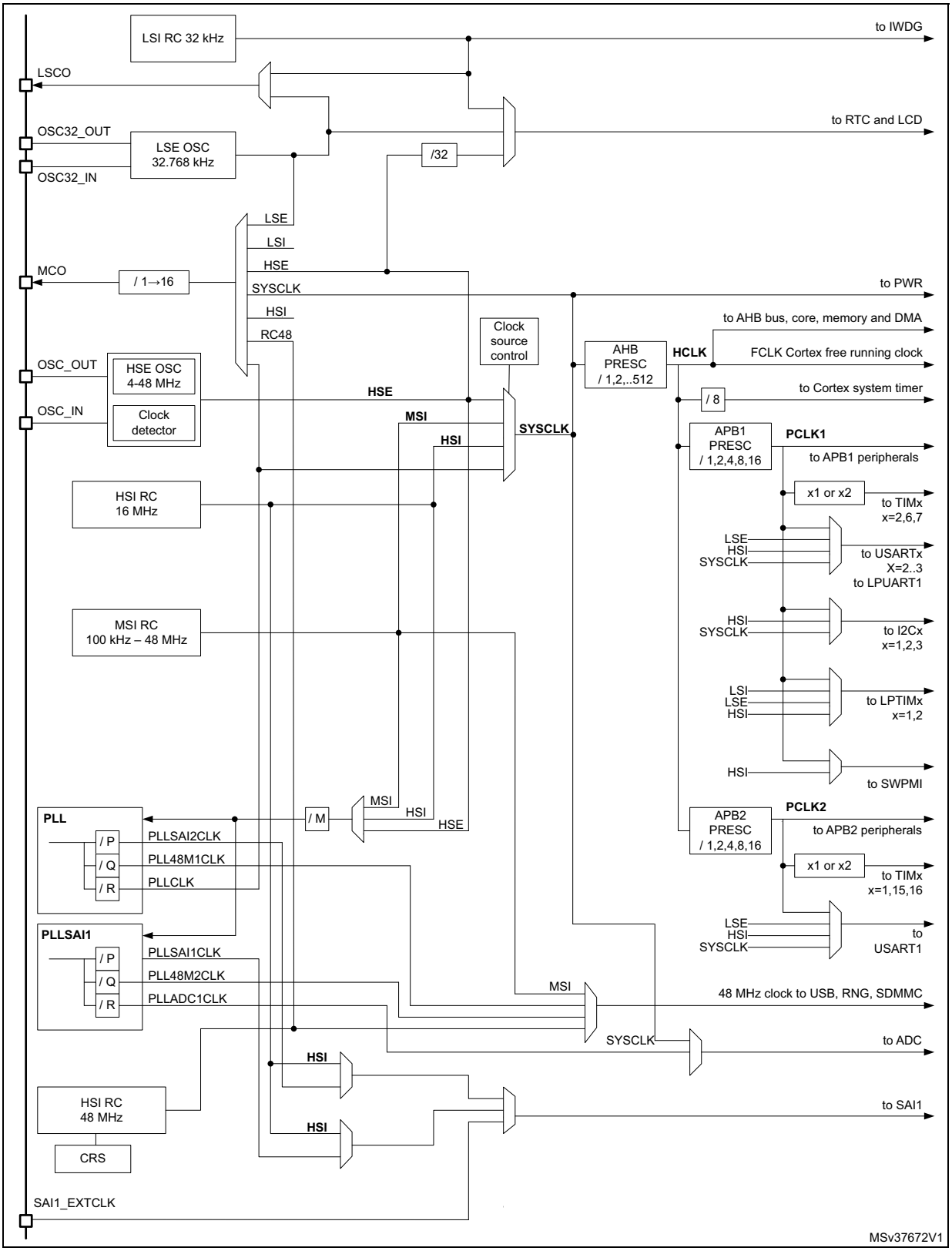

1. For full details about the internal and external clock source characteristics, please refer to the “Electrical characteristics” section in your device datasheet.
2. The ADC clock can be derived from the AHB clock of the ADC bus interface, divided by a programmable factor (1, 2 or 4). When the programmable factor is ‘1’, the AHB prescaler must be equal to ‘1’.

6.2.1 HSE clock

The high speed external clock signal (HSE) can be generated from two possible clock sources:

- HSE external crystal/ceramic resonator
- HSE user external clock

The resonator and the load capacitors have to be placed as close as possible to the oscillator pins in order to minimize output distortion and startup stabilization time. The loading capacitance values must be adjusted according to the selected oscillator.

Figure 13. HSE/ LSE clock sources

Clock source	Hardware configuration
External clock (available on some package, please refer to the corresponding datasheet)	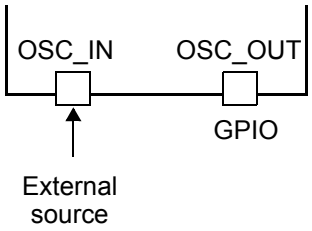
External clock (available on some package, please refer to the corresponding datasheet)	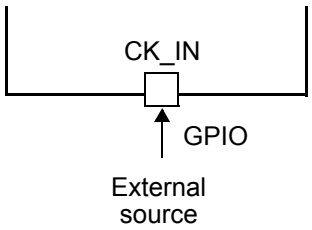
Crystal/Ceramic resonators	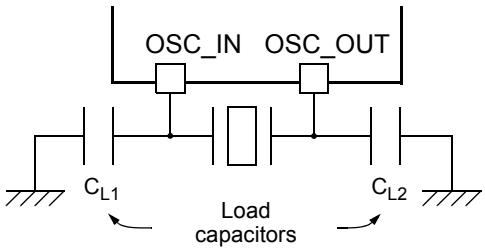

External crystal/ceramic resonator (HSE crystal)

The 4 to 48 MHz external oscillator has the advantage of producing a very accurate rate on the main clock.

The associated hardware configuration is shown in *Figure 13*. Refer to the electrical characteristics section of the *datasheet* for more details.

The HSERDY flag in the *Clock control register (RCC_CR)* indicates if the HSE oscillator is stable or not. At startup, the clock is not released until this bit is set by hardware. An interrupt can be generated if enabled in the *Clock interrupt enable register (RCC_CIER)*.

The HSE Crystal can be switched on and off using the HSEON bit in the *Clock control register (RCC_CR)*.

External source (HSE bypass)

In this mode, an external clock source must be provided. It can have a frequency of up to 48 MHz. You select this mode by setting the HSEBYP and HSEON bits in the *Clock control register (RCC_CR)*. The external clock signal (square, sinus or triangle) with ~40-60 % duty cycle depending on the frequency (refer to the datasheet) has to drive the following pin (see *Figure 13*).

- On devices where OSC_IN and OSC_OUT pins are available: OSC_IN pin must be driven while the OSC_OUT pin can be used as a GPIO.
- Otherwise, the CK_IN pin must be driven.

Note: For details on pin availability, refers to the pinout section in the corresponding device datasheet.

To minimize the consumption, it is recommended to use the square signal.

6.2.2 HSI16 clock

The HSI16 clock signal is generated from an internal 16 MHz RC Oscillator.

The HSI16 RC oscillator has the advantage of providing a clock source at low cost (no external components). It also has a faster startup time than the HSE crystal oscillator however, even with calibration the frequency is less accurate than an external crystal oscillator or ceramic resonator.

The HSI16 clock can be selected as system clock after wakeup from Stop modes (Stop 0, Stop 1 or Stop 2). Refer to *Section 6.3: Low-power modes*. It can also be used as a backup clock source (auxiliary clock) if the HSE crystal oscillator fails. Refer to *Section 6.2.10: Clock security system (CSS)*.

Calibration

RC oscillator frequencies can vary from one chip to another due to manufacturing process variations, this is why each device is factory calibrated by ST for 1 % accuracy at T_A=25°C.

After reset, the factory calibration value is loaded in the HSICAL[7:0] bits in the *Internal clock sources calibration register (RCC_ICSCR)*.

If the application is subject to voltage or temperature variations this may affect the RC oscillator speed. You can trim the HSI16 frequency in the application using the HSITRIM[4:0] bits in the *Internal clock sources calibration register (RCC_ICSCR)*.

For more details on how to measure the HSI16 frequency variation, refer to *Section 6.2.17: Internal/external clock measurement with TIM15/TIM16*.

The HSIRDY flag in the *Clock control register (RCC_CR)* indicates if the HSI16 RC is stable or not. At startup, the HSI16 RC output clock is not released until this bit is set by hardware.

The HSI16 RC can be switched on and off using the HSION bit in the *Clock control register (RCC_CR)*.

The HSI16 signal can also be used as a backup source (Auxiliary clock) if the HSE crystal oscillator fails. Refer to *Section 6.2.10: Clock security system (CSS) on page 175*.

6.2.3 MSI clock

The MSI clock signal is generated from an internal RC oscillator. Its frequency range can be adjusted by software by using the MSIRANGE[3:0] bits in the *Clock control register (RCC_CR)*. Twelve frequency ranges are available: 100 kHz, 200 kHz, 400 kHz, 800 kHz, 1 MHz, 2 MHz, 4 MHz (default value), 8 MHz, 16 MHz, 24 MHz, 32 MHz and 48 MHz.

The MSI clock is used as system clock after restart from Reset, wakeup from Standby and Shutdown low-power modes. After restart from Reset, the MSI frequency is set to its default value 4 MHz. Refer to *Section 6.3: Low-power modes*.

The MSI clock can be selected as system clock after a wakeup from Stop mode (Stop 0, Stop 1 or Stop 2). Refer to *Section 6.3: Low-power modes*. It can also be used as a backup clock source (auxiliary clock) if the HSE crystal oscillator fails. Refer to *Section 6.2.10: Clock security system (CSS)*.

The MSI RC oscillator has the advantage of providing a low-cost (no external components) low-power clock source. In addition, when used in PLL-mode with the LSE, it provides a very accurate clock source which can be used by the USB FS[(a)] device, and feed the main PLL to run the system at the maximum speed 80 MHz.

The MSIRDY flag in the *Clock control register (RCC_CR)* indicates wether the MSI RC is stable or not. At startup, the MSI RC output clock is not released until this bit is set by hardware. The MSI RC can be switched on and off by using the MSION bit in the *Clock control register (RCC_CR)*.

Hardware auto calibration with LSE (PLL-mode)

When a 32.768 kHz external oscillator is present in the application, it is possible to configure the MSI in a PLL-mode by setting the MSIPLLEN bit in the *Clock control register (RCC_CR)*. When configured in PLL-mode, the MSI automatically calibrates itself thanks to the LSE. This mode is available for all MSI frequency ranges. At 48 MHz, the MSI in PLL-mode can be used for the USB FS[(a)] device, saving the need of an external high-speed crystal.

Software calibration

The MSI RC oscillator frequency can vary from one chip to another due to manufacturing process variations, this is why each device is factory calibrated by ST for 1 % accuracy at an ambient temperature, TA, of 25 °C. After reset, the factory calibration value is loaded in the MSICAL[7:0] bits in the *Internal clock sources calibration register (RCC_ICSCR)*. If the application is subject to voltage or temperature variations, this may affect the RC oscillator

a. Not available for STM32L431xx devices.

speed. You can trim the MSI frequency in the application by using the MSITRIM[7:0] bits in the RCC_ICSCR register. For more details on how to measure the MSI frequency variation please refer to *Section 6.2.17: Internal/external clock measurement with TIM15/TIM16*.

6.2.4 HSI48 clock

The HSI48 clock signal is generated from an internal 48 MHz RC oscillator and can be used directly for USB[(a)] and for random number generator (RNG) as well as SDMMC.

The internal 48 MHz RC oscillator is mainly dedicated to provide a high precision clock to the USB[(a)] peripheral by means of a special Clock Recovery System (CRS) circuitry. The CRS can use the USB[(a)] SOF signal, the LSE or an external signal to automatically and quickly adjust the oscillator frequency on-fly. It is disabled as soon as the system enters Stop or Standby mode. When the CRS is not used, the HSI48 RC oscillator runs on its default frequency which is subject to manufacturing process variations.

For more details on how to configure and use the CRS peripheral please refer to *Section 7: Clock recovery system (CRS)*.

The HSI48RDY flag in the Clock recovery RC register (RCC_CRRCR) indicates whether the HSI48 RC oscillator is stable or not. At startup, the HSI48 RCoscillator output clock is not released until this bit is set by hardware.

The HSI48 can be switched on and off using the HSI48ON bit in the Clock recovery RC register (RCC_CRRCR).

6.2.5 PLL

The device embeds 2 PLLs: PLL, PLLSAI1. Each PLL provides up to three independent outputs. The internal PLLs can be used to multiply the HSI16, HSE or MSI output clock frequency. The PLLs input frequency must be between 4 and 16 MHz. The selected clock source is divided by a programmable factor PLLM from 1 to 8 to provide a clock frequency in the requested input range. Refer to *Figure 12: Clock tree* and *PLL configuration register (RCC_PLLCFGR)*.

The PLLs configuration (selection of the input clock and multiplication factor) must be done before enabling the PLL. Once the PLL is enabled, these parameters cannot be changed.

To modify the PLL configuration, proceed as follows:

1. Disable the PLL by setting PLLON to 0 in *Clock control register (RCC_CR)*.
2. Wait until PLLRDY is cleared. The PLL is now fully stopped.
3. Change the desired parameter.
4. Enable the PLL again by setting PLLON to 1.
5. Enable the desired PLL outputs by configuring PLLPEN, PLLQEN, PLLREN in *PLL configuration register (RCC_PLLCFGR)*.

An interrupt can be generated when the PLL is ready, if enabled in the *Clock interrupt enable register (RCC_CIER)*.

The same procedure is applied for changing the configuration of the PLLSAI1:

a. Not available for STM32L431xx devices.

1. Disable the PLLSAI1/PLLSAI2 by setting PLLSAI1ON to 0 in *Clock control register (RCC_CR)*.
2. Wait until PLLSAI1RDY is cleared. The PLLSAI1 is now fully stopped.
3. Change the desired parameter.
4. Enable the PLLSAI1 again by setting PLLSAI1ON to 1.
5. Enable the desired PLL outputs by configuring PLLSAI1PEN, PLLSAI1QEN, PLLSAI1REN in *PLLSAI1 configuration register (RCC_PLLSAI1CFGR)*.

The PLL output frequency must not exceed 80 MHz.

The enable bit of each PLL output clock (PLLPEN, PLLQEN, PLLREN, PLLSAI1PEN, PLLSAI1QEN, PLLSAI1REN) can be modified at any time without stopping the corresponding PLL. PLLREN cannot be cleared if PLLCLK is used as system clock.

6.2.6 LSE clock

The LSE crystal is a 32.768 kHz Low Speed External crystal or ceramic resonator. It has the advantage of providing a low-power but highly accurate clock source to the real-time clock peripheral (RTC) for clock/calendar or other timing functions.

The LSE crystal is switched on and off using the LSEON bit in *Backup domain control register (RCC_BDCR)*. The crystal oscillator driving strength can be changed at runtime using the LSEDRV[1:0] bits in the *Backup domain control register (RCC_BDCR)* to obtain the best compromise between robustness and short start-up time on one side and low-power-consumption on the other side. The LSE drive can be decreased to the lower drive capability (LSEDRV=00) when the LSE is ON. However, once LSEDRV is selected, the drive capability can not be increased if LSEON=1.

The LSERDY flag in the *Backup domain control register (RCC_BDCR)* indicates whether the LSE crystal is stable or not. At startup, the LSE crystal output clock signal is not released until this bit is set by hardware. An interrupt can be generated if enabled in the *Clock interrupt enable register (RCC_CIER)*.

External source (LSE bypass)

In this mode, an external clock source must be provided. It can have a frequency of up to 1 MHz. You select this mode by setting the LSEBYP and LSEON bits in the *AHB1 peripheral clocks enable in Sleep and Stop modes register (RCC_AHB1SMENR)*. The external clock signal (square, sinus or triangle) with ~50 % duty cycle has to drive the OSC32_IN pin while the OSC32_OUT pin can be used as GPIO. See *Figure 13*.

6.2.7 LSI clock

The LSI RC acts as a low-power clock source that can be kept running in Stop and Standby mode for the independent watchdog (IWDG), RTC and LCD[a]. The clock frequency is 32 kHz. For more details, refer to the electrical characteristics section of the datasheets.

The LSI RC can be switched on and off using the LSION bit in the *Control/status register (RCC_CSR)*.

a. Not available for STM32L431xx devices.

The LSIRDY flag in the *Control/status register (RCC_CSR)* indicates if the LSI oscillator is stable or not. At startup, the clock is not released until this bit is set by hardware. An interrupt can be generated if enabled in the *Clock interrupt enable register (RCC_CIER)*.

6.2.8 System clock (SYSCLK) selection

Four different clock sources can be used to drive the system clock (SYSCLK):

- MSI oscillator
- HSI16 oscillator
- HSE oscillator
- PLL

The system clock maximum frequency is 80 MHz. After a system reset, the MSI oscillator, at 4 MHz, is selected as system clock. When a clock source is used directly or through the PLL as a system clock, it is not possible to stop it.

A switch from one clock source to another occurs only if the target clock source is ready (clock stable after startup delay or PLL locked). If a clock source which is not yet ready is selected, the switch will occur when the clock source becomes ready. Status bits in the *Internal clock sources calibration register (RCC_ICSCR)* indicate which clock(s) is (are) ready and which clock is currently used as a system clock.

6.2.9 Clock source frequency versus voltage scaling

The following table gives the different clock source frequencies depending on the product voltage range.

Table 30. Clock source frequency

Product voltage range	Clock frequency			
	MSI	HSI16	HSE	PLL/PLLSAI1
Range 1	48 MHz	16 MHz	48 MHz	80 MHz (VCO max = 344 MHz)
Range 2	24 MHz range	16 MHz	26 MHz	26 MHz (VCO max = 128 MHz)

6.2.10 Clock security system (CSS)

Clock Security System can be activated by software. In this case, the clock detector is enabled after the HSE oscillator startup delay, and disabled when this oscillator is stopped.

If a failure is detected on the HSE clock, the HSE oscillator is automatically disabled, a clock failure event is sent to the break input of the advanced-control timers (TIM1 and TIM15/16) and an interrupt is generated to inform the software about the failure (Clock Security System Interrupt CSSI), allowing the MCU to perform rescue operations. The CSSI is linked to the Cortex®-M4 NMI (Non-Maskable Interrupt) exception vector.

Note: Once the CSS is enabled and if the HSE clock fails, the CSS interrupt occurs and a NMI is automatically generated. The NMI will be executed indefinitely unless the CSS interrupt pending bit is cleared. As a consequence, in the NMI ISR user must clear the CSS interrupt by setting the CSSC bit in the Clock interrupt clear register (RCC_CICR).

If the HSE oscillator is used directly or indirectly as the system clock (indirectly means: it is used as PLL input clock, and the PLL clock is used as system clock), a detected failure causes a switch of the system clock to the MSI or the HSI16 oscillator depending on the STOPWUCK configuration in the *Clock configuration register (RCC_CFGR)*, and the disabling of the HSE oscillator. If the HSE clock (divided or not) is the clock entry of the PLL used as system clock when the failure occurs, the PLL is disabled too.

6.2.11 Clock security system on LSE

A Clock Security System on LSE can be activated by software writing the LSECSSON bit in the *Control/status register (RCC_CSR)*. This bit can be disabled only by a hardware reset or RTC software reset, or after a failure detection on LSE. LSECSSON must be written after LSE and LSI are enabled (LSEON and LSION enabled) and ready (LSERDY and LSIRDY set by hardware), and after the RTC clock has been selected by RTCSEL.

The CSS on LSE is working in all modes except VBAT. It is working also under system reset (excluding power on reset). If a failure is detected on the external 32 kHz oscillator, the LSE clock is no longer supplied to the RTC but no hardware action is made to the registers. If the MSI was in PLL-mode, this mode is disabled.

In Standby mode a wakeup is generated. In other modes an interrupt can be sent to wakeup the software (see *Clock interrupt enable register (RCC_CIER)*, *Clock interrupt flag register (RCC_CIFR)*, *Clock interrupt clear register (RCC_CICR)*).

The software MUST then disable the LSECSSON bit, stop the defective 32 kHz oscillator (disabling LSEON), and change the RTC clock source (no clock or LSI or HSE, with RTCSEL), or take any required action to secure the application.

The frequency of LSE oscillator have to be higher than 30 kHz to avoid false positive CSS detection.

6.2.12 ADC clock

The ADC clock is derived from the system clock, or from the PLLSAI1 output. It can reach 80 MHz and can be divided by the following prescalers values: 1,2,4,6,8,10,12,16,32,64,128 or 256 by configuring the ADC1_CCR register. It is asynchronous to the AHB clock. Alternatively, the ADC clock can be derived from the AHB clock of the ADC bus interface, divided by a programmable factor (1, 2 or 4). This programmable factor is configured using the CKMODE bit fields in the ADC1_CCR.

If the programmed factor is ‘1’, the AHB prescaler must be set to ‘1’.

6.2.13 RTC clock

The RTCCLK clock source can be either the HSE/32, LSE or LSI clock. It is selected by programming the RTCSEL[1:0] bits in the *Backup domain control register (RCC_BDCR)*. This selection cannot be modified without resetting the Backup domain. The system must always be configured so as to get a PCLK frequency greater then or equal to the RTCCLK frequency for a proper operation of the RTC.

The LSE clock is in the Backup domain, whereas the HSE and LSI clocks are not. Consequently:

- If LSE is selected as RTC clock:
  - The RTC continues to work even if the V_{DD} supply is switched off, provided the V_{BAT} supply is maintained.
- If LSI is selected as the RTC clock:
  - The RTC state is not guaranteed if the V_{DD} supply is powered off.
- If the HSE clock divided by a prescaler is used as the RTC clock:
  - The RTC state is not guaranteed if the V_{DD} supply is powered off or if the internal voltage regulator is powered off (removing power from the V_{CORE} domain).

When the RTC clock is LSE or LSI, the RTC remains clocked and functional under system reset.

6.2.14 Timer clock

The timer clock frequencies are automatically defined by hardware. There are two cases:

1. If the APB prescaler equals 1, the timer clock frequencies are set to the same frequency as that of the APB domain.
2. Otherwise, they are set to twice (×2) the frequency of the APB domain.

6.2.15 Watchdog clock

If the Independent watchdog (IWDG) is started by either hardware option or software access, the LSI oscillator is forced ON and cannot be disabled. After the LSI oscillator temporization, the clock is provided to the IWDG.

6.2.16 Clock-out capability

- MCO

  The microcontroller clock output (MCO) capability allows the clock to be output onto the external MCO pin. One of eight clock signals can be selected as the MCO clock.
  - LSI
  - LSE
  - SYSCLK
  - HSI16
  - HSI48
  - HSE
  - PLLCLK
  - MSI

  The selection is controlled by the MCOSEL[3:0] bits of the *Clock configuration register (RCC_CFGR)*. The selected clock can be divided with the MCOPRE[2:0] field of the *Clock configuration register (RCC_CFGR)*.
- LSCO

  Another output (LSCO) allows a low speed clock to be output onto the external LSCO pin:
  - LSI
  - LSE

  This output remains available in Stop (Stop 0, Stop 1 and Stop 2) and Standby modes. The selection is controlled by the LSCOSEL, and enabled with the LSCOEN in the *Backup domain control register (RCC_BDCR)*.

The configuration registers of the corresponding GPIO port must be programmed in alternate function mode.

6.2.17 Internal/external clock measurement with TIM15/TIM16

It is possible to indirectly measure the frequency of all on-board clock sources by mean of the TIM15 or TIM16 channel 1 input capture, as represented on *Figure 14* and *Figure 15*

Figure 14. Frequency measurement with TIM15 in capture mode

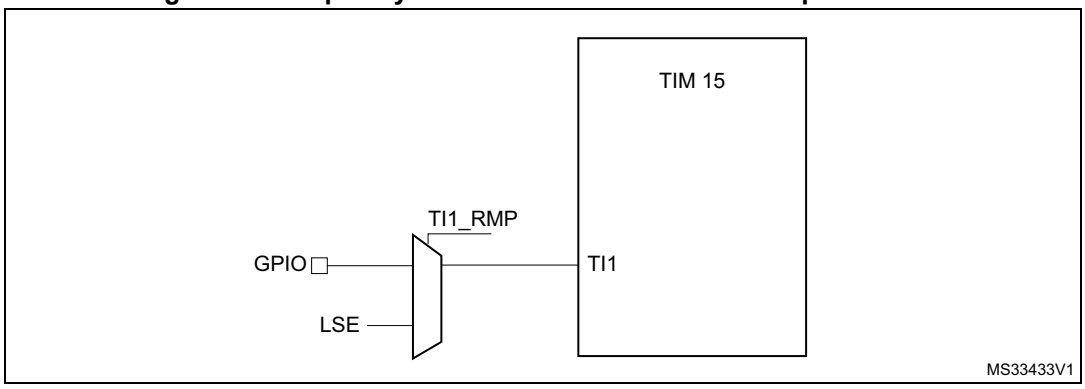

The input capture channel of the Timer 15 can be a GPIO line or an internal clock of the MCU. This selection is performed through the TI1_RMP bit in the TIM15_OR register. The possibilities are the following ones:

- TIM15 Channel1 is connected to the GPIO. Refer to the alternate function mapping in the device datasheets.
- TIM15 Channel1 is connected to the LSE.

Figure 15. Frequency measurement with TIM16 in capture mode

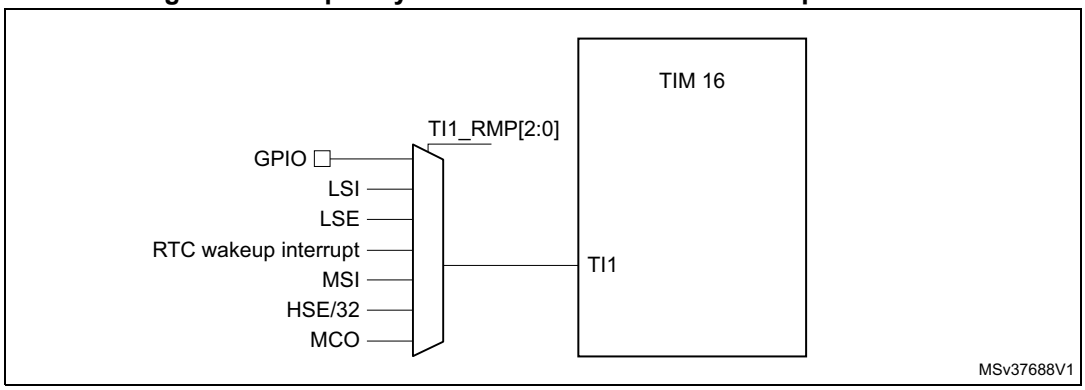

The input capture channel of the Timer 16 can be a GPIO line or an internal clock of the MCU. This selection is performed through the TI1_RMP[1:0] bits in the TIM16_OR register. The possibilities are the following ones:

- TIM16 Channel1 is connected to the GPIO. Refer to the alternate function mapping in the device datasheets.
- TIM16 Channel1 is connected to the LSI clock.
- TIM16 Channel1 is connected to the LSE clock.
- TIM16 Channel1 is connected to the RTC wakeup interrupt signal. In this case the RTC interrupt should be enabled.
- TIM16 Channel1 is connected to the MSI clock.
- TIM16 Channel1 is connected to the HSE/32 clock.
- TIM16 Channel1 is connected to the microcontroller clock output (MCO), this selection is controlled by the MCOSEL[3:0] bits of the clock configuration register (RCC_CFGR)

Calibration of the HSI16 and the MSI

For TIM15 and TIM16, the primary purpose of connecting the LSE to the channel 1 input capture is to be able to precisely measure the HSI16 and MSI system clocks (for this, either the HSI16 or MSI should be used as the system clock source). The number of HSI16 (MSI, respectively) clock counts between consecutive edges of the LSE signal provides a measure of the internal clock period. Taking advantage of the high precision of LSE crystals (typically a few tens of ppm's), it is possible to determine the internal clock frequency with the same resolution, and trim the source to compensate for manufacturing-process- and/or temperature- and voltage-related frequency deviations.

The MSI and HSI16 oscillator both have dedicated user-accessible calibration bits for this purpose.

The basic concept consists in providing a relative measurement (e.g. the HSI16/LSE ratio): the precision is therefore closely related to the ratio between the two clock sources. The higher the ratio is, the better the measurement will be.

If LSE is not available, HSE/32 will be the better option in order to reach the most precise calibration possible.

It is however not possible to have a good enough resolution when the MSI clock is low (typically below 1 MHz). In this case, it is advised to:

- accumulate the results of several captures in a row
- use the timer's input capture prescaler (up to 1 capture every 8 periods)
- use the RTC wakeup interrupt signal (when the RTC is clocked by the LSE) as the input for the channel1 input capture. This improves the measurement precision. For this purpose the RTC wakeup interrupt must be enable.

Calibration of the LSI

The calibration of the LSI will follow the same pattern that for the HSI16, but changing the reference clock. It will be necessary to connect LSI clock to the channel 1 input capture of the TIM16. Then define the HSE as system clock source, the number of his clock counts between consecutive edges of the LSI signal provides a measure of the internal low speed clock period.

The basic concept consists in providing a relative measurement (e.g. the HSE/LSI ratio): the precision is therefore closely related to the ratio between the two clock sources. The higher the ratio is, the better the measurement will be.

6.2.18 Peripheral clock enable register (RCC_AHBxENR, RCC_APBxENRy)

Each peripheral clock can be enabled by the xxxxEN bit of the RCC_AHBxENR, RCC_APBxENRy registers.

When the peripheral clock is not active, the peripheral registers read or write accesses are not supported.

The enable bit has a synchronization mechanism to create a glitch free clock for the peripheral. After the enable bit is set, there is a 2 clock cycles delay before the clock be active.

Caution: Just after enabling the clock for a peripheral, software must wait for a delay before accessing the peripheral registers.

6.3 Low-power modes

- AHB and APB peripheral clocks, including DMA clock, can be disabled by software.
- Sleep and Low Power Sleep modes stops the CPU clock. The memory interface clocks (Flash and SRAM1 and SRAM2 interfaces) can be stopped by software during sleep

mode. The AHB to APB bridge clocks are disabled by hardware during Sleep mode when all the clocks of the peripherals connected to them are disabled.

- Stop modes (Stop 0, Stop 1 and Stop 2) stops all the clocks in the V_{CORE} domain and disables the two PLL, the HSI16, the MSI and the HSE oscillators.

  All U(S)ARTs, LPUARTs and I^2Cs have the capability to enable the HSI16 oscillator even when the MCU is in Stop mode (if HSI16 is selected as the clock source for that peripheral).

  All U(S)ARTs and LPUARTs can also be driven by the LSE oscillator when the system is in Stop mode (if LSE is selected as clock source for that peripheral) and the LSE oscillator is enabled (LSEON). In that case the LSE remains always ON in Stop mode (they do not have the capability to turn on the LSE oscillator).
- Standby and Shutdown modes stops all the clocks in the V_{CORE} domain and disables the PLL, the HSI16, the MSI and the HSE oscillators.

The CPU's deepsleep mode can be overridden for debugging by setting the DBG_STOP or DBG_STANDBY bits in the DBGMCU_CR register.

When leaving the Stop modes (Stop 0, Stop 1 or Stop 2), the system clock is either MSI or HSI16, depending on the software configuration of the STOPWUCK bit in the RCC_CFGR register. The frequency (range and user trim) of the MSI oscillator is the one configured before entering Stop mode. The user trim of HSI16 is kept. If the MSI was in PLL-mode before entering Stop mode, the PLL-mode stabilization time must be waited for after wakeup even if the LSE was kept ON during the Stop mode.

When leaving the Standby and Shutdown modes, the system clock is MSI. The MSI frequency at wakeup from Standby mode is configured with the MSISRANGE is the RCC_CSR register, from 1 to 8 MHz. The MSI frequency at wakeup from Shutdown mode is 4 MHz. The user trim is lost.

If a Flash memory programming operation is on going, Stop, Standby and Shutdown modes entry is delayed until the Flash memory interface access is finished. If an access to the APB domain is ongoing, Stop, Standby and Shutdown modes entry is delayed until the APB access is finished.

6.4 RCC registers

6.4.1 Clock control register (RCC_CR)

Address offset: 0x00

Reset value: 0x0000 0063. HSEBYP is not affected by reset.

Access: no wait state, word, half-word and byte access

31	30	29	28	27	26	25	24	23	22	21	20	19	18	17	16
Res.	Res.	Res.	Res.	PLL SAI1 RDY	PLL SAI1 ON	PLL RDY	PLLON	Res.	Res.	Res.	Res.	CSS ON	HSE BYP	HSE RDY	HSE ON
				r	rw	r	rw					rs	rw	r	rw

15	14	13	12	11	10	9	8	7	6	5	4	3	2	1	0
Res.	Res.	Res.	Res.	HSI ASFS	HSI RDY	HSI KERON	HSION	MSIRANGE[3:0]				MSI RGSEL	MSI PLLEN	MSI RDY	MSION
				rw	r	rw	rw	rw	rw	rw	rw	rs	rw	r	rw

Bits 31:28 Reserved, must be kept at reset value.

Bit 27 **PLLSAI1RDY:** SAI1 PLL clock ready flag

Set by hardware to indicate that the PLLSAI1 is locked.
0: PLLSAI1 unlocked
1: PLLSAI1 locked

Bit 26 **PLLSAI1ON:** SAI1 PLL enable

Set and cleared by software to enable PLLSAI1.
Cleared by hardware when entering Stop, Standby or Shutdown mode.
0: PLLSAI1 OFF
1: PLLSAI1 ON

Bit 25 **PLLRDY:** Main PLL clock ready flag

Set by hardware to indicate that the main PLL is locked.
0: PLL unlocked
1: PLL locked

Bit 24 **PLLON:** Main PLL enable

Set and cleared by software to enable the main PLL.
Cleared by hardware when entering Stop, Standby or Shutdown mode. This bit cannot be reset if the PLL clock is used as the system clock.
0: PLL OFF
1: PLL ON

Bits 23:20 Reserved, must be kept at reset value.

Bit 19 **CSSON:** Clock security system enable

Set by software to enable the clock security system. When CSSON is set, the clock detector is enabled by hardware when the HSE oscillator is ready, and disabled by hardware if a HSE clock failure is detected. This bit is set only and is cleared by reset.
0: Clock security system OFF (clock detector OFF)
1: Clock security system ON (Clock detector ON if the HSE oscillator is stable, OFF if not).

Bit 18 **HSEBYP:** HSE crystal oscillator bypass

Set and cleared by software to bypass the oscillator with an external clock. The external clock must be enabled with the HSEON bit set, to be used by the device. The HSEBYP bit can be written only if the HSE oscillator is disabled.

0: HSE crystal oscillator not bypassed

1: HSE crystal oscillator bypassed with external clock

Bit 17 **HSERDY:** HSE clock ready flag

Set by hardware to indicate that the HSE oscillator is stable.

0: HSE oscillator not ready

1: HSE oscillator ready

Note: Once the HSEON bit is cleared, HSERDY goes low after 6 HSE clock cycles.

Bit 16 **HSEON:** HSE clock enable

Set and cleared by software.

Cleared by hardware to stop the HSE oscillator when entering Stop, Standby or Shutdown mode. This bit cannot be reset if the HSE oscillator is used directly or indirectly as the system clock.

0: HSE oscillator OFF

1: HSE oscillator ON

Bits 15:12 Reserved, must be kept at reset value.

Bit 11 **HSIASFS:** HSI16 automatic start from Stop

Set and cleared by software. When the system wakeup clock is MSI, this bit is used to wakeup the HSI16 is parallel of the system wakeup.

0: HSI16 oscillator is not enabled by hardware when exiting Stop mode with MSI as wakeup clock.

1: HSI16 oscillator is enabled by hardware when exiting Stop mode with MSI as wakeup clock.

Bit 10 **HSIRDY:** HSI16 clock ready flag

Set by hardware to indicate that HSI16 oscillator is stable. This bit is set only when HSI16 is enabled by software by setting HSION.

0: HSI16 oscillator not ready

1: HSI16 oscillator ready

Note: Once the HSION bit is cleared, HSIRDY goes low after 6 HSI16 clock cycles.

Bit 9 **HSIKERON:** HSI16 always enable for peripheral kernels.

Set and cleared by software to force HSI16 ON even in Stop modes. The HSI16 can only feed USARTs and I^2Cs peripherals configured with HSI16 as kernel clock. Keeping the HSI16 ON in Stop mode allows to avoid slowing down the communication speed because of the HSI16 startup time. This bit has no effect on HSION value.

0: No effect on HSI16 oscillator.

1: HSI16 oscillator is forced ON even in Stop mode.

Bit 8 **HSION:** HSI16 clock enable

Set and cleared by software.

Cleared by hardware to stop the HSI16 oscillator when entering Stop, Standby or Shutdown mode.

Set by hardware to force the HSI16 oscillator ON when STOPWUCK=1 or HSIASFS = 1 when leaving Stop modes, or in case of failure of the HSE crystal oscillator.

This bit is set by hardware if the HSI16 is used directly or indirectly as system clock.

0: HSI16 oscillator OFF

1: HSI16 oscillator ON

Bits 7:4 **MSIRANGE[3:0]:** MSI clock ranges

These bits are configured by software to choose the frequency range of MSI when MSIRGSEL is set.12 frequency ranges are available:

0000: range 0 around 100 kHz
0001: range 1 around 200 kHz
0010: range 2 around 400 kHz
0011: range 3 around 800 kHz
0100: range 4 around 1M Hz
0101: range 5 around 2 MHz
0110: range 6 around 4 MHz (reset value)
0111: range 7 around 8 MHz
1000: range 8 around 16 MHz
1001: range 9 around 24 MHz
1010: range 10 around 32 MHz
1011: range 11 around 48 MHz
others: not allowed (hardware write protection)

Note: Warning: MSIRANGE can be modified when MSI is OFF (MSION=0) or when MSI is ready (MSIRDY=1). MSIRANGE must NOT be modified when MSI is ON and NOT ready (MSION=1 and MSIRDY=0)

Bit 3 **MSIRGSEL:** MSI clock range selection

Set by software to select the MSI clock range with MSIRANGE[3:0]. Write 0 has no effect. After a standby or a reset MSIRGSEL is at 0 and the MSI range value is provided by MSISRANGE in CSR register.

0: MSI Range is provided by MSISRANGE[3:0] in RCC_CSR register
1: MSI Range is provided by MSIRANGE[3:0] in the RCC_CR register

Bit 2 **MSIPLLEN:** MSI clock PLL enable

Set and cleared by software to enable/ disable the PLL part of the MSI clock source. MSIPLLEN must be enabled after LSE is enabled (LSEON enabled) and ready (LSERDY set by hardware).There is a hardware protection to avoid enabling MSIPLLEN if LSE is not ready.

This bit is cleared by hardware when LSE is disabled (LSEON = 0) or when the Clock Security System on LSE detects a LSE failure (refer to RCC_CSR register).

0: MSI PLL OFF
1: MSI PLL ON

Bit 1 **MSIRDY:** MSI clock ready flag

This bit is set by hardware to indicate that the MSI oscillator is stable.

0: MSI oscillator not ready
1: MSI oscillator ready

Note: Once the MSION bit is cleared, MSIRDY goes low after 6 MSI clock cycles.

Bit 0 **MSION:** MSI clock enable

This bit is set and cleared by software.

Cleared by hardware to stop the MSI oscillator when entering Stop, Standby or Shutdown mode.

Set by hardware to force the MSI oscillator ON when exiting Standby or Shutdown mode.

Set by hardware to force the MSI oscillator ON when STOPWUCK=0 when exiting from Stop modes, or in case of a failure of the HSE oscillator

Set by hardware when used directly or indirectly as system clock.

0: MSI oscillator OFF
1: MSI oscillator ON

6.4.2 Internal clock sources calibration register (RCC_ICSCR)

Address offset: 0x04

Reset value: 0x10XX 00XX where X is factory-programmed.

Access: no wait state, word, half-word and byte access

31	30	29	28	27	26	25	24	23	22	21	20	19	18	17	16
Res.	Res.	Res.	HSITRIM[4:0]					HSICAL[7:0]							
			rw	rw	rw	rw	rw	r	r	r	r	r	r	r	r
15	14	13	12	11	10	9	8	7	6	5	4	3	2	1	0
MSITRIM[7:0]								MSICAL[7:0]							
rw	rw	rw	rw	rw	rwr	rw	rw	r	r	r	r	r	r	r	r

Bits 31:29 Reserved, must be kept at reset value.

Bits 28:24 **HSITRIM[4:0]:** HSI16 clock trimming

These bits provide an additional user-programmable trimming value that is added to the HSICAL[7:0] bits. It can be programmed to adjust to variations in voltage and temperature that influence the frequency of the HSI16.

The default value is 16, which, when added to the HSICAL value, should trim the HSI16 to 16 MHz ± 1 %.

Bits 23:16 **HSICAL[7:0]:** HSI16 clock calibration

These bits are initialized at startup with the factory-programmed HSI16 calibration trim value. When HSITRIM is written, HSICAL is updated with the sum of HSITRIM and the factory trim value.

Bits 15:8 **MSITRIM[7:0]:** MSI clock trimming

These bits provide an additional user-programmable trimming value that is added to the MSICAL[7:0] bits. It can be programmed to adjust to variations in voltage and temperature that influence the frequency of the MSI.

Bits 7:0 **MSICAL[7:0]:** MSI clock calibration

These bits are initialized at startup with the factory-programmed MSI calibration trim value. When MSITRIM is written, MSICAL is updated with the sum of MSITRIM and the factory trim value.

6.4.3 Clock configuration register (RCC_CFGR)

Address offset: 0x08

Reset value: 0x0000 0000

Access: 0 ≤ wait state ≤ 2, word, half-word and byte access

1 or 2 wait states inserted only if the access occurs during clock source switch.

From 0 to 15 wait states inserted if the access occurs when the APB or AHB prescalers values update is on going.

31	30	29	28	27	26	25	24	23	22	21	20	19	18	17	16
Res.	MCOPRE[2:0]			MCOSEL[3:0]				Res.	Res.	Res.	Res.	Res.	Res.	Res.	Res.
	rw	rw	rw	rw	rw	rw	rw								

15	14	13	12	11	10	9	8	7	6	5	4	3	2	1	0
STOP WUCK	Res.	PPRE2[2:0]			PPRE1[2:0]			HPRE[3:0]				SWS[1:0]		SW[1:0]	
rw		rw	rw	rw	rw	rw	rw	rw	rw	rw	rw	r	r	rw	rw

Bit 31 Reserved, must be kept at reset value.

Bits 30:28 **MCOPRE[2:0]:** Microcontroller clock output prescaler

These bits are set and cleared by software.

It is highly recommended to change this prescaler before MCO output is enabled.

000: MCO is divided by 1

001: MCO is divided by 2

010: MCO is divided by 4

011: MCO is divided by 8

100: MCO is divided by 16

Others: not allowed

Bits 27:24 **MCOSEL[3:0]:** Microcontroller clock output

Set and cleared by software.

0000: MCO output disabled, no clock on MCO

0001: SYSCLK system clock selected

0010: MSI clock selected.

0011: HSI16 clock selected.

0100: HSE clock selected

0101: Main PLL clock selected

0110: LSI clock selected

0111: LSE clock selected

1000: Internal HSI48 clock selected

Others: reserved

Note: This clock output may have some truncated cycles at startup or during MCO clock source switching.

Bits 23:16 Reserved, must be kept at reset value.

Bit 15 **STOPWUCK:** Wakeup from Stop and CSS backup clock selection

Set and cleared by software to select the system clock used when exiting Stop mode.

The selected clock is also used as emergency clock for the Clock Security System on HSE.

Warning: STOPWUCK must not be modified when the Clock Security System is enabled by HSECSSON in RCC_CR register and the system clock is HSE (SWS=”10”) or a switch on HSE is requested (SW=”10”).

0: MSI oscillator selected as wakeup from stop clock and CSS backup clock.

1: HSI16 oscillator selected as wakeup from stop clock and CSS backup clock

Bit 14 Reserved, must be kept at reset value.

Bits 13:11 **PPRE2[2:0]:** APB high-speed prescaler (APB2)

Set and cleared by software to control the division factor of the APB2 clock (PCLK2).

0xx: HCLK not divided

100: HCLK divided by 2

101: HCLK divided by 4

110: HCLK divided by 8

111: HCLK divided by 16

Bits 10:8 **PPRE1[2:0]:**APB low-speed prescaler (APB1)

Set and cleared by software to control the division factor of the APB1 clock (PCLK1).
0xx: HCLK not divided
100: HCLK divided by 2
101: HCLK divided by 4
110: HCLK divided by 8
111: HCLK divided by 16

Bits 7:4 **HPRE[3:0]:** AHB prescaler

Set and cleared by software to control the division factor of the AHB clock.

Caution: Depending on the device voltage range, the software has to set correctly these bits to ensure that the system frequency does not exceed the maximum allowed frequency (for more details please refer to *Section 5.1.6: Dynamic voltage scaling management*). After a write operation to these bits and before decreasing the voltage range, this register must be read to be sure that the new value has been taken into account.

0xxx: SYSCLK not divided
1000: SYSCLK divided by 2
1001: SYSCLK divided by 4
1010: SYSCLK divided by 8
1011: SYSCLK divided by 16
1100: SYSCLK divided by 64
1101: SYSCLK divided by 128
1110: SYSCLK divided by 256
1111: SYSCLK divided by 512

Bits 3:2 **SWS[1:0]:** System clock switch status

Set and cleared by hardware to indicate which clock source is used as system clock.
00: MSI oscillator used as system clock
01: HSI16 oscillator used as system clock
10: HSE used as system clock
11: PLL used as system clock

Bits 1:0 **SW[1:0]:** System clock switch

Set and cleared by software to select system clock source (SYSCLK).
Configured by HW to force MSI oscillator selection when exiting Standby or Shutdown mode.
Configured by HW to force MSI or HSI16 oscillator selection when exiting Stop mode or in case of failure of the HSE oscillator, depending on STOPWUCK value.
00: MSI selected as system clock
01: HSI16 selected as system clock
10: HSE selected as system clock
11: PLL selected as system clock

6.4.4 PLL configuration register (RCC_PLLCFGR)

Address offset: 0x0C

Reset value: 0x0000 1000

Access: no wait state, word, half-word and byte access

This register is used to configure the PLL clock outputs according to the formulas:

- f(VCO clock) = f(PLL clock input) × (PLLN / PLLM)

- f(PLL_P) = f(VCO clock) / PLLP
- f(PLL_Q) = f(VCO clock) / PLLQ
- f(PLL_R) = f(VCO clock) / PLLR

31	30	29	28	27	26	25	24	23	22	21	20	19	18	17	16
PLLPDIV[4:0]					PLLR[1:0]		PLL REN	Res.	PLLQ[1:0]		PLL QEN	Res.	Res.	PLLP	PLL PEN
rw	rw	rw	rw	rw	rw	rw	rw		rw	rw	rw			rw	rw

15	14	13	12	11	10	9	8	7	6	5	4	3	2	1	0
Res.	PLLN[7:0]							Res.	PLLM[2:0]			Res.	Res.	PLLSRC[1:0]	
	rw	rw	rw	rw	rw	rw	rw		rw	rw	rw			rw	rw

Bits 31:27 **PLLPDIV[4:0]:** Main PLL division factor for PLLSAI2CLK

Set and cleared by software to control the SAI1 clock frequency. PLLSAI2CLK output clock frequency = VCO frequency / PLLPDIV.

00000: PLLSAI2CLK is controlled by the bit PLLP

00001: Reserved.

00010: PLLSAI2CLK = VCO / 2

....

11111: PLLSAI2CLK = VCO / 31

Bits 26:25 **PLLR[1:0]:** Main PLL division factor for PLLCLK (system clock)

Set and cleared by software to control the frequency of the main PLL output clock PLLCLK. This output can be selected as system clock. These bits can be written only if PLL is disabled.

PLLCLK output clock frequency = VCO frequency / PLLR with PLLR = 2, 4, 6, or 8

00: PLLR = 2

01: PLLR = 4

10: PLLR = 6

11: PLLR = 8

Caution: The software has to set these bits correctly not to exceed 80 MHz on this domain.

Bit 24 **PLLREN:** Main PLL PLLCLK output enable

Set and reset by software to enable the PLLCLK output of the main PLL (used as system clock).

This bit cannot be written when PLLCLK output of the PLL is used as System Clock.

In order to save power, when the PLLCLK output of the PLL is not used, the value of PLLREN should be 0.

0: PLLCLK output disable

1: PLLCLK output enable

Bit 23 Reserved, must be kept at reset value.

Bits 22:21 **PLLQ[1:0]:** Main PLL division factor for PLL48M1CLK (48 MHz clock).

Set and cleared by software to control the frequency of the main PLL output clock PLL48M1CLK. This output can be selected for USB(1), RNG, SDMMC (48 MHz clock). These bits can be written only if PLL is disabled.

PLL48M1CLK output clock frequency = VCO frequency / PLLQ with PLLQ = 2, 4, 6, or 8

00: PLLQ = 2

01: PLLQ = 4

10: PLLQ = 6

11: PLLQ = 8

Caution: The software has to set these bits correctly not to exceed 80 MHz on this domain.

Bit 20 **PLLQEN:** Main PLL PLL48M1CLK output enable

Set and reset by software to enable the PLL48M1CLK output of the main PLL.

In order to save power, when the PLL48M1CLK output of the PLL is not used, the value of PLLQEN should be 0.

0: PLL48M1CLK output disable

1: PLL48M1CLK output enable

Bits 19:18 Reserved, must be kept at reset value.

Bit 17 **PLLP:** Main PLL division factor for PLLSAI2CLK (SAI1 clock).

Set and cleared by software to control the frequency of the main PLL output clock PLLSAI2CLK. This output can be selected for SAI1. These bits can be written only if PLL is disabled.

When the PLLPDIV[4:0] is set to “00000”, PLLSAI2CLK output clock frequency = VCO frequency / PLLP with PLLP =7, or 17

0: PLLP = 7

1: PLLP = 17

Caution: The software has to set these bits correctly not to exceed 80 MHz on this domain.

Bit 16 **PLLPEN:** Main PLL PLLSAI1CLK output enable

Set and reset by software to enable the PLLSAI2CLK output of the main PLL.

In order to save power, when the PLLSAI2CLK output of the PLL is not used, the value of PLLPEN should be 0.

0: PLLSAI2CLK output disable

1: PLLSAI2CLK output enable

Bit 15 Reserved, must be kept at reset value.

Bits 14:8 **PLLN[6:0]:** Main PLL multiplication factor for VCO

Set and cleared by software to control the multiplication factor of the VCO. These bits can be written only when the PLL is disabled.
VCO output frequency = VCO input frequency x PLLN with 8 =< PLLN =< 86
0000000: PLLN = 0 wrong configuration
0000001: PLLN = 1 wrong configuration
...
0000111: PLLN = 7 wrong configuration
0001000: PLLN = 8
0001001: PLLN = 9
...
1010101: PLLN = 85
1010110: PLLN = 86
1010111: PLLN = 87 wrong configuration
...
1111111: PLLN = 127 wrong configuration

Caution: The software has to set correctly these bits to assure that the VCO output frequency is between 64 and 344 MHz.

Bit 7 Reserved, must be kept at reset value.

Bits 6:4 **PLLM:** Division factor for the main PLL and audio PLL (PLLSAI1) input clock

Set and cleared by software to divide the PLL and PLLSAI1 input clock before the VCO. These bits can be written only when all PLLs are disabled.
VCO input frequency = PLL input clock frequency / PLLM with 1 <= PLLM <= 8
000: PLLM = 1
001: PLLM = 2
010: PLLM = 3
011: PLLM = 4
100: PLLM = 5
101: PLLM = 6
110: PLLM = 7
111: PLLM = 8

Caution: The software has to set these bits correctly to ensure that the VCO input frequency ranges from 4 to 16 MHz.

Bits 3:2 Reserved, must be kept at reset value.

Bits 1:0 **PLLSRC:** Main PLL and PLLSAI1 entry clock source

Set and cleared by software to select PLL and PLLSAI1 clock source. These bits can be written only when PLL and PLLSAI1 are disabled.
In order to save power, when no PLL is used, the value of PLLSRC should be 00.
00: No clock sent to PLL and PLLSAI1
01: MSI clock selected as PLL and PLLSAI1 clock entry
10: HSI16 clock selected as PLL and PLLSAI1 clock entry
11: HSE clock selected as PLL and PLLSAI1 clock entry

1. Not available for STM32L431xx devices.

6.4.5 PLLSAI1 configuration register (RCC_PLLSAI1CFGR)

Address offset: 0x10

Reset value: 0x0000 1000

Access: no wait state, word, half-word and byte access

This register is used to configure the PLLSAI1 clock outputs according to the formulas:

- f(VCOSAI1 clock) = f(PLL clock input) × (PLLSAI1N / PLLM)
- f(PLLSAI1_P) = f(VCOSAI1 clock) / PLLSAI1P
- f(PLLSAI1_Q) = f(VCOSAI1 clock) / PLLSAI1Q
- f(PLLSAI1_R) = f(VCOSAI1 clock) / PLLSAI1R

31	30	29	28	27	26	25	24	23	22	21	20	19	18	17	16
PLLSAI1PDIV[4:0]					PLLSAI1R[1:0]		PLL SAI1 REN	Res.	PLLSAI1Q[1:0]		PLL SAI1 QEN	Res.	Res.	PLL SAI1P	PLL SAI1 PEN
rw	rw	rw	rw	rw	rw	rw	rw		rw	rw	rw			rw	rw

15	14	13	12	11	10	9	8	7	6	5	4	3	2	1	0
Res.	PLLSAI1N[6:0]							Res.	Res.	Res.	Res.	Res.	Res.	Res.	Res.
	rw	rw	rw	rw	rw	rw	rw								

Bits 31:27 **PLLSAI1PDIV[4:0]:** PLLSAI1 division factor for PLLSAI1CLK

Set and cleared by software to control the SAI1 clock frequency. PLLSAI1CLK output clock frequency = VCOSAI1 frequency / PLLPDIV.

00000: PLLSAI1CLK is controlled by the bit PLLP
00001: Reserved.
00010: PLLSAI1CLK = VCOSAI1 / 2
....
11111: PLLSAI1CLK = VCOSAI1 / 31

Bits 26:25 **PLLSAI1R[1:0]:** PLLSAI1 division factor for PLLADC1CLK (ADC clock)

Set and cleared by software to control the frequency of the SAI1PLL output clock PLLADC1CLK. This output can be selected as ADC clock. These bits can be written only if SAI1PLL is disabled.

PLLADC1CLK output clock frequency = VCOSAI1 frequency / PLLSAI1R with PLLSAI1R = 2, 4, 6, or 8

00: PLLSAI1R = 2
01: PLLSAI1R = 4
10: PLLSAI1R = 6
11: PLLSAI1R = 8

Bit 24 **PLLSAI1REN:** PLLSAI1 PLLADC1CLK output enable

Set and reset by software to enable the PLLADC1CLK output of the SAI1PLL (used as clock for ADC).

In order to save power, when the PLLADC1CLK output of the SAI1PLL is not used, the value of PLLSAI1REN should be 0.

0: PLLADC1CLK output disable
1: PLLADC1CLK output enable

Bit 23 Reserved, must be kept at reset value.

Bits 22:21 **PLLSAI1Q[1:0]:** SAI1PLL division factor for PLL48M2CLK (48 MHz clock)

Set and cleared by software to control the frequency of the SAI1PLL output clock PLL48M2CLK. This output can be selected for USB(1), RNG, SDMMC (48 MHz clock). These bits can be written only if SAI1PLL is disabled.

PLL48M2CLK output clock frequency = VCOSAI1 frequency / PLLQ with PLLQ = 2, 4, 6, or 8

00: PLLQ = 2

01: PLLQ = 4

10: PLLQ = 6

11: PLLQ = 8

Caution: The software has to set these bits correctly not to exceed 80 MHz on this domain.

Bit 20 **PLLSAI1QEN:** SAI1PLL PLL48M2CLK output enable

Set and reset by software to enable the PLL48M2CLK output of the SAI1PLL.

In order to save power, when the PLL48M2CLK output of the SAI1PLL is not used, the value of PLLSAI1QEN should be 0.

0: PLL48M2CLK output disable

1: PLL48M2CLK output enable

Bits 19:18 Reserved, must be kept at reset value.

Bit 17 **PLLSAI1P:** SAI1PLL division factor for PLLSAI1CLK (SAI1 clock).

Set and cleared by software to control the frequency of the SAI1PLL output clock PLLSAI1CLK. This output can be selected for SAI1. These bits can be written only if SAI1PLL is disabled.

When the PLLSAI1PDIV[4:0] is set to “00000”, PLLSAI1CLK output clock frequency = VCOSAI1 frequency / PLLSAI1P with PLLSAI1P =7, or 17

0: PLLSAI1P = 7

1: PLLSAI1P = 17

Bit 16 **PLLSAI1PEN:** SAI1PLL PLLSAI1CLK output enable

Set and reset by software to enable the PLLSAI1CLK output of the SAI1PLL.

In order to save power, when the PLLSAI1CLK output of the SAI1PLL is not used, the value of PLLSAI1PEN should be 0.

0: PLLSAI1CLK output disable

1: PLLSAI1CLK output enable

Bit 15 Reserved, must be kept at reset value.

Bits 14:8 **PLLSAI1N[6:0]:** SAI1PLL multiplication factor for VCO

Set and cleared by software to control the multiplication factor of the VCO. These bits can be written only when the SAI1PLL is disabled.

VCOSAI1 output frequency = VCOSAI1 input frequency x PLLSAI1N

with 8 =< PLLSAI1N =< 86

0000000: PLLSAI1N = 0 wrong configuration

0000001: PLLSAI1N = 1 wrong configuration

...

0000111: PLLSAI1N = 7 wrong configuration

0001000: PLLSAI1N = 8

0001001: PLLSAI1N = 9

...

1010101: PLLSAI1N = 85

1010110: PLLSAI1N = 86

1010111: PLLSAI1N = 87 wrong configuration

...

1111111: PLLSAI1N = 127 wrong configuration

Caution: The software has to set correctly these bits to ensure that the VCO output frequency is between 64 and 344 MHz.

Bits 7:0 Reserved, must be kept at reset value.

1. Not available for STM32L431xx devices.

6.4.6 Clock interrupt enable register (RCC_CIER)

Address offset: 0x18

Reset value: 0x0000 0000

Access: no wait state, word, half-word and byte access

31	30	29	28	27	26	25	24	23	22	21	20	19	18	17	16
Res.	Res.	Res.	Res.	Res.	Res.	Res.	Res.	Res.	Res.	Res.	Res.	Res.	Res.	Res.	Res.

15	14	13	12	11	10	9	8	7	6	5	4	3	2	1	0
Res.	Res.	Res.	Res.	Res.	HSI48 RDYIE	LSE CSSIE	Res.	Res.	PLL SAI1 RDYIE	PLL RDYIE	HSE RDYIE	HSI RDYIE	MSI RDYIE	LSE RDYIE	LSI RDYIE
					rw	rw			rw	rw	rw	rw	rw	rw	rw

Bits 31:11 Reserved, must be kept at reset value.

Bit 10 **HSI48RDYIE:** HSI48 ready interrupt enable

Set and cleared by software to enable/disable interrupt caused by the internal HSI48 oscillator.
0: HSI48 ready interrupt disabled
1: HSI48 ready interrupt enabled

Bit 9 **LSECSSIE:** LSE clock security system interrupt enable

Set and cleared by software to enable/disable interrupt caused by the clock security system on LSE.
0: Clock security interrupt caused by LSE clock failure disabled
1: Clock security interrupt caused by LSE clock failure enabled

Bits 8:7 Reserved, must be kept at reset value.

Bit 6 **PLLSAI1RDYIE:** PLLSAI1 ready interrupt enable

Set and cleared by software to enable/disable interrupt caused by PLSAI1L lock.
0: PLLSAI1 lock interrupt disabled
1: PLLSAI1 lock interrupt enabled

Bit 5 **PLLRDYIE:** PLL ready interrupt enable

Set and cleared by software to enable/disable interrupt caused by PLL lock.
0: PLL lock interrupt disabled
1: PLL lock interrupt enabled

Bit 4 **HSERDYIE:** HSE ready interrupt enable

Set and cleared by software to enable/disable interrupt caused by the HSE oscillator stabilization.
0: HSE ready interrupt disabled
1: HSE ready interrupt enabled

Bit 3 **HSIRDYIE:** HSI16 ready interrupt enable

Set and cleared by software to enable/disable interrupt caused by the HSI16 oscillator stabilization.
0: HSI16 ready interrupt disabled
1: HSI16 ready interrupt enabled

Bit 2 **MSIRDYIE:** MSI ready interrupt enable

Set and cleared by software to enable/disable interrupt caused by the MSI oscillator stabilization.
0: MSI ready interrupt disabled
1: MSI ready interrupt enabled

Bit 1 **LSERDYIE:** LSE ready interrupt enable

Set and cleared by software to enable/disable interrupt caused by the LSE oscillator stabilization.
0: LSE ready interrupt disabled
1: LSE ready interrupt enabled

Bit 0 **LSIRDYIE:** LSI ready interrupt enable

Set and cleared by software to enable/disable interrupt caused by the LSI oscillator stabilization.
0: LSI ready interrupt disabled
1: LSI ready interrupt enabled

6.4.7 Clock interrupt flag register (RCC_CIFR)

Address offset: 0x1C

Reset value: 0x0000 0000

Access: no wait state, word, half-word and byte access

31	30	29	28	27	26	25	24	23	22	21	20	19	18	17	16
Res.	Res.	Res.	Res.	Res.	Res.	Res.	Res.	Res.	Res.	Res.	Res.	Res.	Res.	Res.	Res.
15	**14**	**13**	**12**	**11**	**10**	**9**	**8**	**7**	**6**	**5**	**4**	**3**	**2**	**1**	**0**
Res.	Res.	Res.	Res.	Res.	HSI48 RDYF	LSE CSSF	CSSF	Res.	PLLSAI 1RDYF	PLL RDYF	HSE RDYF	HSI RDYF	MSI RDYF	LSE RDYF	LSI RDYF
					r	r	r		r	r	r	r	r	r	r

Bits 31:11 Reserved, must be kept at reset value.

Bit 10 **HSI48RDYF:** HSI48 ready interrupt flag
Set by hardware when the HSI48 clock becomes stable and HSI48RDYIE is set in a response to setting the HSI48ON (refer to *Clock recovery RC register (RCC_CRRCR)*).
Cleared by software setting the HSI48RDYC bit.
0: No clock ready interrupt caused by the HSI48 oscillator
1: Clock ready interrupt caused by the HSI48 oscillator

Bit 9 **LSECSSF:** LSE Clock security system interrupt flag
Set by hardware when a failure is detected in the LSE oscillator.
Cleared by software setting the LSECSSC bit.
0: No clock security interrupt caused by LSE clock failure
1: Clock security interrupt caused by LSE clock failure

Bit 8 **CSSF:** Clock security system interrupt flag
Set by hardware when a failure is detected in the HSE oscillator.
Cleared by software setting the CSSC bit.
0: No clock security interrupt caused by HSE clock failure
1: Clock security interrupt caused by HSE clock failure

Bit 7 Reserved, must be kept at reset value.

Bit 6 **PLLSAI1RDYF:** PLLSAI1 ready interrupt flag
Set by hardware when the PLLSAI1 locks and PLLSAI1RDYDIE is set.
Cleared by software setting the PLLSAI1RDYC bit.
0: No clock ready interrupt caused by PLLSAI1 lock
1: Clock ready interrupt caused by PLLSAI1 lock

Bit 5 **PLLRDYF:** PLL ready interrupt flag
Set by hardware when the PLL locks and PLLRDYDIE is set.
Cleared by software setting the PLLRDYC bit.
0: No clock ready interrupt caused by PLL lock
1: Clock ready interrupt caused by PLL lock

Bit 4 **HSERDYF:** HSE ready interrupt flag
Set by hardware when the HSE clock becomes stable and HSERDYDIE is set.
Cleared by software setting the HSERDYC bit.
0: No clock ready interrupt caused by the HSE oscillator
1: Clock ready interrupt caused by the HSE oscillator

Bit 3 **HSIRDYF:** HSI16 ready interrupt flag

Set by hardware when the HSI16 clock becomes stable and HSIRDYDIE is set in a response to setting the HSION (refer to *Clock control register (RCC_CR)*). When HSION is not set but the HSI16 oscillator is enabled by the peripheral through a clock request, this bit is not set and no interrupt is generated.
Cleared by software setting the HSIRDYC bit.
0: No clock ready interrupt caused by the HSI16 oscillator
1: Clock ready interrupt caused by the HSI16 oscillator

Bit 2 **MSIRDYF:** MSI ready interrupt flag

Set by hardware when the MSI clock becomes stable and MSIRDYDIE is set.
Cleared by software setting the MSIRDYC bit.
0: No clock ready interrupt caused by the MSI oscillator
1: Clock ready interrupt caused by the MSI oscillator

Bit 1 **LSERDYF:** LSE ready interrupt flag

Set by hardware when the LSE clock becomes stable and LSERDYDIE is set.
Cleared by software setting the LSERDYC bit.
0: No clock ready interrupt caused by the LSE oscillator
1: Clock ready interrupt caused by the LSE oscillator

Bit 0 **LSIRDYF:** LSI ready interrupt flag

Set by hardware when the LSI clock becomes stable and LSIRDYDIE is set.
Cleared by software setting the LSIRDYC bit.
0: No clock ready interrupt caused by the LSI oscillator
1: Clock ready interrupt caused by the LSI oscillator

6.4.8 Clock interrupt clear register (RCC_CICR)

Address offset: 0x20

Reset value: 0x0000 0000

Access: no wait state, word, half-word and byte access

31	30	29	28	27	26	25	24	23	22	21	20	19	18	17	16
Res.	Res.	Res.	Res.	Res.	Res.	Res.	Res.	Res.	Res.	Res.	Res.	Res.	Res.	Res.	Res.

15	14	13	12	11	10	9	8	7	6	5	4	3	2	1	0
Res.	Res.	Res.	Res.	Res.	HSI48 RDYC	LSE CSSC	CSSC	Res.	PLL SAI1 RDYC	PLL RDYC	HSE RDYC	HSI RDYC	MSI RDYC	LSE RDYC	LSI RDYC
					w	w	w		w	w	w	w	w	w	w

Bits 31:11 Reserved, must be kept at reset value.

Bit 10 **HSI48RDYC:** HSI48 oscillator ready interrupt clear

This bit is set by software to clear the HSI48RDYF flag.
0: No effect
1: Clear the HSI48RDYC flag

Bit 9 **LSECSSC:** LSE Clock security system interrupt clear

This bit is set by software to clear the LSECSSF flag.
0: No effect
1: Clear LSECSSF flag

Bit 8 **CSSC:** Clock security system interrupt clear
This bit is set by software to clear the CSSF flag.
0: No effect
1: Clear CSSF flag

Bit 7 Reserved, must be kept at reset value.

Bit 6 **PLLSAI1RDYC:** PLLSAI1 ready interrupt clear
This bit is set by software to clear the PLLSAI1RDYF flag.
0: No effect
1: Clear PLLSAI1RDYF flag

Bit 5 **PLLRDYC:** PLL ready interrupt clear
This bit is set by software to clear the PLLRDYF flag.
0: No effect
1: Clear PLLRDYF flag

Bit 4 **HSERDYC:** HSE ready interrupt clear
This bit is set by software to clear the HSERDYF flag.
0: No effect
1: Clear HSERDYF flag

Bit 3 **HSIRDYC:** HSI16 ready interrupt clear
This bit is set software to clear the HSIRDYF flag.
0: No effect
1: Clear HSIRDYF flag

Bit 2 **MSIRDYC:** MSI ready interrupt clear
This bit is set by software to clear the MSIRDYF flag.
0: No effect
1: MSIRDYF cleared

Bit 1 **LSERDYC:** LSE ready interrupt clear
This bit is set by software to clear the LSERDYF flag.
0: No effect
1: LSERDYF cleared

Bit 0 **LSIRDYC:** LSI ready interrupt clear
This bit is set by software to clear the LSIRDYF flag.
0: No effect
1: LSIRDYF cleared

6.4.9 AHB1 peripheral reset register (RCC_AHB1RSTR)

Address offset: 0x28

Reset value: 0x00000 0000

Access: no wait state, word, half-word and byte access

31	30	29	28	27	26	25	24	23	22	21	20	19	18	17	16
Res.	Res.	Res.	Res.	Res.	Res.	Res.	Res.	Res.	Res.	Res.	Res.	Res.	Res.	Res.	TSC RST
															rw
15	14	13	12	11	10	9	8	7	6	5	4	3	2	1	0
Res.	Res.	Res.	CRC RST	Res.	Res.	Res.	FLASH RST	Res.	Res.	Res.	Res.	Res.	Res.	DMA2 RST	DMA1 RST
			rw				rw							rw	rw

Bits 31:17 Reserved, must be kept at reset value.

Bit 16 **TSCRST:** Touch Sensing Controller reset
Set and cleared by software.
0: No effect
1: Reset TSC

Bits 15:13 Reserved, must be kept at reset value.

Bit 12 **CRCRST:** CRC reset
Set and cleared by software.
0: No effect
1: Reset CRC

Bits 11:9 Reserved, must be kept at reset value.

Bit 8 **FLASHRST:** Flash memory interface reset
Set and cleared by software. This bit can be activated only when the Flash memory is in power down mode.
0: No effect
1: Reset Flash memory interface

Bits 7:2 Reserved, must be kept at reset value.

Bit 1 **DMA2RST:** DMA2 reset
Set and cleared by software.
0: No effect
1: Reset DMA2

Bit 0 **DMA1RST:** DMA1 reset
Set and cleared by software.
0: No effect
1: Reset DMA1

6.4.10 AHB2 peripheral reset register (RCC_AHB2RSTR)

Address offset: 0x2C

Reset value: 0x00000 0000

Access: no wait state, word, half-word and byte access

31	30	29	28	27	26	25	24	23	22	21	20	19	18	17	16
Res.	Res.	Res.	Res.	Res.	Res.	Res.	Res.	Res.	Res.	Res.	Res.	Res.	RNG RST	Res.	AES RST(1)
													rw		rw

15	14	13	12	11	10	9	8	7	6	5	4	3	2	1	0
Res.	Res.	ADC RST	Res.	Res.	Res.	Res.	Res.	GPIOH RST	Res.	Res.	GPIOE RST	GPIOD RST	GPIOC RST	GPIOB RST	GPIOA RST
		rw	rw					rw			rw	rw	rw	rw	rw

1. Not available for STM32L431xx and STM32L433xx devices.

Bits 31:19 Reserved, must be kept at reset value.

Bit 18 **RNGRST:** Random number generator reset
Set and cleared by software.
0: No effect
1: Reset RNG

Bit 17 Reserved, must be kept at reset value.

Bit 16 **AESRST**(1)**:** AES hardware accelerator reset
Set and cleared by software.
0: No effect
1: Reset AES

Bits 15:14 Reserved, must be kept at reset value.

Bit 13 **ADCRST:** ADC reset
Set and cleared by software.
0: No effect
1: Reset ADC interface

Bits 12:8 Reserved, must be kept at reset value.

Bit 7 **GPIOHRST:** IO port H reset
Set and cleared by software.
0: No effect
1: Reset IO port H

Bits 6:5 Reserved, must be kept at reset value.

Bit 4 **GPIOERST:** IO port E reset
Set and cleared by software.
0: No effect
1: Reset IO port E

Bit 3 **GPIODRST:** IO port D reset
Set and cleared by software.
0: No effect
1: Reset IO port D

Bit 2 **GPIOCRST:** IO port C reset
Set and cleared by software.
0: No effect
1: Reset IO port C

Bit 1 **GPIOBRST:** IO port B reset
Set and cleared by software.
0: No effect
1: Reset IO port B

Bit 0 **GPIOARST:** IO port A reset
Set and cleared by software.
0: No effect
1: Reset IO port A

1. Not available for STM32L431xx and STM32L433xx devices.

6.4.11 AHB3 peripheral reset register (RCC_AHB3RSTR)

Address offset: 0x30

Reset value: 0x00000 0000

Access: no wait state, word, half-word and byte access

31	30	29	28	27	26	25	24	23	22	21	20	19	18	17	16
Res.	Res.	Res.	Res.	Res.	Res.	Res.	Res.	Res.	Res.	Res.	Res.	Res.	Res.	Res.	Res.
15	14	13	12	11	10	9	8	7	6	5	4	3	2	1	0
Res.	Res.	Res.	Res.	Res.	Res.	Res.	QSPI RST	Res.	Res.	Res.	Res.	Res.	Res.	Res.	Res.
							rw								

Bits 31:9 Reserved, must be kept at reset value.

Bit 8 **QSPIRST:** Quad SPI memory interface reset
Set and cleared by software.
0: No effect
1: Reset QUADSPI

Bits 7:0 Reserved, must be kept at reset value.

6.4.12 APB1 peripheral reset register 1 (RCC_APB1RSTR1)

Address offset: 0x38

Reset value: 0x0000 0000

Access: no wait state, word, half-word and byte access

31	30	29	28	27	26	25	24	23	22	21	20	19	18	17	16
LPTIM1 RST	OPAMP RST	DAC1 RST	PWR RST	Res.	USBFS RST(1)	CAN1 RST	CRSRS T	I2C3R ST	I2C2 RST	I2C1 RST	Res.	Res.	USART3 RST	USART2 RST	Res.
rw	rw	rw	rw		rw	rw	rw	rw	rw	rw			rw	rw	

15	14	13	12	11	10	9	8	7	6	5	4	3	2	1	0
SPI3 RST	SPI2 RST	Res.	Res.	Res.	Res.	LCD RST(1)	Res.	Res.	Res.	TIM7 RST	TIM6 RST	Res.	Res.	Res.	TIM2 RST
rw	rw					rw				rw	rw				rw

1. Not available for STM32L431xx devices.

Bit 31 **LPTIM1RST:** Low Power Timer 1 reset
Set and cleared by software.
0: No effect
1: Reset LPTIM1

Bit 30 **OPAMPRST:** OPAMP interface reset
Set and cleared by software.
0: No effect
1: Reset OPAMP interface

Bit 29 **DAC1RST:** DAC1 interface reset
Set and cleared by software.
0: No effect
1: Reset DAC1 interface

Bit 28 **PWRRST:** Power interface reset
Set and cleared by software.
0: No effect
1: Reset PWR

Bit 27 Reserved, must be kept at reset value.

Bit 26 **USBFSRST(1):** USB FS reset
Set and cleared by software.
0: No effect
1: Reset the USB FS

Bit 25 **CAN1RST:** CAN1 reset
Set and reset by software.
0: No effect
1: Resets the CAN1

Bit 24 **CRSRST:** CRS reset
Set and cleared by software.
0: No effect
1: Reset the CRS

Bit 23 **I2C3RST:** I2C3 reset
Set and reset by software.
0: No effect
1: Resets I2C3

Bit 22 **I2C2RST:** I2C2 reset
Set and cleared by software.
0: No effect
1: Reset I2C2

Bit 21 **I2C1RST:** I2C1 reset
Set and cleared by software.
0: No effect
1: Reset I2C1

Bits 20:19 Reserved, must be kept at reset value.

Bit 18 **USART3RST:** USART3 reset
Set and cleared by software.
0: No effect
1: Reset USART3

Bit 17 **USART2RST:** USART2 reset
Set and cleared by software.
0: No effect
1: Reset USART2

Bit 16 Reserved, must be kept at reset value.

Bit 15 **SPI3RST:** SPI3 reset
Set and cleared by software.
0: No effect
1: Reset SPI3

Bit 14 **SPI2RST:** SPI2 reset
Set and cleared by software.
0: No effect
1: Reset SPI2

Bits 13:10 Reserved, must be kept at reset value.

Bit 9 **LCDRST[(1)]:** LCD interface reset
Set and cleared by software.
0: No effect
1: Reset LCD

Bits 8:6 Reserved, must be kept at reset value.

Bit 5 **TIM7RST:** TIM7 timer reset
Set and cleared by software.
0: No effect
1: Reset TIM7

Bit 4 **TIM6RST:** TIM6 timer reset
Set and cleared by software.
0: No effect
1: Reset TIM6

Bits 3:1 Reserved, must be kept at reset value.

Bit 0 **TIM2RST:** TIM2 timer reset
Set and cleared by software.
0: No effect
1: Reset TIM2

1. Not available for STM32L431xx devices.

6.4.13 APB1 peripheral reset register 2 (RCC_APB1RSTR2)

Address offset: 0x3C

Reset value: 0x00000 0000

Access: no wait state, word, half-word and byte access

31	30	29	28	27	26	25	24	23	22	21	20	19	18	17	16
Res.	Res.	Res.	Res.	Res.	Res.	Res.	Res.	Res.	Res.	Res.	Res.	Res.	Res.	Res.	Res.

15	14	13	12	11	10	9	8	7	6	5	4	3	2	1	0
Res.	Res.	Res.	Res.	Res.	Res.	Res.	Res.	Res.	Res.	LPTIM2 RST	Res.	Res.	SWP MI1 RST	Res.	LP UART1 RST
										rw			rw		rw

Bits 31:6 Reserved, must be kept at reset value.

Bit 5 **LPTIM2RST:** Low-power timer 2 reset
Set and cleared by software.
0: No effect
1: Reset LPTIM2

Bits 4:3 Reserved, must be kept at reset value.

Bit 2 **SWPMI1RST:** Single wire protocol reset
Set and cleared by software.
0: No effect
1: Reset SWPMI1

Bit 1 Reserved, must be kept at reset value.

Bit 0 **LPUART1RST:** Low-power UART 1 reset
Set and cleared by software.
0: No effect
1: Reset LPUART1

6.4.14 APB2 peripheral reset register (RCC_APB2RSTR)

Address offset: 0x40

Reset value: 0x00000 0000

Access: no wait state, word, half-word and byte access

31	30	29	28	27	26	25	24	23	22	21	20	19	18	17	16
Res.	Res.	Res.	Res.	Res.	Res.	Res.	Res.	Res.	Res.	SAI1 RST	Res.	Res.	Res.	TIM16 RST	TIM15 RST
										rw				rw	rw

15	14	13	12	11	10	9	8	7	6	5	4	3	2	1	0
Res.	USART 1 RST	Res.	SPI1 RST	TIM1 RST	SD MMC1 RST	Res.	Res.	Res.	Res.	Res.	Res.	Res.	Res.	Res.	SYS CFG RST
	rw		rw	rw	rw										rw

Bits 31:24 Reserved, must be kept at reset value.

Bits :22 Reserved, must be kept at reset value.

Bit 21 **SAI1RST:** Serial audio interface 1 (SAI1) reset
Set and cleared by software.
0: No effect
1: Reset SAI1

Bits 20:18 Reserved, must be kept at reset value.

Bit 17 **TIM16RST:** TIM16 timer reset
Set and cleared by software.
0: No effect
1: Reset TIM16 timer

Bit 16 **TIM15RST:** TIM15 timer reset
Set and cleared by software.
0: No effect
1: Reset TIM15 timer

Bit 15 Reserved, must be kept at reset value.

Bit 14 **USART1RST:** USART1 reset
Set and cleared by software.
0: No effect
1: Reset USART1

Bit 13 Reserved, must be kept at reset value.

Bit 12 **SPI1RST:** SPI1 reset
Set and cleared by software.
0: No effect
1: Reset SPI1

Bit 11 **TIM1RST:** TIM1 timer reset
Set and cleared by software.
0: No effect
1: Reset TIM1 timer

Bit 10 **SDMMC1RST:** SDMMC reset
Set and cleared by software.
0: No effect
1: Reset SDMMC

Bits 9:1 Reserved, must be kept at reset value.

Bit 0 **SYSCFGRST:** SYSCFG + COMP + VREFBUF reset
0: No effect
1: Reset SYSCFG + COMP + VREFBUF

6.4.15 AHB1 peripheral clock enable register (RCC_AHB1ENR)

Address offset: 0x48

Reset value: 0x0000 0100

Access: no wait state, word, half-word and byte access

Note: When the peripheral clock is not active, the peripheral registers read or write access is not supported.

31	30	29	28	27	26	25	24	23	22	21	20	19	18	17	16
Res.	Res.	Res.	Res.	Res.	Res.	Res.	Res.	Res.	Res.	Res.	Res.	Res.	Res.	Res.	TSC EN
															rw

15	14	13	12	11	10	9	8	7	6	5	4	3	2	1	0
Res.	Res.	Res.	CRCEN	Res.	Res.	Res.	FLASH EN	Res.	Res.	Res.	Res.	Res.	Res.	DMA2 EN	DMA1 EN
			rw				rw							rw	rw

Bits 31:17 Reserved, must be kept at reset value.

Bit 16 **TSCEN:** Touch Sensing Controller clock enable
Set and cleared by software.
0: TSC clock disable
1: TSC clock enable

Bits 15:13 Reserved, must be kept at reset value.

Bit 12 **CRCEN:** CRC clock enable
Set and cleared by software.
0: CRC clock disable
1: CRC clock enable

Bits 11:9 Reserved, must be kept at reset value.

Bit 8 **FLASHEN:** Flash memory interface clock enable
Set and cleared by software. This bit can be disabled only when the Flash is in power down mode.
0: Flash memory interface clock disable
1: Flash memory interface clock enable

Bits 7:2 Reserved, must be kept at reset value.

Bit 1 **DMA2EN:** DMA2 clock enable
Set and cleared by software.
0: DMA2 clock disable
1: DMA2 clock enable

Bit 0 **DMA1EN:** DMA1 clock enable
Set and cleared by software.
0: DMA1 clock disable
1: DMA1 clock enable

6.4.16 AHB2 peripheral clock enable register (RCC_AHB2ENR)

Address offset: 0x4C

Reset value: 0x0000 0000

Access: no wait state, word, half-word and byte access

Note: When the peripheral clock is not active, the peripheral registers read or write access is not supported.

31	30	29	28	27	26	25	24	23	22	21	20	19	18	17	16
Res.	Res.	Res.	Res.	Res.	Res.	Res.	Res.	Res.	Res.	Res.	Res.	Res.	RNG EN	Res.	AESEN (1)
													rw		rw

15	14	13	12	11	10	9	8	7	6	5	4	3	2	1	0
Res.	Res.	ADCEN	Res.	Res.	Res.	Res.	Res.	GPIOH EN	Res.	Res.	GPIOE EN	GPIOD EN	GPIOC EN	GPIOB EN	GPIOA EN
		rw						rw			rw	rw	rw	rw	rw

1. Not available for STM32L431xx and STM32L433xx devices.

Bits 31:19 Reserved, must be kept at reset value.

Bit 18 **RNGEN:** Random Number Generator clock enable
Set and cleared by software.
0: Random Number Generator clock disabled
1: Random Number Generator clock enabled

Bit 17 Reserved, must be kept at reset value.

Bit 16 **AESEN**(1)**:** AES accelerator clock enable
Set and cleared by software.
0: AES clock disabled
1: AES clock enabled

Bits 15:14 Reserved, must be kept at reset value.

Bit 13 **ADCEN:** ADC clock enable
Set and cleared by software.
0: ADC clock disabled
1: ADC clock enabled

Bits 12:8 Reserved, must be kept at reset value.

Bit 7 **GPIOHEN:** IO port H clock enable
Set and cleared by software.
0: IO port H clock disabled
1: IO port H clock enabled

Bits 6:5 Reserved, must be kept at reset value.

Bit 4 **GPIOEEN:** IO port E clock enable
Set and cleared by software.
0: IO port E clock disabled
1: IO port E clock enabled

Bit 3 **GPIODEN:** IO port D clock enable
Set and cleared by software.
0: IO port D clock disabled
1: IO port D clock enabled

Bit 2 **GPIOCEN:** IO port C clock enable
Set and cleared by software.
0: IO port C clock disabled
1: IO port C clock enabled

Bit 1 **GPIOBEN:** IO port B clock enable
Set and cleared by software.
0: IO port B clock disabled
1: IO port B clock enabled

Bit 0 **GPIOAEN:** IO port A clock enable
Set and cleared by software.
0: IO port A clock disabled
1: IO port A clock enabled

1. Not available for STM32L431xx and STM32L433xx devices.

6.4.17 AHB3 peripheral clock enable register(RCC_AHB3ENR)

Address offset: 0x50

Reset value: 0x00000 0000

Access: no wait state, word, half-word and byte access

Note: When the peripheral clock is not active, the peripheral registers read or write access is not supported.

31	30	29	28	27	26	25	24	23	22	21	20	19	18	17	16
Res.	Res.	Res.	Res.	Res.	Res.	Res.	Res.	Res.	Res.	Res.	Res.	Res.	Res.	Res.	Res.
15	14	13	12	11	10	9	8	7	6	5	4	3	2	1	0
Res.	Res.	Res.	Res.	Res.	Res.	Res.	QSPI EN	Res.	Res.	Res.	Res.	Res.	Res.	Res.	Res.
							rw								

Bits 31:9 Reserved, must be kept at reset value.

Bit 8 **QSPIEN** Quad SPI memory interface clock enable
Set and cleared by software.
0: QUADSPI clock disable
1: QUADSPI clock enable

Bits 7:0 Reserved, must be kept at reset value.

6.4.18 APB1 peripheral clock enable register 1 (RCC_APB1ENR1)

Address: 0x58

Reset value: 0x0000 0400

Access: no wait state, word, half-word and byte access

Note: When the peripheral clock is not active, the peripheral registers read or write access is not supported.

31	30	29	28	27	26	25	24	23	22	21	20	19	18	17	16
LPTIM1 EN	OPAMP EN	DAC1 EN	PWR EN	Res.	USBF SEN(1)	CAN1 EN	CRSEN	I2C3 EN	I2C2 EN	I2C1 EN	Res.	Res.	USART3 EN	USART2 EN	Res.
rw	rw	rw	rw		rw	rw	rw	rw	rw	rw			rw	rw	

15	14	13	12	11	10	9	8	7	6	5	4	3	2	1	0
SPI3 EN	SPI2 EN	Res.	Res.	WWD GEN	RTCA PBEN	LCD EN(1)	Res.	Res.	Res.	TIM7 EN	TIM6EN	Res.	Res.	Res.	TIM2 EN
rw	rw			rs	rw	rw				rw	rw				rw

1. Not available for STM32L431xx devices.

Bit 31 **LPTIM1EN:** Low power timer 1 clock enable
Set and cleared by software.
0: LPTIM1 clock disabled
1: LPTIM1 clock enabled

Bit 30 **OPAMPEN:** OPAMP interface clock enable
Set and cleared by software.
0: OPAMP interface clock disabled
1: OPAMP interface clock enabled

Bit 29 **DAC1EN:** DAC1 interface clock enable
Set and cleared by software.
0: DAC1 interface clock disabled
1: DAC1 interface clock enabled

Bit 28 **PWREN:** Power interface clock enable
Set and cleared by software.
0: Power interface clock disabled
1: Power interface clock enabled

Bit 27 Reserved, must be kept at reset value.

Bit 26 **USBFSEN(1):** USB FS clock enable
Set and cleared by software.
0: USB FS clock disabled
1: USB FS clock enabled

Bit 25 **CAN1EN:** CAN1 clock enable
Set and cleared by software.
0: CAN1 clock disabled
1: CAN1 clock enabled

Bit 24 **CRSEN:** CRS clock enable
Set and cleared by software.
0: CRS clock disabled
1: CRS clock enabled

Bit 23 **I2C3EN:** I2C3 clock enable
Set and cleared by software.
0: I2C3 clock disabled
1: I2C3 clock enabled

Bit 22 **I2C2EN:** I2C2 clock enable
Set and cleared by software.
0: I2C2 clock disabled
1: I2C2 clock enabled

Bit 21 **I2C1EN:** I2C1 clock enable
Set and cleared by software.
0: I2C1 clock disabled
1: I2C1 clock enabled

Bits 20:19 Reserved, must be kept at reset value.

Bit 18 **USART3EN:** USART3 clock enable
Set and cleared by software.
0: USART3 clock disabled
1: USART3 clock enabled

Bit 17 **USART2EN:** USART2 clock enable
Set and cleared by software.
0: USART2 clock disabled
1: USART2 clock enabled

Bit 16 Reserved, must be kept at reset value.

Bit 15 **SPI3EN:** SPI3 clock enable
Set and cleared by software.
0: SPI3 clock disabled
1: SPI3 clock enabled

Bit 14 **SPI2EN:** SPI2 clock enable
Set and cleared by software.
0: SPI2 clock disabled
1: SPI2 clock enabled

Bits 13:12 Reserved, must be kept at reset value.

Bit 11 **WWDGEN:** Window watchdog clock enable
Set by software to enable the window watchdog clock. Reset by hardware system reset. This bit can also be set by hardware if the WWDG_SW option bit is reset.
0: Window watchdog clock disabled
1: Window watchdog clock enabled

Bit 10 **RTCAPBEN:** RTC APB clock enable
Set and cleared by software
0: RTC APB clock disabled
1: RTC APB clock enabled

Bit 9 **LCDEN(1):** LCD clock enable
Set and cleared by software.
0: LCD clock disabled
1: LCD clock enabled

Bits 8:6 Reserved, must be kept at reset value.

Bit 5 **TIM7EN:** TIM7 timer clock enable
Set and cleared by software.
0: TIM7 clock disabled
1: TIM7 clock enabled

Bit 4 **TIM6EN:** TIM6 timer clock enable
Set and cleared by software.
0: TIM6 clock disabled
1: TIM6 clock enabled

Bits 3:1 Reserved, must be kept at reset value.

Bit 0 **TIM2EN:** TIM2 timer clock enable
Set and cleared by software.
0: TIM2 clock disabled
1: TIM2 clock enabled

1. Not available for STM32L431xx devices.

6.4.19 APB1 peripheral clock enable register 2 (RCC_APB1ENR2)

Address offset: 0x5C

Reset value: 0x00000 0000

Access: no wait state, word, half-word and byte access

Note: When the peripheral clock is not active, the peripheral registers read or write access is not supported.

31	30	29	28	27	26	25	24	23	22	21	20	19	18	17	16
Res.	Res.	Res.	Res.	Res.	Res.	Res.	Res.	Res.	Res.	Res.	Res.	Res.	Res.	Res.	Res.

15	14	13	12	11	10	9	8	7	6	5	4	3	2	1	0
Res.	Res.	Res.	Res.	Res.	Res.	Res.	Res.	Res.	Res.	LPTIM2 EN	Res.	Res.	SWP MI1 EN	Res.	LP UART1 EN
													rw		rw

Bits 31:6 Reserved, must be kept at reset value.

Bit 5 **LPTIM2EN** Low power timer 2 clock enable
Set and cleared by software.
0: LPTIM2 clock disable
1: LPTIM2 clock enable

Bits 4:3 Reserved, must be kept at reset value.

Bit 2 **SWPMI1EN:** Single wire protocol clock enable
Set and cleared by software.
0: SWPMI1 clock disable
1: SWPMI1 clock enable

Bit 1 Reserved, must be kept at reset value.

Bit 0 **LPUART1EN:** Low power UART 1 clock enable
Set and cleared by software.
0: LPUART1 clock disable
1: LPUART1 clock enable

6.4.20 APB2 peripheral clock enable register (RCC_APB2ENR)

Address: 0x60

Reset value: 0x0000 0000

Access: word, half-word and byte access

Note: When the peripheral clock is not active, the peripheral registers read or write access is not supported.

31	30	29	28	27	26	25	24	23	22	21	20	19	18	17	16
Res.	Res.	Res.	Res.	Res.	Res.	Res.	Res.	Res.	Res.	SAI1 EN	Res.	Res.	Res.	TIM16 EN	TIM15 EN
										rw				rw	rw

15	14	13	12	11	10	9	8	7	6	5	4	3	2	1	0
Res.	USART 1 EN	Res.	SPI1 EN	TIM1 EN	SD MMC1 EN	Res.	Res.	FW EN	Res.	Res.	Res.	Res.	Res.	Res.	SYS CFGEN
	rw		rw	rw	rw			rs							rw

Bits 31:22 Reserved, must be kept at reset value.

Bit 21 **SAI1EN:** SAI1 clock enable
Set and cleared by software.
0: SAI1 clock disabled
1: SAI1 clock enabled

Bits 20:18 Reserved, must be kept at reset value.

Bit 17 **TIM16EN:** TIM16 timer clock enable
Set and cleared by software.
0: TIM16 timer clock disabled
1: TIM16 timer clock enabled

Bit 16 **TIM15EN:** TIM15 timer clock enable
Set and cleared by software.
0: TIM15 timer clock disabled
1: TIM15 timer clock enabled

Bit 15 Reserved, must be kept at reset value.

Bit 14 **USART1EN:** USART1clock enable
Set and cleared by software.
0: USART1clock disabled
1: USART1clock enabled

Bit 13 Reserved, must be kept at reset value.

Bit 12 **SPI1EN:** SPI1 clock enable
Set and cleared by software.
0: SPI1 clock disabled
1: SPI1 clock enabled

Bit 11 **TIM1EN:** TIM1 timer clock enable
Set and cleared by software.
0: TIM1 timer clock disabled
1: TIM1P timer clock enabled

Bit 10 **SDMMC1EN:** SDMMC clock enable
Set and cleared by software.
0: SDMMC clock disabled
1: SDMMC clock enabled

Bits 9:8 Reserved, must be kept at reset value.

Bit 7 **FWEN:** Firewall clock enable
Set by software, reset by hardware. Software can only write 1. A write at 0 has no effect.
0: Firewall clock disabled
1: Firewall clock enabled

Bits 6:1 Reserved, must be kept at reset value.

Bit 0 **SYSCFGEN:** SYSCFG + COMP + VREFBUF clock enable
Set and cleared by software.
0: SYSCFG + COMP + VREFBUF clock disabled
1: SYSCFG + COMP + VREFBUF clock enabled

6.4.21 AHB1 peripheral clocks enable in Sleep and Stop modes register (RCC_AHB1SMENR)

Address offset: 0x68

Reset value: 0x0001 1303

Access: no wait state, word, half-word and byte access

31	30	29	28	27	26	25	24	23	22	21	20	19	18	17	16
Res.	Res.	Res.	Res.	Res.	Res.	Res.	Res.	Res.	Res.	Res.	Res.	Res.	Res.	Res.	TSC SMEN
															rw
15	14	13	12	11	10	9	8	7	6	5	4	3	2	1	0
Res.	Res.	Res.	CRCSMEN	Res.	Res.	SRAM1 SMEN	FLASH SMEN	Res.	Res.	Res.	Res.	Res.	Res.	DMA2 SMEN	DMA1 SMEN
			rw			rw	rw							rw	rw

Bits 31:17 Reserved, must be kept at reset value.

Bit 16 **TSCSMEN:** Touch Sensing Controller clocks enable during Sleep and Stop modes
Set and cleared by software.
0: TSC clocks disabled by the clock gating(1) during Sleep and Stop modes
1: TSC clocks enabled by the clock gating(1) during Sleep and Stop modes

Bits 15:13 Reserved, must be kept at reset value.

Bit 12 **CRCSMEN:** CRC clocks enable during Sleep and Stop modes
Set and cleared by software.
0: CRC clocks disabled by the clock gating(1) during Sleep and Stop modes
1: CRC clocks enabled by the clock gating(1) during Sleep and Stop modes

Bits 11:10 Reserved, must be kept at reset value.

Bit 9 **SRAM1SMEN:** SRAM1 interface clocks enable during Sleep and Stop modes
Set and cleared by software.
0: SRAM1 interface clocks disabled by the clock gating(1) during Sleep and Stop modes
1: SRAM1 interface clocks enabled by the clock gating(1) during Sleep and Stop modes

Bit 8 **FLASHSMEN:** Flash memory interface clocks enable during Sleep and Stop modes
Set and cleared by software.
0: Flash memory interface clocks disabled by the clock gating(1) during Sleep and Stop modes
1: Flash memory interface clocks enabled by the clock gating(1) during Sleep and Stop modes

Bits 7:2 Reserved, must be kept at reset value.

Bit 1 **DMA2SMEN:** DMA2 clocks enable during Sleep and Stop modes
Set and cleared by software during Sleep mode.
0: DMA2 clocks disabled by the clock gating(1) during Sleep and Stop modes
1: DMA2 clocks enabled by the clock gating(1) during Sleep and Stop modes

Bit 0 **DMA1SMEN:** DMA1 clocks enable during Sleep and Stop modes
Set and cleared by software.
0: DMA1 clocks disabled by the clock gating(1) during Sleep and Stop modes
1: DMA1 clocks enabled by the clock gating(1) during Sleep and Stop modes

1. This register only configures the clock gating, not the clock source itself. Most of the peripherals are clocked by a single clock (AHB or APB clock), which is always disabled in Stop mode. In this case setting the bit has no effect in Stop mode.

6.4.22 AHB2 peripheral clocks enable in Sleep and Stop modes register (RCC_AHB2SMENR)

Address offset: 0x6C

Reset value: 0x0005229F

Access: no wait state, word, half-word and byte access

31	30	29	28	27	26	25	24	23	22	21	20	19	18	17	16
Res.	Res.	Res.	Res.	Res.	Res.	Res.	Res.	Res.	Res.	Res.	Res.	Res.	RNG SMEN	Res.	AES SMEN (1)
													rw		rw
15	14	13	12	11	10	9	8	7	6	5	4	3	2	1	0
Res.	Res.	ADC SMEN	Res.	Res.	Res.	SRAM2 SMEN	Res.	GPIOH SMEN	Res.	Res.	GPIOE SMEN	GPIOD SMEN	GPIOC SMEN	GPIOB SMEN	GPIOA SMEN
		rw				rw		rw			rw	rw	rw	rw	rw

1. Not available for STM32L431xx and STM32L433xx devices.

Bits 31:19 Reserved, must be kept at reset value.

Bit 18 **RNGSMEN:** Random Number Generator clocks enable during Sleep and Stop modes
Set and cleared by software.
0: Random Number Generator clocks disabled by the clock gating(1) during Sleep and Stop modes
1: Random Number Generator clocks enabled by the clock gating(1) during Sleep and Stop modes

Bit 17 Reserved, must be kept at reset value.

Bit 16 **AESSMEN(2):** AES accelerator clocks enable during Sleep and Stop modes
Set and cleared by software.
0: AES clocks disabled by the clock gating(1) during Sleep and Stop modes
1: AES clocks enabled by the clock gating(1) during Sleep and Stop modes

Bits 15:14 Reserved, must be kept at reset value.

Bit 13 **ADCSMEN:** ADC clocks enable during Sleep and Stop modes
Set and cleared by software.
0: ADC clocks disabled by the clock gating(1) during Sleep and Stop modes
1: ADC clocks enabled by the clock gating(1) during Sleep and Stop modes

Bits 12:10 Reserved, must be kept at reset value.

Bit 9 **SRAM2SMEN:** SRAM2 interface clocks enable during Sleep and Stop modes
Set and cleared by software.
0: SRAM2 interface clocks disabled by the clock gating(1) during Sleep and Stop modes
1: SRAM2 interface clocks enabled by the clock gating(1) during Sleep and Stop modes

Bit 8 Reserved, must be kept at reset value.

Bit 7 **GPIOHSMEN:** IO port H clocks enable during Sleep and Stop modes
Set and cleared by software.
0: IO port H clocks disabled by the clock gating(1) during Sleep and Stop modes
1: IO port H clocks enabled by the clock gating(1) during Sleep and Stop modes

Bits 6:5 Reserved, must be kept at reset value.

Bit 4 **GPIOESMEN:** IO port E clocks enable during Sleep and Stop modes
Set and cleared by software.
0: IO port E clocks disabled by the clock gating(1) during Sleep and Stop modes
1: IO port E clocks enabled by the clock gating(1) during Sleep and Stop modes

Bit 3 **GPIODSMEN:** IO port D clocks enable during Sleep and Stop modes
Set and cleared by software.
0: IO port D clocks disabled by the clock gating(1) during Sleep and Stop modes
1: IO port D clocks enabled by the clock gating(1) during Sleep and Stop modes

Bit 2 **GPIOCSMEN:** IO port C clocks enable during Sleep and Stop modes
Set and cleared by software.
0: IO port C clocks disabled by the clock gating(1) during Sleep and Stop modes
1: IO port C clocks enabled by the clock gating(1) during Sleep and Stop modes

Bit 1 **GPIOBSMEN:** IO port B clocks enable during Sleep and Stop modes
Set and cleared by software.
0: IO port B clocks disabled by the clock gating(1) during Sleep and Stop modes
1: IO port B clocks enabled by the clock gating(1) during Sleep and Stop modes

Bit 0 **GPIOASMEN:** IO port A clocks enable during Sleep and Stop modes
Set and cleared by software.
0: IO port A clocks disabled by the clock gating(1) during Sleep and Stop modes
1: IO port A clocks enabled by the clock gating(1) during Sleep and Stop modes

1. This register only configures the clock gating, not the clock source itself. Most of the peripherals are clocked by a single clock (AHB or APB clock), which is always disabled in Stop mode. In this case setting the bit has no effect in Stop mode.
2. Not available for STM32L431xx and STM32L433xx devices.

6.4.23 AHB3 peripheral clocks enable in Sleep and Stop modes register (RCC_AHB3SMENR)

Address offset: 0x70

Reset value: 0x00000 0100

Access: no wait state, word, half-word and byte access

31	30	29	28	27	26	25	24	23	22	21	20	19	18	17	16
Res.	Res.	Res.	Res.	Res.	Res.	Res.	Res.	Res.	Res.	Res.	Res.	Res.	Res.	Res.	Res.

15	14	13	12	11	10	9	8	7	6	5	4	3	2	1	0
Res.	Res.	Res.	Res.	Res.	Res.	Res.	QSPI SMEN	Res.	Res.	Res.	Res.	Res.	Res.	Res.	Res.
							rw								

Bits 31:9 Reserved, must be kept at reset value.

Bit 8 **QSPISMEN** Quad SPI memory interface clocks enable during Sleep and Stop modes
Set and cleared by software.
0: QUADSPI clocks disabled by the clock gating(1) during Sleep and Stop modes
1: QUADSPI clocks enabled by the clock gating(1) during Sleep and Stop modes

Bits 7:0 Reserved, must be kept at reset value.

1. This register only configures the clock gating, not the clock source itself. Most of the peripherals are clocked by a single clock (AHB or APB clock), which is always disabled in Stop mode. In this case setting the bit has no effect in Stop mode.

6.4.24 APB1 peripheral clocks enable in Sleep and Stop modes register 1 (RCC_APB1SMENR1)

Address: 0x78

Reset value: 0xF7E6 CE31

Access: no wait state, word, half-word and byte access

31	30	29	28	27	26	25	24	23	22	21	20	19	18	17	16
LPTIM1 SMEN	OPAMP SMEN	DAC1 SMEN	PWR SMEN	Res.	USBF SSME N(1)	CAN1 SMEN	CRSS MEN	I2C3 SMEN	I2C2 SMEN	I2C1 SMEN	Res.	Res.	USART3 SMEN	USART2 SMEN	Res.
rw	rw	rw	rw		rw	rw	rw	rw	rw	rw	rw	rw	rw	rw	

15	14	13	12	11	10	9	8	7	6	5	4	3	2	1	0
SPI3 SMEN	SPI2 SMEN	Res.	Res.	WWDG SMEN	RTCA PBSM EN	LCD SMEN (1)	Res.	Res.	Res.	TIM7 SMEN	TIM6 SMEN	Res.	Res.	Res.	TIM2 SMEN
rw	rw			rw	rw	rw				rw	rw				rw

1. Not available for STM32L431xx devices.

Bit 31 **LPTIM1SMEN:** Low power timer 1 clocks enable during Sleep and Stop modes
Set and cleared by software.
0: LPTIM1 clocks disabled by the clock gating(1) during Sleep and Stop modes
1: LPTIM1 clocks enabled by the clock gating(1) during Sleep and Stop modes

Bit 30 **OPAMPSMEN:** OPAMP interface clocks enable during Sleep and Stop modes
Set and cleared by software.
0: OPAMP interface clocks disabled by the clock gating(1) during Sleep and Stop modes
1: OPAMP interface clocks enabled by the clock gating(1) during Sleep and Stop modes

Bit 29 **DAC1SMEN:** DAC1 interface clocks enable during Sleep and Stop modes
Set and cleared by software.
0: DAC1 interface clocks disabled by the clock gating(1) during Sleep and Stop modes
1: DAC1 interface clocks enabled by the clock gating(1) during Sleep and Stop modes

Bit 28 **PWRSMEN:** Power interface clocks enable during Sleep and Stop modes
Set and cleared by software.
0: Power interface clocks disabled by the clock gating(1) during Sleep and Stop modes
1: Power interface clocks enabled by the clock gating(1) during Sleep and Stop modes

Bit 27 Reserved, must be kept at reset value.

Bit 26 **USBFSSMEN(2):** USB FS clock enable during Sleep and Stop modes
Set and cleared by software.
0: USB FS clock disabled by the clock gating(1) during Sleep and Stop modes
1: USB FS clock enabled by the clock gating(1) during Sleep and Stop modes

Bit 25 **CAN1SMEN:** CAN1 clocks enable during Sleep and Stop modes
Set and cleared by software.
0: CAN1 clocks disabled by the clock gating(1) during Sleep and Stop modes
1: CAN1 clocks enabled by the clock gating(1) during Sleep and Stop modes

Bit 24 **CRSSMEN:** CRS clock enable during Sleep and Stop modes
Set and cleared by software.
0: CRS clocks disabled by the clock gating(1) during Sleep and Stop modes
1: CRS clocks enabled by the clock gating(1) during Sleep and Stop modes

Bit 23 **I2C3SMEN:** I2C3 clocks enable during Sleep and Stop modes
Set and cleared by software.
0: I2C3 clocks disabled by the clock gating(1) during Sleep and Stop modes
1: I2C3 clocks enabled by the clock gating(1) during Sleep and Stop modes

Bit 22 **I2C2SMEN:** I2C2 clocks enable during Sleep and Stop modes
Set and cleared by software.
0: I2C2 clocks disabled by the clock gating(1) during Sleep and Stop modes
1: I2C2 clocks enabled by the clock gating(1) during Sleep and Stop modes

Bit 21 **I2C1SMEN:** I2C1 clocks enable during Sleep and Stop modes
Set and cleared by software.
0: I2C1 clocks disabled by the clock gating(1) during Sleep and Stop modes
1: I2C1 clocks enabled by the clock gating(1) during Sleep and Stop modes

Bits 20:19 Reserved, must be kept at reset value.

Bit 18 **USART3SMEN:** USART3 clocks enable during Sleep and Stop modes
Set and cleared by software.
0: USART3 clocks disabled by the clock gating(1) during Sleep and Stop modes
1: USART3 clocks enabled by the clock gating(1) during Sleep and Stop modes

Bit 17 **USART2SMEN:** USART2 clocks enable during Sleep and Stop modes
Set and cleared by software.
0: USART2 clocks disabled by the clock gating(1) during Sleep and Stop modes
1: USART2 clocks enabled by the clock gating(1) during Sleep and Stop modes

Bit 16 Reserved, must be kept at reset value.

Bit 15 **SPI3SMEN:** SPI3 clocks enable during Sleep and Stop modes
Set and cleared by software.
0: SPI3 clocks disabled by the clock gating(1) during Sleep and Stop modes
1: SPI3 clocks enabled by the clock gating(1) during Sleep and Stop modes

Bit 14 **SPI2SMEN:** SPI2 clocks enable during Sleep and Stop modes
Set and cleared by software.
0: SPI2 clocks disabled by the clock gating(1) during Sleep and Stop modes
1: SPI2 clocks enabled by the clock gating(1) during Sleep and Stop modes

Bits 13:12 Reserved, must be kept at reset value.

Bit 11 **WWDGSMEN:** Window watchdog clocks enable during Sleep and Stop modes
Set and cleared by software. This bit is forced to '1' by hardware when the hardware WWDG option is activated.
0: Window watchdog clocks disabled by the clock gating(1) during Sleep and Stop modes
1: Window watchdog clocks enabled by the clock gating(1) during Sleep and Stop modes

Bit 10 **RTCAPBSMEN:** RTC APB clock enable during Sleep and Stop modes
Set and cleared by software
0: RTC APB clock disabled during by the clock gating(1) during Sleep and Stop modes
1: RTC APB clock enabled during by the clock gating(1) during Sleep and Stop modes

Bit 9 **LCDSMEN(2):** LCD clocks enable during Sleep and Stop modes
Set and cleared by software.
0: LCD clocks disabled by the clock gating(1) during Sleep and Stop modes
1: LCD clocks enabled by the clock gating(1) during Sleep and Stop modes

Bits 8:6 Reserved, must be kept at reset value.

Bit 5 **TIM7SMEN:** TIM7 timer clocks enable during Sleep and Stop modes
Set and cleared by software.
0: TIM7 clocks disabled by the clock gating(1) during Sleep and Stop modes
1: TIM7 clocks enabled by the clock gating(1) during Sleep and Stop modes

Bit 4 **TIM6SMEN:** TIM6 timer clocks enable during Sleep and Stop modes
Set and cleared by software.
0: TIM6 clocks disabled by the clock gating(1) during Sleep and Stop modes
1: TIM6 clocks enabled by the clock gating(1) during Sleep and Stop modes

Bits 3:1 Reserved, must be kept at reset value.

Bit 0 **TIM2SMEN:** TIM2 timer clocks enable during Sleep and Stop modes
Set and cleared by software.
0: TIM2 clocks disabled by the clock gating(1) during Sleep and Stop modes
1: TIM2 clocks enabled by the clock gating(1) during Sleep and Stop modes

1. This register only configures the clock gating, not the clock source itself. Most of the peripherals are clocked by a single clock (AHB or APB clock), which is always disabled in Stop mode. In this case setting the bit has no effect in Stop mode.
2. Not available for STM32L431xx devices.

6.4.25 APB1 peripheral clocks enable in Sleep and Stop modes register 2 (RCC_APB1SMENR2)

Address offset: 0x7C

Reset value: 0x0000 0025

Access: no wait state, word, half-word and byte access

31	30	29	28	27	26	25	24	23	22	21	20	19	18	17	16
Res.	Res.	Res.	Res.	Res.	Res.	Res.	Res.	Res.	Res.	Res.	Res.	Res.	Res.	Res.	Res.

15	14	13	12	11	10	9	8	7	6	5	4	3	2	1	0
Res.	Res.	Res.	Res.	Res.	Res.	Res.	Res.	Res.	Res.	LPTIM 2SMEN	Res.	Res.	SWP MI1 SMEN	Res.	LP UART1 SMEN
										rw			rw		rw

Bits 31:6 Reserved, must be kept at reset value.

Bit 5 **LPTIM2SMEN** Low power timer 2 clocks enable during Sleep and Stop modes
Set and cleared by software.
0: LPTIM2 clocks disabled by the clock gating(1) during Sleep and Stop modes
1: LPTIM2 clocks enabled by the clock gating(1) during Sleep and Stop modes

Bits 4:3 Reserved, must be kept at reset value.

Bit 2 **SWPMI1SMEN:** Single wire protocol clocks enable during Sleep and Stop modes
Set and cleared by software.
0: SWPMI1 clocks disabled by the clock gating(1) during Sleep and Stop modes
1: SWPMI1 clocks enabled by the clock gating(1) during Sleep and Stop modes

Bit 1 Reserved, must be kept at reset value.

Bit 0 **LPUART1SMEN:** Low power UART 1 clocks enable during Sleep and Stop modes
Set and cleared by software.
0: LPUART1 clocks disabled by the clock gating(1) during Sleep and Stop modes
1: LPUART1 clocks enabled by the clock gating(1) during Sleep and Stop modes

1. This register only configures the clock gating, not the clock source itself. Most of the peripherals are clocked by a single clock (AHB or APB clock), which is always disabled in Stop mode. In this case setting the bit has no effect in Stop mode.

6.4.26 APB2 peripheral clocks enable in Sleep and Stop modes register (RCC_APB2SMENR)

Address: 0x80

Reset value: 0x0235 7C01

Access: word, half-word and byte access

31	30	29	28	27	26	25	24	23	22	21	20	19	18	17	16
Res.	Res.	Res.	Res.	Res.	Res.	Res.	Res.	Res.	Res.	SAI1 SMEN	Res.	Res.	Res.	TIM16 SMEN	TIM15 SMEN
										rw				rw	rw

15	14	13	12	11	10	9	8	7	6	5	4	3	2	1	0
Res.	USART 1 SMEN	Res.	SPI1 SMEN	TIM1 SMEN	SD MMC1 SMEN	Res.	Res.	Res.	Res.	Res.	Res.	Res.	Res.	Res.	SYS CFG SMEN
	rw		rw	rw	rw										rw

Bits 31:22 Reserved, must be kept at reset value.

Bit 21 **SAI1SMEN:** SAI1 clocks enable during Sleep and Stop modes
Set and cleared by software.
0: SAI1 clocks disabled by the clock gating(1) during Sleep and Stop modes
1: SAI1 clocks enabled by the clock gating(1) during Sleep and Stop modes

Bits 20:18 Reserved, must be kept at reset value.

Bit 17 **TIM16SMEN:** TIM16 timer clocks enable during Sleep and Stop modes
Set and cleared by software.
0: TIM16 timer clocks disabled by the clock gating(1) during Sleep and Stop modes
1: TIM16 timer clocks enabled by the clock gating(1) during Sleep and Stop modes

Bit 16 **TIM15SMEN:** TIM15 timer clocks enable during Sleep and Stop modes
Set and cleared by software.
0: TIM15 timer clocks disabled by the clock gating(1) during Sleep and Stop modes
1: TIM15 timer clocks enabled by the clock gating(1) during Sleep and Stop modes

Bit 15 Reserved, must be kept at reset value.

Bit 14 **USART1SMEN:** USART1clocks enable during Sleep and Stop modes
Set and cleared by software.
0: USART1clocks disabled by the clock gating(1) during Sleep and Stop modes
1: USART1clocks enabled by the clock gating(1) during Sleep and Stop modes

Bit 13 Reserved, must be kept at reset value.

Bit 12 **SPI1SMEN:** SPI1 clocks enable during Sleep and Stop modes
Set and cleared by software.
0: SPI1 clocks disabled by the clock gating during(1) Sleep and Stop modes
1: SPI1 clocks enabled by the clock gating during(1) Sleep and Stop modes

Bit 11 **TIM1SMEN:** TIM1 timer clocks enable during Sleep and Stop modes
Set and cleared by software.
0: TIM1 timer clocks disabled by the clock gating(1) during Sleep and Stop modes
1: TIM1P timer clocks enabled by the clock gating(1) during Sleep and Stop modes

Bit 10 **SDMMC1SMEN:** SDMMC clocks enable during Sleep and Stop modes
Set and cleared by software.
0: SDMMC clocks disabled by the clock gating(1) during Sleep and Stop modes
1: SDMMC clocks enabled by the clock gating(1) during Sleep and Stop modes

Bits 9:1 Reserved, must be kept at reset value.

Bit 0 **SYSCFGSMEN:** SYSCFG + COMP + VREFBUF clocks enable during Sleep and Stop modes
Set and cleared by software.
0: SYSCFG + COMP + VREFBUF clocks disabled by the clock gating(1) during Sleep and Stop modes
1: SYSCFG + COMP + VREFBUF clocks enabled by the clock gating(1) during Sleep and Stop modes

1. This register only configures the clock gating, not the clock source itself. Most of the peripherals are clocked by a single clock (AHB or APB clock), which is always disabled in Stop mode. In this case setting the bit has no effect in Stop mode.

6.4.27 Peripherals independent clock configuration register (RCC_CCIPR)

Address: 0x88

Reset value: 0x0000 0000

Access: no wait states, word, half-word and byte access

31	30	29	28	27	26	25	24	23	22	21	20	19	18	17	16
Res.	SWPMI1SEL	ADCSEL[1:0]		CLK48SEL[1:0]		Res.	Res.	SAI1SEL[1:0]		LPTIM2SEL[1:0]		LPTIM1SEL[1:0		I2C3SEL[1:0]	
	rw	rw	rw	rw	rw			rw	rw	rw	rw	rw	rw	rw	rw

15	14	13	12	11	10	9	8	7	6	5	4	3	2	1	0
I2C2SEL[1:0]		I2C1SEL[1:0]		LPUART1SEL [1:0]		Res.	Res.	Res.	Res.	USART3SEL [1:0]		USART2SEL [1:0]		USART1SEL [1:0]	
rw	rw	rw	rw	rw	rw					rw	rw	rw	rw	rw	rw

Bit 31 Reserved, must be kept at reset value.

Bit 30 **SWPMI1SEL:** SWPMI1 clock source selection
This bit is set and cleared by software to select the SWPMI1 clock source.
0: PCLK selected as SWPMI1 clock
1: HSI16 clock selected as SWPMI1 clock

Bits 29:28 **ADCSEL[1:0]:** ADCs clock source selection
These bits are set and cleared by software to select the clock source used by the ADC interface.
00: No clock selected
01: PLLSAI1 “R” clock (PLLADC1CLK) selected as ADCs clock
10: Reserved
11: System clock selected as ADCs clock

Bits 27:26 **CLK48SEL[1:0]:** 48 MHz clock source selection
These bits are set and cleared by software to select the 48 MHz clock source used by USB FS(1), RNG and SDMMC.
00: HSI48 clock selected as 48 MHz clock
01: PLLSAI1 “Q” clock (PLL48M2CLK) selected as 48 MHz clock
10: PLL “Q” clock (PLL48M1CLK) selected as 48 MHz clock
11: MSI clock selected as 48 MHz clock

Bits 25:24 Reserved, must be kept at reset value.

Bits 23:22 **SAI1SEL[1:0]:** SAI1 clock source selection

These bits are set and cleared by software to select the SAI1 clock source.
00: PLLSAI1 “P” clock (PLLSAI1CLK) selected as SAI1 clock
01: Reserved

Note: When there is no PLL enabled, the HSI16 clock source is connected automatically to the SAI1 to allow audio detection without the need to turn on the PLL source.

10: PLL “P” clock (PLLSAI3CLK) selected as SAI1 clock
11: External input SAI1_EXTCLK selected as SAI1 clock

Caution: If the selected clock is the external clock, it is not possible to switch to another clock if the external clock is not present.

Bits 21:20 **LPTIM2SEL[1:0]:** Low power timer 2 clock source selection

These bits are set and cleared by software to select the LPTIM2 clock source.
00: PCLK selected as LPTIM2 clock
01: LSI clock selected as LPTIM2 clock
10: HSI16 clock selected as LPTIM2 clock
11: LSE clock selected as LPTIM2 clock

Bits 19:18 **LPTIM1SEL[1:0]:** Low power timer 1 clock source selection

These bits are set and cleared by software to select the LPTIM1 clock source.
00: PCLK selected as LPTIM1 clock
01: LSI clock selected as LPTIM1 clock
10: HSI16 clock selected as LPTIM1 clock
11: LSE clock selected as LPTIM1 clock

Bits 17:16 **I2C3SEL[1:0]:** I2C3 clock source selection

These bits are set and cleared by software to select the I2C3 clock source.
00: PCLK selected as I2C3 clock
01: System clock (SYSCLK) selected as I2C3 clock
10: HSI16 clock selected as I2C3 clock
11: reserved

Bits 15:14 **I2C2SEL[1:0]:** I2C2 clock source selection

These bits are set and cleared by software to select the I2C2 clock source.
00: PCLK selected as I2C2 clock
01: System clock (SYSCLK) selected as I2C2 clock
10: HSI16 clock selected as I2C2 clock
11: reserved

Bits 13:12 **I2C1SEL[1:0]:** I2C1 clock source selection

These bits are set and cleared by software to select the I2C1 clock source.
00: PCLK selected as I2C1 clock
01: System clock (SYSCLK) selected as I2C1 clock
10: HSI16 clock selected as I2C1 clock
11: reserved

Bits 11:10 **LPUART1SEL[1:0]:** LPUART1 clock source selection

These bits are set and cleared by software to select the LPUART1 clock source.
00: PCLK selected as LPUART1 clock
01: System clock (SYSCLK) selected as LPUART1 clock
10: HSI16 clock selected as LPUART1 clock
11: LSE clock selected as LPUART1 clock

Bits 9:6 Reserved, must be kept at reset value.

Bits 5:4 **USART3SEL[1:0]:** USART3 clock source selection
This bit is set and cleared by software to select the USART3 clock source.
00: PCLK selected as USART3 clock
01: System clock (SYSCLK) selected as USART3 clock
10: HSI16 clock selected as USART3 clock
11: LSE clock selected as USART3 clock

Bits 3:2 **USART2SEL[1:0]:** USART2 clock source selection
This bit is set and cleared by software to select the USART2 clock source.
00: PCLK selected as USART2 clock
01: System clock (SYSCLK) selected as USART2 clock
10: HSI16 clock selected as USART2 clock
11: LSE clock selected as USART2 clock

Bits 1:0 **USART1SEL[1:0]:** USART1 clock source selection
This bit is set and cleared by software to select the USART1 clock source.
00: PCLK selected as USART1 clock
01: System clock (SYSCLK) selected as USART1 clock
10: HSI16 clock selected as USART1 clock
11: LSE clock selected as USART1 clock

1. Not available for STM32L431xx devices.

6.4.28 Backup domain control register (RCC_BDCR)

Address offset: 0x90
Reset value: 0x0000 0000, reset by Backup domain Reset, except LSCOSEL, LSCOEN and BDRST which are reset only by Backup domain power-on reset.
Access: 0 ≤ wait state ≤ 3, word, half-word and byte access
Wait states are inserted in case of successive accesses to this register.

Note: The bits of the Backup domain control register (RCC_BDCR) are outside of the V_{CORE} domain. As a result, after Reset, these bits are write-protected and the DBP bit in the Section 5.4.1: Power control register 1 (PWR_CR1) has to be set before these can be modified. Refer to Section 5.1.4: Battery backup domain on page 124 for further information. These bits (except LSCOSEL, LSCOEN and BDRST) are only reset after a Backup domain Reset (see Section 6.1.3: Backup domain reset). Any internal or external Reset will not have any effect on these bits.

31	30	29	28	27	26	25	24	23	22	21	20	19	18	17	16
Res.	Res.	Res.	Res.	Res.	Res.	LSCO SEL	LSCO EN	Res.	Res.	Res.	Res.	Res.	Res.	Res.	BDRST
						rw	rw								rw

15	14	13	12	11	10	9	8	7	6	5	4	3	2	1	0
RTC EN	Res.	Res.	Res.	Res.	Res.	RTCSEL[1:0]		Res.	LSE CSSD	LSE CSSON	LSEDRV[1:0]		LSE BYP	LSE RDY	LSEON
rw						rw	rw		r	rw	rw	rw	rw	r	rw

Bits 31:26 Reserved, must be kept at reset value.

Bit 25 **LSCOSEL:** Low speed clock output selection
Set and cleared by software.
0: LSI clock selected
1: LSE clock selected

Bit 24 **LSCOEN:** Low speed clock output enable
Set and cleared by software.
0: Low speed clock output (LSCO) disable
1: Low speed clock output (LSCO) enable

Bits 23:17 Reserved, must be kept at reset value.

Bit 16 **BDRST:** Backup domain software reset
Set and cleared by software.
0: Reset not activated
1: Resets the entire Backup domain

Bit 15 **RTCEN:** RTC clock enable
Set and cleared by software.
0: RTC clock disabled
1: RTC clock enabled

Bits 14:10 Reserved, must be kept at reset value.

Bits 9:8 **RTCSEL[1:0]:** RTC clock source selection
Set by software to select the clock source for the RTC. Once the RTC clock source has been selected, it cannot be changed anymore unless the Backup domain is reset, or unless a failure is detected on LSE (LSECSSD is set). The BDRST bit can be used to reset them.
00: No clock
01: LSE oscillator clock used as RTC clock
10: LSI oscillator clock used as RTC clock
11: HSE oscillator clock divided by 32 used as RTC clock

Bit 7 Reserved, must be kept at reset value.

Bit 6 **LSECSSD** CSS on LSE failure Detection
Set by hardware to indicate when a failure has been detected by the Clock Security System on the external 32 kHz oscillator (LSE).
0: No failure detected on LSE (32 kHz oscillator)
1: Failure detected on LSE (32 kHz oscillator)

Bit 5 **LSECSSON** CSS on LSE enable
Set by software to enable the Clock Security System on LSE (32 kHz oscillator).
LSECSSON must be enabled after the LSE oscillator is enabled (LSEON bit enabled) and ready (LSERDY flag set by hardware), and after the RTCSEL bit is selected.
Once enabled this bit cannot be disabled, except after a LSE failure detection (LSECSSD =1). In that case the software MUST disable the LSECSSON bit.
0: CSS on LSE (32 kHz external oscillator) OFF
1: CSS on LSE (32 kHz external oscillator) ON

Bits 4:3 **LSEDRV[1:0]** LSE oscillator drive capability

Set by software to modulate the LSE oscillator's drive capability.
00: 'Xtal mode' lower driving capability
01: 'Xtal mode' medium low driving capability
10: 'Xtal mode' medium high driving capability
11: 'Xtal mode' higher driving capability
The oscillator is in Xtal mode when it is not in bypass mode.

Bit 2 **LSEBYP:** LSE oscillator bypass

Set and cleared by software to bypass oscillator in debug mode. This bit can be written only when the external 32 kHz oscillator is disabled (LSEON=0 and LSERDY=0).
0: LSE oscillator not bypassed
1: LSE oscillator bypassed

Bit 1 **LSERDY:** LSE oscillator ready

Set and cleared by hardware to indicate when the external 32 kHz oscillator is stable. After the LSEON bit is cleared, LSERDY goes low after 6 external low-speed oscillator clock cycles.
0: LSE oscillator not ready
1: LSE oscillator ready

Bit 0 **LSEON:** LSE oscillator enable

Set and cleared by software.
0: LSE oscillator OFF
1: LSE oscillator ON

6.4.29 Control/status register (RCC_CSR)

Address: 0x94

Reset value: 0x0C00 0600, reset by system Reset, except reset flags by power Reset only.

Access: 0 ≤ wait state ≤ 3, word, half-word and byte access

Wait states are inserted in case of successive accesses to this register.

31	30	29	28	27	26	25	24	23	22	21	20	19	18	17	16
LPWR RSTF	WWDG RSTF	IWWG RSTF	SFT RSTF	BOR RSTF	PIN RSTF	OB L RSTF	FW RSTF	RMVF	Res.	Res.	Res.	Res.	Res.	Res.	Res.
r	r	r	r	r	r	r	r	rw							

15	14	13	12	11	10	9	8	7	6	5	4	3	2	1	0
Res.	Res.	Res.	Res.	MSISRANGE[3:0]				Res.	Res.	Res.	Res.	Res.	Res.	LSI RDY	LSION
				rw	rw	rw	rw							r	rw

Bit 31 **LPWRRSTF:** Low-power reset flag

Set by hardware when a reset occurs due to illegal Stop, Standby or Shutdown mode entry.
Cleared by writing to the RMVF bit.
0: No illegal mode reset occurred
1: Illegal mode reset occurred

Bit 30 **WWDGRSTF:** Window watchdog reset flag

Set by hardware when a window watchdog reset occurs.
Cleared by writing to the RMVF bit.
0: No window watchdog reset occurred
1: Window watchdog reset occurred

Bit 29 **IWDGRSTF**: Independent window watchdog reset flag

Set by hardware when an independent watchdog reset domain occurs.
Cleared by writing to the RMVF bit.
0: No independent watchdog reset occurred
1: Independent watchdog reset occurred

Bit 28 **SFTRSTF:** Software reset flag

Set by hardware when a software reset occurs.
Cleared by writing to the RMVF bit.
0: No software reset occurred
1: Software reset occurred

Bit 27 **BORRSTF:** BOR flag

Set by hardware when a BOR occurs.
Cleared by writing to the RMVF bit.
0: No BOR occurred
1: BOR occurred

Bit 26 **PINRSTF:** Pin reset flag

Set by hardware when a reset from the NRST pin occurs.
Cleared by writing to the RMVF bit.
0: No reset from NRST pin occurred
1: Reset from NRST pin occurred

Bit 25 **OBLRSTF:** Option byte loader reset flag

Set by hardware when a reset from the Option Byte loading occurs.
Cleared by writing to the RMVF bit.
0: No reset from Option Byte loading occurred
1: Reset from Option Byte loading occurred

Bit 24 **FWRSTF:** Firewall reset flag

Set by hardware when a reset from the firewall occurs.
Cleared by writing to the RMVF bit.
0: No reset from the firewall occurred
1: Reset from the firewall occurred

Bit 23 **RMVF:** Remove reset flag

Set by software to clear the reset flags.
0: No effect
1: Clear the reset flags

Bits 22:12 Reserved, must be kept at reset value.

Bits 11:8 **MSISRANGE[3:1]** MSI range after Standby mode

Set by software to chose the MSI frequency at startup. This range is used after exiting Standby mode until MSIRGSEL is set. After a pad or a power-on reset, the range is always 4 MHz. MSISRANGE can be written only when MSIRGSEL = ‘1’.

0100: Range 4 around 1 MHz
0101: Range 5 around 2 MHz
0101: Range 6 around 4 MHz (reset value)
0111: Range 7 around 8 MHz
others: reserved

Note: Changing the MSISRANGE does not change the current MSI frequency.

Bits 7:2 Reserved, must be kept at reset value.

Bit 1 **LSIRDY:** LSI oscillator ready

Set and cleared by hardware to indicate when the LSI oscillator is stable. After the LSION bit is cleared, LSIRDY goes low after 3 LSI oscillator clock cycles. This bit can be set even if LSION = 0 if the LSI is requested by the Clock Security System on LSE, by the Independent Watchdog or by the RTC.

0: LSI oscillator not ready
1: LSI oscillator ready

Bit 0 **LSION:** LSI oscillator enable

Set and cleared by software.

0: LSI oscillator OFF
1: LSI oscillator ON

6.4.30 Clock recovery RC register (RCC_CRRCR)

Address: 0x98

Reset value: 0x0000 XXX0 where X is factory-programmed.

Access: no wait state, word, half-word and byte access

31	30	29	28	27	26	25	24	23	22	21	20	19	18	17	16
Res.	Res.	Res.	Res.	Res.	Res.	Res.	Res.	Res.	Res.	Res.	Res.	Res.	Res.	Res.	Res.

15	14	13	12	11	10	9	8	7	6	5	4	3	2	1	0
HSI48CAL[8:0]									Res.	Res.	Res.	Res.	Res.	HSI48 RDY	HSI48 ON
r	r	r	r	r	r	r	r	r						r	rw

Bits 31:16 Reserved, must be kept at reset value

Bits 15:7 **HSI48CAL[8:0]:** HSI48 clock calibration

These bits are initialized at startup with the factory-programmed HSI48 calibration trim value. They are ready only.

Bits 6:2 Reserved, must be kept at reset value

Bit 1 **HSI48RDY:** HSI48 clock ready flag

Set by hardware to indicate that HSI48 oscillator is stable. This bit is set only when HSI48 is enabled by software by setting HSI48ON.

0: HSI48 oscillator not ready

1: HSI48 oscillator ready

Bit 0 HSI48ON: HSI48 clock enable

Set and cleared by software.

Cleared by hardware to stop the HSI48 when entering in Stop, Standby or Shutdown modes.

0: HSI48 oscillator OFF

1: HSI48 oscillator ON

6.4.31 RCC register map

The following table gives the RCC register map and the reset values.

Table 31. RCC register map and reset values

Off-set	Register	31	30	29	28	27	26	25	24	23	22	21	20	19	18	17	16	15	14	13	12	11	10	9	8	7	6	5	4	3	2	1	0
0x00	RCC_CR	Res.	Res.	Res.	Res.	PLLSAI1RDY	PLLSAI1ON	PLLRDY	PLLON	Res.	Res.	Res.	Res.	CSSON	HSEBYP	HSERDY	HSEON	Res.	Res.	Res.	Res.	HSIASFS	HSIRDY	HSIKERON	HSION	MSIRANGE [3:0]				MSIRGSEL	MSIPLLEN	MSIRDY	MSION
	Reset value					0	0	0	0					0	0	0	0					0	0	0	0	0	1	1	0	0	0	1	1
0x04	RCC_ICSCR	Res.	Res.	Res.	HSITRIM[4:0]					HSICAL[7:0]								MSITRIM[7:0]								MSICAL[7:0]							
	Reset value				1	0	0	0	0	x	x	x	x	x	x	x	x	0	0	0	0	0	0	0	0	x	x	x	x	x	x	x	x
0x08	RCC_CFGR	Res.	MCOPRE [2:0]			MCOSEL [3:0]				Res.	Res.	Res.	Res.	Res.	Res.	Res.	Res.	STOPWUCK	Res.	PPRE2 [2:0]			PPRE1 [2:0]			HPRE[3:0]				SWS [1:0]		SW [1:0]	
	Reset value		0	0	0	0	0	0	0									0		0	0	0	0	0	0	0	0	0	0	0	0	0	0
0x0C	RCC_PLLCFGR	PLLPDIV[4:0]					PLLR [1:0]		PLLREN	Res.	PLLQ [1:0]		PLLQEN	Res.	Res.	PLLP	PLLPEN	Res.	PLLN [6:0]							Res.	PLLM [2:0]			Res.	Res.	PLLSRC [1:0]	
	Reset value	0	0	0	0	0	0	0	0		0	0	0			0	0		0	0	1	0	0	0	0		0	0	0			0	0
0x10	RCC_PLLSAI1CFGR	PLLSAI1PDIV [4:0]					PLLSAI1R [1:0]		PLLSAI1REN	Res.	PLLSAI1Q [1:0]		PLLSAI1QEN	Res.	Res.	PLLSAI1P	PLLSAI1PEN	Res.	PLLSAI1N [6:0]							Res.	Res.	Res.	Res.	Res.	Res.	Res.	Res.
	Reset value	0	0	0	0	0	0	0	0		0	0	0			0	0		0	0	1	0	0	0	0								

Table 31. RCC register map and reset values (continued)

Off-set	Register	31	30	29	28	27	26	25	24	23	22	21	20	19	18	17	16	15	14	13	12	11	10	9	8	7	6	5	4	3	2	1	0
0x18	RCC_CIER	Res.	Res.	Res.	Res.	Res.	Res.	Res.	Res.	Res.	Res.	Res.	Res.	Res.	Res.	Res.	Res.	Res.	Res.	Res.	Res.	Res.	HSI48RDYIE	LSECSSIE	Res.	Res.	PLLSAI1RDYIE	PLLRDYIE	HSERDYIE	HSIRDYIE	MSIRDYIE	LSERDYIE	LSIRDYIE
	Reset value																						0	0			0	0	0	0	0	0	0
0x1C	RCC_CIFR	Res.	Res.	Res.	Res.	Res.	Res.	Res.	Res.	Res.	Res.	Res.	Res.	Res.	Res.	Res.	Res.	Res.	Res.	Res.	Res.	Res.	HSI48RDYF	LSECSSF	CSSF	Res.	PLLSAI1RDYF.	PLLRDYF	HSERDYF	HSIRDYF	MSIRDYF	LSERDYF	LSIRDYF
	Reset value																						0	0	0		0	0	0	0	0	0	0
0x20	RCC_CICR	Res.	Res.	Res.	Res.	Res.	Res.	Res.	Res.	Res.	Res.	Res.	Res.	Res.	Res.	Res.	Res.	Res.	Res.	Res.	Res.	Res.	HSI48RDYC	LSECSSC	CSSC	Res.	PLLSAI1RDYC	PLLRDYC	HSERDYC	HSIRDYC	MSIRDYC	LSERDYC	LSIRDYC
	Reset value																						0	0	0		0	0	0	0	0	0	0
0x28	RCC_ AHB1RSTR	Res.	Res.	Res.	Res.	Res.	Res.	Res.	Res.	Res.	Res.	Res.	Res.	Res.	Res.	Res.	TSCRST	Res.	Res.	Res.	CRCRST	Res.	Res.	Res.	FLASHRST	Res.	Res.	Res.	Res.	Res.	Res.	DMA2RST	DMA1RST
	Reset value																0				0				0							0	0
0x2C	RCC_ AHB2RSTR	Res.	Res.	Res.	Res.	Res.	Res.	Res.	Res.	Res.	Res.	Res.	Res.	Res.	RNGRST	Res.	AESRST(1)	Res.	Res.	ADCRST	Res.	Res.	Res.	Res.	Res.	GPIOHRST	Res.	Res.	GPIOERST	GPIODRST	GPIOCRST	GPIOBRST	GPIOARST
	Reset value														0		0			0						0			0	0	0	0	0
0x30	RCC_ AHB3RSTR	Res.	Res.	Res.	Res.	Res.	Res.	Res.	Res.	Res.	Res.	Res.	Res.	Res.	Res.	Res.	Res.	Res.	Res.	Res.	Res.	Res.	Res.	Res.	QSPIRST	Res.	Res.	Res.	Res.	Res.	Res.	Res.	Res.
	Reset value																								0								
0x38	RCC_ APB1RSTR1	LPTIM1RST	OPAMPRST	DAC1RST	PWRRST	Res.	USBFSRST(2)	CAN1RST	CRSRST	I2C3RST	I2C2RST	I2C1RST	Res.	Res.	USART3RST	USART2RST	Res.	SPI3RST	SPI2RST	Res.	Res.	Res.	Res.	LCDRST(2)	Res.	Res.	Res.	TIM7RST	TIM6RST	Res.	Res.	Res.	Res.	TIM2RST
	Reset value	0	0	0	0		0	0	0	0	0	0			0	0		0	0					0				0	0				0
0x3C	RCC_ APB1RSTR2	Res.	Res.	Res.	Res.	Res.	Res.	Res.	Res.	Res.	Res.	Res.	Res.	Res.	Res.	Res.	Res.	Res.	Res.	Res.	Res.	Res.	Res.	Res.	Res.	Res.	Res.	LPTIM2RST	Res.	Res.	SWPMI1RST	Res.	LPUART1RST
	Reset value																											0			0		0

Table 31. RCC register map and reset values (continued)

Off-set	Register	31	30	29	28	27	26	25	24	23	22	21	20	19	18	17	16	15	14	13	12	11	10	9	8	7	6	5	4	3	2	1	0
0x40	RCC_ APB2RSTR	Res.	Res.	Res.	Res.	Res.	Res.	Res.	Res.	Res.	Res.	SAI1RST	Res.	Res.	Res.	TIM16RST	TIM15RST	Res.	USART1RST	Res.	SPI1RST	TIM1RST	SDMMC1RST	Res.	Res.	Res.	Res.	Res.	Res.	Res.	Res.	Res.	SYSCFGRST
	Reset value											0				0	0		0		0	0	0										0
0x48	RCC_AHB1 ENR	Res.	Res.	Res.	Res.	Res.	Res.	Res.	Res.	Res.	Res.	Res.	Res.	Res.	Res.	Res.	TSCEN	Res.	Res.	Res.	CRCEN	Res.	Res.	Res.	FLASHEN	Res.	Res.	Res.	Res.	Res.	Res.	DMA2EN	DMA1EN
	Reset value																0				0				1							0	0
0x4C	RCC_AHB2 ENR	Res.	Res.	Res.	Res.	Res.	Res.	Res.	Res.	Res.	Res.	Res.	Res.	Res.	RNGEN	Res.	AESEN(1)	Res.	Res.	ADCEN	Res.	Res.	Res.	Res.	Res.	GPIOHEN	Res.	Res.	GPIOEEN	GPIODEN	GPIOCEN	GPIOBEN	GPIOAEN
	Reset value														0		0			0						0			0	0	0	0	0
0x50	RCC_AHB3 ENR	Res.	Res.	Res.	Res.	Res.	Res.	Res.	Res.	Res.	Res.	Res.	Res.	Res.	Res.	Res.	Res.	Res.	Res.	Res.	Res.	Res.	Res.	Res.	QSPIEN	Res.	Res.	Res.	Res.	Res.	Res.	Res.	Res.
	Reset value																								0								
0x58	RCC_ APB1ENR1	LPTIM1EN	OPAMPEN	DAC1EN	PWREN	Res.	USBFSEN(2)	CAN1EN	CRSEN	I2C3EN	I2C2EN	I2C1EN	Res.	Res.	USART3EN	USART2EN	Res.	SP3EN	SPI2EN	Res.	Res.	WWDGEN	RTCAPBEN	LCDEN(2)	Res.	Res.	Res.	TIM7EN	TIM6EN	Res.	Res.	Res.	TIM2EN
	Reset value	0	0	0	0		0	0	0	0	0	0			0	0		0	0			0	1	0				0	0				0
0x5C	RCC_ APB1ENR2	Res.	Res.	Res.	Res.	Res.	Res.	Res.	Res.	Res.	Res.	Res.	Res.	Res.	Res.	Res.	Res.	Res.	Res.	Res.	Res.	Res.	Res.	Res.	Res.	Res.	Res.	LPTIM2EN	Res.	Res.	SWPMI1EN	Res.	LPUART1EN
	Reset value																											0			0		0
0x60	RCC_ APB2ENR	Res.	Res.	Res.	Res.	Res.	Res.	Res.	Res.	Res.	Res.	SAI1EN	Res.	Res.	Res.	TIM16EN	TIM15EN	Res.	USART1EN	Res.	SPI1EN	TIM1EN	SDMMC1EN	Res.	Res.	FWEN	Res.	Res.	Res.	Res.	Res.	Res.	SYSCFGEN
	Reset value											0				0	0		0		0	0	0			0							0
0x68	RCC_ AHB1SMENR	Res.	Res.	Res.	Res.	Res.	Res.	Res.	Res.	Res.	Res.	Res.	Res.	Res.	Res.	Res.	TSCSMEN	Res.	Res.	Res.	CRCSMEN	Res.	Res.	SRAM1SMEN	FLASHSMEN	Res.	Res.	Res.	Res.	Res.	Res.	DMA2SMEN	DMA1SMEN
	Reset value																1				1			1	1							1	1

Table 31. RCC register map and reset values (continued)

Off-set	Register	31	30	29	28	27	26	25	24	23	22	21	20	19	18	17	16	15	14	13	12	11	10	9	8	7	6	5	4	3	2	1	0
0x6C	RCC_ AHB2SMENR	Res.	Res.	Res.	Res.	Res.	Res.	Res.	Res.	Res.	Res.	Res.	Res.	Res.	RNGSMEN	Res.	AESSMEN(1)	Res.	Res.	ADCFSSMEN	Res.	Res.	Res.	SRAM2SMEN	Res.	GPIOHSMEN	Res.	Res.	GPIOESMEN	GPIODSMEN	GPIOCSMEN	GPIOBSMEN	GPIOASMEN
	Reset value														1		1			1				1		1			1	1	1	1	1
0x70	RCC_ AHB3SMENR	Res.	Res.	Res.	Res.	Res.	Res.	Res.	Res.	Res.	Res.	Res.	Res.	Res.	Res.	Res.	Res.	Res.	Res.	Res.	Res.	Res.	Res.	Res.	QSPISMEN	Res.	Res.	Res.	Res.	Res.	Res.	Res.	Res.
	Reset value																								1								
0x78	RCC_ APB1SM ENR1	LPTIM1SMEN	OPAMPSMEN	DAC1SMEN	PWRSMEN	Res.	USBFSSMEN(2)	CAN1SMEN	CRSSMEN	I2C3SMEN	I2C2SMEN	I2C1SMEN	Res.	Res.	USART3SMEN	USART2SMEN	Res.	SP3SMEN	SPI2SMEN	Res.	Res.	WWDGSMEN	RTCAPBSMEN	LCDSMEN(2)	Res.	Res.	Res.	TIM7SMEN	TIM6SMEN	Res.	Res.	Res.	TIM2SMEN
	Reset value	1	1	1	1		1	1	1	1	1	1			1	1		1	1			1	1	1				1	1				1
0x7C	RCC_ APB1SM ENR2	Res.	Res.	Res.	Res.	Res.	Res.	Res.	Res.	Res.	Res.	Res.	Res.	Res.	Res.	Res.	Res.	Res.	Res.	Res.	Res.	Res.	Res.	Res.	Res.	Res.	Res.	LPTIM2SMEN	Res.	Res.	SWPMI1SMEN	Res.	LPUART1SMEN
	Reset value																											1			1		1
0x80	RCC_ APB2SMENR	Res.	Res.	Res.	Res.	Res.	Res.	Res.	Res.	Res.	Res.	SAI1SMEN	Res.	Res.	Res.	TIM16SMEN	TIM15SMEN	Res.	USART1SMEN	Res.	SPI1SMEN	TIM1SMEN	SDMMC1SMEN	Res.	Res.	Res.	Res.	Res.	Res.	Res.	Res.	Res.	SYSCFGSMEN
	Reset value											1				1	1		1		1	1	1										1
0x88	RCC_CCIPR	Res.	SWPMI1SEL	ADCSEL		CLK48SEL		Res.	Res.	SAI1SEL		LPTIM2SEL		LPTIM1SEL		I2C3SEL		I2C2SEL		I2C1SEL		LPUART1SEL		Res.	Res.	Res.	Res.	USART3SEL		USART2SEL		USART1SEL	
	Reset value		0	0	0	0	0			0	0	0	0	0	0	0	0	0	0	0	0	0	0					0	0	0	0	0	0
0x90	RCC_BDCR	Res.	Res.	Res.	Res.	Res.	Res.	LSCOSEL	LSCOEN	Res.	Res.	Res.	Res.	Res.	Res.	Res.	BDRST	RTCEN	Res.	Res.	Res.	Res.	Res.	RTC SEL [1:0]		Res.	LSECSSD	LSECSSON	LSE DRV [1:0]		LSEBYP	LSERDY	LSEON
	Reset value							0	0								0	0						0	0		0	0	0	0	0	0	0

Table 31. RCC register map and reset values (continued)

Off-set	Register	31	30	29	28	27	26	25	24	23	22	21	20	19	18	17	16	15	14	13	12	11	10	9	8	7	6	5	4	3	2	1	0
0x94	RCC_CSR	LPWRRSTF	WWDGRSTF	IWDGRSTF	SFTRSTF	BORRSTF	PINRSTF	OBLRSTF	FIREWALLRSTF	RMVF	Res.	Res.	Res.	Res.	Res.	Res.	Res.	Res.	Res.	Res.	Res.	MSIS RANGE[3:0]				Res.	Res.	Res.	Res.	Res.	Res.	LSIRDY	LSION
	Reset value	0	0	0	0	0	0	0	0	0												0	1	1	0							0	0
0x98	RCC_CRRCR	Res.	Res.	Res.	Res.	Res.	Res.	Res.	Res.	Res.	Res.	Res.	Res.	Res.	Res.	Res.	Res.	HSI48CAL[8:0]									Res.	Res.	Res.	Res.	Res.	HSI48RDY	HSI48ON
	Reset value																	x	x	x	x	x	x	x	x	x						0	0

1. Not available for STM32L431xx and STM32L433xx devices.
2. Not available for STM32L431xx devices.

7 Clock recovery system (CRS)

7.1 Introduction

The clock recovery system (CRS) is an advanced digital controller acting on the internal fine-granularity trimmable RC oscillator HSI48. The CRS provides a powerful means for oscillator output frequency evaluation, based on comparison with a selectable synchronization signal. It is capable of doing automatic adjustment of oscillator trimming based on the measured frequency error value, while keeping the possibility of a manual trimming.

The CRS is ideally suited to provide a precise clock to the USB[(a)] peripheral. In such case, the synchronization signal can be derived from the start-of-frame (SOF) packet signalization on the USB bus, which is sent by a USB host at precise 1-ms intervals.

The synchronization signal can also be derived from the LSE oscillator output or it can be generated by user software.

7.2 CRS main features

- Selectable synchronization source with programmable prescaler and polarity:
  - External pin
  - LSE oscillator output
  - USB[(a)] SOF packet reception
- Possibility to generate synchronization pulses by software
- Automatic oscillator trimming capability with no need of CPU action
- Manual control option for faster start-up convergence
- 16-bit frequency error counter with automatic error value capture and reload
- Programmable limit for automatic frequency error value evaluation and status reporting
- Maskable interrupts/events:
  - Expected synchronization (ESYNC)
  - Synchronization OK (SYNCOK)
  - Synchronization warning (SYNCWARN)
  - Synchronization or trimming error (ERR)

a. Not available for STM32L431xx devices.

7.3 CRS functional description

7.3.1 CRS block diagram

Figure 16. CRS block diagram

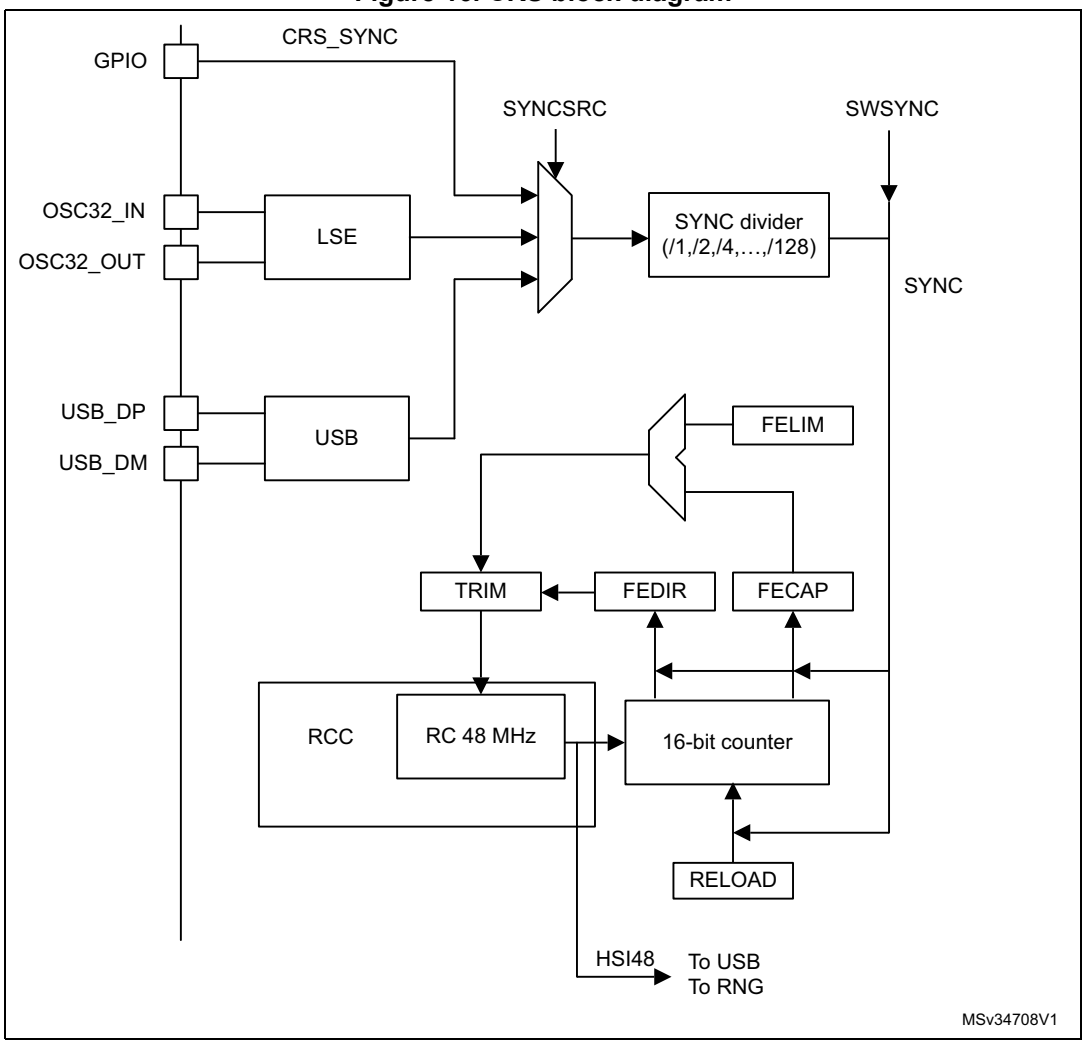

7.3.2 Synchronization input

The CRS synchronization (SYNC) source, selectable through the CRS_CFGR register, can be the signal from the LSE clock or the USB[(a)] SOF signal. For a better robustness of the SYNC input, a simple digital filter (2 out of 3 majority votes, sampled by the HSI48 clock) is implemented to filter out any glitches. This source signal also has a configurable polarity and can then be divided by a programmable binary prescaler to obtain a synchronization signal in a suitable frequency range (usually around 1 kHz).

a. Not available for STM32L431xx devices.

For more information on the CRS synchronization source configuration, refer to *Section 7.6.2: CRS configuration register (CRS_CFGR)*.

It is also possible to generate a synchronization event by software, by setting the SWSYNC bit in the CRS_CR register.

7.3.3 Frequency error measurement

The frequency error counter is a 16-bit down/up counter which is reloaded with the RELOAD value on each SYNC event. It starts counting down till it reaches the zero value, where the ESYNC (expected synchronization) event is generated. Then it starts counting up to the OUTRANGE limit where it eventually stops (if no SYNC event is received) and generates a SYNCMISS event. The OUTRANGE limit is defined as the frequency error limit (FELIM field of the CRS_CFGR register) multiplied by 128.

When the SYNC event is detected, the actual value of the frequency error counter and its counting direction are stored in the FECAP (frequency error capture) field and in the FEDIR (frequency error direction) bit of the CRS_ISR register. When the SYNC event is detected during the downcounting phase (before reaching the zero value), it means that the actual frequency is lower than the target (and so, that the TRIM value should be incremented), while when it is detected during the upcounting phase it means that the actual frequency is higher (and that the TRIM value should be decremented).

Figure 17. CRS counter behavior

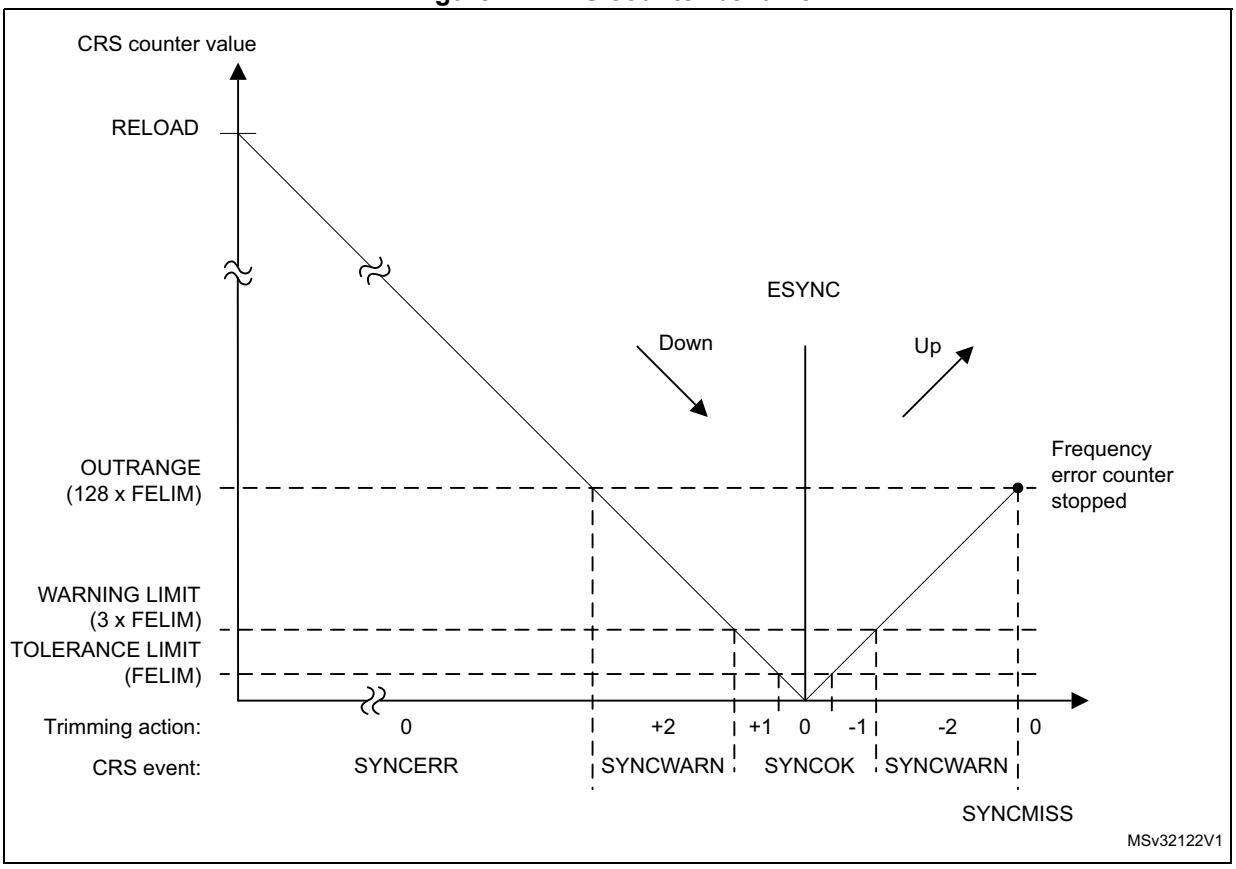

7.3.4 Frequency error evaluation and automatic trimming

The measured frequency error is evaluated by comparing its value with a set of limits:

- TOLERANCE LIMIT, given directly in the FELIM field of the CRS_CFGR register
- WARNING LIMIT, defined as 3 * FELIM value
- OUTRANGE (error limit), defined as 128 * FELIM value

The result of this comparison is used to generate the status indication and also to control the automatic trimming which is enabled by setting the AUTOTRIMEN bit in the CRS_CR register:

- When the frequency error is below the tolerance limit, it means that the actual trimming value in the TRIM field is the optimal one and that then, no trimming action is necessary.
  - SYNCOK status indicated
  - TRIM value not changed in AUTOTRIM mode
- When the frequency error is below the warning limit but above or equal to the tolerance limit, it means that some trimming action is necessary but that adjustment by one trimming step is enough to reach the optimal TRIM value.
  - SYNCOK status indicated
  - TRIM value adjusted by one trimming step in AUTOTRIM mode
- When the frequency error is above or equal to the warning limit but below the error limit, it means that a stronger trimming action is necessary, and there is a risk that the optimal TRIM value will not be reached for the next period.
  - SYNCWARN status indicated
  - TRIM value adjusted by two trimming steps in AUTOTRIM mode
- When the frequency error is above or equal to the error limit, it means that the frequency is out of the trimming range. This can also happen when the SYNC input is not clean or when some SYNC pulse is missing (for example when one USB[(a)] SOF is corrupted).
  - SYNCERR or SYNCMISS status indicated
  - TRIM value not changed in AUTOTRIM mode

Note: If the actual value of the TRIM field is so close to its limits that the automatic trimming would force it to overflow or underflow, then the TRIM value is set just to the limit and the TRIMOVF status is indicated.

In AUTOTRIM mode (AUTOTRIMEN bit set in the CRS_CR register), the TRIM field of CRS_CR is adjusted by hardware and is read-only.

7.3.5 CRS initialization and configuration

RELOAD value

The RELOAD value should be selected according to the ratio between the target frequency and the frequency of the synchronization source after prescaling. It is then decreased by one in order to reach the expected synchronization on the zero value. The formula is the following:

a. Not available for STM32L431xx devices.

RELOAD = (f_{TARGET} / f_{SYNC}) -1

The reset value of the RELOAD field corresponds to a target frequency of 48 MHz and a synchronization signal frequency of 1 kHz (SOF signal from USB[(a)]).

FELIM value

The selection of the FELIM value is closely coupled with the HSI48 oscillator characteristics and its typical trimming step size. The optimal value corresponds to half of the trimming step size, expressed as a number of HSI48 oscillator clock ticks. The following formula can be used:

FELIM = (f_{TARGET} / f_{SYNC}) * STEP[%] / 100% / 2

The result should be always rounded up to the nearest integer value in order to obtain the best trimming response. If frequent trimming actions are not wanted in the application, the trimming hysteresis can be increased by increasing slightly the FELIM value.

The reset value of the FELIM field corresponds to (f_{TARGET} / f_{SYNC}) = 48000 and to a typical trimming step size of 0.14%.

Caution: There is no hardware protection from a wrong configuration of the RELOAD and FELIM fields which can lead to an erratic trimming response. The expected operational mode requires proper setup of the RELOAD value (according to the synchronization source frequency), which is also greater than 128 * FELIM value (OUTRANGE limit).

7.4 CRS low-power modes

Table 32. Effect of low-power modes on CRS

Mode	Description
Sleep	No effect. CRS interrupts cause the device to exit the Sleep mode.
Stop	CRS registers are frozen.
Standby	The CRS stops operating until the Stop or Standby mode is exited and the HSI48 oscillator restarted.

a. Not available for STM32L431xx devices.

7.5 CRS interrupts

Table 33. Interrupt control bits

Interrupt event	Event flag	Enable control bit	Clear flag bit
Expected synchronization	ESYNCF	ESYNCIE	ESYNCC
Synchronization OK	SYNCOKF	SYNCOKIE	SYNCOKC
Synchronization warning	SYNCWARNF	SYNCWARNIE	SYNCWARNC
Synchronization or trimming error (TRIMOVF, SYNCMISS, SYNCERR)	ERRF	ERRIE	ERRC

7.6 CRS registers

Refer to *Section 1.1 on page 55* of the reference manual for a list of abbreviations used in register descriptions.

The peripheral registers can be accessed by words (32-bit).

7.6.1 CRS control register (CRS_CR)

Address offset: 0x00

Reset value: 0x0000 2000

31	30	29	28	27	26	25	24	23	22	21	20	19	18	17	16
Res.	Res.	Res.	Res.	Res.	Res.	Res.	Res.	Res.	Res.	Res.	Res.	Res.	Res.	Res.	Res.

15	14	13	12	11	10	9	8	7	6	5	4	3	2	1	0
Res.	Res.	TRIM[5:0]						SWSYNC	AUTOTRIMEN	CEN	Res.	ESYNCIE	ERRIE	SYNCWARNIE	SYNCOKIE
		rw	rw	rw	rw	rw	rw	rt_w	rw	rw		rw	rw	rw	rw

Bits 31:14 Reserved, must be kept at reset value.

Bits 13:8 **TRIM[5:0]**: HSI48 oscillator smooth trimming

These bits provide a user-programmable trimming value to the HSI48 oscillator. They can be programmed to adjust to variations in voltage and temperature that influence the frequency of the HSI48.

The default value is 32, which corresponds to the middle of the trimming interval. The trimming step is around 67 kHz between two consecutive TRIM steps. A higher TRIM value corresponds to a higher output frequency.

When the AUTOTRIMEN bit is set, this field is controlled by hardware and is read-only.

Bit 7 **SWSYNC**: Generate software SYNC event

This bit is set by software in order to generate a software SYNC event. It is automatically cleared by hardware.

0: No action

1: A software SYNC event is generated.

Bit 6 **AUTOTRIMEN**: Automatic trimming enable

This bit enables the automatic hardware adjustment of TRIM bits according to the measured frequency error between two SYNC events. If this bit is set, the TRIM bits are read-only. The TRIM value can be adjusted by hardware by one or two steps at a time, depending on the measured frequency error value. Refer to *Section 7.3.4: Frequency error evaluation and automatic trimming* for more details.

0: Automatic trimming disabled, TRIM bits can be adjusted by the user.

1: Automatic trimming enabled, TRIM bits are read-only and under hardware control.

Bit 5 **CEN**: Frequency error counter enable

This bit enables the oscillator clock for the frequency error counter.

0: Frequency error counter disabled

1: Frequency error counter enabled

When this bit is set, the CRS_CFGR register is write-protected and cannot be modified.

Bit 4 Reserved, must be kept at reset value.

Bit 3 **ESYNCIE**: Expected SYNC interrupt enable

0: Expected SYNC (ESYNCF) interrupt disabled

1: Expected SYNC (ESYNCF) interrupt enabled

Bit 2 **ERRIE**: Synchronization or trimming error interrupt enable

0: Synchronization or trimming error (ERRF) interrupt disabled

1: Synchronization or trimming error (ERRF) interrupt enabled

Bit 1 **SYNCWARNIE**: SYNC warning interrupt enable

0: SYNC warning (SYNCWARNF) interrupt disabled

1: SYNC warning (SYNCWARNF) interrupt enabled

Bit 0 **SYNCOKIE**: SYNC event OK interrupt enable

0: SYNC event OK (SYNCOKF) interrupt disabled

1: SYNC event OK (SYNCOKF) interrupt enabled

7.6.2 CRS configuration register (CRS_CFGR)

This register can be written only when the frequency error counter is disabled (CEN bit is cleared in CRS_CR). When the counter is enabled, this register is write-protected.

Address offset: 0x04

Reset value: 0x2022 BB7F

31	30	29	28	27	26	25	24	23	22	21	20	19	18	17	16
SYNCPOL	Res.	SYNCSRC[1:0]		Res.	SYNCDIV[2:0]			FELIM[7:0]							
rw		rw	rw		rw	rw	rw	rw	rw	rw	rw	rw	rw	rw	rw
15	14	13	12	11	10	9	8	7	6	5	4	3	2	1	0
RELOAD[15:0]															
rw	rw	rw	rw	rw	rw	rw	rw	rw	rw	rw	rw	rw	rw	rw	rw

Bit 31 **SYNCPOL**: SYNC polarity selection

This bit is set and cleared by software to select the input polarity for the SYNC signal source.
0: SYNC active on rising edge (default)
1: SYNC active on falling edge

Bit 30 Reserved, must be kept at reset value.

Bits 29:28 **SYNCSRC[1:0]**: SYNC signal source selection

These bits are set and cleared by software to select the SYNC signal source.
00: GPIO selected as SYNC signal source
01: LSE selected as SYNC signal source
10: USB[(1)] SOF selected as SYNC signal source (default)
11: Reserved

Note: When using USB[(1)] LPM (Link Power Management) and the device is in Sleep mode, the periodic USB SOF will not be generated by the host. No SYNC signal will therefore be provided to the CRS to calibrate the HSI48 on the run. To guarantee the required clock precision after waking up from Sleep mode, the LSE or reference clock on the GPIOs should be used as SYNC signal.

Bit 27 Reserved, must be kept at reset value.

Bits 26:24 **SYNCDIV[2:0]**: SYNC divider

These bits are set and cleared by software to control the division factor of the SYNC signal.
000: SYNC not divided (default)
001: SYNC divided by 2
010: SYNC divided by 4
011: SYNC divided by 8
100: SYNC divided by 16
101: SYNC divided by 32
110: SYNC divided by 64
111: SYNC divided by 128

Bits 23:16 **FELIM[7:0]**: Frequency error limit

FELIM contains the value to be used to evaluate the captured frequency error value latched in the FECAP[15:0] bits of the CRS_ISR register. Refer to *Section 7.3.4: Frequency error evaluation and automatic trimming* for more details about FECAP evaluation.

Bits 15:0 **RELOAD[15:0]**: Counter reload value

RELOAD is the value to be loaded in the frequency error counter with each SYNC event. Refer to *Section 7.3.3: Frequency error measurement* for more details about counter behavior.

1. Not available for STM32L431xx devices.

7.6.3 CRS interrupt and status register (CRS_ISR)

Address offset: 0x08

Reset value: 0x0000 0000

31	30	29	28	27	26	25	24	23	22	21	20	19	18	17	16
FECAP[15:0]															
r	r	r	r	r	r	r	r	r	r	r	r	r	r	r	r

15	14	13	12	11	10	9	8	7	6	5	4	3	2	1	0
FEDIR	Res.	Res.	Res.	Res.	TRIMOVF	SYNCMISS	SYNCERR	Res.	Res.	Res.	Res.	ESYNCF	ERRF	SYNCWARNF	SYNCOKF
r					r	r	r					r	r	r	r

Bits 31:16 **FECAP[15:0]**: Frequency error capture

FECAP is the frequency error counter value latched in the time of the last SYNC event. Refer to *Section 7.3.4: Frequency error evaluation and automatic trimming* for more details about FECAP usage.

Bit 15 **FEDIR**: Frequency error direction

FEDIR is the counting direction of the frequency error counter latched in the time of the last SYNC event. It shows whether the actual frequency is below or above the target.

0: Upcounting direction, the actual frequency is above the target.

1: Downcounting direction, the actual frequency is below the target.

Bits 14:11 Reserved, must be kept at reset value.

Bit 10 **TRIMOVF**: Trimming overflow or underflow

This flag is set by hardware when the automatic trimming tries to over- or under-flow the TRIM value. An interrupt is generated if the ERRIE bit is set in the CRS_CR register. It is cleared by software by setting the ERRC bit in the CRS_ICR register.

0: No trimming error signalized

1: Trimming error signalized

Bit 9 **SYNCMISS**: SYNC missed

This flag is set by hardware when the frequency error counter reached value FELIM * 128 and no SYNC was detected, meaning either that a SYNC pulse was missed or that the frequency error is too big (internal frequency too high) to be compensated by adjusting the TRIM value, and that some other action should be taken. At this point, the frequency error counter is stopped (waiting for a next SYNC) and an interrupt is generated if the ERRIE bit is set in the CRS_CR register. It is cleared by software by setting the ERRC bit in the CRS_ICR register.

0: No SYNC missed error signalized

1: SYNC missed error signalized

Bit 8 **SYNCERR**: SYNC error

This flag is set by hardware when the SYNC pulse arrives before the ESYNC event and the measured frequency error is greater than or equal to FELIM * 128. This means that the frequency error is too big (internal frequency too low) to be compensated by adjusting the TRIM value, and that some other action should be taken. An interrupt is generated if the ERRIE bit is set in the CRS_CR register. It is cleared by software by setting the ERRC bit in the CRS_ICR register.

0: No SYNC error signalized

1: SYNC error signalized

Bits 7:4 Reserved, must be kept at reset value.

Bit 3 **ESYNCF**: Expected SYNC flag

This flag is set by hardware when the frequency error counter reached a zero value. An interrupt is generated if the ESYNCIE bit is set in the CRS_CR register. It is cleared by software by setting the ESYNCC bit in the CRS_ICR register.

0: No expected SYNC signalized

1: Expected SYNC signalized

Bit 2 **ERRF**: Error flag

This flag is set by hardware in case of any synchronization or trimming error. It is the logical OR of the TRIMOVF, SYNCMISS and SYNCERR bits. An interrupt is generated if the ERRIE bit is set in the CRS_CR register. It is cleared by software in reaction to setting the ERRC bit in the CRS_ICR register, which clears the TRIMOVF, SYNCMISS and SYNCERR bits.

0: No synchronization or trimming error signalized

1: Synchronization or trimming error signalized

Bit 1 **SYNCWARNF**: SYNC warning flag

This flag is set by hardware when the measured frequency error is greater than or equal to FELIM * 3, but smaller than FELIM * 128. This means that to compensate the frequency error, the TRIM value must be adjusted by two steps or more. An interrupt is generated if the SYNCWARNIE bit is set in the CRS_CR register. It is cleared by software by setting the SYNCWARNC bit in the CRS_ICR register.

0: No SYNC warning signalized

1: SYNC warning signalized

Bit 0 **SYNCOKF**: SYNC event OK flag

This flag is set by hardware when the measured frequency error is smaller than FELIM * 3. This means that either no adjustment of the TRIM value is needed or that an adjustment by one trimming step is enough to compensate the frequency error. An interrupt is generated if the SYNCOKIE bit is set in the CRS_CR register. It is cleared by software by setting the SYNCOKC bit in the CRS_ICR register.

0: No SYNC event OK signalized

1: SYNC event OK signalized

7.6.4 CRS interrupt flag clear register (CRS_ICR)

Address offset: 0x0C

Reset value: 0x0000 0000

31	30	29	28	27	26	25	24	23	22	21	20	19	18	17	16
Res.	Res.	Res.	Res.	Res.	Res.	Res.	Res.	Res.	Res.	Res.	Res.	Res.	Res.	Res.	Res.

15	14	13	12	11	10	9	8	7	6	5	4	3	2	1	0
Res.	Res.	Res.	Res.	Res.	Res.	Res.	Res.	Res.	Res.	Res.	Res.	ESYNCC	ERRC	SYNCWARNC	SYNCOKC
												rw	rw	rw	rw

Bits 31:4 Reserved, must be kept at reset value

Bit 3 **ESYNCC**: Expected SYNC clear flag

Writing 1 to this bit clears the ESYNCF flag in the CRS_ISR register.

Bit 2 **ERRC**: Error clear flag

Writing 1 to this bit clears TRIMOVF, SYNCMISS and SYNCERR bits and consequently also the ERRF flag in the CRS_ISR register.

Bit 1 **SYNCWARNC**: SYNC warning clear flag

Writing 1 to this bit clears the SYNCWARNF flag in the CRS_ISR register.

Bit 0 **SYNCOKC**: SYNC event OK clear flag

Writing 1 to this bit clears the SYNCOKF flag in the CRS_ISR register.

7.6.5 CRS register map

Table 34. CRS register map and reset values

Offset	Register	31	30	29	28	27	26	25	24	23	22	21	20	19	18	17	16	15	14	13	12	11	10	9	8	7	6	5	4	3	2	1	0
0x00	**CRS_CR**	Res.	Res.	Res.	Res.	Res.	Res.	Res.	Res.	Res.	Res.	Res.	Res.	Res.	Res.	Res.	Res.	Res.	Res.	TRIM[5:0]						SWSYNC	AUTOTRIMEN	CEN	Res.	ESYNCIE	ERRIE	SYNCWARNIE	SYNCOKIE
	Reset value																			1	0	0	0	0	0		0	0	0	0	0	0	0
0x04	**CRS_CFGR**	SYNCPOL	Res.	SYNC SRC [1:0]		Res.	SYNC DIV [2:0]			FELIM[7:0]								RELOAD[15:0]															
	Reset value	0		1	0		0	0	0	0	0	1	0	0	0	1	0	1	0	1	1	1	0	1	1	0	1	1	1	1	1	1	1
0x08	**CRS_ISR**	FECAP[15:0]																FEDIR	Res.	Res.	Res.	Res.	TRIMOVF	SYNCMISS	SYNCERR	Res.	Res.	Res.	Res.	ESYNCF	ERRF	SYNCWARNF	SYNCOKF
	Reset value	0	0	0	0	0	0	0	0	0	0	0	0	0	0	0	0	0					0	0	0					0	0	0	0
0x0C	**CRS_ICR**	Res.	Res.	Res.	Res.	Res.	Res.	Res.	Res.	Res.	Res.	Res.	Res.	Res.	Res.	Res.	Res.	Res.	Res.	Res.	Res.	Res.	Res.	Res.	Res.	Res.	Res.	Res.	Res.	ESYNCC	ERRC	SYNCWARNC	SYNCOKC
	Reset value																													0	0	0	0

Refer to *Section 2.2.2 on page 62* for the register boundary addresses.

8 General-purpose I/Os (GPIO)

8.1 Introduction

Each general-purpose I/O port has four 32-bit configuration registers (GPIOx_MODER, GPIOx_OTYPER, GPIOx_OSPEEDR and GPIOx_PUPDR), two 32-bit data registers (GPIOx_IDR and GPIOx_ODR) and a 32-bit set/reset register (GPIOx_BSRR). In addition all GPIOs have a 32-bit locking register (GPIOx_LCKR) and two 32-bit alternate function selection registers (GPIOx_AFRH and GPIOx_AFRL).

8.2 GPIO main features

- Output states: push-pull or open drain + pull-up/down
- Output data from output data register (GPIOx_ODR) or peripheral (alternate function output)
- Speed selection for each I/O
- Input states: floating, pull-up/down, analog
- Input data to input data register (GPIOx_IDR) or peripheral (alternate function input)
- Bit set and reset register (GPIOx_ BSRR) for bitwise write access to GPIOx_ODR
- Locking mechanism (GPIOx_LCKR) provided to freeze the I/O port configurations
- Analog function
- Alternate function selection registers
- Fast toggle capable of changing every two clock cycles
- Highly flexible pin multiplexing allows the use of I/O pins as GPIOs or as one of several peripheral functions

8.3 GPIO functional description

Subject to the specific hardware characteristics of each I/O port listed in the datasheet, each port bit of the general-purpose I/O (GPIO) ports can be individually configured by software in several modes:

- Input floating
- Input pull-up
- Input-pull-down
- Analog
- Output open-drain with pull-up or pull-down capability
- Output push-pull with pull-up or pull-down capability
- Alternate function push-pull with pull-up or pull-down capability
- Alternate function open-drain with pull-up or pull-down capability

Each I/O port bit is freely programmable, however the I/O port registers have to be accessed as 32-bit words, half-words or bytes. The purpose of the GPIOx_BSRR and GPIOx_BRR registers is to allow atomic read/modify accesses to any of the GPIOx_ODR registers. In this way, there is no risk of an IRQ occurring between the read and the modify access.

Figure 18 and *Figure 19* show the basic structures of a standard and a 5 V tolerant I/O port bit, respectively. *Table 35* gives the possible port bit configurations.

Figure 18. Basic structure of an I/O port bit

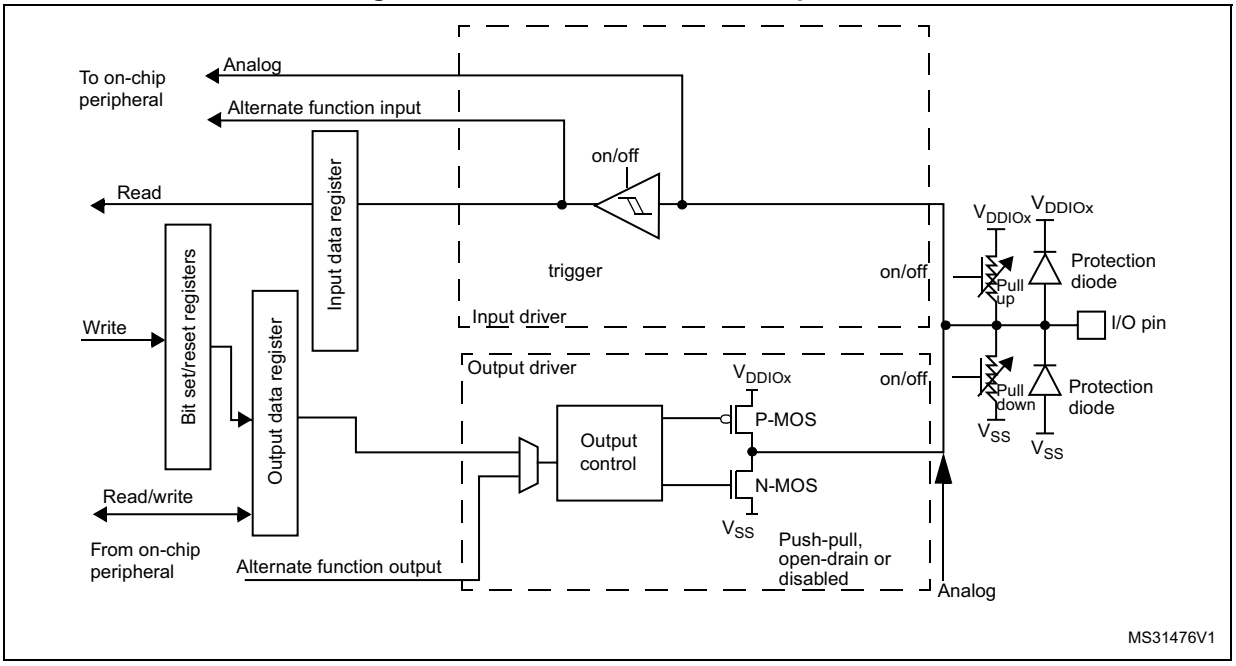

Figure 19. Basic structure of a five-volt tolerant I/O port bit

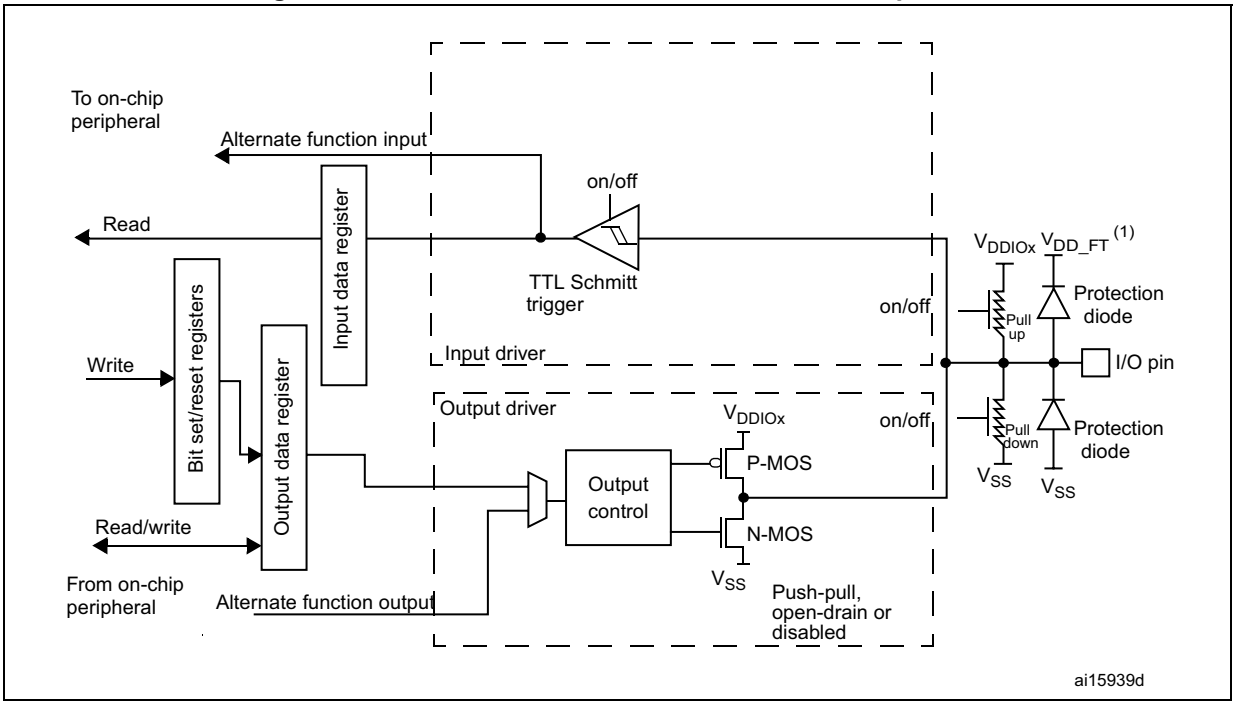

1. V_{DD_FT} is a potential specific to five-volt tolerant I/Os and different from V_{DD}.

Table 35. Port bit configuration table[1]

MODE(i) [1:0]	OTYPER(i)	OSPEED(i) [1:0]		PUPD(i) [1:0]		I/O configuration	
01	0	SPEED [1:0]		0	0	GP output	PP
	0			0	1	GP output	PP + PU
	0			1	0	GP output	PP + PD
	0			1	1	Reserved	
	1			0	0	GP output	OD
	1			0	1	GP output	OD + PU
	1			1	0	GP output	OD + PD
	1			1	1	Reserved (GP output OD)	
10	0	SPEED [1:0]		0	0	AF	PP
	0			0	1	AF	PP + PU
	0			1	0	AF	PP + PD
	0			1	1	Reserved	
	1			0	0	AF	OD
	1			0	1	AF	OD + PU
	1			1	0	AF	OD + PD
	1			1	1	Reserved	
00	x	x	x	0	0	Input	Floating
	x	x	x	0	1	Input	PU
	x	x	x	1	0	Input	PD
	x	x	x	1	1	Reserved (input floating)	
11	x	x	x	0	0	Input/output	Analog
	x	x	x	0	1	Reserved	
	x	x	x	1	0		
	x	x	x	1	1		

1. GP = general-purpose, PP = push-pull, PU = pull-up, PD = pull-down, OD = open-drain, AF = alternate function.

8.3.1 General-purpose I/O (GPIO)

During and just after reset, the alternate functions are not active and most of the I/O ports are configured in analog mode.

The debug pins are in AF pull-up/pull-down after reset:

- PA15: JTDI in pull-up
- PA14: JTCK/SWCLK in pull-down
- PA13: JTMS/SWDAT in pull-up
- PB4: NJTRST in pull-up
- PB3: JTDO in floating stateno pull-up/pull-down

PH3/BOOT0 is in input mode during the reset until at least the end of the option byte loading phase. See *Section 8.3.15: Using PH3 as GPIO*.

When the pin is configured as output, the value written to the output data register (GPIOx_ODR) is output on the I/O pin. It is possible to use the output driver in push-pull mode or open-drain mode (only the low level is driven, high level is HI-Z).

The input data register (GPIOx_IDR) captures the data present on the I/O pin at every AHB clock cycle.

All GPIO pins have weak internal pull-up and pull-down resistors, which can be activated or not depending on the value in the GPIOx_PUPDR register.

8.3.2 I/O pin alternate function multiplexer and mapping

The device I/O pins are connected to on-board peripherals/modules through a multiplexer that allows only one peripheral alternate function (AF) connected to an I/O pin at a time. In this way, there can be no conflict between peripherals available on the same I/O pin.

Each I/O pin (except PH3) has a multiplexer with up to sixteen alternate function inputs (AF0 to AF15) that can be configured through the GPIOx_AFRL (for pin 0 to 7) and GPIOx_AFRH (for pin 8 to 15) registers:

- After reset the multiplexer selection is alternate function 0 (AF0). The I/Os are configured in alternate function mode through GPIOx_MODER register.
- The specific alternate function assignments for each pin are detailed in the device datasheet.

In addition to this flexible I/O multiplexing architecture, each peripheral has alternate functions mapped onto different I/O pins to optimize the number of peripherals available in smaller packages.

To use an I/O in a given configuration, the user has to proceed as follows:

- **Debug function:** after each device reset these pins are assigned as alternate function pins immediately usable by the debugger host
- **GPIO:** configure the desired I/O as output, input or analog in the GPIOx_MODER register.
- **Peripheral alternate function:**
  - Connect the I/O to the desired AFx in one of the GPIOx_AFRL or GPIOx_AFRH register.
  - Select the type, pull-up/pull-down and output speed via the GPIOx_OTYPER, GPIOx_PUPDR and GPIOx_OSPEEDER registers, respectively.

  - Configure the desired I/O as an alternate function in the GPIOx_MODER register.
- **Additional functions:**
  - For the ADC, DAC, OPAMP, and COMP, configure the desired I/O in analog mode in the GPIOx_MODER register and configure the required function in the ADC, DAC, OPAMP, and COMP registers.
  - For the additional functions like RTC, WKUPx and oscillators, configure the required function in the related RTC, PWR and RCC registers. These functions have priority over the configuration in the standard GPIO registers.

Please refer to the “Alternate function mapping” table in the device datasheet for the detailed mapping of the alternate function I/O pins.

8.3.3 I/O port control registers

Each of the GPIO ports has four 32-bit memory-mapped control registers (GPIOx_MODER, GPIOx_OTYPER, GPIOx_OSPEEDR, GPIOx_PUPDR) to configure up to 16 I/Os. The GPIOx_MODER register is used to select the I/O mode (input, output, AF, analog). The GPIOx_OTYPER and GPIOx_OSPEEDR registers are used to select the output type (push-pull or open-drain) and speed. The GPIOx_PUPDR register is used to select the pull-up/pull-down whatever the I/O direction.

8.3.4 I/O port data registers

Each GPIO has two 16-bit memory-mapped data registers: input and output data registers (GPIOx_IDR and GPIOx_ODR). GPIOx_ODR stores the data to be output, it is read/write accessible. The data input through the I/O are stored into the input data register (GPIOx_IDR), a read-only register.

See *Section 8.4.5: GPIO port input data register (GPIOx_IDR) (x = A..E and H)* and *Section 8.4.6: GPIO port output data register (GPIOx_ODR) (x = A..E and H)* for the register descriptions.

8.3.5 I/O data bitwise handling

The bit set reset register (GPIOx_BSRR) is a 32-bit register which allows the application to set and reset each individual bit in the output data register (GPIOx_ODR). The bit set reset register has twice the size of GPIOx_ODR.

To each bit in GPIOx_ODR, correspond two control bits in GPIOx_BSRR: BS(i) and BR(i). When written to 1, bit BS(i) **sets** the corresponding ODR(i) bit. When written to 1, bit BR(i) **resets** the ODR(i) corresponding bit.

Writing any bit to 0 in GPIOx_BSRR does not have any effect on the corresponding bit in GPIOx_ODR. If there is an attempt to both set and reset a bit in GPIOx_BSRR, the set action takes priority.

Using the GPIOx_BSRR register to change the values of individual bits in GPIOx_ODR is a “one-shot” effect that does not lock the GPIOx_ODR bits. The GPIOx_ODR bits can always be accessed directly. The GPIOx_BSRR register provides a way of performing atomic bitwise handling.

There is no need for the software to disable interrupts when programming the GPIOx_ODR at bit level: it is possible to modify one or more bits in a single atomic AHB write access.

8.3.6 GPIO locking mechanism

It is possible to freeze the GPIO control registers by applying a specific write sequence to the GPIOx_LCKR register. The frozen registers are GPIOx_MODER, GPIOx_OTYPER, GPIOx_OSPEEDR, GPIOx_PUPDR, GPIOx_AFRL and GPIOx_AFRH.

To write the GPIOx_LCKR register, a specific write / read sequence has to be applied. When the right LOCK sequence is applied to bit 16 in this register, the value of LCKR[15:0] is used to lock the configuration of the I/Os (during the write sequence the LCKR[15:0] value must be the same). When the LOCK sequence has been applied to a port bit, the value of the port bit can no longer be modified until the next MCU reset or peripheral reset. Each GPIOx_LCKR bit freezes the corresponding bit in the control registers (GPIOx_MODER, GPIOx_OTYPER, GPIOx_OSPEEDR, GPIOx_PUPDR, GPIOx_AFRL and GPIOx_AFRH.

The LOCK sequence (refer to *Section 8.4.8: GPIO port configuration lock register (GPIOx_LCKR) (x = A..E and H)*) can only be performed using a word (32-bit long) access to the GPIOx_LCKR register due to the fact that GPIOx_LCKR bit 16 has to be set at the same time as the [15:0] bits.

For more details please refer to LCKR register description in *Section 8.4.8: GPIO port configuration lock register (GPIOx_LCKR) (x = A..E and H)*.

8.3.7 I/O alternate function input/output

Two registers are provided to select one of the alternate function inputs/outputs available for each I/O. With these registers, the user can connect an alternate function to some other pin as required by the application.

This means that a number of possible peripheral functions are multiplexed on each GPIO using the GPIOx_AFRL and GPIOx_AFRH alternate function registers. The application can thus select any one of the possible functions for each I/O. The AF selection signal being common to the alternate function input and alternate function output, a single channel is selected for the alternate function input/output of a given I/O.

To know which functions are multiplexed on each GPIO pin, refer to the device datasheet.

No alternate function is mapped on PH3.

8.3.8 External interrupt/wakeup lines

All ports have external interrupt capability. To use external interrupt lines, the port must be configured in input mode.*Section 13: Extended interrupts and events controller (EXTI)* and to *Section 13.3.2: Wakeup event management*.

8.3.9 Input configuration

When the I/O port is programmed as input:

- The output buffer is disabled
- The Schmitt trigger input is activated
- The pull-up and pull-down resistors are activated depending on the value in the GPIOx_PUPDR register
- The data present on the I/O pin are sampled into the input data register every AHB clock cycle
- A read access to the input data register provides the I/O state

Figure 20 shows the input configuration of the I/O port bit.

Figure 20. Input floating/pull up/pull down configurations

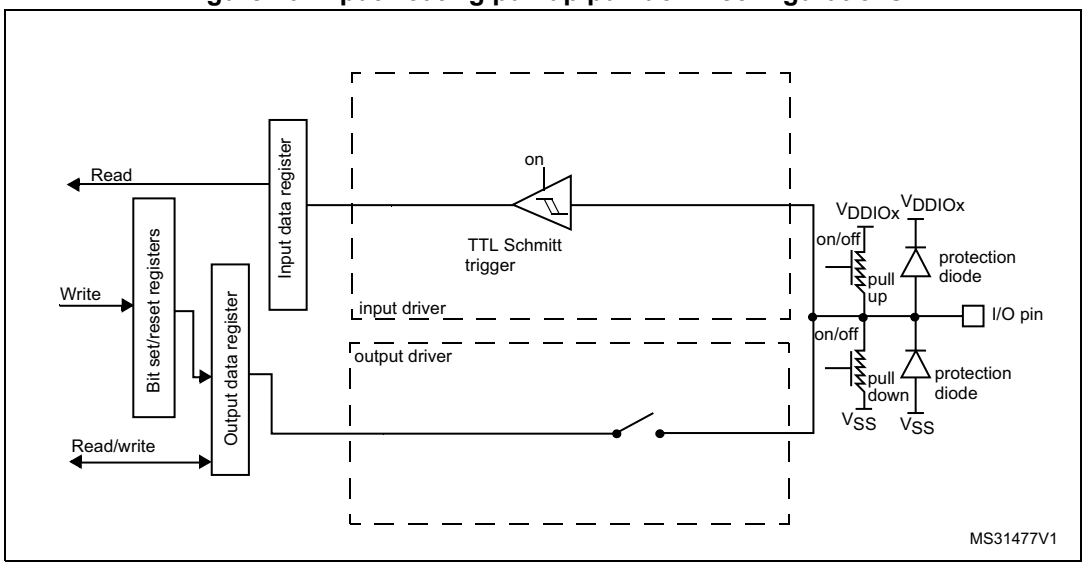

8.3.10 Output configuration

When the I/O port is programmed as output:

- The output buffer is enabled:
  - Open drain mode: A “0” in the Output register activates the N-MOS whereas a “1” in the Output register leaves the port in Hi-Z (the P-MOS is never activated)
  - Push-pull mode: A “0” in the Output register activates the N-MOS whereas a “1” in the Output register activates the P-MOS
- The Schmitt trigger input is activated
- The pull-up and pull-down resistors are activated depending on the value in the GPIOx_PUPDR register
- The data present on the I/O pin are sampled into the input data register every AHB clock cycle
- A read access to the input data register gets the I/O state
- A read access to the output data register gets the last written value

Figure 21 shows the output configuration of the I/O port bit.

Figure 21. Output configuration

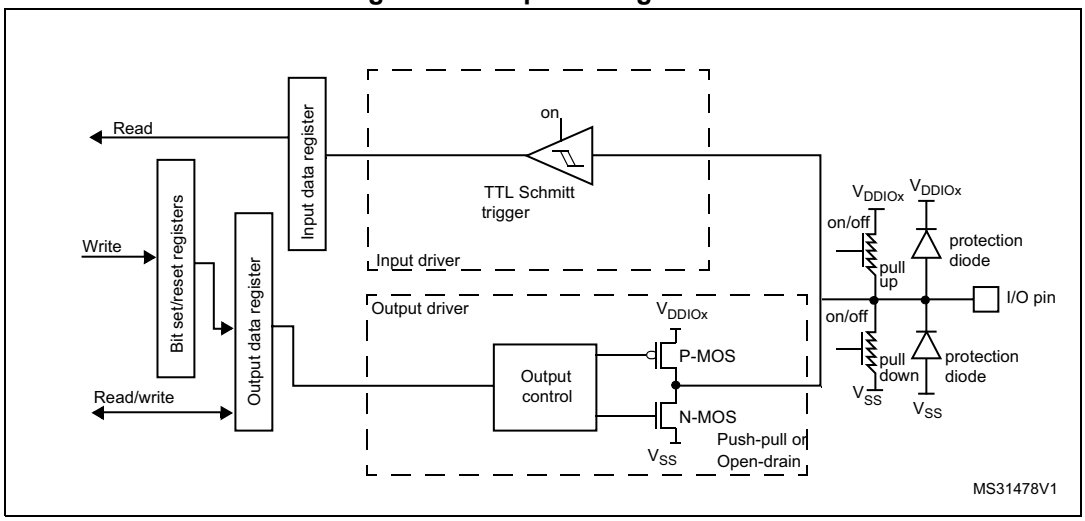

8.3.11 Alternate function configuration

When the I/O port is programmed as alternate function:

- The output buffer can be configured in open-drain or push-pull mode
- The output buffer is driven by the signals coming from the peripheral (transmitter enable and data)
- The Schmitt trigger input is activated
- The weak pull-up and pull-down resistors are activated or not depending on the value in the GPIOx_PUPDR register
- The data present on the I/O pin are sampled into the input data register every AHB clock cycle
- A read access to the input data register gets the I/O state

Note: The alternate function configuration described above is not applied when the selected alternate function is a LCD[a] function or a SWPMI_IO. In this case, the I/O, programmed as an alternate function output, is configured as described in the analog configuration.

Figure 22 shows the Alternate function configuration of the I/O port bit.

a. Not available for STM32L431xx devices.

Figure 22. Alternate function configuration

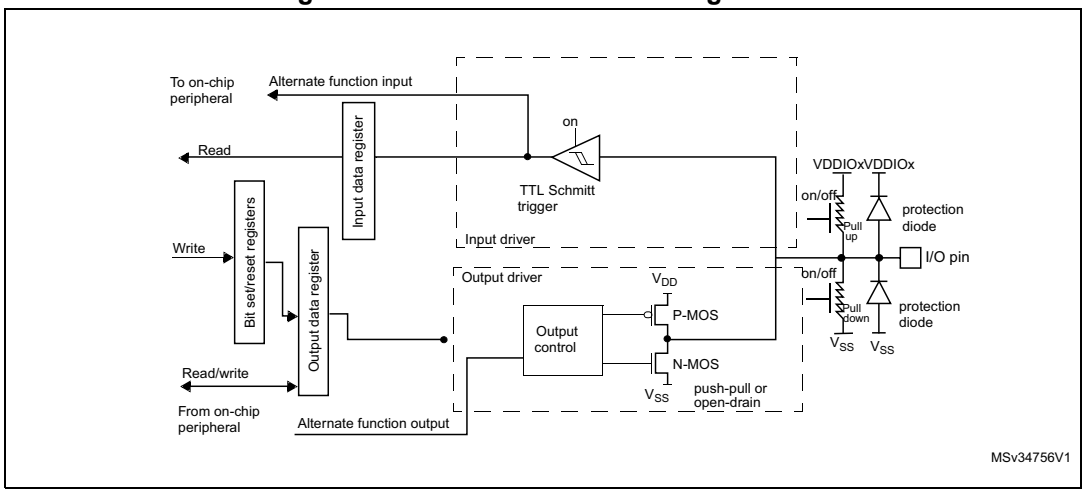

8.3.12 Analog configuration

When the I/O port is programmed as analog configuration:

- The output buffer is disabled
- The Schmitt trigger input is deactivated, providing zero consumption for every analog value of the I/O pin. The output of the Schmitt trigger is forced to a constant value (0).
- The weak pull-up and pull-down resistors are disabled by hardware
- Read access to the input data register gets the value “0”

Figure 23 shows the high-impedance, analog-input configuration of the I/O port bit.

Figure 23. High impedance-analog configuration

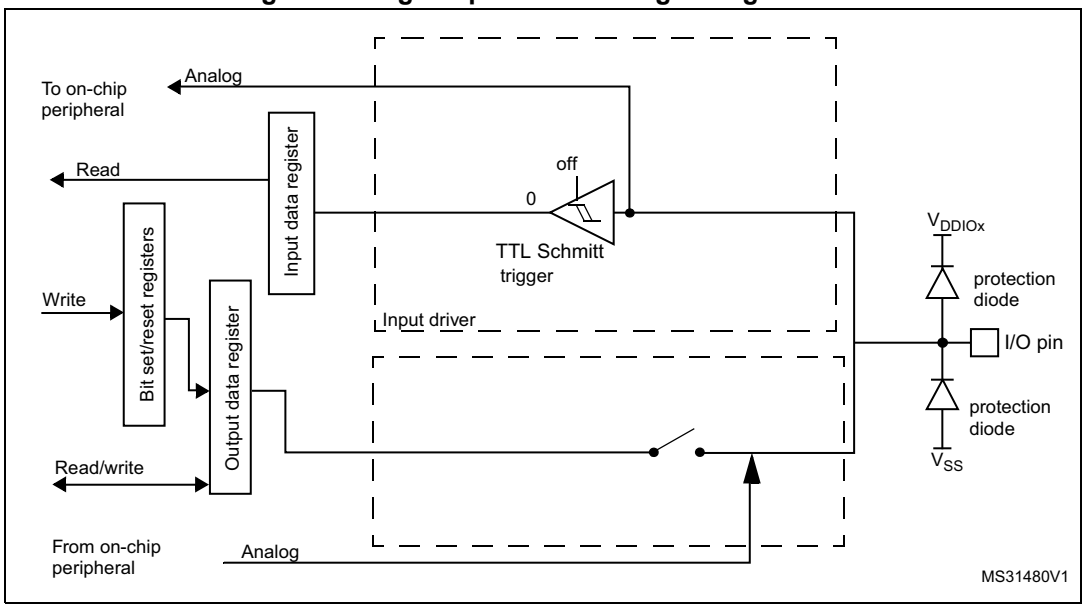

8.3.13 Using the HSE or LSE oscillator pins as GPIOs

When the HSE or LSE oscillator is switched OFF (default state after reset), the related oscillator pins can be used as normal GPIOs.

When the HSE or LSE oscillator is switched ON (by setting the HSEON or LSEON bit in the RCC_CSR register) the oscillator takes control of its associated pins and the GPIO configuration of these pins has no effect.

When the oscillator is configured in a user external clock mode, only the pin is reserved for clock input and the OSC_OUT or OSC32_OUT pin can still be used as normal GPIO.

8.3.14 Using the GPIO pins in the RTC supply domain

The PC13/PC14/PC15 GPIO functionality is lost when the core supply domain is powered off (when the device enters Standby mode). In this case, if their GPIO configuration is not bypassed by the RTC configuration, these pins are set in an analog input mode.

For details about I/O control by the RTC, refer to *Section 33.3: RTC functional description on page 920*.

8.3.15 Using PH3 as GPIO

PH3 may be used as boot pin (BOOT0) or as a GPIO. Depending on the nSWBOOT0 bit in the user option byte, it switches from the input mode to the analog input mode:

- After the option byte loading phase if nSWBOOT0 = 1.
- After reset if nSWBOOT0 = 0.

8.4 GPIO registers

This section gives a detailed description of the GPIO registers.

For a summary of register bits, register address offsets and reset values, refer to *Table 36*.

The peripheral registers can be written in word, half word or byte mode.

8.4.1 GPIO port mode register (GPIOx_MODER) (x =A..E and H)

Address offset:0x00

Reset values:

- 0xABFF FFFF for port A
- 0xFFFF FEBF for port B
- 0xFFFF FFFF for ports C..E
- 0x0000 000F for port H

31	30	29	28	27	26	25	24	23	22	21	20	19	18	17	16
MODE15[1:0]		MODE14[1:0]		MODE13[1:0]		MODE12[1:0]		MODE11[1:0]		MODE10[1:0]		MODE9[1:0]		MODE8[1:0]	
rw	rw	rw	rw	rw	rw	rw	rw	rw	rw	rw	rw	rw	rw	rw	rw
15	14	13	12	11	10	9	8	7	6	5	4	3	2	1	0
MODE7[1:0]		MODE6[1:0]		MODE5[1:0]		MODE4[1:0]		MODE3[1:0]		MODE2[1:0]		MODE1[1:0]		MODE0[1:0]	
rw	rw	rw	rw	rw	rw	rw	rw	rw	rw	rw	rw	rw	rw	rw	rw

Bits 2y+1:2y **MODEy[1:0]:** Port x configuration bits (y = 0..15)
These bits are written by software to configure the I/O mode.
00: Input mode
01: General purpose output mode
10: Alternate function mode
11: Analog mode (reset state)

8.4.2 GPIO port output type register (GPIOx_OTYPER) (x = A..E and H)

Address offset: 0x04

Reset value: 0x0000 0000

31	30	29	28	27	26	25	24	23	22	21	20	19	18	17	16
Res.	Res.	Res.	Res.	Res.	Res.	Res.	Res.	Res.	Res.	Res.	Res.	Res.	Res.	Res.	Res.
15	14	13	12	11	10	9	8	7	6	5	4	3	2	1	0
OT15	OT14	OT13	OT12	OT11	OT10	OT9	OT8	OT7	OT6	OT5	OT4	OT3	OT2	OT1	OT0
rw	rw	rw	rw	rw	rw	rw	rw	rw	rw	rw	rw	rw	rw	rw	rw

Bits 31:16 Reserved, must be kept at reset value.

Bits 15:0 **OTy:** Port x configuration bits (y = 0..15)
These bits are written by software to configure the I/O output type.
0: Output push-pull (reset state)
1: Output open-drain

8.4.3 GPIO port output speed register (GPIOx_OSPEEDR) (x = A..E and H)

Address offset: 0x08

Reset value:

- 0x0C00 0000 for port A
- 0x0000 0000 for the other ports

31	30	29	28	27	26	25	24	23	22	21	20	19	18	17	16
OSPEED15 [1:0]		OSPEED14 [1:0]		OSPEED13 [1:0]		OSPEED12 [1:0]		OSPEED11 [1:0]		OSPEED10 [1:0]		OSPEED9 [1:0]		OSPEED8 [1:0]	
rw	rw	rw	rw	rw	rw	rw	rw	rw	rw	rw	rw	rw	rw	rw	rw

15	14	13	12	11	10	9	8	7	6	5	4	3	2	1	0
OSPEED7 [1:0]		OSPEED6 [1:0]		OSPEED5 [1:0]		OSPEED4 [1:0]		OSPEED3 [1:0]		OSPEED2 [1:0]		OSPEED1 [1:0]		OSPEED0 [1:0]	
rw	rw	rw	rw	rw	rw	rw	rw	rw	rw	rw	rw	rw	rw	rw	rw

Bits 2y+1:2y **OSPEEDy[1:0]**: Port x configuration bits (y = 0..15)

These bits are written by software to configure the I/O output speed.

00: Low speed
01: Medium speed
10: High speed
11: Very high speed

Note: Refer to the device datasheet for the frequency specifications and the power supply and load conditions for each speed.

8.4.4 GPIO port pull-up/pull-down register (GPIOx_PUPDR) (x = A..E and H)

Address offset: 0x0C

Reset values:

- 0x6400 0000 for port A
- 0x0000 0100 for port B
- 0x0000 0000 for other ports

31	30	29	28	27	26	25	24	23	22	21	20	19	18	17	16
PUPD15[1:0]		PUPD14[1:0]		PUPD13[1:0]		PUPD12[1:0]		PUPD11[1:0]		PUPD10[1:0]		PUPD9[1:0]		PUPD8[1:0]	
rw	rw	rw	rw	rw	rw	rw	rw	rw	rw	rw	rw	rw	rw	rw	rw

15	14	13	12	11	10	9	8	7	6	5	4	3	2	1	0
PUPD7[1:0]		PUPD6[1:0]		PUPD5[1:0]		PUPD4[1:0]		PUPD3[1:0]		PUPD2[1:0]		PUPD1[1:0]		PUPD0[1:0]	
rw	rw	rw	rw	rw	rw	rw	rw	rw	rw	rw	rw	rw	rw	rw	rw

Bits 2y+1:2y **PUPDy[1:0]:** Port x configuration bits (y = 0..15)

These bits are written by software to configure the I/O pull-up or pull-down

00: No pull-up, pull-down
01: Pull-up
10: Pull-down
11: Reserved

8.4.5 GPIO port input data register (GPIOx_IDR) (x = A..E and H)

Address offset: 0x10

Reset value: 0x0000 XXXX (where X means undefined)

31	30	29	28	27	26	25	24	23	22	21	20	19	18	17	16
Res.	Res.	Res.	Res.	Res.	Res.	Res.	Res.	Res.	Res.	Res.	Res.	Res.	Res.	Res.	Res.
15	14	13	12	11	10	9	8	7	6	5	4	3	2	1	0
ID15	ID14	ID13	ID12	ID11	ID10	ID9	ID8	ID7	ID6	ID5	ID4	ID3	ID2	ID1	ID0
r	r	r	r	r	r	r	r	r	r	r	r	r	r	r	r

Bits 31:16 Reserved, must be kept at reset value.

Bits 15:0 **IDy:** Port input data bit (y = 0..15)
These bits are read-only. They contain the input value of the corresponding I/O port.

8.4.6 GPIO port output data register (GPIOx_ODR) (x = A..E and H)

Address offset: 0x14

Reset value: 0x0000 0000

31	30	29	28	27	26	25	24	23	22	21	20	19	18	17	16
Res.	Res.	Res.	Res.	Res.	Res.	Res.	Res.	Res.	Res.	Res.	Res.	Res.	Res.	Res.	Res.
15	14	13	12	11	10	9	8	7	6	5	4	3	2	1	0
OD15	OD14	OD13	OD12	OD11	OD10	OD9	OD8	OD7	OD6	OD5	OD4	OD3	OD2	OD1	OD0
rw	rw	rw	rw	rw	rw	rw	rw	rw	rw	rw	rw	rw	rw	rw	rw

Bits 31:16 Reserved, must be kept at reset value.

Bits 15:0 **ODy:** Port output data bit (y = 0..15)
These bits can be read and written by software.
Note: For atomic bit set/reset, the OD bits can be individually set and/or reset by writing to the GPIOx_BSRR or GPIOx_BRR registers (x = A..F).

8.4.7 GPIO port bit set/reset register (GPIOx_BSRR) (x = A..E and H)

Address offset: 0x18

Reset value: 0x0000 0000

31	30	29	28	27	26	25	24	23	22	21	20	19	18	17	16
BR15	BR14	BR13	BR12	BR11	BR10	BR9	BR8	BR7	BR6	BR5	BR4	BR3	BR2	BR1	BR0
w	w	w	w	w	w	w	w	w	w	w	w	w	w	w	w
15	14	13	12	11	10	9	8	7	6	5	4	3	2	1	0
BS15	BS14	BS13	BS12	BS11	BS10	BS9	BS8	BS7	BS6	BS5	BS4	BS3	BS2	BS1	BS0
w	w	w	w	w	w	w	w	w	w	w	w	w	w	w	w

Bits 31:16 **BRy:** Port x reset bit y (y = 0..15)

These bits are write-only. A read to these bits returns the value 0x0000.

0: No action on the corresponding ODx bit

1: Resets the corresponding ODx bit

Note: If both BSx and BRx are set, BSx has priority.

Bits 15:0 **BSy:** Port x set bit y (y= 0..15)

These bits are write-only. A read to these bits returns the value 0x0000.

0: No action on the corresponding ODx bit

1: Sets the corresponding ODx bit

8.4.8 GPIO port configuration lock register (GPIOx_LCKR) (x = A..E and H)

This register is used to lock the configuration of the port bits when a correct write sequence is applied to bit 16 (LCKK). The value of bits [15:0] is used to lock the configuration of the GPIO. During the write sequence, the value of LCKR[15:0] must not change. When the LOCK sequence has been applied on a port bit, the value of this port bit can no longer be modified until the next MCU reset or peripheral reset.

Note: A specific write sequence is used to write to the GPIOx_LCKR register. Only word access (32-bit long) is allowed during this locking sequence.

Each lock bit freezes a specific configuration register (control and alternate function registers).

Address offset: 0x1C

Reset value: 0x0000 0000

31	30	29	28	27	26	25	24	23	22	21	20	19	18	17	16
Res.	Res.	Res.	Res.	Res.	Res.	Res.	Res.	Res.	Res.	Res.	Res.	Res.	Res.	Res.	LCKK
															rw
15	14	13	12	11	10	9	8	7	6	5	4	3	2	1	0
LCK15	LCK14	LCK13	LCK12	LCK11	LCK10	LCK9	LCK8	LCK7	LCK6	LCK5	LCK4	LCK3	LCK2	LCK1	LCK0
rw	rw	rw	rw	rw	rw	rw	rw	rw	rw	rw	rw	rw	rw	rw	rw

Bits 31:17 Reserved, must be kept at reset value.

Bit 16 **LCKK:** Lock key

This bit can be read any time. It can only be modified using the lock key write sequence.

0: Port configuration lock key not active

1: Port configuration lock key active. The GPIOx_LCKR register is locked until the next MCU reset or peripheral reset.

LOCK key write sequence:

WR LCKR[16] = ‘1’ + LCKR[15:0]

WR LCKR[16] = ‘0’ + LCKR[15:0]

WR LCKR[16] = ‘1’ + LCKR[15:0]

RD LCKR

RD LCKR[16] = ‘1’ (this read operation is optional but it confirms that the lock is active)

Note: During the LOCK key write sequence, the value of LCK[15:0] must not change.

Any error in the lock sequence aborts the lock.

After the first lock sequence on any bit of the port, any read access on the LCKK bit will return ‘1’ until the next MCU reset or peripheral reset.

Bits 15:0 **LCKy:** Port x lock bit y (y= 0..15)

These bits are read/write but can only be written when the LCKK bit is ‘0.

0: Port configuration not locked

1: Port configuration locked

8.4.9 GPIO alternate function low register (GPIOx_AFRL) (x = A..E and H)

Address offset: 0x20

Reset value: 0x0000 0000

31	30	29	28	27	26	25	24	23	22	21	20	19	18	17	16
AFSEL7[3:0]				AFSEL6[3:0]				AFSEL5[3:0]				AFSEL4[3:0]			
rw	rw	rw	rw	rw	rw	rw	rw	rw	rw	rw	rw	rw	rw	rw	rw
15	14	13	12	11	10	9	8	7	6	5	4	3	2	1	0
AFSEL3[3:0]				AFSEL2[3:0]				AFSEL1[3:0]				AFSEL0[3:0]			
rw	rw	rw	rw	rw	rw	rw	rw	rw	rw	rw	rw	rw	rw	rw	rw

Bits 31:0 **AFSELy[3:0]:** Alternate function selection for port x pin y (y = 0..7)

These bits are written by software to configure alternate function I/Os

AFSELy selection:

0000: AF0
0001: AF1
0010: AF2
0011: AF3
0100: AF4
0101: AF5
0110: AF6
0111: AF7
1000: AF8
1001: AF9
1010: AF10
1011: AF11
1100: AF12
1101: AF13
1110: AF14
1111: AF15

8.4.10 GPIO alternate function high register (GPIOx_AFRH) (x = A..E and H)

Address offset: 0x24

Reset value: 0x0000 0000

31	30	29	28	27	26	25	24	23	22	21	20	19	18	17	16
AFSEL15[3:0]				AFSEL14[3:0]				AFSEL13[3:0]				AFSEL12[3:0]			
rw	rw	rw	rw	rw	rw	rw	rw	rw	rw	rw	rw	rw	rw	rw	rw
15	14	13	12	11	10	9	8	7	6	5	4	3	2	1	0
AFSEL11[3:0]				AFSEL10[3:0]				AFSEL9[3:0]				AFSEL8[3:0]			
rw	rw	rw	rw	rw	rw	rw	rw	rw	rw	rw	rw	rw	rw	rw	rw

Bits 31:0 **AFSELy[3:0]:** Alternate function selection for port x pin y (y = 8..15)
These bits are written by software to configure alternate function I/Os

AFSELy selection:

0000: AF0
0001: AF1
0010: AF2
0011: AF3
0100: AF4
0101: AF5
0110: AF6
0111: AF7
1000: AF8
1001: AF9
1010: AF10
1011: AF11
1100: AF12
1101: AF13
1110: AF14
1111: AF15

8.4.11 GPIO port bit reset register (GPIOx_BRR) (x =A..E and H)

Address offset: 0x28
Reset value: 0x0000 0000

31	30	29	28	27	26	25	24	23	22	21	20	19	18	17	16
Res.	Res.	Res.	Res.	Res.	Res.	Res.	Res.	Res.	Res.	Res.	Res.	Res.	Res.	Res.	Res.
15	14	13	12	11	10	9	8	7	6	5	4	3	2	1	0
BR15	BR14	BR13	BR12	BR11	BR10	BR9	BR8	BR7	BR6	BR5	BR4	BR3	BR2	BR1	BR0
w	w	w	w	w	w	w	w	w	w	w	w	w	w	w	w

Bits 31:16 Reserved

Bits 15:0 **BRy:** Port x Reset bit y (y= 0..15)
These bits are write-only. A read to these bits returns the value 0x0000
0: No action on the corresponding ODx bit
1: Reset the corresponding ODx bit

8.4.12 GPIO register map

The following table gives the GPIO register map and reset values.

Table 36. GPIO register map and reset values

Offset	Register	31	30	29	28	27	26	25	24	23	22	21	20	19	18	17	16	15	14	13	12	11	10	9	8	7	6	5	4	3	2	1	0
0x00	**GPIOA_MODER**	MODE15[1:0]		MODE14[1:0]		MODE13[1:0]		MODE12[1:0]		MODE11[1:0]		MODE10[1:0]		MODE9[1:0]		MODE8[1:0]		MODE7[1:0]		MODE6[1:0]		MODE5[1:0]		MODE4[1:0]		MODE3[1:0]		MODE2[1:0]		MODE1[1:0]		MODE0[1:0]	
	Reset value	1	0	1	0	1	0	1	1	1	1	1	1	1	1	1	1	1	1	1	1	1	1	1	1	1	1	1	1	1	1	1	1
0x00	**GPIOB_MODER**	MODER15[1:0]		MODER14[1:0]		MODER13[1:0]		MODER12[1:0]		MODER11[1:0]		MODER10[1:0]		MODER9[1:0]		MODER8[1:0]		MODER7[1:0]		MODER6[1:0]		MODER5[1:0]		MODER4[1:0]		MODER3[1:0]		MODER2[1:0]		MODER1[1:0]		MODER0[1:0]	
	Reset value	1	1	1	1	1	1	1	1	1	1	1	1	1	1	1	1	1	1	1	1	1	1	1	0	1	0	1	1	1	1	1	1
0x00	**GPIOx_MODER** (where x = **C..E,H**)	MODE15[1:0]		MODE14[1:0]		MODE13[1:0]		MODE12[1:0]		MODE11[1:0]		MODE10[1:0]		MODE9[1:0]		MODE8[1:0]		MODE7[1:0]		MODE6[1:0]		MODE5[1:0]		MODE4[1:0]		MODE3[1:0]		MODE2[1:0]		MODE1[1:0]		MODE0[1:0]	
	Reset value	1	1	1	1	1	1	1	1	1	1	1	1	1	1	1	1	1	1	1	1	1	1	1	1	1	1	1	1	1	1	1	1
0x04	**GPIOx_OTYPER** (where x = **A..E,H**)	Res.	Res.	Res.	Res.	Res.	Res.	Res.	Res.	Res.	Res.	Res.	Res.	Res.	Res.	Res.	Res.	OT15	OT14	OT13	OT12	OT11	OT10	OT9	OT8	OT7	OT6	OT5	OT4	OT3	OT2	OT1	OT0
	Reset value																	0	0	0	0	0	0	0	0	0	0	0	0	0	0	0	0
0x08	**GPIOA_OSPEEDR**	OSPEED15[1:0]		OSPEED14[1:0]		OSPEED13[1:0]		OSPEED12[1:0]		OSPEED11[1:0]		OSPEED10[1:0]		OSPEED9[1:0]		OSPEED8[1:0]		OSPEED7[1:0]		OSPEED6[1:0]		OSPEED5[1:0]		OSPEED4[1:0]		OSPEED3[1:0]		OSPEED2[1:0]		OSPEED1[1:0]		OSPEED0[1:0]	
	Reset value	0	0	0	0	1	1	0	0	0	0	0	0	0	0	0	0	0	0	0	0	0	0	0	0	0	0	0	0	0	0	0	0
0x08	**GPIOx_OSPEEDR** (where x = **B..E,H**)	OSPEED15[1:0]		OSPEED14[1:0]		OSPEED13[1:0]		OSPEED12[1:0]		OSPEED11[1:0]		OSPEED10[1:0]		OSPEED9[1:0]		OSPEED8[1:0]		OSPEED7[1:0]		OSPEED6[1:0]		OSPEED5[1:0]		OSPEED4[1:0]		OSPEED3[1:0]		OSPEED2[1:0]		OSPEED1[1:0]		OSPEED0[1:0]	
	Reset value	0	0	0	0	0	0	0	0	0	0	0	0	0	0	0	0	0	0	0	0	0	0	0	0	0	0	0	0	0	0	0	0
0x0C	**GPIOA_PUPDR**	PUPD15[1:0]		PUPD14[1:0]		PUPD13[1:0]		PUPD12[1:0]		PUPD11[1:0]		PUPD10[1:0]		PUPD9[1:0]		PUPD8[1:0]		PUPD7[1:0]		PUPD6[1:0]		PUPD5[1:0]		PUPD4[1:0]		PUPD3[1:0]		PUPD2[1:0]		PUPD1[1:0]		PUPD0[1:0]	
	Reset value	0	1	1	0	0	1	0	0	0	0	0	0	0	0	0	0	0	0	0	0	0	0	0	0	0	0	0	0	0	0	0	0
0x0C	**GPIOB_PUPDR**	PUPD15[1:0]		PUPD14[1:0]		PUPD13[1:0]		PUPD12[1:0]		PUPD11[1:0]		PUPD10[1:0]		PUPD9[1:0]		PUPD8[1:0]		PUPD7[1:0]		PUPD6[1:0]		PUPD5[1:0]		PUPD4[1:0]		PUPD3[1:0]		PUPD2[1:0]		PUPD1[1:0]		PUPD0[1:0]	
	Reset value	0	0	0	0	0	0	0	0	0	0	0	0	0	0	0	0	0	0	0	0	0	0	0	1	0	0	0	0	0	0	0	0
0x0C	**GPIOx_PUPDR** (where x = C..E and H	PUPD15[1:0]		PUPD14[1:0]		PUPD13[1:0]		PUPD12[1:0]		PUPD11[1:0]		PUPD10[1:0]		PUPD9[1:0]		PUPD8[1:0]		PUPD7[1:0]		PUPD6[1:0]		PUPD5[1:0]		PUPD4[1:0]		PUPD3[1:0]		PUPD2[1:0]		PUPD1[1:0]		PUPD0[1:0]	
	Reset value	0	0	0	0	0	0	0	0	0	0	0	0	0	0	0	0	0	0	0	0	0	0	0	0	0	0	0	0	0	0	0	0
0x10	**GPIOx_IDR** (where x = **A..E,H**)	Res.	Res.	Res.	Res.	Res.	Res.	Res.	Res.	Res.	Res.	Res.	Res.	Res.	Res.	Res.	Res.	ID15	ID14	ID13	ID12	ID11	ID10	ID9	ID8	ID7	ID6	ID5	ID4	ID3	ID2	ID1	ID0
	Reset value																	x	x	x	x	x	x	x	x	x	x	x	x	x	x	x	x

Table 36. GPIO register map and reset values (continued)

Offset	Register	31	30	29	28	27	26	25	24	23	22	21	20	19	18	17	16	15	14	13	12	11	10	9	8	7	6	5	4	3	2	1	0
0x14	**GPIOx_ODR** (where x = **A..E,H**)	Res.	Res.	Res.	Res.	Res.	Res.	Res.	Res.	Res.	Res.	Res.	Res.	Res.	Res.	Res.	Res.	OD15	OD14	OD13	OD12	OD11	OD10	OD9	OD8	OD7	OD6	OD5	OD4	OD3	OD2	OD1	OD0
	Reset value																	0	0	0	0	0	0	0	0	0	0	0	0	0	0	0	0
0x18	**GPIOx_BSRR** (where x = **A..E,H**)	BR15	BR14	BR13	BR12	BR11	BR10	BR9	BR8	BR7	BR6	BR5	BR4	BR3	BR2	BR1	BR0	BS15	BS14	BS13	BS12	BS11	BS10	BS9	BS8	BS7	BS6	BS5	BS4	BS3	BS2	BS1	BS0
	Reset value	0	0	0	0	0	0	0	0	0	0	0	0	0	0	0	0	0	0	0	0	0	0	0	0	0	0	0	0	0	0	0	0
0x1C	**GPIOx_LCKR** (where x = **A..E,H**)	Res.	Res.	Res.	Res.	Res.	Res.	Res.	Res.	Res.	Res.	Res.	Res.	Res.	Res.	Res.	LCKK	LCK15	LCK14	LCK13	LCK12	LCK11	LCK10	LCK9	LCK8	LCK7	LCK6	LCK5	LCK4	LCK3	LCK2	LCK1	LCK0
	Reset value																0	0	0	0	0	0	0	0	0	0	0	0	0	0	0	0	0
0x20	**GPIOx_AFRL** (where x = **A..E,H**)	AFSEL7[3:0]				AFSEL6[3:0]				AFSEL5[3:0]				AFSEL4[3:0]				AFSEL3[3:0]				AFSEL2[3:0]				AFSEL1[3:0]				AFSEL0[3:0]			
	Reset value	0	0	0	0	0	0	0	0	0	0	0	0	0	0	0	0	0	0	0	0	0	0	0	0	0	0	0	0	0	0	0	0
0x24	**GPIOx_AFRH** (where x = **A..E,H**)	AFSEL15[3:0]				AFSEL14[3:0]				AFSEL13[3:0]				AFSEL12[3:0]				AFSEL11[3:0]				AFSEL10[3:0]				AFSEL9[3:0]				AFSEL8[3:0]			
	Reset value	0	0	0	0	0	0	0	0	0	0	0	0	0	0	0	0	0	0	0	0	0	0	0	0	0	0	0	0	0	0	0	0
0x28	**GPIOx_BRR** (where x = **A..E,H**)	Res.	Res.	Res.	Res.	Res.	Res.	Res.	Res.	Res.	Res.	Res.	Res.	Res.	Res.	Res.	Res.	BR15	BR14	BR13	BR12	BR11	BR10	BR9	BR8	BR7	BR6	BR5	BR4	BR3	BR2	BR1	BR0
	Reset value																	0	0	0	0	0	0	0	0	0	0	0	0	0	0	0	0

Refer to *Section 2.2.2 on page 62* for the register boundary addresses.

9 System configuration controller (SYSCFG)

9.1 SYSCFG main features

The STM32L431/433/443 devices feature a set of configuration registers. The main purposes of the system configuration controller are the following:

- Remapping memory areas
- Managing the external interrupt line connection to the GPIOs
- Managing robustness feature
- Setting SRAM2 write protection and software erase
- Configuring FPU interrupts
- Enabling the firewall
- Enabling /disabling I^2C Fast-mode Plus driving capability on some I/Os and voltage booster for I/Os analog switches.

9.2 SYSCFG registers

9.2.1 SYSCFG memory remap register (SYSCFG_MEMRMP)

This register is used for specific configurations on memory remap.

Address offset: 0x00

Reset value: 0x0000 000X (X is the memory mode selected by the BOOT0 pin and BOOT1 option bit)

31	30	29	28	27	26	25	24	23	22	21	20	19	18	17	16
Res	Res	Res	Res	Res	Res	Res	Res	Res	Res	Res	Res	Res	Res	Res	Res
15	**14**	**13**	**12**	**11**	**10**	**9**	**8**	**7**	**6**	**5**	**4**	**3**	**2**	**1**	**0**
Res	Res	Res	Res	Res	Res	Res	Res	Res	Res	Res	Res	Res	MEM_MODE		
													rw	rw	rw

Bits 31:3 Reserved, must be kept at reset value.

Bits 2:0 **MEM_MODE:** Memory mapping selection

These bits control the memory internal mapping at address 0x0000 0000. These bits are used to select the physical remap by software and so, bypass the BOOT mode setting. After reset these bits take the value selected by BOOT0 (pin or option bit depending on nSWBOOT0 option bit) and BOOT1 option bit.

000: Main Flash memory mapped at 0x00000000.
001: System Flash memory mapped at 0x00000000.
010: Reserved
011: SRAM1 mapped at 0x00000000.
100: Reserved
101: Reserved
110: QUADSPI memory mapped at 0x00000000.
111: Reserved

Note: In remap mode, the CPU can access the external memory via ICode bus instead of System bus which boosts up the performance.

9.2.2 SYSCFG configuration register 1 (SYSCFG_CFGR1)

Address offset: 0x04

Reset value: 0x7C00 0001

31	30	29	28	27	26	25	24	23	22	21	20	19	18	17	16
FPU_IE[5..0]						Res	Res	Res	I2C3_ FMP	I2C2_ FMP	I2C1_ FMP	I2C_ PB9_ FMP	I2C_ PB8_ FMP	I2C_ PB7_ FMP	I2C_ PB6_ FMP
rw	rw	rw	rw	rw	rw				rw	rw	rw	rw	rw	rw	rw

15	14	13	12	11	10	9	8	7	6	5	4	3	2	1	0
Res	Res	Res	Res	Res	Res	Res	BOOST EN	Res	Res	Res	Res	Res	Res	Res	FWDIS
							rw								rc_w0

Bits 31:26 **FPU_IE[5..0]**: Floating Point Unit interrupts enable bits
FPU_IE[5]: Inexact interrupt enable
FPU_IE[4]: Input denormal interrupt enable
FPU_IE[3]: Overflow interrupt enable
FPU_IE[2]: underflow interrupt enable
FPU_IE[1]: Divide-by-zero interrupt enable
FPU_IE[0]: Invalid operation interrupt enable

Bits 25:23 Reserved, must be kept at reset value.

Bit 22 **I2C3_FMP:** I2C3 Fast-mode Plus driving capability activation
This bit enables the Fm+ driving mode on I2C3 pins selected through AF selection bits.
0: Fm+ mode is not enabled on I2C3 pins selected through AF selection bits
1: Fm+ mode is enabled on I2C3 pins selected through AF selection bits.

Bit 21 **I2C2_FMP:** I2C2 Fast-mode Plus driving capability activation
This bit enables the Fm+ driving mode on I2C2 pins selected through AF selection bits.
0: Fm+ mode is not enabled on I2C2 pins selected through AF selection bits
1: Fm+ mode is enabled on I2C2 pins selected through AF selection bits.

Bit 20 **I2C1_FMP:** I2C1 Fast-mode Plus driving capability activation
This bit enables the Fm+ driving mode on I2C1 pins selected through AF selection bits.
0: Fm+ mode is not enabled on I2C1 pins selected through AF selection bits
1: Fm+ mode is enabled on I2C1 pins selected through AF selection bits.

Bit 19 **I2C_PB9_FMP**: Fast-mode Plus (Fm+) driving capability activation on PB9
This bit enables the Fm+ driving mode for PB9.
0: PB9 pin operates in standard mode.
1: Fm+ mode enabled on PB9 pin, and the Speed control is bypassed.

Bit 18 **I2C_PB8_FMP**: Fast-mode Plus (Fm+) driving capability activation on PB8
This bit enables the Fm+ driving mode for PB8.
0: PB8 pin operates in standard mode.
1: Fm+ mode enabled on PB8 pin, and the Speed control is bypassed.

Bit 17 **I2C_PB7_FMP**: Fast-mode Plus (Fm+) driving capability activation on PB7
This bit enables the Fm+ driving mode for PB7.
0: PB7 pin operates in standard mode.
1: Fm+ mode enabled on PB7 pin, and the Speed control is bypassed.

Bit 16 **I2C_PB6_FMP**: Fast-mode Plus (Fm+) driving capability activation on PB6
This bit enables the Fm+ driving mode for PB6.
0: PB6 pin operates in standard mode.
1: Fm+ mode enabled on PB6 pin, and the Speed control is bypassed.

Bits 15:9 Reserved, must be kept at reset value.

Bit 8 **BOOSTEN:** I/O analog switch voltage booster enable
0: I/O analog switches are supplied by V_{DDA} voltage. This is the recommended configuration when using the ADC in high V_{DDA} voltage operation.
1: I/O analog switches are supplied by a dedicated voltage booster (supplied by V_{DD}). This is the recommended configuration when using the ADC in low V_{DDA} voltage operation.

Bits 7:1 Reserved, must be kept at reset value.

Bit 0 **FWDIS:** Firewall disable
This bit is cleared by software to protect the access to the memory segments according to the Firewall configuration. Once enabled, the firewall cannot be disabled by software. Only a system reset set the bit.
0 : Firewall protection enabled
1 : Firewall protection disabled

9.2.3 SYSCFG external interrupt configuration register 1 (SYSCFG_EXTICR1)

Address offset: 0x08

Reset value: 0x0000 0000

31	30	29	28	27	26	25	24	23	22	21	20	19	18	17	16
Res	Res	Res	Res	Res	Res	Res	Res	Res	Res	Res	Res	Res	Res	Res	Res

15	14	13	12	11	10	9	8	7	6	5	4	3	2	1	0
Res	EXTI3[2:0]			Res	EXTI2[2:0]			Res	EXTI1[2:0]			Res	EXTI0[2:0]		
	rw	rw	rw		rw	rw	rw		rw	rw	rw		rw	rw	rw

Bits 31:15 Reserved, must be kept at reset value.

Bits 14:12 **EXTI3[2:0]**: EXTI 3 configuration bits
These bits are written by software to select the source input for the EXTI3 external interrupt.
000: PA[3] pin
001: PB[3] pin
010: PC[3] pin
011: PD[3] pin
100: PE[3] pin
101: Reserved
110: Reserved
111: PH[3] pin

Bit 11 Reserved, must be kept at reset value.

Bits 10:8 **EXTI2[2:0]**: EXTI 2 configuration bits

These bits are written by software to select the source input for the EXTI2 external interrupt.

000: PA[2] pin
001: PB[2] pin
010: PC[2] pin
011: PD[2] pin
100: PE[2] pin
101: Reserved
110: Reserved
111: Reserved

Bit 7 Reserved, must be kept at reset value.

Bits 6:4 **EXTI1[2:0]**: EXTI 1 configuration bits

These bits are written by software to select the source input for the EXTI1 external interrupt.

000: PA[1] pin
001: PB[1] pin
010: PC[1] pin
011: PD[1] pin
100: PE[1] pin
101: Reserved
110: Reserved
111: PH[1] pin

Bit 3 Reserved, must be kept at reset value.

Bits 2:0 **EXTI0[2:0]**: EXTI 0 configuration bits

These bits are written by software to select the source input for the EXTI0 external interrupt.

000: PA[0] pin
001: PB[0] pin
010: PC[0] pin
011: PD[0] pin
100: PE[0] pin
101: Reserved
110: Reserved
111: PH[0] pin

9.2.4 SYSCFG external interrupt configuration register 2 (SYSCFG_EXTICR2)

Address offset: 0x0C

Reset value: 0x0000 0000

31	30	29	28	27	26	25	24	23	22	21	20	19	18	17	16
Res	Res	Res	Res	Res	Res	Res	Res	Res	Res	Res	Res	Res	Res	Res	Res

15	14	13	12	11	10	9	8	7	6	5	4	3	2	1	0
Res	EXTI7[2:0]			Res	EXTI6[2:0]			Res	EXTI5[2:0]			Res	EXTI4[2:0]		
	rw	rw	rw		rw	rw	rw		rw	rw	rw		rw	rw	rw

Bits 31:15 Reserved, must be kept at reset value.

Bits 14:12 **EXTI7[2:0]**: EXTI 7 configuration bits

These bits are written by software to select the source input for the EXTI7 external interrupt.
000: PA[7] pin
001: PB[7] pin
010: PC[7] pin
011: PD[7] pin
100: PE[7] pin
101: Reserved
110: Reserved
111: Reserved

Bit 11 Reserved, must be kept at reset value.

Bits 10:8 **EXTI6[2:0]**: EXTI 6 configuration bits

These bits are written by software to select the source input for the EXTI6 external interrupt.
000: PA[6] pin
001: PB[6] pin
010: PC[6] pin
011: PD[6] pin
100: PE[6] pin
101: Reserved
110: Reserved
111: Reserved

Bit 7 Reserved, must be kept at reset value.

Bits 6:4 **EXTI5[2:0]**: EXTI 5 configuration bits

These bits are written by software to select the source input for the EXTI5 external interrupt.
000: PA[5] pin
001: PB[5] pin
010: PC[5] pin
011: PD[5] pin
100: PE[5] pin
101: Reserved
110: Reserved
111: Reserved

Bit 3 Reserved, must be kept at reset value.

Bits 2:0 **EXTI4[2:0]**: EXTI 4 configuration bits

These bits are written by software to select the source input for the EXTI4 external interrupt.
000: PA[4] pin
001: PB[4] pin
010: PC[4] pin
011: PD[4] pin
100: PE[4] pin
101: Reserved
110: Reserved
111: Reserved

Note: Some of the I/O pins mentioned in the above register may not be available on small packages.

9.2.5 SYSCFG external interrupt configuration register 3 (SYSCFG_EXTICR3)

Address offset: 0x10

Reset value: 0x0000 0000

31	30	29	28	27	26	25	24	23	22	21	20	19	18	17	16
Res	Res	Res	Res	Res	Res	Res	Res	Res	Res	Res	Res	Res	Res	Res	Res

15	14	13	12	11	10	9	8	7	6	5	4	3	2	1	0
Res	EXTI11[2:0]			Res	EXTI10[2:0]			Res	EXTI9[2:0]			Res	EXTI8[2:0]		
	rw	rw	rw		rw	rw	rw		rw	rw	rw		rw	rw	rw

Bits 31:15 Reserved, must be kept at reset value.

Bits 14:12 **EXTI11[2:0]**: EXTI 11 configuration bits

These bits are written by software to select the source input for the EXTI11 external interrupt.
000: PA[11] pin
001: PB[11] pin
010: PC[11] pin
011: PD[11] pin
100: PE[11] pin
101: Reserved
110: Reserved
111: Reserved

Bit 11 Reserved, must be kept at reset value.

Bits 10:8 **EXTI10[2:0]**: EXTI 10 configuration bits

These bits are written by software to select the source input for the EXTI10 external interrupt.
000: PA[10] pin
001: PB[10] pin
010: PC[10] pin
011: PD[10] pin
100: PE[10] pin
101: Reserved
110: Reserved
111: Reserved

Bit 7 Reserved, must be kept at reset value.

Bits 6:4 **EXTI9[2:0]**: EXTI 9 configuration bits

These bits are written by software to select the source input for the EXTI9 external interrupt.
000: PA[9] pin
001: PB[9] pin
010: PC[9] pin
011: PD[9] pin
100: PE[9] pin
101: Reserved
110: Reserved
111: Reserved

Bit 3 Reserved, must be kept at reset value.

Bits 2:0 **EXTI8[2:0]**: EXTI 8 configuration bits

These bits are written by software to select the source input for the EXTI8 external interrupt.
000: PA[8] pin
001: PB[8] pin
010: PC[8] pin
011: PD[8] pin
100: PE[8] pin
101: Reserved
110: Reserved
111: Reserved

Note: Some of the I/O pins mentioned in the above register may not be available on small packages.

9.2.6 SYSCFG external interrupt configuration register 4 (SYSCFG_EXTICR4)

Address offset: 0x14

Reset value: 0x0000 0000

31	30	29	28	27	26	25	24	23	22	21	20	19	18	17	16
Res	Res	Res	Res	Res	Res	Res	Res	Res	Res	Res	Res	Res	Res	Res	Res

15	14	13	12	11	10	9	8	7	6	5	4	3	2	1	0
Res	EXTI15[2:0]			Res	EXTI14[2:0]			Res	EXTI13[2:0]			Res	EXTI12[2:0]		
	rw	rw	rw		rw	rw	rw		rw	rw	rw		rw	rw	rw

Bits 31:15 Reserved, must be kept at reset value.

Bits 14:12 **EXTI15[2:0]**: EXTI15 configuration bits

These bits are written by software to select the source input for the EXTI15 external interrupt.

000: PA[15] pin
001: PB[15] pin
010: PC[15] pin
011: PD[15] pin
100: PE[15] pin
101: Reserved
110: Reserved
111: Reserved

Bit 11 Reserved, must be kept at reset value.

Bits 10:8 **EXTI14[2:0]**: EXTI14 configuration bits

These bits are written by software to select the source input for the EXTI14 external interrupt.

000: PA[14] pin
001: PB[14] pin
010: PC[14] pin
011: PD[14] pin
100: PE[14] pin
101: Reserved
110: Reserved
111: Reserved

Bit 7 Reserved, must be kept at reset value.

Bits 6:4 **EXTI13[2:0]**: EXTI13 configuration bits

These bits are written by software to select the source input for the EXTI13 external interrupt.

000: PA[13] pin
001: PB[13] pin
010: PC[13] pin
011: PD[13] pin
100: PE[13] pin
101: Reserved
110: Reserved
111: Reserved

Bit 3 Reserved, must be kept at reset value.

Bits 2:0 **EXTI12[2:0]**: EXTI12 configuration bits

These bits are written by software to select the source input for the EXTI12 external interrupt.

000: PA[12] pin
001: PB[12] pin
010: PC[12] pin
011: PD[12] pin
100: PE[12] pin
101: Reserved
110: Reserved
111: Reserved

Note: Some of the I/O pins mentioned in the above register may not be available on small packages.

9.2.7 SYSCFG SRAM2 control and status register (SYSCFG_SCSR)

Address offset: 0x18

System reset value: 0x0000 0000

31	30	29	28	27	26	25	24	23	22	21	20	19	18	17	16
Res	Res	Res	Res	Res	Res	Res	Res	Res	Res	Res	Res	Res	Res	Res	Res

15	14	13	12	11	10	9	8	7	6	5	4	3	2	1	0
Res	Res	Res	Res	Res	Res	Res	Res	Res	Res	Res	Res	Res	Res	SRAM2 BSY	SRAM2 ER
														r	rw

Bits 31:2 Reserved, must be kept at reset value

Bit 1 **SRAM2BSY:** SRAM2 busy by erase operation

0: No SRAM2 erase operation is on going.
1: SRAM2 erase operation is on going.

Bit 0 **SRAM2ER:** SRAM2 Erase

Setting this bit starts a hardware SRAM2 erase operation. This bit is automatically cleared at the end of the SRAM2 erase operation.

Note: This bit is write-protected: setting this bit is possible only after the correct key sequence is written in the SYSCFG_SKR register.

9.2.8 SYSCFG configuration register 2 (SYSCFG_CFGR2)

Address offset: 0x1C

System reset value: 0x0000 0000

31	30	29	28	27	26	25	24	23	22	21	20	19	18	17	16
Res	Res	Res	Res	Res	Res	Res	Res	Res	Res	Res	Res	Res	Res	Res	Res
15	14	13	12	11	10	9	8	7	6	5	4	3	2	1	0
Res	Res	Res	Res	Res	Res	Res	SPF	Res	Res	Res	Res	ECCL	PVDL	SPL	CLL
							rc_w1					rs	rs	rs	rs

Bits 31:9 Reserved, must be kept at reset value

Bit 8 **SPF**: SRAM2 parity error flag

This bit is set by hardware when an SRAM2 parity error is detected. It is cleared by software by writing ‘1’.

0: No SRAM2 parity error detected

1: SRAM2 parity error detected

Bits 7:4 Reserved, must be kept at reset value

Bit 3 **ECCL**: ECC Lock

This bit is set by software and cleared only by a system reset. It can be used to enable and lock the Flash ECC error connection to TIM1/15/16 Break input.

0: ECC error disconnected from TIM1/15/16 Break input.

1: ECC error connected to TIM1/15/16 Break input.

Bit 2 **PVDL**: PVD lock enable bit

This bit is set by software and cleared only by a system reset. It can be used to enable and lock the PVD connection to TIM1/15/16 Break input, as well as the PVDE and PLS[2:0] in the PWR_CR2 register.

0: PVD interrupt disconnected from TIM1/15/16 Break input. PVDE and PLS[2:0] bits can be programmed by the application.

1: PVD interrupt connected to TIM1/15/16 Break input, PVDE and PLS[2:0] bits are read only.

Bit 1 **SPL**: SRAM2 parity lock bit

This bit is set by software and cleared only by a system reset. It can be used to enable and lock the SRAM2 parity error signal connection to TIM1/15/16 Break inputs.

0: SRAM2 parity error signal disconnected from TIM1/15/16 Break inputs

1: SRAM2 parity error signal connected to TIM1/15/16 Break inputs

Bit 0 **CLL:** Cortex®-M4 LOCKUP (Hardfault) output enable bit

This bit is set by software and cleared only by a system reset. It can be used to enable and lock the connection of Cortex®-M4 LOCKUP (Hardfault) output to TIM1/15/16 Break input

0: Cortex®-M4 LOCKUP output disconnected from TIM1/15/16 Break inputs

1: Cortex®-M4 LOCKUP output connected to TIM1/15/16 Break inputs

9.2.9 SYSCFG SRAM2 write protection register (SYSCFG_SWPR)

Address offset: 0x20

System reset value: 0x0000 0000

31	30	29	28	27	26	25	24	23	22	21	20	19	18	17	16
Res	Res	Res	Res	Res	Res	Res	Res	Res	Res	Res	Res	Res	Res	Res	Res

15	14	13	12	11	10	9	8	7	6	5	4	3	2	1	0
P15WP	P14WP	P13WP	P12WP	P11WP	P10WP	P9WP	P8WP	P7WP	P6WP	P5WP	P4WP	P3WP	P2WP	P1WP	P0WP
rs	rs	rs	rs	rs	rs	rs	rs	rs	rs	rs	rs	rs	rs	rs	rs

Bits 31:16 Reserved, must be kept at reset value

Bits 15:0 **PxWP** (x= 0 to 15): SRAM2 page x write protection
These bits are set by software and cleared only by a system reset.
0: Write protection of SRAM2 page x is disabled.
1: Write protection of SRAM2 page x is enabled.

9.2.10 SYSCFG SRAM2 key register (SYSCFG_SKR)

Address offset: 0x24

System reset value: 0x0000 0000

31	30	29	28	27	26	25	24	23	22	21	20	19	18	17	16
Res	Res	Res	Res	Res	Res	Res	Res	Res	Res	Res	Res	Res	Res	Res	Res

15	14	13	12	11	10	9	8	7	6	5	4	3	2	1	0
Res	Res	Res	Res	Res	Res	Res	Res	KEY[7:0]							
								w	w	w	w	w	w	w	w

Bits 31:8 Reserved, must be kept at reset value

Bits 7:0 **KEY[7:0]**: SRAM2 write protection key for software erase
The following steps are required to unlock the write protection of the SRAM2ER bit in the SYSCFG_CFGR2 register.
1. Write "0xCA" into Key[7:0]
2. Write "0x53" into Key[7:0]
Writing a wrong key reactivates the write protection.

9.2.11 SYSCFG register map

The following table gives the SYSCFG register map and the reset values.

Table 37. SYSCFG register map and reset values

Offset	Register	31	30	29	28	27	26	25	24	23	22	21	20	19	18	17	16	15	14	13	12	11	10	9	8	7	6	5	4	3	2	1	0
0x00	SYSCFG_ MEMRMP	Res.	Res.	Res.	Res.	Res.	Res.	Res.	Res.	Res.	Res.	Res.	Res.	Res.	Res.	Res.	Res.	Res.	Res.	Res.	Res.	Res.	Res.	Res.	Res.	Res.	Res.	Res.	Res.	Res.	MEM_ MODE		
	Reset value																														x	x	x
0x04	SYSCFG_CFGR1	FPU_IE[5..0]						Res.	Res.	Res.	I2C3_FMP	I2C2_FMP	I2C1_FMP	I2C_PB9_FMP	I2C_PB8_FMP	I2C_PB7_FMP	I2C_PB6_FMP	Res.	Res.	Res.	Res.	Res.	Res.	Res.	BOOSTEN	Res.	Res.	Res.	Res.	Res.	Res.	Res.	FWDIS
	Reset value	0	1	1	1	1	1				0	0	0	0	0	0	0								0					0	0	0	1
0x08	SYSCFG_EXTICR1	Res.	Res.	Res.	Res.	Res.	Res.	Res.	Res.	Res.	Res.	Res.	Res.	Res.	Res.	Res.	Res.	Res.	EXTI3 [2:0]			Res.	EXTI2 [2:0]			Res.	EXTI1 [2:0]			Res.	EXTI0 [2:0]		
	Reset value																		0	0	0		0	0	0		0	0	0		0	0	0
0x0C	SYSCFG_EXTICR2	Res.	Res.	Res.	Res.	Res.	Res.	Res.	Res.	Res.	Res.	Res.	Res.	Res.	Res.	Res.	Res.	Res.	EXTI7 [2:0]			Res.	EXTI6 [2:0]			Res.	EXTI5 [2:0]			Res.	EXTI4 [2:0]		
	Reset value																		0	0	0		0	0	0		0	0	0		0	0	0
0x10	SYSCFG_EXTICR3	Res.	Res.	Res.	Res.	Res.	Res.	Res.	Res.	Res.	Res.	Res.	Res.	Res.	Res.	Res.	Res.	Res.	EXTI11 [2:0]			Res.	EXTI10 [2:0]			Res.	EXTI9 [2:0]			Res.	EXTI8 [2:0]		
	Reset value																		0	0	0		0	0	0		0	0	0		0	0	0
0x14	SYSCFG_EXTICR4	Res.	Res.	Res.	Res.	Res.	Res.	Res.	Res.	Res.	Res.	Res.	Res.	Res.	Res.	Res.	Res.	Res.	EXTI15 [2:0]			Res.	EXTI14 [2:0]			Res.	EXTI13 [2:0]			Res.	EXTI12 [2:0]		
	Reset value																		0	0	0		0	0	0		0	0	0		0	0	0
0x18	SYSCFG_SCSR	Res.	Res.	Res.	Res.	Res.	Res.	Res.	Res.	Res.	Res.	Res.	Res.	Res.	Res.	Res.	Res.	Res.	Res.	Res.	Res.	Res.	Res.	Res.	Res.	Res.	Res.	Res.	Res.	Res.	Res.	SRAM2BSY	SRAM2ER
	Reset value																															0	0
0x1C	SYSCFG_CFGR2	Res.	Res.	Res.	Res.	Res.	Res.	Res.	Res.	Res.	Res.	Res.	Res.	Res.	Res.	Res.	Res.	Res.	Res.	Res.	Res.	Res.	Res.	Res.	SPF	Res.	Res.	Res.	Res.	ECCL	PVDL	SPL	CLL
	Reset value																								0					0	0	0	0
0x20	SYSCFG_SWPR	Res.	Res.	Res.	Res.	Res.	Res.	Res.	Res.	Res.	Res.	Res.	Res.	Res.	Res.	Res.	Res.	P15WP	P14WP	P13WP	P12WP	P11WP	P10WP	P9WP	P8WP	P7WP	P6WP	P5WP	P4WP	P3WP	P2WP	P1WP	P0WP
	Reset value																	0	0	0	0	0	0	0	0	0	0	0	0	0	0	0	0
0x24	SYSCFG_SKR	Res.	Res.	Res.	Res.	Res.	Res.	Res.	Res.	Res.	Res.	Res.	Res.	Res.	Res.	Res.	Res.	Res.	Res.	Res.	Res.	Res.	Res.	Res.	Res.	KEY							
	Reset value																									0	0	0	0	0	0	0	0

Refer to *Section 2.2.2 on page 62* for the register boundary addresses.

10 Peripherals interconnect matrix

10.1 Introduction

Several peripherals have direct connections between them.

This allows autonomous communication and or synchronization between peripherals, saving CPU resources thus power supply consumption.

In addition, these hardware connections remove software latency and allow design of predictable system.

Depending on peripherals, these interconnections can operate in Run, Sleep, Low-power run and sleep, Stop 0, Stop 1 and Stop 2 modes.

10.2 Connection summary

Table 38. STM32L431/433/443 peripherals interconnect matrix(1) (2)

-		Destination														
		TIM1	TIM2	TIM6	TIM7	TIM15	TIM16	LPTIM1	LPTIM2	ADC1	OPAMP1	DAC1	DAC2	COMP1	COMP2	IRTIM
Source	TIM1	-	1	-	-	1	-	-	-	2	-	-	-	7	-	-
	TIM2	1	-	-	-	-	-	-	-	2	-	4	4	7	-	-
	TIM6	-	-	-	-	-	-	-	-	2	-	4	4	-	-	-
	TIM7	-	-	-	-	-	-	-	-	-	-	4	4	-	-	-
	TIM15	1	-	-	-	-	-	-	-	2	-	4	4	-	7	12
	TIM16	-	-	-	-	1	-	-	-	-	-	-	-	-	-	12
	LPTIM1	-	-	-	-	-	-	-	-	-	-	-	-	-	-	-
	LPTIM2	-	-	-	-	-	-	-	-	-	-	-	-	-	-	-
	ADC1	3	-	-	-	-	-	-	-	-	-	-	-	-	-	-
	T. Sensor	-	-	-	-	-	-	-	-	9	-	-	-	-	-	-
	VBAT	-	-	-	-	-	-	-	-	9	-	-	-	-	-	-
	VREFINT	-	-	-	-	-	-	-	-	9	-	-	-	-	-	-
	OPAMP1	-	-	-	-	-	-	-	-	9	-	-	-	-	-	-
	DAC1	-	-	-	-	-	-	-	-	9	9	-	-	-	-	-
	DAC2	-	-	-	-	-	-	-	-	9	-	-	-	-	-	-
	HSE	-	-	-	-	-	5	-	-	-	-	-	-	-	-	-
	LSE	-	5	-	-	5	5	-	-	-	-	-	-	-	-	-
	MSI	-	-	-	-	-	5	-	-	-	-	-	-	-	-	-
	LSI	-	-	-	-	-	5	-	-	-	-	-	-	-	-	-

Table 38. STM32L431/433/443 peripherals interconnect matrix(1) (2) (continued)

-		Destination														
		TIM1	TIM2	TIM6	TIM7	TIM15	TIM16	LPTIM1	LPTIM2	ADC1	OPAMP1	DAC1	DAC2	COMP1	COMP2	IRTIM
Source	MCO	-	-	-	-	-	5	-	-	-	-	-	-	-	-	-
	EXTI	-	-	-	-	-	-	-	-	2	-	4	4	-	-	-
	RTC	-	-	-	-	-	5	6	6	-	-	-	-	-	-	-
	COMP1	10	10	-	-	10	10	6	6	-	-	-	-	-	-	-
	COMP2	10	10	-	-	10	10	6	6	-	-	-	-	-	-	-
	SYST ERR	11	-	-	-	11	11	-	-	-	-	-	-	-	-	-
	USB(3)	-	8	-	-	-	-	-	-	-	-	-	-	-	-	-

1. Numbers in table are links to corresponding detailed sub-section in *Section 10.3: Interconnection details*.
2. The "-" symbol in grayed cells means no interconnect.
3. Not available for STM32L431xx devices.

10.3 Interconnection details

10.3.1 From timer (TIM1/TIM2/TIM15/TIM16) to timer (TIM1/TIM2/TIM15/TIM16)

Purpose

Some of the TIMx timers are linked together internally for timer synchronization or chaining.

When one timer is configured in Master Mode, it can reset, start, stop or clock the counter of another timer configured in Slave Mode.

A description of the feature is provided in: *Section 26.3.19: Timer synchronization*.

The modes of synchronization are detailed in:

- *Section 25.3.26: Timer synchronization* for advanced-control timers (TIM1)
- *Section 26.3.18: Timers and external trigger synchronization* for general-purpose timers (TIM2)
- *Section 27.4.17: External trigger synchronization (TIM15 only)* for general-purpose timer (TIM15)

Triggering signals

The output (from Master) is on signal TIMx_TRGO (and TIMx_TRGO2 for TIM1) following a configurable timer event.

The input (to slave) is on signals TIMx_ITR0/ITR1/ITR2/ITR3

The input and output signals for TIM1 are shown in *Figure 163: Advanced-control timer block diagram*.

The possible master/slave connections are given in:

- *Table 111: TIM1 internal trigger connection*
- *Table 115: TIMx internal trigger connection*
- *Table 118: TIMx Internal trigger connection*

Active power mode

Run, Sleep, Low-power run, Low-power sleep.

10.3.2 From timer (TIM1/TIM2/TIM6/TIM15) and EXTI to ADC (ADC1)

Purpose

General-purpose timers (TIM2), basic timer (TIM6), advanced-control timer (TIM1), general-purpose timer (TIM15) and EXTI can be used to generate an ADC triggering event.

TIMx synchronization is described in: *Section 25.3.27: ADC synchronization* (TIM1).

ADC synchronization is described in: *Section 16.4.18: Conversion on external trigger and trigger polarity (EXTSEL, EXTEN, JEXTSEL, JEXTEN)*.

Triggering signals

The output (from timer) is on signal TIMx_TRGO, TIMx_TRGO2 or TIMx_CCx event.

The input (to ADC) is on signal EXT[15:0], JEXT[15:0].

The connection between timers and ADC is provided in:

- *Table 57: ADC1, ADC2 - External triggers for regular channels (devices with 2 ADCs)*
- *Table 59: ADC1, ADC2 - External trigger for injected channels (devices with 2 ADCs)*

Active power mode

Run, Sleep, Low-power run, Low-power sleep.

10.3.3 From ADC (ADC1) to timer (TIM1)

Purpose

ADC1 can provide trigger event through watchdog signals to advanced-control timers (TIM1).

A description of the ADC analog watchdog setting is provided in: *Section 16.4.28: Analog window watchdog (AWD1EN, JAWD1EN, AWD1SGL, AWD1CH, AWD2CH, AWD3CH, AWD_HTx, AWD_LTx, AWDx)*.

Trigger settings on the timer are provided in: *Section 25.3.4: External trigger input*.

Triggering signals

The output (from ADC) is on signals ADCn_AWDx_OUT n = 1, 2, 3 (for ADC1) x = 1, 2, 3 (3 watchdog per ADC) and the input (to timer) on signal TIMx_ETR (external trigger).

Active power mode

Run, Sleep, Low-power run, Low-power sleep.

10.3.4 From timer (TIM2/TIM6/TIM7) and EXTI to DAC (DAC1/DAC2)

Purpose

General-purpose timer (TIM2), basic timers (TIM6, TIM7), general-purpose timer (TIM15) and EXTI can be used as triggering event to start a DAC conversion.

Triggering signals

The output (from timer) is on signal TIMx_TRGO directly connected to corresponding DAC inputs.

Selection of input triggers on DAC is provided in *Section 17.3.6: DAC trigger selection* (single and dual mode).

Active power mode

Run, Sleep, Low-power run, Low-power sleep.

10.3.5 From HSE, LSE, LSI, MSI, MCO, RTC to timer (TIM2/TIM15/TIM16)

Purpose

External clocks (HSE, LSE), internal clocks (LSI, MSI), microcontroller output clock (MCO), GPIO and RTC wakeup interrupt can be used as input to general-purpose timer (TIM15/16) channel 1.

This allows to calibrate the HSI16/MSI system clocks (with TIM15/TIM16 and LSE) or LSI (with TIM16 and HSE). This is also used to precisely measure LSI (with TIM16 and HSI16) or MSI (with TIM16 and HSI16) oscillator frequency.

When Low Speed External (LSE) oscillator is used, no additional hardware connections are required.

This feature is described in *Section 6.2.17: Internal/external clock measurement with TIM15/TIM16*.

External clock LSE can be used as input to general-purpose timers (TIM2) on TIM2_ETR pin, see *Section 26.4.19: TIM2 option register 1 (TIM2_OR1)*.

Active power mode

Run, Sleep, Low-power run, Low-power sleep.

10.3.6 From RTC, COMP1, COMP2 to low-power timer (LPTIM1/LPTIM2)

Purpose

RTC alarm A/B, RTC_TAMP1/2/3 input detection, COMP1/2_OUT can be used as trigger to start LPTIM counters (LPTIM1/2).

Triggering signals

This trigger feature is described in *Section 29.4.5: Trigger multiplexer* (and following sections).

The input selection is described in *Table 128: LPTIM external trigger connection*.

Active power mode

Run, Sleep, Low-power run, Low-power sleep, Stop 0, Stop 1, Stop 2 (LPTIM1 only).

10.3.7 From timer (TIM1/TIM2/TIM15) to comparators (COMP1/COMP2)

Purpose

Advanced-control timer (TIM1), general-purpose timer (TIM2) and general-purpose timer (TIM15) can be used as blanking window input to COMP1/COMP2

The blanking function is described in *Section 19.3.7: Comparator output blanking function*.

The blanking sources are given in:

- *Section 19.6.1: Comparator 1 control and status register (COMP1_CSR)* bits 20:18 BLANKING[2:0]
- *Section 19.6.2: Comparator 2 control and status register (COMP2_CSR)* bits 20:18 BLANKING[2:0]

Triggering signals

Timer output signal TIMx_Ocx are the inputs to blanking source of COMP1/COMP2.

Active power mode

Run, Sleep, Low-power run, Low-power sleep.

10.3.8 From USB[(a)] to timer (TIM2)

Purpose

USB (FS SOF) can generate a trigger to general-purpose timer (TIM2).

Connection of USB to TIM2 is described in *Table 115: TIMx internal trigger connection*.

Triggering signals

Internal signal generated by USB_FS Start Of Frame.

Active power mode

Run, Sleep.

a. Not available for STM32L431xx devices.

10.3.9 From internal analog source to ADC (ADC1) and OPAMP (OPAMP1)

Purpose

Internal temperature sensor (V_{TS}) and V_{BAT} monitoring channel are connected to ADC1 input channels.

Internal reference voltage (V_{REFINT}) is connected to ADC1 input channels.

OPAMP1 output can be connected to ADC1 input channel through the GPIO.

DAC1_OUT1 and DAC1_OUT2 outputs can be connected to ADC1 input channel.

DAC1_OUT1 can be connected to OPAMP1_VINP.

This is according:

- *Section 16.2: ADC main features*
- *Section 16.4.11: Channel selection (SQRx, JSQRx)*
- *Figure 40: ADC1 connectivity (devices with 2 ADCs)*
- *Table 87: Operational amplifier possible connections*

Active power mode

Run, Sleep, Low-power run, Low-power sleep.

10.3.10 From comparators (COMP1/COMP2) to timers (TIM1/TIM2/TIM15/TIM16)

Purpose

Comparators (COMP1/COMP2) output values can be connected to timers (TIM1/TIM2/TIM15/TIM16) input captures or TIMx_ETR signals.

The connection to ETR is described in *Section 25.3.4: External trigger input*.

Comparators (COMP1/COMP2) output values can also generate break input signals for timers (TIM1) on input pins TIMx_BKIN or TIMx_BKIN2 through GPIO alternate function selection using open drain connection of IO, see *Section 25.3.17: Bidirectional break inputs*.

The possible connections are given in:

- *Section 25.4.21: TIM1 option register 1 (TIM1_OR1)*
- *Section 25.4.25: TIM1 option register 2 (TIM1_OR2)*
- *Section 26.4.19: TIM2 option register 1 (TIM2_OR1)*
- *Section 26.4.20: TIM2 option register 2 (TIM2_OR2)*
- *Section 27.3: TIM16 main features*

Active power mode

Run, Sleep, Low-power run, Low-power sleep.

10.3.11 From system errors to timers (TIM1/TIM15/TIM16)

Purpose

CSS, CPU hardfault, RAM parity error, FLASH ECC double error detection, PVD can generate system errors in the form of timer break toward timers (TIM1/TIM15/TIM16).

The purpose of the break function is to protect power switches driven by PWM signals generated by the timers.

List of possible source of break are described in:

- *Section 25.3.16: Using the break function* (TIM1)
- *Section 27.4.13: Using the break function* (TIM15/TIM16)
- *Figure 272: TIM15 block diagram*
- *Figure 273: TIM16 block diagram*

Active power mode

Run, Sleep, Low-power run, Low-power sleep.

10.3.12 From timers (TIM16) to IRTIM

Purpose

General-purpose timer (TIM15/TIM16) output channel TIMx_OC1 are used to generate the waveform of infrared signal output.

The functionality is described in *Section 30: Infrared interface (IRTIM)*.

Active power mode

Run, Sleep, Low-power run, Low-power sleep.

11 Direct memory access controller (DMA)

11.1 Introduction

Direct memory access (DMA) is used in order to provide high-speed data transfer between peripherals and memory as well as memory to memory. Data can be quickly moved by DMA without any CPU actions. This keeps CPU resources free for other operations.

The two DMA controllers have 14 channels in total, each dedicated to managing memory access requests from one or more peripherals. Each has an arbiter for handling the priority between DMA requests.

11.2 DMA main features

- 14 independently configurable channels (requests)
- Each channel is connected to dedicated hardware DMA requests, software trigger is also supported on each channel. This configuration is done by software.
- Priorities between requests from channels of one DMA are software programmable (4 levels consisting of very high, high, medium, low) or hardware in case of equality (request 1 has priority over request 2, etc.)
- Independent source and destination transfer size (byte, half word, word), emulating packing and unpacking. Source/destination addresses must be aligned on the data size.
- Support for circular buffer management
- 3 event flags (DMA Half Transfer, DMA Transfer complete and DMA Transfer Error) logically ORed together in a single interrupt request for each channel
- Memory-to-memory transfer
- Peripheral-to-memory and memory-to-peripheral, and peripheral-to-peripheral transfers
- Access to Flash, SRAM, APB and AHB peripherals as source and destination
- Programmable number of data to be transferred: up to 65535

11.3 DMA implementation

This manual describes the full set of features implemented in DMA1. DMA2 supports the same number of channels, and is identical to DMA1.

Table 39. DMA implementation

Feature	DMA1	DMA2
Number of DMA channels	7	7

11.4 DMA functional description

The block diagram is shown in the following figure.

Figure 24. DMA block diagram

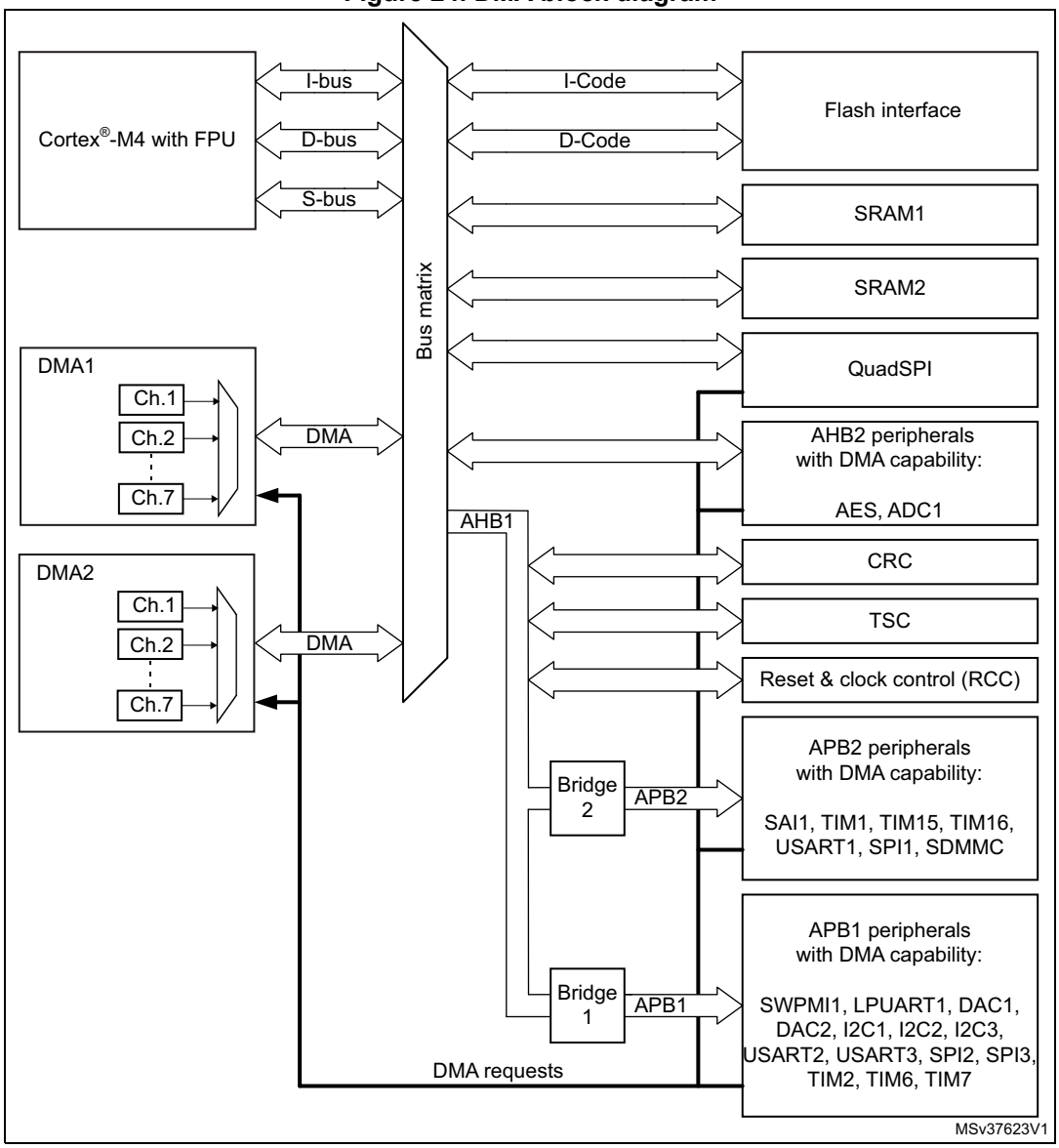

The DMA controller performs direct memory transfer by sharing the system bus with the Cortex®-M4 core. The DMA request may stop the CPU access to the system bus for some bus cycles, when the CPU and DMA are targeting the same destination (memory or peripheral). The bus matrix implements round-robin scheduling, thus ensuring at least half of the system bus bandwidth (both to memory and peripheral) for the CPU.

11.4.1 DMA transactions

After an event, the peripheral sends a request signal to the DMA Controller. The DMA controller serves the request depending on the channel priorities. As soon as the DMA Controller accesses the peripheral, an Acknowledge is sent to the peripheral by the DMA

Controller. The peripheral releases its request as soon as it gets the Acknowledge from the DMA Controller. Once the request is de-asserted by the peripheral, the DMA Controller release the Acknowledge. If there are more requests, the peripheral can initiate the next transaction.

In summary, each DMA transfer consists of three operations:

- The loading of data from the peripheral data register or a location in memory addressed through an internal current peripheral/memory address register. The start address used for the first transfer is the base peripheral/memory address programmed in the DMA_CPARx or DMA_CMARx register.
- The storage of the data loaded to the peripheral data register or a location in memory addressed through an internal current peripheral/memory address register. The start address used for the first transfer is the base peripheral/memory address programmed in the DMA_CPARx or DMA_CMARx register.
- The post-decrementing of the DMA_CNDTRx register, which contains the number of transactions that have still to be performed.

11.4.2 Arbiter

The arbiter manages the channel requests based on their priority and launches the peripheral/memory access sequences.

The priorities are managed in two stages:

- Software: each channel priority can be configured in the DMA_CCRx register. There are four levels:
  - Very high priority
  - High priority
  - Medium priority
  - Low priority
- Hardware: if 2 requests have the same software priority level, the channel with the lowest number will get priority versus the channel with the highest number. For example, channel 2 gets priority over channel 4.

11.4.3 DMA channels

Each channel can handle DMA transfer between a peripheral register located at a fixed address and a memory address. The amount of data to be transferred (up to 65535) is programmable. The register which contains the amount of data items to be transferred is decremented after each transaction.

Programmable data sizes

Transfer data sizes of the peripheral and memory are fully programmable through the PSIZE and MSIZE bits in the DMA_CCRx register.

Pointer incrementation

Peripheral and memory pointers can optionally be automatically post-incremented after each transaction depending on the PINC and MINC bits in the DMA_CCRx register. If incremented mode is enabled, the address of the next transfer will be the address of the previous one incremented by 1, 2 or 4 depending on the chosen data size. The first transfer address is the one programmed in the DMA_CPARx/DMA_CMARx registers. During

transfer operations, these registers keep the initially programmed value. The current transfer addresses (in the current internal peripheral/memory address register) are not accessible by software.

If the channel is configured in non-circular mode, no DMA request is served after the last transfer (that is once the number of data items to be transferred has reached zero). In order to reload a new number of data items to be transferred into the DMA_CNDTRx register, the DMA channel must be disabled.

Note: If a DMA channel is disabled, the DMA registers are not reset. The DMA channel registers (DMA_CCRx, DMA_CPARx and DMA_CMARx) retain the initial values programmed during the channel configuration phase.

In circular mode, after the last transfer, the DMA_CNDTRx register is automatically reloaded with the initially programmed value. The current internal address registers are reloaded with the base address values from the DMA_CPARx/DMA_CMARx registers.

Channel configuration procedure

The following sequence should be followed to configure a DMA channel x (where x is the channel number).

1. Set the peripheral register address in the DMA_CPARx register. The data will be moved from/ to this address to/ from the memory after the peripheral event.
2. Set the memory address in the DMA_CMARx register. The data will be written to or read from this memory after the peripheral event.
3. Configure the total number of data to be transferred in the DMA_CNDTRx register. After each peripheral event, this value will be decremented.
4. Configure the channel priority using the PL[1:0] bits in the DMA_CCRx register
5. Configure data transfer direction, circular mode, peripheral & memory incremented mode, peripheral & memory data size, and interrupt after half and/or full transfer in the DMA_CCRx register
6. Activate the channel by setting the ENABLE bit in the DMA_CCRx register.

As soon as the channel is enabled, it can serve any DMA request from the peripheral connected on the channel.

Once half of the bytes are transferred, the half-transfer flag (HTIF) is set and an interrupt is generated if the Half-Transfer Interrupt Enable bit (HTIE) is set. At the end of the transfer, the Transfer Complete Flag (TCIF) is set and an interrupt is generated if the Transfer Complete Interrupt Enable bit (TCIE) is set.

Circular mode

Circular mode is available to handle circular buffers and continuous data flows (e.g. ADC scan mode). This feature can be enabled using the CIRC bit in the DMA_CCRx register. When circular mode is activated, the number of data to be transferred is automatically reloaded with the initial value programmed during the channel configuration phase, and the DMA requests continue to be served.

Memory-to-memory mode

The DMA channels can also work without being triggered by a request from a peripheral. This mode is called Memory to Memory mode.

If the MEM2MEM bit in the DMA_CCRx register is set, then the channel initiates transfers as soon as it is enabled by software by setting the Enable bit (EN) in the DMA_CCRx register. The transfer stops once the DMA_CNDTRx register reaches zero. Memory to Memory mode may not be used at the same time as Circular mode.

11.4.4 Programmable data width, data alignment and endians

When PSIZE and MSIZE are not equal, the DMA performs some data alignments as described in *Table 40: Programmable data width & endian behavior (when bits PINC = MINC = 1)*.

Table 40. Programmable data width & endian behavior (when bits PINC = MINC = 1)

Source port width	Destination port width	Number of data items to transfer (NDT)	Source content: address / data	Transfer operations	Destination content: address / data
8	8	4	@0x0 / B0 @0x1 / B1 @0x2 / B2 @0x3 / B3	1: READ B0[7:0] @0x0 then WRITE B0[7:0] @0x0 2: READ B1[7:0] @0x1 then WRITE B1[7:0] @0x1 3: READ B2[7:0] @0x2 then WRITE B2[7:0] @0x2 4: READ B3[7:0] @0x3 then WRITE B3[7:0] @0x3	@0x0 / B0 @0x1 / B1 @0x2 / B2 @0x3 / B3
8	16	4	@0x0 / B0 @0x1 / B1 @0x2 / B2 @0x3 / B3	1: READ B0[7:0] @0x0 then WRITE 00B0[15:0] @0x0 2: READ B1[7:0] @0x1 then WRITE 00B1[15:0] @0x2 3: READ B2[7:0] @0x2 then WRITE 00B2[15:0] @0x4 4: READ B3[7:0] @0x3 then WRITE 00B3[15:0] @0x6	@0x0 / 00B0 @0x2 / 00B1 @0x4 / 00B2 @0x6 / 00B3
8	32	4	@0x0 / B0 @0x1 / B1 @0x2 / B2 @0x3 / B3	1: READ B0[7:0] @0x0 then WRITE 000000B0[31:0] @0x0 2: READ B1[7:0] @0x1 then WRITE 000000B1[31:0] @0x4 3: READ B2[7:0] @0x2 then WRITE 000000B2[31:0] @0x8 4: READ B3[7:0] @0x3 then WRITE 000000B3[31:0] @0xC	@0x0 / 000000B0 @0x4 / 000000B1 @0x8 / 000000B2 @0xC / 000000B3
16	8	4	@0x0 / B1B0 @0x2 / B3B2 @0x4 / B5B4 @0x6 / B7B6	1: READ B1B0[15:0] @0x0 then WRITE B0[7:0] @0x0 2: READ B3B2[15:0] @0x2 then WRITE B2[7:0] @0x1 3: READ B5B4[15:0] @0x4 then WRITE B4[7:0] @0x2 4: READ B7B6[15:0] @0x6 then WRITE B6[7:0] @0x3	@0x0 / B0 @0x1 / B2 @0x2 / B4 @0x3 / B6
16	16	4	@0x0 / B1B0 @0x2 / B3B2 @0x4 / B5B4 @0x6 / B7B6	1: READ B1B0[15:0] @0x0 then WRITE B1B0[15:0] @0x0 2: READ B3B2[15:0] @0x2 then WRITE B3B2[15:0] @0x2 3: READ B5B4[15:0] @0x4 then WRITE B5B4[15:0] @0x4 4: READ B7B6[15:0] @0x6 then WRITE B7B6[15:0] @0x6	@0x0 / B1B0 @0x2 / B3B2 @0x4 / B5B4 @0x6 / B7B6
16	32	4	@0x0 / B1B0 @0x2 / B3B2 @0x4 / B5B4 @0x6 / B7B6	1: READ B1B0[15:0] @0x0 then WRITE 0000B1B0[31:0] @0x0 2: READ B3B2[15:0] @0x2 then WRITE 0000B3B2[31:0] @0x4 3: READ B5B4[15:0] @0x4 then WRITE 0000B5B4[31:0] @0x8 4: READ B7B6[15:0] @0x6 then WRITE 0000B7B6[31:0] @0xC	@0x0 / 0000B1B0 @0x4 / 0000B3B2 @0x8 / 0000B5B4 @0xC / 0000B7B6
32	8	4	@0x0 / B3B2B1B0 @0x4 / B7B6B5B4 @0x8 / BBBAB9B8 @0xC / BFBEBDBC	1: READ B3B2B1B0[31:0] @0x0 then WRITE B0[7:0] @0x0 2: READ B7B6B5B4[31:0] @0x4 then WRITE B4[7:0] @0x1 3: READ BBBAB9B8[31:0] @0x8 then WRITE B8[7:0] @0x2 4: READ BFBEBDBC[31:0] @0xC then WRITE BC[7:0] @0x3	@0x0 / B0 @0x1 / B4 @0x2 / B8 @0x3 / BC
32	16	4	@0x0 / B3B2B1B0 @0x4 / B7B6B5B4 @0x8 / BBBAB9B8 @0xC / BFBEBDBC	1: READ B3B2B1B0[31:0] @0x0 then WRITE B1B0[15:0] @0x0 2: READ B7B6B5B4[31:0] @0x4 then WRITE B5B4[15:0] @0x2 3: READ BBBAB9B8[31:0] @0x8 then WRITE B9B8[15:0] @0x4 4: READ BFBEBDBC[31:0] @0xC then WRITE BDBC[15:0] @0x6	@0x0 / B1B0 @0x2 / B5B4 @0x4 / B9B8 @0x6 / BDBC
32	32	4	@0x0 / B3B2B1B0 @0x4 / B7B6B5B4 @0x8 / BBBAB9B8 @0xC / BFBEBDBC	1: READ B3B2B1B0[31:0] @0x0 then WRITE B3B2B1B0[31:0] @0x0 2: READ B7B6B5B4[31:0] @0x4 then WRITE B7B6B5B4[31:0] @0x4 3: READ BBBAB9B8[31:0] @0x8 then WRITE BBBAB9B8[31:0] @0x8 4: READ BFBEBDBC[31:0] @0xC then WRITE BFBEBDBC[31:0] @0xC	@0x0 / B3B2B1B0 @0x4 / B7B6B5B4 @0x8 / BBBAB9B8 @0xC / BFBEBDBC

Addressing an AHB peripheral that does not support byte or halfword write operations

When the DMA initiates an AHB byte or halfword write operation, the data are duplicated on the unused lanes of the HWDATA[31:0] bus. So when the used AHB slave peripheral does not support byte or halfword write operations (when HSIZE is not used by the peripheral) *and* does not generate any error, the DMA writes the 32 HWDATA bits as shown in the two examples below:

- To write the halfword “0xABCD”, the DMA sets the HWDATA bus to “0xABCDABCD” with HSIZE = HalfWord
- To write the byte “0xAB”, the DMA sets the HWDATA bus to “0xABABABAB” with HSIZE = Byte

Assuming that the AHB/APB bridge is an AHB 32-bit slave peripheral that does not take the HSIZE data into account, it will transform any AHB byte or halfword operation into a 32-bit APB operation in the following manner:

- an AHB byte write operation of the data “0xB0” to 0x0 (or to 0x1, 0x2 or 0x3) will be converted to an APB word write operation of the data “0xB0B0B0B0” to 0x0
- an AHB halfword write operation of the data “0xB1B0” to 0x0 (or to 0x2) will be converted to an APB word write operation of the data “0xB1B0B1B0” to 0x0

For instance, to write the APB backup registers (16-bit registers aligned to a 32-bit address boundary), the software must configure the memory source size (MSIZE) to “16-bit” and the peripheral destination size (PSIZE) to “32-bit”.

11.4.5 Error management

A DMA transfer error can be generated by reading from or writing to a reserved address space. When a DMA transfer error occurs during a DMA read or a write access, the faulty channel is automatically disabled through a hardware clear of its EN bit in the corresponding Channel configuration register (DMA_CCRx). The channel's transfer error interrupt flag (TEIF) in the DMA_IFR register is set and an interrupt is generated if the transfer error interrupt enable bit (TEIE) in the DMA_CCRx register is set.

11.4.6 DMA interrupts

An interrupt can be produced on a Half-transfer, Transfer complete or Transfer error for each DMA channel. Separate interrupt enable bits are available for flexibility.

Table 41. DMA interrupt requests

Interrupt event	Event flag	Enable control bit
Half-transfer	HTIF	HTIE
Transfer complete	TCIF	TCIE
Transfer error	TEIF	TEIE

11.4.7 DMA request mapping

DMA controller

The hardware requests from the peripherals (TIM1/2/6/7/15/16, ADC1, DAC1/2, SPI1/2/3, I2C1/2/3, SDMMC1, QUADSPI, SWPMI1, SAI1, AES[(a)], USART1/2/3 and LPUART1) are mapped to the DMA1 or DMA2 channels (1 to 7) through the DMA1/2 channel selection register.

Refer to *Figure 25: DMA1 request mapping* and *Figure 26: DMA2 request mapping*.

The peripheral DMA requests can be independently activated/de-activated by programming the DMA control bit in the registers of the corresponding peripheral.

a. Not available for STM32L431xx and STM32L433xx devices.

Figure 25. DMA1 request mapping

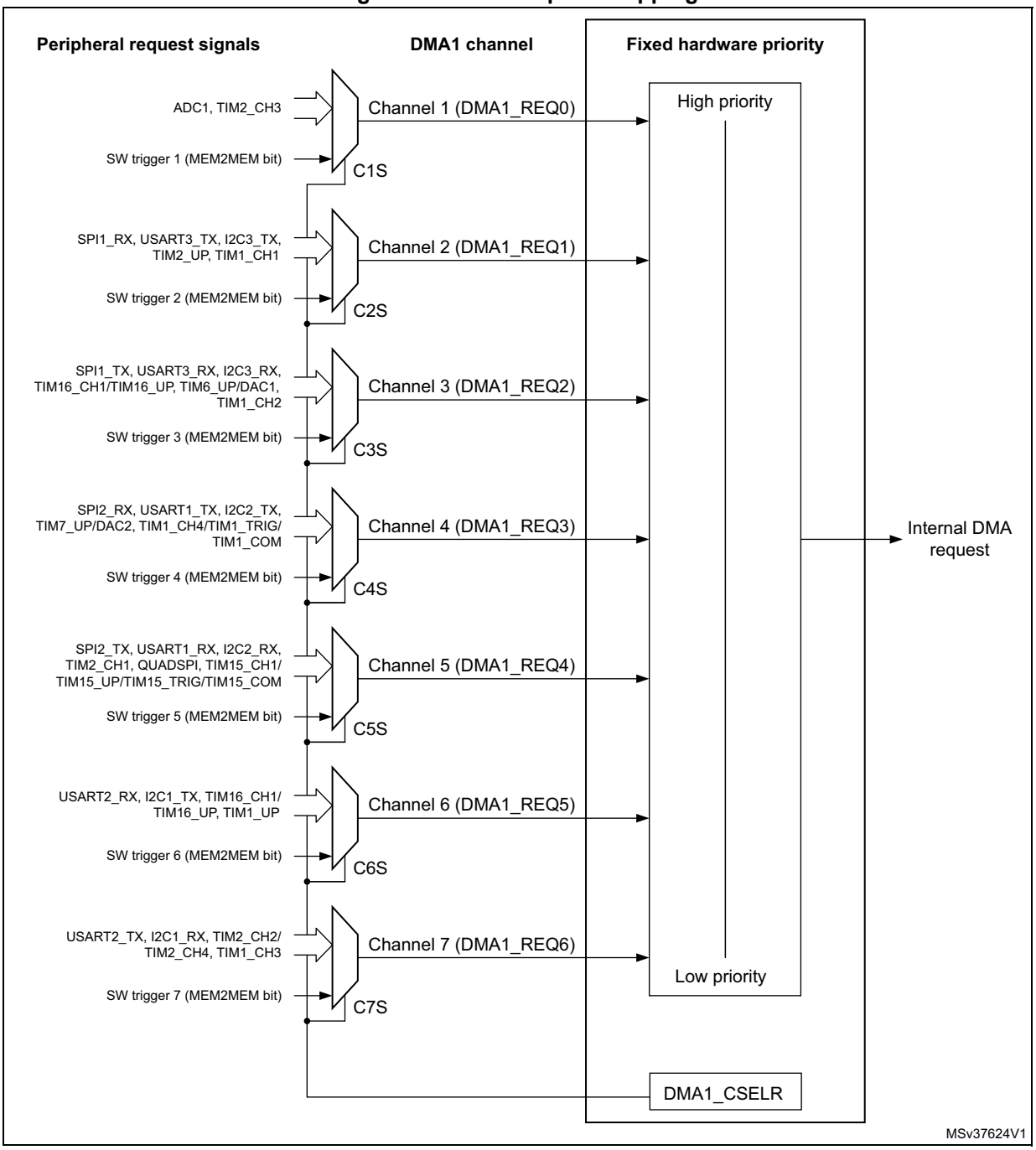

Figure 26. DMA2 request mapping

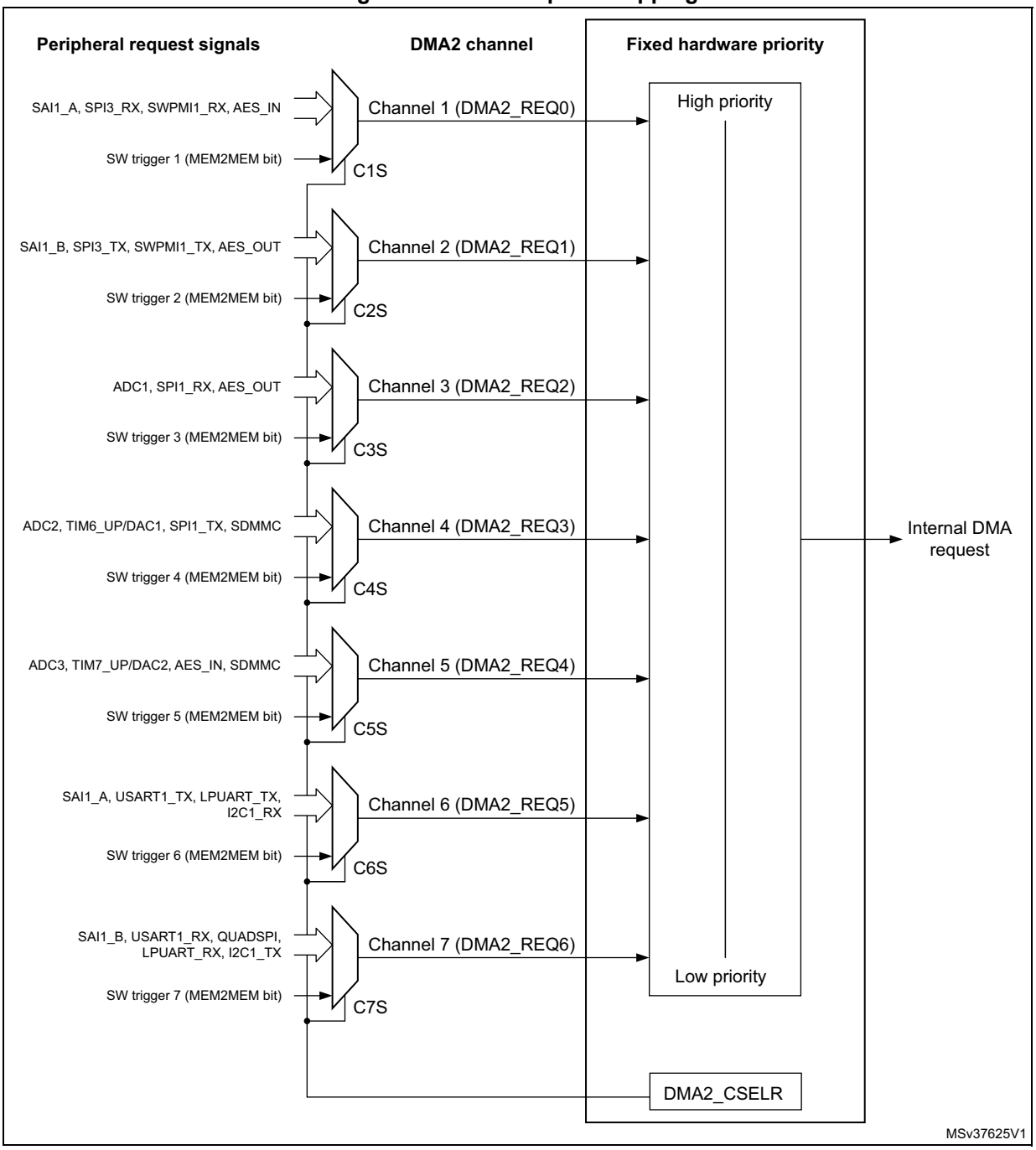

Table 42. Summary of the DMA1 requests for each channel

Request. number	Channel 1	Channel 2	Channel 3	Channel 4	Channel 5	Channel 6	Channel 7
0	ADC1	-	-	-	-	-	-
1	-	SPI1_RX	SPI1_TX	SPI2_RX	SPI2_TX	SAI2_A	SAI2_B
2	-	USART3_TX	USART3_RX	USART1_TX	USART1_RX	USART2_RX	USART2_TX

Table 42. Summary of the DMA1 requests for each channel (continued)

Request. number	Channel 1	Channel 2	Channel 3	Channel 4	Channel 5	Channel 6	Channel 7
3	-	I2C3_TX	I2C3_RX	I2C2_TX	I2C2_RX	I2C1_TX	I2C1_RX
4	TIM2_CH3	TIM2_UP	TIM16_CH1 TIM16_UP	-	TIM2_CH1	TIM16_CH1 TIM16_UP	TIM2_CH2 TIM2_CH4
5	-	-	-	TIM7_UP. DAC2	QUADSPI	-	-
6	-	-	TIM6_UP DAC1	-	-	-	-
7	-	TIM1_CH1	TIM1_CH2	TIM1_CH4 TIM1_TRIG TIM1_COM	TIM15_CH1 TIM15_UP TIM15_TRIG TIM15_COM	TIM1_UP	TIM1_CH3

Table 43. Summary of the DMA2 requests for each channel

Request. number	Channel 1	Channel 2	Channel 3	Channel 4	Channel 5	Channel 6	Channel 7
0	-	-	ADC1	-	-	-	-
1	SAI1_A	SAI1_B	-	-	-	SAI1_A	SAI1_B
2	-	-	-	-	-	USART1_TX	USART1_RX
3	SPI3_RX	SPI3_TX	-	TIM6_UP DAC1	TIM7_UP DAC2	-	QUADSPI
4	SWPMI_RX	SWPMI_TX	SPI1_RX	SPI1_TX	-	LPUART_TX	LPUART_RX
5	-	-	-	-	-	I2C1_RX	I2C1_TX
6	AES_IN(1)	AES_OUT(1)	AES_OUT(1)	-	AES_IN(1)	-	-
7	-	-	-	SDMMC1	SDMMC1	-	-

1. Not available for STM32L431xx and STM32L433xx devices.

11.5 DMA registers

Refer to *Section 1.1 on page 55* for a list of abbreviations used in register descriptions.

The peripheral registers can be accessed by bytes (8-bit), half-words (16-bit) or words (32-bit).

11.5.1 DMA interrupt status register (DMA_ISR)

Address offset: 0x00

Reset value: 0x0000 0000

31	30	29	28	27	26	25	24	23	22	21	20	19	18	17	16
Res.	Res.	Res.	Res.	TEIF7	HTIF7	TCIF7	GIF7	TEIF6	HTIF6	TCIF6	GIF6	TEIF5	HTIF5	TCIF5	GIF5
				r	r	r	r	r	r	r	r	r	r	r	r

15	14	13	12	11	10	9	8	7	6	5	4	3	2	1	0
TEIF4	HTIF4	TCIF4	GIF4	TEIF3	HTIF3	TCIF3	GIF3	TEIF2	HTIF2	TCIF2	GIF2	TEIF1	HTIF1	TCIF1	GIF1
r	r	r	r	r	r	r	r	r	r	r	r	r	r	r	r

Bits 31:28 Reserved, must be kept at reset value.

Bits 27, 23, 19, 15, 11, 7, 3 **TEIFx:** Channel x transfer error flag (x = 1..7)
This bit is set by hardware. It is cleared by software writing 1 to the corresponding bit in the DMA_IFCR register.
0: No transfer error (TE) on channel x
1: A transfer error (TE) occurred on channel x

Bits 26, 22, 18, 14, 10, 6, 2 **HTIFx:** Channel x half transfer flag (x = 1..7)
This bit is set by hardware. It is cleared by software writing 1 to the corresponding bit in the DMA_IFCR register.
0: No half transfer (HT) event on channel x
1: A half transfer (HT) event occurred on channel x

Bits 25, 21, 17, 13, 9, 5, 1 **TCIFx:** Channel x transfer complete flag (x = 1..7)
This bit is set by hardware. It is cleared by software writing 1 to the corresponding bit in the DMA_IFCR register.
0: No transfer complete (TC) event on channel x
1: A transfer complete (TC) event occurred on channel x

Bits 24, 20, 16, 12, 8, 4, 0 **GIFx:** Channel x global interrupt flag (x = 1..7)
This bit is set by hardware. It is cleared by software writing 1 to the corresponding bit in the DMA_IFCR register.
0: No TE, HT or TC event on channel x
1: A TE, HT or TC event occurred on channel x

11.5.2 DMA interrupt flag clear register (DMA_IFCR)

Address offset: 0x04

Reset value: 0x0000 0000

31	30	29	28	27	26	25	24	23	22	21	20	19	18	17	16
Res.	Res.	Res.	Res.	CTEIF7	CHTIF7	CTCIF7	CGIF7	CTEIF6	CHTIF6	CTCIF6	CGIF6	CTEIF5	CHTIF5	CTCIF5	CGIF5
				w	w	w	w	w	w	w	w	w	w	w	w

15	14	13	12	11	10	9	8	7	6	5	4	3	2	1	0
CTEIF4	CHTIF4	CTCIF4	CGIF4	CTEIF3	CHTIF3	CTCIF3	CGIF3	CTEIF2	CHTIF2	CTCIF2	CGIF2	CTEIF1	CHTIF1	CTCIF1	CGIF1
w	w	w	w	w	w	w	w	w	w	w	w	w	w	w	w

Bits 31:28 Reserved, must be kept at reset value.

Bits 27, 23, 19, 15, 11, 7, 3 **CTEIFx:** Channel x transfer error clear (x = 1..7)
This bit is set by software.
0: No effect
1: Clears the corresponding TEIF flag in the DMA_ISR register

Bits 26, 22, 18, 14, 10, 6, 2 **CHTIFx:** Channel x half transfer clear (x = 1..7)
This bit is set by software.
0: No effect
1: Clears the corresponding HTIF flag in the DMA_ISR register

Bits 25, 21, 17, 13, 9, 5, 1 **CTCIFx:** Channel x transfer complete clear (x = 1..7)
This bit is set by software.
0: No effect
1: Clears the corresponding TCIF flag in the DMA_ISR register

Bits 24, 20, 16, 12, 8, 4, 0 **CGIFx:** Channel x global interrupt clear (x = 1..7)
This bit is set by software.
0: No effect
1: Clears the GIF, TEIF, HTIF and TCIF flags in the DMA_ISR register

11.5.3 DMA channel x configuration register (DMA_CCRx) (x = 1..7 , where x = channel number)

Address offset: 0x08 + 0d20 × (channel number – 1)

Reset value: 0x0000 0000

31	30	29	28	27	26	25	24	23	22	21	20	19	18	17	16
Res.	Res.	Res.	Res.	Res.	Res.	Res.	Res.	Res.	Res.	Res.	Res.	Res.	Res.	Res.	Res.

15	14	13	12	11	10	9	8	7	6	5	4	3	2	1	0
Res.	MEM2 MEM	PL[1:0]		MSIZE[1:0]		PSIZE[1:0]		MINC	PINC	CIRC	DIR	TEIE	HTIE	TCIE	EN
	rw	rw	rw	rw	rw	rw	rw	rw	rw	rw	rw	rw	rw	rw	rw

Bits 31:15 Reserved, must be kept at reset value.

Bit 14 **MEM2MEM:** Memory to memory mode
This bit is set and cleared by software.
0: Memory to memory mode disabled
1: Memory to memory mode enabled

Bits 13:12 **PL[1:0]:** Channel priority level
These bits are set and cleared by software.
00: Low
01: Medium
10: High
11: Very high

Bits 11:10 **MSIZE[1:0]:** Memory size
These bits are set and cleared by software.
00: 8-bits
01: 16-bits
10: 32-bits
11: Reserved

Bits 9:8 **PSIZE[1:0]:** Peripheral size
These bits are set and cleared by software.
00: 8-bits
01: 16-bits
10: 32-bits
11: Reserved

Bit 7 **MINC:** Memory increment mode
This bit is set and cleared by software.
0: Memory increment mode disabled
1: Memory increment mode enabled

Bit 6 **PINC:** Peripheral increment mode
This bit is set and cleared by software.
0: Peripheral increment mode disabled
1: Peripheral increment mode enabled

Bit 5 **CIRC:** Circular mode

This bit is set and cleared by software.

0: Circular mode disabled
1: Circular mode enabled

Bit 4 **DIR:** Data transfer direction

This bit is set and cleared by software.

0: Read from peripheral
1: Read from memory

Bit 3 **TEIE:** Transfer error interrupt enable

This bit is set and cleared by software.

0: TE interrupt disabled
1: TE interrupt enabled

Bit 2 **HTIE:** Half transfer interrupt enable

This bit is set and cleared by software.

0: HT interrupt disabled
1: HT interrupt enabled

Bit 1 **TCIE:** Transfer complete interrupt enable

This bit is set and cleared by software.

0: TC interrupt disabled
1: TC interrupt enabled

Bit 0 **EN:** Channel enable

This bit is set and cleared by software.

0: Channel disabled
1: Channel enabled

11.5.4 DMA channel x number of data register (DMA_CNDTRx) (x = 1..7, where x = channel number)

Address offset: 0x0C + 0d20 × (channel number – 1)

Reset value: 0x0000 0000

31	30	29	28	27	26	25	24	23	22	21	20	19	18	17	16
Res.	Res.	Res.	Res.	Res.	Res.	Res.	Res.	Res.	Res.	Res.	Res.	Res.	Res.	Res.	Res.

15	14	13	12	11	10	9	8	7	6	5	4	3	2	1	0
NDT[15:0]															
rw	rw	rw	rw	rw	rw	rw	rw	rw	rw	rw	rw	rw	rw	rw	rw

Bits 31:16 Reserved, must be kept at reset value.

Bits 15:0 **NDT[15:0]:** Number of data to transfer

Number of data to be transferred (0 up to 65535). This register can only be written when the channel is disabled. Once the channel is enabled, this register is read-only, indicating the remaining bytes to be transmitted. This register decrements after each DMA transfer.

Once the transfer is completed, this register can either stay at zero or be reloaded automatically by the value previously programmed if the channel is configured in circular mode.

If this register is zero, no transaction can be served whether the channel is enabled or not.

11.5.5 DMA channel x peripheral address register (DMA_CPARx) (x = 1..7, where x = channel number)

Address offset: 0x10 + 0d20 × (channel number – 1)

Reset value: 0x0000 0000

This register must *not* be written when the channel is enabled.

31	30	29	28	27	26	25	24	23	22	21	20	19	18	17	16
PA [31:16]															
rw	rw	rw	rw	rw	rw	rw	rw	rw	rw	rw	rw	rw	rw	rw	rw

15	14	13	12	11	10	9	8	7	6	5	4	3	2	1	0
PA [15:0]															
rw	rw	rw	rw	rw	rw	rw	rw	rw	rw	rw	rw	rw	rw	rw	rw

Bits 31:0 **PA[31:0]:** Peripheral address

Base address of the peripheral data register from/to which the data will be read/written.

When PSIZE is 01 (16-bit), the PA[0] bit is ignored. Access is automatically aligned to a half-word address.

When PSIZE is 10 (32-bit), PA[1:0] are ignored. Access is automatically aligned to a word address.

11.5.6 DMA channel x memory address register (DMA_CMARx) (x = 1..7, where x = channel number)

Address offset: 0x14 + 0d20 × (channel number – 1)

Reset value: 0x0000 0000

This register must *not* be written when the channel is enabled.

31	30	29	28	27	26	25	24	23	22	21	20	19	18	17	16
MA [31:16]															
rw	rw	rw	rw	rw	rw	rw	rw	rw	rw	rw	rw	rw	rw	rw	rw
15	14	13	12	11	10	9	8	7	6	5	4	3	2	1	0
MA [15:0]															
rw	rw	rw	rw	rw	rw	rw	rw	rw	rw	rw	rw	rw	rw	rw	rw

Bits 31:0 **MA[31:0]:** Memory address

Base address of the memory area from/to which the data will be read/written.

When MSIZE is 01 (16-bit), the MA[0] bit is ignored. Access is automatically aligned to a half-word address.

When MSIZE is 10 (32-bit), MA[1:0] are ignored. Access is automatically aligned to a word address.

11.5.7 DMA1 channel selection register (DMA1_CSELR)

Address offset: 0xA8 (with respect to DMA1 base address)

Reset value: 0x0000 0000

This register is used to manage the mapping of DMA channels (see *Figure 25*).

31	30	29	28	27	26	25	24	23	22	21	20	19	18	17	16
Res.	Res.	Res.	Res.	C7S [3:0]				C6S [3:0]				C5S [3:0]			
				rw	rw	rw	rw	rw	rw	rw	rw	rw	rw	rw	rw

15	14	13	12	11	10	9	8	7	6	5	4	3	2	1	0
C4S [3:0]				C3S [3:0]				C2S [3:0]				C1S [3:0]			
rw	rw	rw	rw	rw	rw	rw	rw	rw	rw	rw	rw	rw	rw	rw	rw

Bits 31:28 Reserved, must be kept at reset value.

Bits 27:24 **C7S[3:0]**: DMA channel 7 selection
0000: Reserved
0001: Reserved
0010: Channel 7 mapped on USART2_TX
0011: Channel 7 mapped on I2C1_RX
0100: Channel 7 mapped on TIM2_CH2/TIM2_CH4
0101: Reserved
0110: Reserved
0111: Channel 7 mapped on TIM1_CH3

Bits 23:20 **C6S[3:0]**: DMA channel 6 selection
0000: Reserved
0001: Reserved
0010: Channel 6 mapped on USART2_RX
0011: Channel 6 mapped on I2C1_TX
0100: Channel 6 mapped on TIM16_CH1/TIM16_UP
0101: Reserved
0110: Reserved
0111: Channel 6 mapped on TIM1_UP
others: Reserved

Bits 19:16 **C5S[3:0]**: DMA channel 5 selection
0000: Reserved
0001: Channel 5 mapped on SPI2_TX
0010: Channel 5 mapped on USART1_RX
0011: Channel 5 mapped on I2C2_RX
0100: Channel 5 mapped on TIM2_CH1
0101: Channel 5 mapped on QUADSPI
0110: Reserved
0111: Channel 5 mapped on TIM15_CH1/TIM15_UP/TIM15_TRIG/TIM15_COM
others: Reserved

Bits 15:12 **C4S[3:0]**: DMA channel 4 selection
0000: Reserved
0001: Channel 4 mapped on SPI2_RX
0010: Channel 4 mapped on USART1_TX
0011: Channel 4 mapped on I2C2_TX
0100: Reserved
0101: Channel 4 mapped on TIM7_UP/DAC2
0110: Reserved
0111: Channel 4 mapped on TIM1_CH4/TIM1_TRIG/TIM1_COM
others: Reserved

Bits 11:8 **C3S[3:0]**: DMA channel 3 selection
0000: Reserved
0001: Channel 3 mapped on SPI1_TX
0010: Channel 3 mapped on USART3_RX
0011: Channel 3 mapped on I2C3_RX
0100: Channel 3 mapped on TIM16_CH1/TIM16_UP
0101: Reserved
0110: Channel 3 mapped on TIM6_UP/DAC1
0111: Channel 3 mapped on TIM1_CH2
others: Reserved

Bits 7:4 **C2S[3:0]**: DMA channel 2 selection
0000: Reserved
0001: Channel 2 mapped on SPI1_RX
0010: Channel 2 mapped on USART3_TX
0011: Channel 2 mapped on I2C3_TX
0100: Channel 2 mapped on TIM2_UP
0101: Reserved
0110: Reserved
0111: Channel 2 mapped on TIM1_CH1
others: Reserved

Bits 3:0 **C1S[3:0]**: DMA channel 1 selection
0000: Channel 1 mapped on ADC1
0001: Reserved
0010: Reserved
0011: Reserved
0100: Channel 1 mapped on TIM2_CH3
0101: Reserved
0110: Reserved
0111: Reserved
others: Reserved

11.5.8 DMA2 channel selection register (DMA2_CSELR)

Address offset: 0xA8 (with respect to DMA2 base address)

Reset value: 0x0000 0000

This register is used to manage the mapping of DMA channels (see *Figure 26*).

31	30	29	28	27	26	25	24	23	22	21	20	19	18	17	16
Res.	Res.	Res.	Res.	C7S [3:0]				C6S [3:0]				C5S [3:0]			
				rw	rw	rw	rw	rw	rw	rw	rw	rw	rw	rw	rw

15	14	13	12	11	10	9	8	7	6	5	4	3	2	1	0
C4S [3:0]				C3S [3:0]				C2S [3:0]				C1S [3:0]			
rw	rw	rw	rw	rw	rw	rw	rw	rw	rw	rw	rw	rw	rw	rw	rw

Bits 31:28 Reserved, must be kept at reset value.

Bits 27:24 **C7S[3:0]**: DMA channel 7 selection
0000: Reserved
0001: Channel 7 mapped on SAI1_B
0010: Channel 7 mapped on USART1_RX
0011: Channel 7 mapped on QUADSPI
0100: Channel 7 mapped on LPUART_RX
0101: Channel 7 mapped on I2C1_TX
others: Reserved

Bits 23:20 **C6S[3:0]**: DMA channel 6 selection
0000: Reserved
0001: Channel 6 mapped on SAI1_A
0010: Channel 6 mapped on USART1_TX
0011: Reserved
0100: Channel 6 mapped on LPUART_TX
0101: Channel 6 mapped on I2C1_RX
others: Reserved

Bits 19:16 **C5S[3:0]**: DMA channel 5 selection
0000: Reserved
0001: Reserved
0010: Reserved
0011: Channel 5 mapped on TIM7_UP/DAC2
0100: Reserved
0101: Reserved
0110: Channel 5 mapped on AES_IN(1)
0111: Channel 5 mapped on SDMMC1
others: Reserved

Bits 15:12 **C4S[3:0]**: DMA channel 4 selection
0000: Reserved
0001: Reserved
0010: Reserved
0011: Channel 4 mapped on TIM6_UP/DAC1
0100: Channel 4 mapped on SPI1_TX
0101: Reserved
0110: Reserved
0111: Channel 4 mapped on SDMMC1
others: Reserved

Bits 11:8 **C3S[3:0]**: DMA channel 3 selection
0000: Channel 3 mapped on ADC1
0001: Reserved
0010: Reserved
0011: Reserved
0100: Channel 3 mapped on SPI1_RX
0101: Reserved
0110: Channel 3 mapped on AES_OUT(1)
0111: Reserved
others: Reserved

Bits 7:4 **C2S[3:0]**: DMA channel 2 selection
0000: Reserved
0001: Channel 2 mapped on SAI1_B
0010: Reserved
0011: Channel 2 mapped on SPI3_TX
0100: Channel 2 mapped on SWPMI1_TX
0101: Reserved
0110: Channel 2 mapped on AES_OUT(1)
others: Reserved

Bits 3:0 **C1S[3:0]**: DMA channel 1 selection
0000: Reserved
0001: Channel 1 mapped on SAI1_A
0010: Reserved
0011: Channel 1 mapped on SPI3_RX
0100: Channel 1 mapped on SWPMI1_RX
0101: Reserved
0110: Channel 1 mapped on AES_IN(1)
others: Reserved

1. Not available for STM32L431xx and STM32L433xx devices.

11.5.9 DMA register map

The following table gives the DMA register map and the reset values.

Table 44. DMA register map and reset values

Offset	Register	31	30	29	28	27	26	25	24	23	22	21	20	19	18	17	16	15	14	13	12	11	10	9	8	7	6	5	4	3	2	1	0
0x00	DMA_ISR	Res.	Res.	Res.	Res.	TEIF7	HTIF7	TCIF7	GIF7	TEIF6	HTIF6	TCIF6	GIF6	TEIF5	HTIF5	TCIF5	GIF5	TEIF4	HTIF4	TCIF4	GIF4	TEIF3	HTIF3	TCIF3	GIF3	TEIF2	HTIF2	TCIF2	GIF2	TEIF1	HTIF1	TCIF1	GIF1
	Reset value					0	0	0	0	0	0	0	0	0	0	0	0	0	0	0	0	0	0	0	0	0	0	0	0	0	0	0	0
0x04	DMA_IFCR	Res.	Res.	Res.	Res.	CTEIF7	CHTIF7	CTCIF7	CGIF7	CTEIF6	CHTIF6	CTCIF6	CGIF6	CTEIF5	CHTIF5	CTCIF5	CGIF5	CTEIF4	CHTIF4	CTCIF4	CGIF4	CTEIF3	CHTIF3	CTCIF3	CGIF3	CTEIF2	CHTIF2	CTCIF2	CGIF2	CTEIF1	CHTIF1	CTCIF1	CGIF1
	Reset value					0	0	0	0	0	0	0	0	0	0	0	0	0	0	0	0	0	0	0	0	0	0	0	0	0	0	0	0
0x08	DMA_CCR1	Res.	Res.	Res.	Res.	Res.	Res.	Res.	Res.	Res.	Res.	Res.	Res.	Res.	Res.	Res.	Res.	Res.	MEM2MEM	PL [1:0]		MSIZE [1:0]		PSIZE [1:0]		MINC	PINC	CIRC	DIR	TEIE	HTIE	TCIE	EN
	Reset value																		0	0	0	0	0	0	0	0	0	0	0	0	0	0	0
0x0C	DMA_CNDTR1	Res.	Res.	Res.	Res.	Res.	Res.	Res.	Res.	Res.	Res.	Res.	Res.	Res.	Res.	Res.	Res.	NDT[15:0]															
	Reset value																	0	0	0	0	0	0	0	0	0	0	0	0	0	0	0	0
0x10	DMA_CPAR1	PA[31:0]																															
	Reset value	0	0	0	0	0	0	0	0	0	0	0	0	0	0	0	0	0	0	0	0	0	0	0	0	0	0	0	0	0	0	0	0
0x14	DMA_CMAR1	MA[31:0]																															
	Reset value	0	0	0	0	0	0	0	0	0	0	0	0	0	0	0	0	0	0	0	0	0	0	0	0	0	0	0	0	0	0	0	0
0x18	Reserved	Res.	Res.	Res.	Res.	Res.	Res.	Res.	Res.	Res.	Res.	Res.	Res.	Res.	Res.	Res.	Res.	Res.	Res.	Res.	Res.	Res.	Res.	Res.	Res.	Res.	Res.	Res.	Res.	Res.	Res.	Res.	Res.
0x1C	DMA_CCR2	Res.	Res.	Res.	Res.	Res.	Res.	Res.	Res.	Res.	Res.	Res.	Res.	Res.	Res.	Res.	Res.	Res.	MEM2MEM	PL [1:0]		MSIZE [1:0]		PSIZE [1:0]		MINC	PINC	CIRC	DIR	TEIE	HTIE	TCIE	EN
	Reset value																		0	0	0	0	0	0	0	0	0	0	0	0	0	0	0
0x20	DMA_CNDTR2	Res.	Res.	Res.	Res.	Res.	Res.	Res.	Res.	Res.	Res.	Res.	Res.	Res.	Res.	Res.	Res.	NDT[15:0]															
	Reset value																	0	0	0	0	0	0	0	0	0	0	0	0	0	0	0	0
0x24	DMA_CPAR2	PA[31:0]																															
	Reset value	0	0	0	0	0	0	0	0	0	0	0	0	0	0	0	0	0	0	0	0	0	0	0	0	0	0	0	0	0	0	0	0
0x28	DMA_CMAR2	MA[31:0]																															
	Reset value	0	0	0	0	0	0	0	0	0	0	0	0	0	0	0	0	0	0	0	0	0	0	0	0	0	0	0	0	0	0	0	0
0x2C	Reserved	Res.	Res.	Res.	Res.	Res.	Res.	Res.	Res.	Res.	Res.	Res.	Res.	Res.	Res.	Res.	Res.	Res.	Res.	Res.	Res.	Res.	Res.	Res.	Res.	Res.	Res.	Res.	Res.	Res.	Res.	Res.	Res.
0x30	DMA_CCR3	Res.	Res.	Res.	Res.	Res.	Res.	Res.	Res.	Res.	Res.	Res.	Res.	Res.	Res.	Res.	Res.	Res.	MEM2MEM	PL [1:0]		MSIZE [1:0]		PSIZE [1:0]		MINC	PINC	CIRC	DIR	TEIE	HTIE	TCIE	EN
	Reset value																		0	0	0	0	0	0	0	0	0	0	0	0	0	0	0
0x34	DMA_CNDTR3	Res.	Res.	Res.	Res.	Res.	Res.	Res.	Res.	Res.	Res.	Res.	Res.	Res.	Res.	Res.	Res.	NDT[15:0]															
	Reset value																	0	0	0	0	0	0	0	0	0	0	0	0	0	0	0	0
0x38	DMA_CPAR3	PA[31:0]																															
	Reset value	0	0	0	0	0	0	0	0	0	0	0	0	0	0	0	0	0	0	0	0	0	0	0	0	0	0	0	0	0	0	0	0
0x3C	DMA_CMAR3	MA[31:0]																															
	Reset value	0	0	0	0	0	0	0	0	0	0	0	0	0	0	0	0	0	0	0	0	0	0	0	0	0	0	0	0	0	0	0	0

Table 44. DMA register map and reset values (continued)

Offset	Register	31	30	29	28	27	26	25	24	23	22	21	20	19	18	17	16	15	14	13	12	11	10	9	8	7	6	5	4	3	2	1	0
0x40	Reserved	Res.	Res.	Res.	Res.	Res.	Res.	Res.	Res.	Res.	Res.	Res.	Res.	Res.	Res.	Res.	Res.	Res.	Res.	Res.	Res.	Res.	Res.	Res.	Res.	Res.	Res.	Res.	Res.	Res.	Res.	Res.	Res.
0x44	**DMA_CCR4**	Res.	Res.	Res.	Res.	Res.	Res.	Res.	Res.	Res.	Res.	Res.	Res.	Res.	Res.	Res.	Res.	Res.	MEM2MEM	PL [1:0]		MSIZE [1:0]		PSIZE [1:0]		MINC	PINC	CIRC	DIR	TEIE	HTIE	TCIE	EN
	Reset value																		0	0	0	0	0	0	0	0	0	0	0	0	0	0	0
0x48	**DMA_CNDTR4**	Res.	Res.	Res.	Res.	Res.	Res.	Res.	Res.	Res.	Res.	Res.	Res.	Res.	Res.	Res.	Res.	NDT[15:0]															
	Reset value																	0	0	0	0	0	0	0	0	0	0	0	0	0	0	0	0
0x4C	**DMA_CPAR4**	PA[31:0]																															
	Reset value	0	0	0	0	0	0	0	0	0	0	0	0	0	0	0	0	0	0	0	0	0	0	0	0	0	0	0	0	0	0	0	0
0x50	**DMA_CMAR4**	MA[31:0]																															
	Reset value	0	0	0	0	0	0	0	0	0	0	0	0	0	0	0	0	0	0	0	0	0	0	0	0	0	0	0	0	0	0	0	0
0x54	Reserved	Res.	Res.	Res.	Res.	Res.	Res.	Res.	Res.	Res.	Res.	Res.	Res.	Res.	Res.	Res.	Res.	Res.	Res.	Res.	Res.	Res.	Res.	Res.	Res.	Res.	Res.	Res.	Res.	Res.	Res.	Res.	Res.
0x58	**DMA_CCR5**	Res.	Res.	Res.	Res.	Res.	Res.	Res.	Res.	Res.	Res.	Res.	Res.	Res.	Res.	Res.	Res.	Res.	MEM2MEM	PL [1:0]		MSIZE [1:0]		PSIZE [1:0]		MINC	PINC	CIRC	DIR	TEIE	HTIE	TCIE	EN
	Reset value																		0	0	0	0	0	0	0	0	0	0	0	0	0	0	0
0x5C	**DMA_CNDTR5**	Res.	Res.	Res.	Res.	Res.	Res.	Res.	Res.	Res.	Res.	Res.	Res.	Res.	Res.	Res.	Res.	NDT[15:0]															
	Reset value																	0	0	0	0	0	0	0	0	0	0	0	0	0	0	0	0
0x60	**DMA_CPAR5**	PA[31:0]																															
	Reset value	0	0	0	0	0	0	0	0	0	0	0	0	0	0	0	0	0	0	0	0	0	0	0	0	0	0	0	0	0	0	0	0
0x64	**DMA_CMAR5**	MA[31:0]																															
	Reset value	0	0	0	0	0	0	0	0	0	0	0	0	0	0	0	0	0	0	0	0	0	0	0	0	0	0	0	0	0	0	0	0
0x68	Reserved	Res.	Res.	Res.	Res.	Res.	Res.	Res.	Res.	Res.	Res.	Res.	Res.	Res.	Res.	Res.	Res.	Res.	Res.	Res.	Res.	Res.	Res.	Res.	Res.	Res.	Res.	Res.	Res.	Res.	Res.	Res.	Res.
0x6C	**DMA_CCR6**	Res.	Res.	Res.	Res.	Res.	Res.	Res.	Res.	Res.	Res.	Res.	Res.	Res.	Res.	Res.	Res.	Res.	MEM2MEM	PL [1:0]		MSIZE [1:0]		PSIZE [1:0]		MINC	PINC	CIRC	DIR	TEIE	HTIE	TCIE	EN
	Reset value																		0	0	0	0	0	0	0	0	0	0	0	0	0	0	0
0x70	**DMA_CNDTR6**	Res.	Res.	Res.	Res.	Res.	Res.	Res.	Res.	Res.	Res.	Res.	Res.	Res.	Res.	Res.	Res.	NDT[15:0]															
	Reset value																	0	0	0	0	0	0	0	0	0	0	0	0	0	0	0	0
0x74	**DMA_CPAR6**	PA[31:0]																															
	Reset value	0	0	0	0	0	0	0	0	0	0	0	0	0	0	0	0	0	0	0	0	0	0	0	0	0	0	0	0	0	0	0	0
0x78	**DMA_CMAR6**	MA[31:0]																															
	Reset value	0	0	0	0	0	0	0	0	0	0	0	0	0	0	0	0	0	0	0	0	0	0	0	0	0	0	0	0	0	0	0	0
0x7C	Reserved	Res.	Res.	Res.	Res.	Res.	Res.	Res.	Res.	Res.	Res.	Res.	Res.	Res.	Res.	Res.	Res.	Res.	Res.	Res.	Res.	Res.	Res.	Res.	Res.	Res.	Res.	Res.	Res.	Res.	Res.	Res.	Res.
0x80	**DMA_CCR7**	Res.	Res.	Res.	Res.	Res.	Res.	Res.	Res.	Res.	Res.	Res.	Res.	Res.	Res.	Res.	Res.	Res.	MEM2MEM	PL [1:0]		MSIZE [1:0]		PSIZE [1:0]		MINC	PINC	CIRC	DIR	TEIE	HTIE	TCIE	EN
	Reset value																		0	0	0	0	0	0	0	0	0	0	0	0	0	0	0
0x84	**DMA_CNDTR7**	Res.	Res.	Res.	Res.	Res.	Res.	Res.	Res.	Res.	Res.	Res.	Res.	Res.	Res.	Res.	Res.	NDT[15:0]															
	Reset value																	0	0	0	0	0	0	0	0	0	0	0	0	0	0	0	0

Table 44. DMA register map and reset values (continued)

Offset	Register	31	30	29	28	27	26	25	24	23	22	21	20	19	18	17	16	15	14	13	12	11	10	9	8	7	6	5	4	3	2	1	0
0x88	**DMA_CPAR7**	PA[31:0]																															
	Reset value	0	0	0	0	0	0	0	0	0	0	0	0	0	0	0	0	0	0	0	0	0	0	0	0	0	0	0	0	0	0	0	0
0x8C	**DMA_CMAR7**	MA[31:0]																															
	Reset value	0	0	0	0	0	0	0	0	0	0	0	0	0	0	0	0	0	0	0	0	0	0	0	0	0	0	0	0	0	0	0	0
0x90 - 0xA7	Reserved	Res.	Res.	Res.	Res.	Res.	Res.	Res.	Res.	Res.	Res.	Res.	Res.	Res.	Res.	Res.	Res.	Res.	Res.	Res.	Res.	Res.	Res.	Res.	Res.	Res.	Res.	Res.	Res.	Res.	Res.	Res.	Res.
0xA8	**DMA_CSELR**	Res.	Res.	Res.	Res.	C7S[3:0]				C6S[3:0]				C5S[3:0]				C4S[3:0]				C3S[3:0]				C2S[3:0]				C1S[3:0]			
	Reset value					0	0	0	0	0	0	0	0	0	0	0	0	0	0	0	0	0	0	0	0	0	0	0	0	0	0	0	0

Refer to *Section 2.2.2 on page 62* for the register boundary addresses.

12 Nested vectored interrupt controller (NVIC)

12.1 NVIC main features

- 67 maskable interrupt channels (not including the sixteen Cortex®-M4 with FPU interrupt lines)
- 16 programmable priority levels (4 bits of interrupt priority are used)
- Low-latency exception and interrupt handling
- Power management control
- Implementation of System Control Registers

The NVIC and the processor core interface are closely coupled, which enables low latency interrupt processing and efficient processing of late arriving interrupts.

All interrupts including the core exceptions are managed by the NVIC. For more information on exceptions and NVIC programming, refer to the PM0214 programming manual for Cortex™-M4 products.

12.2 SysTick calibration value register

The SysTick calibration value is set to 0x100270F, which gives a reference time base of 1 ms with the SysTick clock set to 10 MHz (max $f_{HCLK}/8$).

12.3 Interrupt and exception vectors

Table 45. STM32L431/433/443 vector table

Position	Priority	Type of priority	Acronym	Description	Address
-	-	-	-	Reserved	0x0000 0000
-	-3	fixed	Reset	Reset	0x0000 0004
-	-2	fixed	NMI	Non maskable interrupt. The RCC Clock Security System (CSS) is linked to the NMI vector.	0x0000 0008
-	-1	fixed	HardFault	All classes of fault	0x0000 000C
-	0	settable	MemManage	Memory management	0x0000 0010
-	1	settable	BusFault	Pre-fetch fault, memory access fault	0x0000 0014
-	2	settable	UsageFault	Undefined instruction or illegal state	0x0000 0018
-	-	-	-	Reserved	0x0000 001C - 0x0000 0028
-	3	settable	SVCall	System service call via SWI instruction	0x0000 002C
-	4	settable	Debug	Monitor	0x0000 0030
-	-	-	-	Reserved	0x0000 0034
-	5	settable	PendSV	Pendable request for system service	0x0000 0038
-	6	settable	SysTick	System tick timer	0x0000 003C
0	7	settable	WWDG	Window Watchdog interrupt	0x0000 0040
1	8	settable	PVD_PVM	PVD/PVM1/PVM2/PVM3/PVM4 through EXTI lines 16/35/36/37/38 interrupts	0x0000 0044
2	9	settable	RTC_TAMP_STAMP /CSS_LSE	RTC Tamper or TimeStamp /CSS on LSE through EXTI line 19 interrupts	0x0000 0048
3	10	settable	RTC_WKUP	RTC Wakeup timer through EXTI line 20 interrupt	0x0000 004C
4	11	settable	FLASH	Flash global interrupt	0x0000 0050
5	12	settable	RCC	RCC global interrupt	0x0000 005C
6	13	settable	EXTI0	EXTI Line0 interrupt	0x0000 005C
7	14	settable	EXTI1	EXTI Line1 interrupt	0x0000 005C
8	15	settable	EXTI2	EXTI Line2 interrupt	0x0000 0060
9	16	settable	EXTI3	EXTI Line3 interrupt	0x0000 0064
10	17	settable	EXTI4	EXTI Line4 interrupt	0x0000 0068
11	18	settable	DMA1_CH1	DMA1 channel 1 interrupt	0x0000 006C
12	19	settable	DMA1_CH2	DMA1 channel 2 interrupt	0x0000 0070
13	20	settable	DMA1_CH3	DMA1 channel 3 interrupt	0x0000 0074

Table 45. STM32L431/433/443 vector table (continued)

Position	Priority	Type of priority	Acronym	Description	Address
14	21	settable	DMA1_CH4	DMA1 channel 4 interrupt	0x0000 0078
15	22	settable	DMA1_CH5	DMA1 channel 5 interrupt	0x0000 007C
16	23	settable	DMA1_CH6	DMA1 channel 6 interrupt	0x0000 0080
17	24	settable	DMA1_CH7	DMA1 channel 7 interrupt	0x0000 0084
18	25	settable	ADC1	ADC1 global interrupt	0x0000 0088
19	26	settable	CAN1_TX	CAN1_TX interrupts	0x0000 008C
20	27	settable	CAN1_RX0	CAN1_RX0 interrupts	0x0000 0090
21	28	settable	CAN1_RX1	CAN1_RX1 interrupt	0x0000 0094
22	29	settable	CAN1_SCE	CAN1_SCE interrupt	0x0000 0098
23	30	settable	EXTI9_5	EXTI Line[9:5] interrupts	0x0000 009C
24	31	settable	TIM1_BRK/TIM15	TIM1 Break/TIM15 global interrupts	0x0000 00A0
25	32	settable	TIM1_UP/TIM16	TIM1 Update/TIM16 global interrupts	0x0000 00A4
26	33	settable	TIM1_TRG_COM	TIM1 trigger and commutation interrupt	0x0000 00A8
27	34	settable	TIM1_CC	TIM1 capture compare interrupt	0x0000 00AC
28	35	settable	TIM2	TIM2 global interrupt	0x0000 00B0
29	36	settable	-	Reserved	0x0000 00B4
30	37	settable	-	Reserved	0x0000 00B8
31	38	settable	I2C1_EV	I2C1 event interrupt	0x0000 00BC
32	39	settable	I2C1_ER	I2C1 error interrupt	0x0000 00C0
33	40	settable	I2C2_EV	I2C2 event interrupt	0x0000 00C4
34	41	settable	I2C2_ER	I2C2 error interrupt	0x0000 00C8
35	42	settable	SPI1	SPI1 global interrupt	0x0000 00CC
36	43	settable	SPI2	SPI2 global interrupt	0x0000 00D0
37	44	settable	USART1	USART1 global interrupt	0x0000 00D4
38	45	settable	USART2	USART2 global interrupt	0x0000 00D8
39	46	settable	USART3	USART3 global interrupt	0x0000 00DC
40	47	settable	EXTI15_10	EXTI Line[15:10] interrupts	0x0000 00E0
41	48	settable	RTC_ALARM	RTC alarms through EXTI line 18 interrupts	0x0000 00E4
42	49	settable	-	Reserved	0x0000 00E8
43	50	settable	-	Reserved	0x0000 00EC
44	51	settable	-	Reserved	0x0000 00F0
45	52	settable	-	Reserved	0x0000 00F4
46	53	settable	-	Reserved	0x0000 00F8

Table 45. STM32L431/433/443 vector table (continued)

Position	Priority	Type of priority	Acronym	Description	Address
47	54	settable	-	Reserved	0x0000 00FC
48	55	settable	-	Reserved	0x0000 0100
49	56	settable	SDMMC1	SDMMC1 global interrupt	0x0000 0104
50	57	settable	-	Reserved	0x0000 0108
51	58	settable	SPI3	SPI3 global interrupt	0x0000 010C
52	59	settable	-	Reserved	0x0000 0110
53	60	settable	-	Reserved	0x0000 0114
54	61	settable	TIM6_DACUNDER	TIM6 global and DAC12 underrun interrupts	0x0000 0118
55	62	settable	TIM7	TIM7 global interrupt	0x0000 011C
56	63	settable	DMA2_CH1	DMA2 channel 1 interrupt	0x0000 0120
57	64	settable	DMA2_CH2	DMA2 channel 2 interrupt	0x0000 0124
58	65	settable	DMA2_CH3	DMA2 channel 3 interrupt	0x0000 0128
59	66	settable	DMA2_CH4	DMA2 channel 4 interrupt	0x0000 012C
60	67	settable	DMA2_CH5	DMA2 channel 5 interrupt	0x0000 0130
61	68	settable	-	Reserved	0x0000 0134
62	69	settable	-	Reserved	0x0000 0138
63	70	settable	-	Reserved	0x0000 013C
64	71	settable	COMP	COMP1/COMP2 through EXTI lines 21/22 interrupts	0x0000 0140
65	72	settable	LPTIM1	LPTIM1 global interrupt	0x0000 0144
66	73	settable	LPTIM2	LPTIM2 global interrupt	0x0000 0148
67	74	settable	USB_FS(1)	USB event interrupt through EXTI line 17	0x0000 014C
68	75	settable	DMA2_CH6	DMA2 channel 6 interrupt	0x0000 0150
69	76	settable	DMA2_CH7	DMA2 channel 7 interrupt	0x0000 0154
70	77	settable	LPUART1	LPUART1 global interrupt	0x0000 0158
71	78	settable	QUADSPI	QUADSPI global interrupt	0x0000 015C
72	79	settable	I2C3_EV	I2C3 event interrupt	0x0000 0160
73	79	settable	I2C3_ER	I2C3 error interrupt	0x0000 0164
74	80	settable	SAI1	SAI1 global interrupt	0x0000 0168
75	74	settable	-	Reserved	0x0000 016C
76	75	settable	SWPMI1	SWPMI1 global interrupt	0x0000 0170
77	76	settable	TSC	TSC global interrupt	0x0000 0174

Table 45. STM32L431/433/443 vector table (continued)

Position	Priority	Type of priority	Acronym	Description	Address
78	77	settable	LCD[(1)]	LCD global interrupt	0x0000 0178
79	78	settable	AES[(2)]	AES global interrupt	0x0000 017C
80	79	settable	RNG	RNG global interrupt	0x0000 0180
81	88	settable	FPU	Floating point interrupt	0x0000 0184
82	89	settable	CRS	CRS interrupt	0x0000 0188

1. Not available for STM32L431xx devices.
2. Not available for STM32L431xx and STM32L433xx devices.

13 Extended interrupts and events controller (EXTI)

13.1 Introduction

The EXTI main features are as follows:

- Generation of up to 37 event/interrupt requests
  - 25 configurable lines
  - 12 direct lines
- Independent mask on each event/interrupt line
- Configurable rising or falling edge (configurable lines only)
- Dedicated status bit (configurable lines only)
- Emulation of event/interrupt requests (configurable lines only)

13.2 EXTI main features

The extended interrupts and events controller (EXTI) manages the external and internal asynchronous events/interrupts and generates the event request to the CPU/Interrupt Controller and a wake-up request to the Power Controller.

The EXTI allows the management of up to 38 event lines which can wake up from the Stop 0 and Stop 1 modes. Not all events can wake up from the Stop 2 mode (refer to *Table 46: EXTI lines connections*).

The lines are either configurable or direct:

- The lines are configurable: the active edge can be chosen independently, and a status flag indicates the source of the interrupt. The configurable lines are used by the I/Os external interrupts, and by few peripherals.
- The lines are direct: they are used by some peripherals to generate a wakeup from Stop event or interrupt. The status flag is provided by the peripheral.

Each line can be masked independently for an interrupt or an event generation.

This controller also allows to emulate events or interrupts by software, multiplexed with the corresponding hardware event line, by writing to a dedicated register.

13.3 EXTI functional description

For the configurable interrupt lines, the interrupt line should be configured and enabled in order to generate an interrupt. This is done by programming the two trigger registers with the desired edge detection and by enabling the interrupt request by writing a ‘1’ to the corresponding bit in the interrupt mask register. When the selected edge occurs on the interrupt line, an interrupt request is generated. The pending bit corresponding to the interrupt line is also set. This request is cleared by writing a ‘1’ in the pending register.

For the direct interrupt lines, the interrupt is enabled by default in the interrupt mask register and there is no corresponding pending bit in the pending register.

To generate an event, the event line should be configured and enabled. This is done by programming the two trigger registers with the desired edge detection and by enabling the event request by writing a ‘1’ to the corresponding bit in the event mask register. When the

selected edge occurs on the event line, an event pulse is generated. The pending bit corresponding to the event line is not set.

For the configurable lines, an interrupt/event request can also be generated by software by writing a ‘1’ in the software interrupt/event register.

Note: The interrupts or events associated to the direct lines are triggered only when the system is in Stop mode. If the system is still running, no interrupt/event is generated by the EXTI.

13.3.1 EXTI block diagram

The extended interrupt/event block diagram is shown on *Figure 27*.

Figure 27. Configurable interrupt/event block diagram

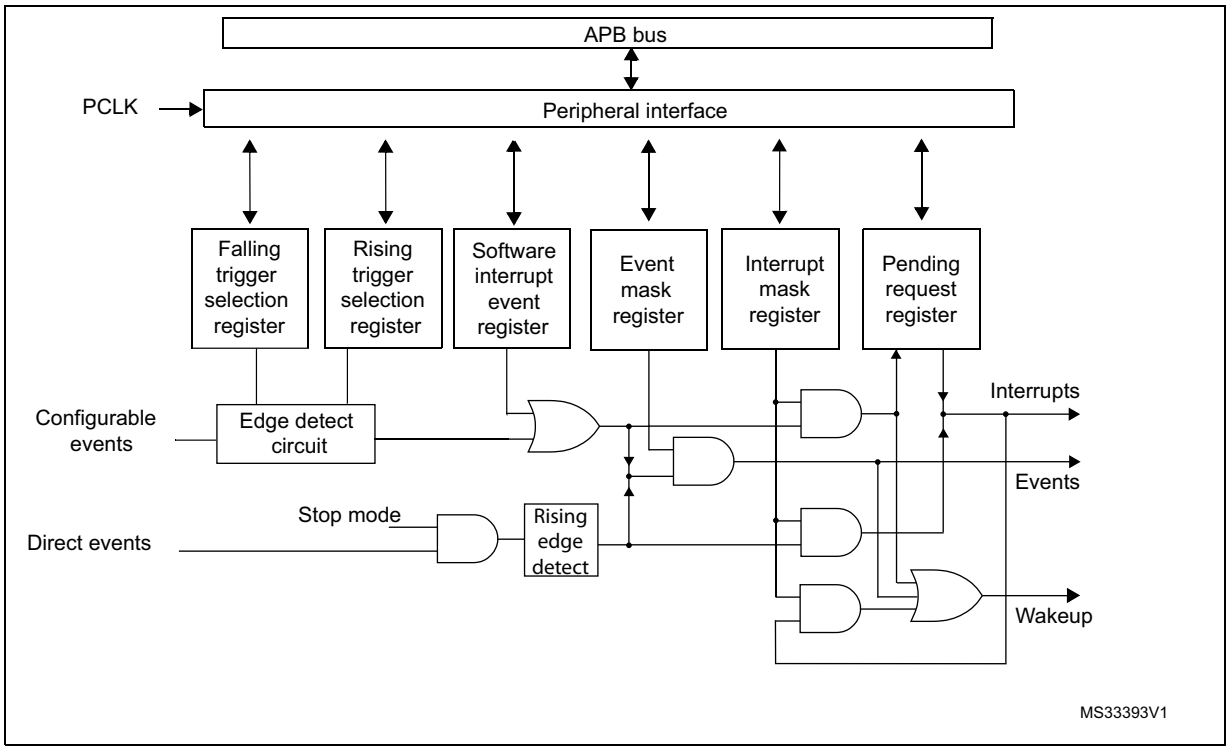

13.3.2 Wakeup event management

The STM32L431/433/443 is able to handle external or internal events in order to wake up the core (WFE). The wakeup event can be generated either by:

- enabling an interrupt in the peripheral control register but not in the NVIC, and enabling the SEVONPEND bit in the Cortex™-M4 System Control register. When the MCU resumes from WFE, the EXTI peripheral interrupt pending bit and the peripheral NVIC IRQ channel pending bit (in the NVIC interrupt clear pending register) have to be cleared
- or by configuring an EXTI line in event mode. When the CPU resumes from WFE, it is not necessary to clear the peripheral interrupt pending bit or the NVIC IRQ channel pending bit as the pending bit corresponding to the event line is not set.

13.3.3 Peripherals asynchronous Interrupts

Some peripherals are able to generate events when the system is in run mode and also when the system is in Stop mode, allowing to wake up the system from Stop mode.

To accomplish this, the peripheral generates both a synchronized (to the system clock, e.g. APB clock) and an asynchronous version of the event. This asynchronous event is connected to an EXTI direct line.

Note: Few peripherals with wakeup from Stop capability are connected to an EXTI configurable line. In this case, the EXTI configuration is necessary to allow the wakeup from Stop mode.

13.3.4 Hardware interrupt selection

To configure a line as an interrupt source, use the following procedure:

1. Configure the corresponding mask bit in the EXTI_IMR register.
2. Configure the Trigger Selection bits of the Interrupt line (EXTI_RTSR and EXTI_FTSR).
3. Configure the enable and mask bits that control the NVIC IRQ channel mapped to the EXTI so that an interrupt coming from one of the EXTI lines can be correctly acknowledged.

Note: The direct lines do not require any EXTI configuration.

13.3.5 Hardware event selection

To configure a line as an event source, use the following procedure:

1. Configure the corresponding mask bit in the EXTI_EMR register.
2. Configure the Trigger Selection bits of the Event line (EXTI_RTSR and EXTI_FTSR).

13.3.6 Software interrupt/event selection

Any of the configurable lines can be configured as a software interrupt/event line. The procedure to generate a software interrupt is as follows:

1. Configure the corresponding mask bit (EXTI_IMR, EXTI_EMR).
2. Set the required bit of the software interrupt register (EXTI_SWIER).

13.4 EXTI interrupt/event line mapping

In the STM32L431/433/443, 38 interrupt/event lines are available. The GPIOs are connected to 16 configurable interrupt/event lines (see *Figure 28*).

Figure 28. External interrupt/event GPIO mapping

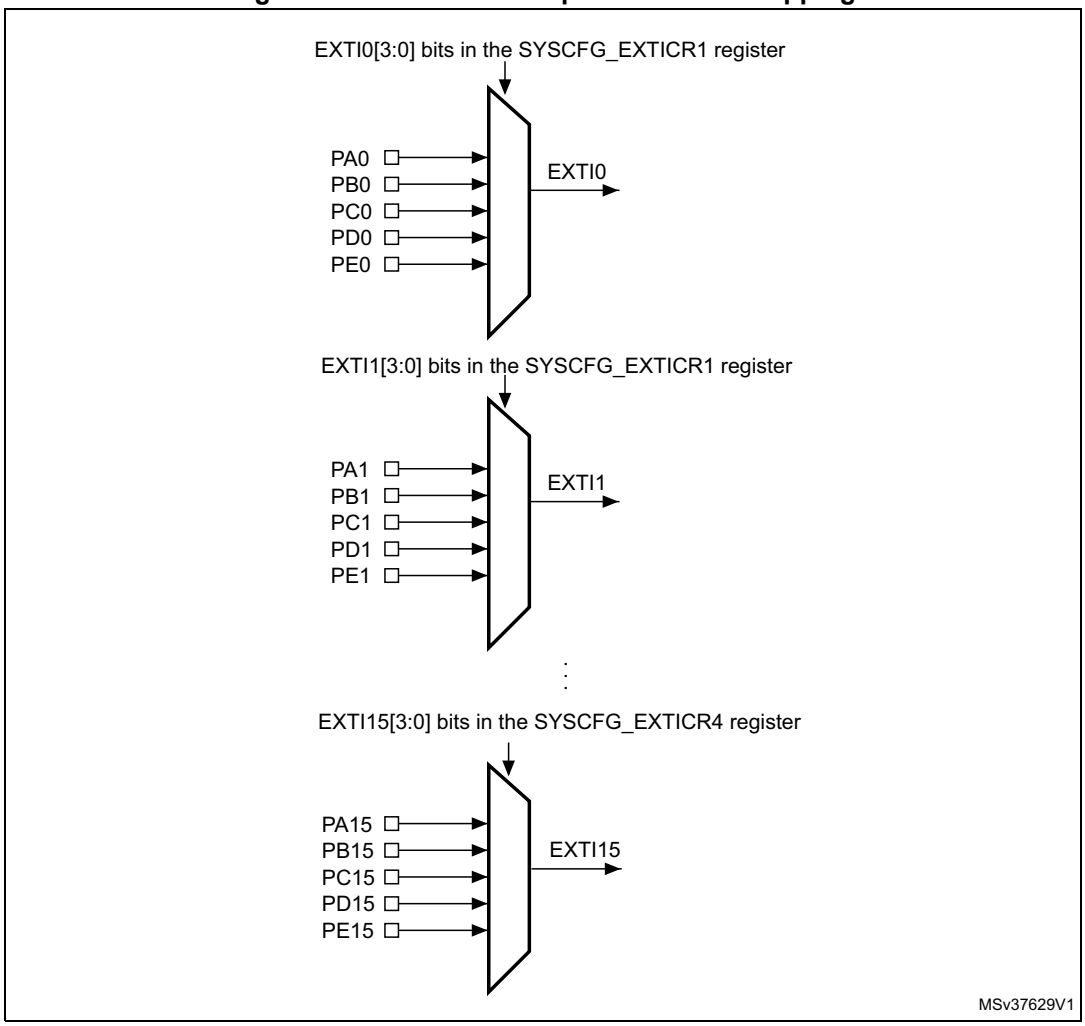

The 38 lines are connected as shown in *Table 46: EXTI lines connections*.

Table 46. EXTI lines connections

EXTI line	Line source(1)	Line type
0-15	GPIO	configurable
16	PVD	configurable
17	USB_FS wakeup event(3)(2)	direct
18	RTC alarms	configurable
19	RTC tamper or timestamp or CSS_LSE	configurable
20	RTC wakeup timer	configurable
21	COMP1 output	configurable
22	COMP2 output	configurable
23	I2C1 wakeup(3)	direct

Table 46. EXTI lines connections (continued)

EXTI line	Line source[1]	Line type
24	I2C2 wakeup[3]	direct
25	I2C3 wakeup	direct
26	USART1 wakeup[3]	direct
27	USART2 wakeup[3]	direct
28	USART3 wakeup[3]	direct
29	-	-
30	-	-
31	LPUART1 wakeup	direct
32	LPTIM1	direct
33	LPTIM2[3]	direct
34	SWPMI1 wakeup[3]	direct
35	PVM1 wakeup	configurable
36	-	-
37	PVM3 wakeup	configurable
38	PVM4 wakeup	configurable
39	LCD wakeup[2]	direct

1. All the lines can wake up from the Stop 0 and Stop 1 modes. All the lines, except the ones mentioned above, can wake up from the Stop 2 mode.
2. Not available for STM32L431xx devices.
3. This line source cannot wake up from the Stop 2 mode.

13.5 EXTI registers

Refer to *Section 1.1 on page 55* for a list of abbreviations used in register descriptions.

The peripheral registers have to be accessed by words (32-bit).

13.5.1 Interrupt mask register 1 (EXTI_IMR1)

Address offset: 0x00

Reset value: 0xFF82 0000

31	30	29	28	27	26	25	24	23	22	21	20	19	18	17	16
IM31	Res.	Res.	IM28	IM27	IM26	IM25	IM24	IM23	IM22	IM21	IM20	IM19	IM18	IM17	IM16
rw			rw	rw	rw	rw	rw	rw	rw	rw	rw	rw	rw	rw	rw
15	14	13	12	11	10	9	8	7	6	5	4	3	2	1	0
IM15	IM14	IM13	IM12	IM11	IM10	IM9	IM8	IM7	IM6	IM5	IM4	IM3	IM2	IM1	IM0
rw	rw	rw	rw	rw	rw	rw	rw	rw	rw	rw	rw	rw	rw	rw	rw

Bit 31 **IM31:** Interrupt Mask on line 31
0: Interrupt request from Line 31 is masked
1: Interrupt request from Line 31 is not masked

Bits 30:29 Reserved, must be kept at reset value.

Bits 28:0 **IMx:** Interrupt Mask on line x (x = 28 to 0)
0: Interrupt request from Line x is masked
1: Interrupt request from Line x is not masked

Note: The reset value for the direct lines (line 17, lines from 23 to 34, line 39) is set to '1' in order to enable the interrupt by default.

13.5.2 Event mask register 1 (EXTI_EMR1)

Address offset: 0x04

Reset value: 0x0000 0000

31	30	29	28	27	26	25	24	23	22	21	20	19	18	17	16
EM31	Res.	Res.	EM28	EM27	EM26	EM25	EM24	EM23	EM22	EM21	EM20	EM19	EM18	EM17	EM16
rw			rw	rw	rw	rw	rw	rw	rw	rw	rw	rw	rw	rw	rw
15	14	13	12	11	10	9	8	7	6	5	4	3	2	1	0
EM15	EM14	EM13	EM12	EM11	EM10	EM9	EM8	EM7	EM6	EM5	EM4	EM3	EM2	EM1	EM0
rw	rw	rw	rw	rw	rw	rw	rw	rw	rw	rw	rw	rw	rw	rw	rw

Bit 31 **EM31:** Event mask on line 31
0: Event request from line 31 is masked
1: Event request from line 31 is not masked

Bits 30:29 Reserved, must be kept at reset value.

Bits 28:0 **EMx:** Event mask on line x (x = 28 to 0)
0: Event request from line x is masked
1: Event request from line x is not masked

13.5.3 Rising trigger selection register 1 (EXTI_RTSR1)

Address offset: 0x08

Reset value: 0x0000 0000

31	30	29	28	27	26	25	24	23	22	21	20	19	18	17	16
Res.	Res.	Res.	Res.	Res.	Res.	Res.	Res.	Res.	RT22	RT21	RT20	RT19	RT18	Res.	RT16
									rw	rw	rw	rw	rw		rw
15	14	13	12	11	10	9	8	7	6	5	4	3	2	1	0
RT15	RT14	RT13	RT12	RT11	RT10	RT9	RT8	RT7	RT6	RT5	RT4	RT3	RT2	RT1	RT0
rw	rw	rw	rw	rw	rw	rw	rw	rw	rw	rw	rw	rw	rw	rw	rw

Bits 31:23 Reserved, must be kept at reset value.

Bits 22:18 **RTx:** Rising trigger event configuration bit of line x (x = 22 to 18)
0: Rising trigger disabled (for Event and Interrupt) for input line
1: Rising trigger enabled (for Event and Interrupt) for input line

Bit 17 Reserved, must be kept at reset value.

Bits 16:0 **RTx:** Rising trigger event configuration bit of line x (x = 16 to 0)
0: Rising trigger disabled (for Event and Interrupt) for input line
1: Rising trigger enabled (for Event and Interrupt) for input line

Note: The configurable wakeup lines are edge-triggered. No glitch must be generated on these lines. If a rising edge on a configurable interrupt line occurs during a write operation in the EXTI_RTSR register, the pending bit is not set.

Rising and falling edge triggers can be set for the same interrupt line. In this case, both generate a trigger condition.

13.5.4 Falling trigger selection register 1 (EXTI_FTSR1)

Address offset: 0x0C

Reset value: 0x0000 0000

31	30	29	28	27	26	25	24	23	22	21	20	19	18	17	16
Res.	Res.	Res.	Res.	Res.	Res.	Res.	Res.	Res.	FT22	FT21	FT20	FT19	FT18	Res.	FT16
									rw	rw	rw	rw	rw		rw
15	14	13	12	11	10	9	8	7	6	5	4	3	2	1	0
FT15	FT14	FT13	FT12	FT11	FT10	FT9	FT8	FT7	FT6	FT5	FT4	FT3	FT2	FT1	FT0
rw	rw	rw	rw	rw	rw	rw	rw	rw	rw	rw	rw	rw	rw	rw	rw

Bits 31:23 Reserved, must be kept at reset value.

Bits 22:18 **FTx:** Falling trigger event configuration bit of line x (x = 22 to 18)
0: Falling trigger disabled (for Event and Interrupt) for input line
1: Falling trigger enabled (for Event and Interrupt) for input line

Bit 17 Reserved, must be kept at reset value.

Bits 16:0 **FTx:** Falling trigger event configuration bit of line x (x = 16 to 0)
0: Falling trigger disabled (for Event and Interrupt) for input line
1: Falling trigger enabled (for Event and Interrupt) for input line

Note: The configurable wakeup lines are edge-triggered. No glitch must be generated on these lines. If a falling edge on a configurable interrupt line occurs during a write operation to the EXTI_FTSR register, the pending bit is not set.

Rising and falling edge triggers can be set for the same interrupt line. In this case, both generate a trigger condition.

13.5.5 Software interrupt event register 1 (EXTI_SWIER1)

Address offset: 0x10

Reset value: 0x0000 0000

31	30	29	28	27	26	25	24	23	22	21	20	19	18	17	16
Res.	Res.	Res.	Res.	Res.	Res.	Res.	Res.	Res.	SWI 22	SWI 21	SWI 20	SWI 19	SWI 18	Res.	SWI 16
									rw	rw	rw	rw	rw		rw
15	14	13	12	11	10	9	8	7	6	5	4	3	2	1	0
SWI 15	SWI 14	SWI 13	SWI 12	SWI 11	SWI 10	SWI 9	SWI 8	SWI 7	SWI 6	SWI 5	SWI 4	SWI 3	SWI 2	SWI 1	SWI 0
rw	rw	rw	rw	rw	rw	rw	rw	rw	rw	rw	rw	rw	rw	rw	rw

Bits 31:23 Reserved, must be kept at reset value.

Bits 22: 18 **SWIx:** Software interrupt on line x (x = 22 o 18)
If the interrupt is enabled on this line in the EXTI_IMR, writing a '1' to this bit when it is at '0' sets the corresponding pending bit in EXTI_PR resulting in an interrupt request generation.
This bit is cleared by clearing the corresponding bit in the EXTI_PR register (by writing a ‘1’ into the bit).

Bit 17 Reserved, must be kept at reset value.

Bits 16:0 **SWIx:** Software interrupt on line x (x = 16 to 0)
If the interrupt is enabled on this line in the EXTI_IMR, writing a '1' to this bit when it is at '0' sets the corresponding pending bit in EXTI_PR resulting in an interrupt request generation.
This bit is cleared by clearing the corresponding bit of EXTI_PR (by writing a ‘1’ into the bit).

13.5.6 Pending register 1 (EXTI_PR1)

Address offset: 0x14

Reset value: undefined

31	30	29	28	27	26	25	24	23	22	21	20	19	18	17	16
Res.	Res.	Res.	Res.	Res.	Res.	Res.	Res.	Res.	PIF22	PIF21	PIF20	PIF19	PIF18	Res.	PIF16
									rc_w1	rc_w1	rc_w1	rc_w1	rc_w1		rc_w1

15	14	13	12	11	10	9	8	7	6	5	4	3	2	1	0
PIF15	PIF14	PIF13	PIF12	PIF11	PIF10	PIF9	PIF8	PIF7	PIF6	PIF5	PIF4	PIF3	PIF2	PIF1	PIF0
rc_w1	rc_w1	rc_w1	rc_w1	rc_w1	rc_w1	rc_w1	rc_w1	rc_w1	rc_w1	rc_w1	rc_w1	rc_w1	rc_w1	rc_w1	rc_w1

Bits 31:23 Reserved, must be kept at reset value.

Bits 22:18 **PIFx:** Pending interrupt flag on line x (x = 22 to 18)
0: No trigger request occurred
1: Selected trigger request occurred
This bit is set when the selected edge event arrives on the interrupt line. This bit is cleared by writing a ‘1’ to the bit.

Bit 17 Reserved, must be kept at reset value.

Bits 16:0 **PIFx:** Pending interrupt flag on line x (x = 16 to 0)
0: No trigger request occurred
1: Selected trigger request occurred
This bit is set when the selected edge event arrives on the interrupt line. This bit is cleared by writing a ‘1’ to the bit.

13.5.7 Interrupt mask register 2 (EXTI_IMR2)

Address offset: 0x20

Reset value: 0x0000 0087

31	30	29	28	27	26	25	24	23	22	21	20	19	18	17	16
Res.	Res.	Res.	Res.	Res.	Res.	Res.	Res.	Res.	Res.	Res.	Res.	Res.	Res.	Res.	Res.

15	14	13	12	11	10	9	8	7	6	5	4	3	2	1	0
Res.	Res.	Res.	Res.	Res.	Res.	Res.	Res	IM39	IM38	IM37	IM36	IM35	IM34	IM33	IM32
								rw	rw	rw	rw	rw	rw	rw	rw

Bits 31:8 Reserved, must be kept at reset value

Bits 7:0 **IMx:** Interrupt mask on line x (x = 39 to 32)
0: Interrupt request from line x is masked
1: Interrupt request from line x is not masked

Note: The reset value for the direct lines (line 17, lines from 23 to 34, line 39) is set to ‘1’ in order to enable the interrupt by default.

13.5.8 Event mask register 2 (EXTI_EMR2)

Address offset: 0x24

Reset value: 0x0000 0000

31	30	29	28	27	26	25	24	23	22	21	20	19	18	17	16
Res.	Res.	Res.	Res.	Res.	Res.	Res.	Res.	Res.	Res.	Res.	Res.	Res.	Res.	Res.	Res.

15	14	13	12	11	10	9	8	7	6	5	4	3	2	1	0
Res.	Res.	Res.	Res.	Res.	Res.	Res.	Res.	EM39	EM38	EM37	EM36	EM35	EM34	EM33	EM32
								rw	rw	rw	rw	rw	rw	rw	rw

Bits 31:8 Reserved, must be kept at reset value

Bits 7:0 **EMx:** Event mask on line x (x = 39 to 32)

0: Event request from line x is masked
1: Event request from line x is not masked

13.5.9 Rising trigger selection register 2 (EXTI_RTSR2)

Address offset: 0x28

Reset value: 0x0000 0000

31	30	29	28	27	26	25	24	23	22	21	20	19	18	17	16
Res.	Res.	Res.	Res.	Res.	Res.	Res.	Res.	Res.	Res.	Res.	Res.	Res.	Res.	Res.	Res.

15	14	13	12	11	10	9	8	7	6	5	4	3	2	1	0
Res.	Res.	Res.	Res.	Res.	Res.	Res.	Res.	Res.	RT38	RT37	RT36	RT35	Res.	Res.	Res.
									rw	rw	rw	rw			

Bits 31:8 Reserved, must be kept at reset value.

Bits 7:3 **RTx:** Rising trigger event configuration bit of line x (x = 35 to 38)

0: Rising trigger disabled (for Event and Interrupt) for input line
1: Rising trigger enabled (for Event and Interrupt) for input line

Bits 2:0 Reserved, must be kept at reset value.

Note: The configurable wakeup lines are edge-triggered. No glitch must be generated on these lines. If a rising edge on a configurable interrupt line occurs during a write operation to the EXTI_RTSR register, the pending bit is not set.

Rising and falling edge triggers can be set for the same interrupt line. In this case, both generate a trigger condition.

13.5.10 Falling trigger selection register 2 (EXTI_FTSR2)

Address offset: 0x2C

Reset value: 0x0000 0000

31	30	29	28	27	26	25	24	23	22	21	20	19	18	17	16
Res.	Res.	Res.	Res.	Res.	Res.	Res.	Res.	Res.	Res.	Res.	Res.	Res.	Res.	Res.	Res.

15	14	13	12	11	10	9	8	7	6	5	4	3	2	1	0
Res.	Res.	Res.	Res.	Res.	Res.	Res.	Res.	Res.	FT38	FT37	FT36	FT35	Res.	Res.	Res.
									rw	rw	rw	rw			

Bits 31:8 Reserved, must be kept at reset value.

Bits 7:3 **FTx:** Falling trigger event configuration bit of line x (x = 35 to 38)

0: Falling trigger disabled (for Event and Interrupt) for input line
1: Falling trigger enabled (for Event and Interrupt) for input line

Bits 2:0 Reserved, must be kept at reset value.

Note: The configurable wakeup lines are edge-triggered. No glitch must be generated on these lines. If a falling edge on a configurable interrupt line occurs during a write operation to the EXTI_FTSR register, the pending bit is not set.

Rising and falling edge triggers can be set for the same interrupt line. In this case, both generate a trigger condition.

13.5.11 Software interrupt event register 2 (EXTI_SWIER2)

Address offset: 0x30

Reset value: 0x0000 0000

31	30	29	28	27	26	25	24	23	22	21	20	19	18	17	16
Res.	Res.	Res.	Res.	Res.	Res.	Res.	Res.	Res.	Res.	Res.	Res.	Res.	Res.	Res.	Res.

15	14	13	12	11	10	9	8	7	6	5	4	3	2	1	0
Res.	Res.	Res.	Res.	Res.	Res.	Res.	Res.	Res.	SWI 38	SWI 37	SWI 36	SWI 35	Res.	Res.	Res.
									rw	rw	rw	rw			

Bits 31:8 Reserved, must be kept at reset value.

Bit 7 **SWIx:** Software interrupt on line x (x = 35 to 38)

If the interrupt is enabled on this line in EXTI_IMR, writing a '1' to this bit when it is at '0' sets the corresponding pending bit of EXTI_PR resulting in an interrupt request generation.
This bit is cleared by clearing the corresponding bit of EXTI_PR (by writing a ‘1’ to the bit).

Bits 2:0 Reserved, must be kept at reset value.

13.5.12 Pending register 2 (EXTI_PR2)

Address offset: 0x34

Reset value: undefined

31	30	29	28	27	26	25	24	23	22	21	20	19	18	17	16
Res.	Res.	Res.	Res.	Res.	Res.	Res.	Res.	Res.	Res.	Res.	Res.	Res.	Res.	Res.	Res.

15	14	13	12	11	10	9	8	7	6	5	4	3	2	1	0
Res.	Res.	Res.	Res.	Res.	Res.	Res.	Res.	Res.	PIF38	PIF37	PIF36	PIF35	Res.	Res.	Res.
									rc_w1	rc_w1	rc_w1	rc_w1			

Bits 31:8 Reserved, must be kept at reset value.

Bit 7 **PIFx:** Pending interrupt flag on line x (x = 35 to 38)

0: No trigger request occurred
1: Selected trigger request occurred
This bit is set when the selected edge event arrives on the interrupt line. This bit is cleared by writing a ‘1’ into the bit.

Bits 2:0 Reserved, must be kept at reset value.

13.5.13 EXTI register map

Table 47 gives the EXTI register map and the reset values.

Table 47. Extended interrupt/event controller register map and reset values

Offset	Register	31	30	29	28	27	26	25	24	23	22	21	20	19	18	17	16	15	14	13	12	11	10	9	8	7	6	5	4	3	2	1	0
0x00	**EXTI_IMR1**	IM31	Res.	Res.	IM28	IM27	IM26	IM25	IM24	IM23	IM22	IM21	IM20	IM19	IM18	IM17	IM16	IM15	IM14	IM13	IM12	IM11	IM10	IM9	IM8	IM7	IM6	IM5	IM4	IM3	IM2	IM1	IM0
	Reset value	1			1	1	1	1	1	1	0	0	0	0	0	1	0	0	0	0	0	0	0	0	0	0	0	0	0	0	0	0	0
0x04	**EXTI_EMR1**	EM31	Res.	Res.	EM28	EM27	EM26	EM25	EM24	EM23	EM22	EM21	EM20	EM19	EM18	EM17	EM16	EM15	EM14	EM13	EM12	EM11	EM10	EM9	EM8	EM7	EM6	EM5	EM4	EM3	EM2	EM1	EM0
	Reset value	0			0	0	0	0	0	0	0	0	0	0	0	0	0	0	0	0	0	0	0	0	0	0	0	0	0	0	0	0	0
0x08	**EXTI_RTSR1**	Res.	Res.	Res.	Res.	Res.	Res.	Res.	Res.	Res.	RT22	RT21	RT20	RT19	RT18	Res.	RT16	RT15	RT14	RT13	RT12	RT11	RT10	RT9	RT8	RT7	RT6	RT5	RT4	RT3	RT2	RT1	RT0
	Reset value										0	0	0	0	0		0	0	0	0	0	0	0	0	0	0	0	0	0	0	0	0	0
0x0C	**EXTI_FTSR1**	Res.	Res.	Res.	Res.	Res.	Res.	Res.	Res.	Res.	FT22	FT21	FT20	FT19	FT18	Res.	FT16	FT15	FT14	FT13	FT12	FT11	FT10	FT9	FT8	FT7	FT6	FT5	FT4	FT3	FT2	FT1	FT0
	Reset value										0	0	0	0	0		0	0	0	0	0	0	0	0	0	0	0	0	0	0	0	0	0
0x10	**EXTI_SWIER1**	Res.	Res.	Res.	Res.	Res.	Res.	Res.	Res.	Res.	SWI22	SWI21	SWI20	SWI19	SWI18	Res.	SWI16	SWI15	SWI14	SWI13	SWI12	SWI11	SWI10	SWI9	SWI8	SWI7	SWI6	SWI5	SWI4	SWI3	SWI2	SWI1	SWI0
	Reset value										0	0	0	0	0		0	0	0	0	0	0	0	0	0	0	0	0	0	0	0	0	0
0x14	**EXTI_PR1**	Res.	Res.	Res.	Res.	Res.	Res.	Res.	Res.	Res.	PIF22	PIF21	PIF20	PIF19	PIF18	Res.	PIF16	PIF15	PIF14	PIF13	PIF12	PIF11	PIF10	PIF9	PIF8	PIF7	PIF6	PIF5	PIF4	PIF3	PIF2	PIF1	PIF0
	Reset value										0	0	0	0	0		0	0	0	0	0	0	0	0	0	0	0	0	0	0	0	0	0

Table 47. Extended interrupt/event controller register map and reset values (continued)

Offset	Register	31	30	29	28	27	26	25	24	23	22	21	20	19	18	17	16	15	14	13	12	11	10	9	8	7	6	5	4	3	2	1	0
0x20	**EXTI_IMR2**	Res.	Res.	Res.	Res.	Res.	Res.	Res.	Res.	Res.	Res.	Res.	Res.	Res.	Res.	Res.	Res.	Res.	Res.	Res.	Res.	Res.	Res.	Res.	Res.	IM39	IM38	IM37	IM36	IM35	IM34	IM33	IM32
	Reset value																									1	0	0	0	0	1	1	1
0x24	**EXTI_EMR2**	Res.	Res.	Res.	Res.	Res.	Res.	Res.	Res.	Res.	Res.	Res.	Res.	Res.	Res.	Res.	Res.	Res.	Res.	Res.	Res.	Res.	Res.	Res.	Res.	EM39	EM38	EM37	EM36	EM35	EM34	EM33	EM32
	Reset value																									0	0	0	0	0	0	0	0
0x28	**EXTI_RTSR2**	Res.	Res.	Res.	Res.	Res.	Res.	Res.	Res.	Res.	Res.	Res.	Res.	Res.	Res.	Res.	Res.	Res.	Res.	Res.	Res.	Res.	Res.	Res.	Res.	Res.	RT38	RT37	RT36	RT35	Res.	Res.	Res.
	Reset value																										0	0	0	0			
0x2C	**EXTI_FTSR2**	Res.	Res.	Res.	Res.	Res.	Res.	Res.	Res.	Res.	Res.	Res.	Res.	Res.	Res.	Res.	Res.	Res.	Res.	Res.	Res.	Res.	Res.	Res.	Res.	Res.	FT38	FT37	FT36	FT35	Res.	Res.	Res.
	Reset value																										0	0	0	0			
0x30	**EXTI_SWIER2**	Res.	Res.	Res.	Res.	Res.	Res.	Res.	Res.	Res.	Res.	Res.	Res.	Res.	Res.	Res.	Res.	Res.	Res.	Res.	Res.	Res.	Res.	Res.	Res.	Res.	SWI38	SWI37	SWI36	SWI35	Res.	Res.	Res.
	Reset value																										0	0	0	0			
0x34	**EXTI_PR2**	Res.	Res.	Res.	Res.	Res.	Res.	Res.	Res.	Res.	Res.	Res.	Res.	Res.	Res.	Res.	Res.	Res.	Res.	Res.	Res.	Res.	Res.	Res.	Res.	Res.	PIF38	PIF37	PIF36	PIF35	Res.	Res.	Res.
	Reset value																										0	0	0	0			

14 Cyclic redundancy check calculation unit (CRC)

14.1 Introduction

The CRC (cyclic redundancy check) calculation unit is used to get a CRC code from 8-, 16- or 32-bit data word and a generator polynomial.

Among other applications, CRC-based techniques are used to verify data transmission or storage integrity. In the scope of the functional safety standards, they offer a means of verifying the Flash memory integrity. The CRC calculation unit helps compute a signature of the software during runtime, to be compared with a reference signature generated at link time and stored at a given memory location.

14.2 CRC main features

- Fully programmable polynomial with programmable size (7, 8, 16, 32 bits).
- Handles 8-,16-, 32-bit data size
- Programmable CRC initial value
- Single input/output 32-bit data register
- Input buffer to avoid bus stall during calculation
- CRC computation done in 4 AHB clock cycles (HCLK) for the 32-bit data size
- General-purpose 8-bit register (can be used for temporary storage)
- Reversibility option on I/O data

14.3 CRC functional description

14.3.1 CRC block diagram

Figure 29. CRC calculation unit block diagram

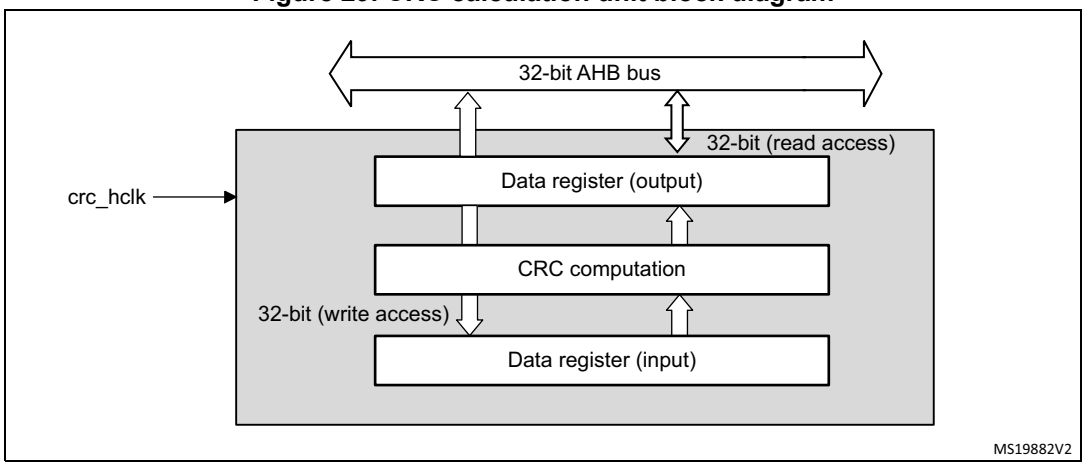

14.3.2 CRC internal signals

Table 48. CRC internal input/output signals

Signal name	Signal type	Description
crc_hclk	Digital input	AHB clock

14.3.3 CRC operation

The CRC calculation unit has a single 32-bit read/write data register (CRC_DR). It is used to input new data (write access), and holds the result of the previous CRC calculation (read access).

Each write operation to the data register creates a combination of the previous CRC value (stored in CRC_DR) and the new one. CRC computation is done on the whole 32-bit data word or byte by byte depending on the format of the data being written.

The CRC_DR register can be accessed by word, right-aligned half-word and right-aligned byte. For the other registers only 32-bit access is allowed.

The duration of the computation depends on data width:

- 4 AHB clock cycles for 32-bit
- 2 AHB clock cycles for 16-bit
- 1 AHB clock cycles for 8-bit

An input buffer allows to immediately write a second data without waiting for any wait states due to the previous CRC calculation.

The data size can be dynamically adjusted to minimize the number of write accesses for a given number of bytes. For instance, a CRC for 5 bytes can be computed with a word write followed by a byte write.

The input data can be reversed, to manage the various endianness schemes. The reversing operation can be performed on 8 bits, 16 bits and 32 bits depending on the REV_IN[1:0] bits in the CRC_CR register.

For example: input data 0x1A2B3C4D is used for CRC calculation as:

0x58D43CB2 with bit-reversal done by byte

0xD458B23C with bit-reversal done by half-word

0xB23CD458 with bit-reversal done on the full word

The output data can also be reversed by setting the REV_OUT bit in the CRC_CR register.

The operation is done at bit level: for example, output data 0x11223344 is converted into 0x22CC4488.

The CRC calculator can be initialized to a programmable value using the RESET control bit in the CRC_CR register (the default value is 0xFFFFFFFF).

The initial CRC value can be programmed with the CRC_INIT register. The CRC_DR register is automatically initialized upon CRC_INIT register write access.

The CRC_IDR register can be used to hold a temporary value related to CRC calculation. It is not affected by the RESET bit in the CRC_CR register.

Polynomial programmability

The polynomial coefficients are fully programmable through the CRC_POL register, and the polynomial size can be configured to be 7, 8, 16 or 32 bits by programming the POLYSIZE[1:0] bits in the CRC_CR register. Even polynomials are not supported.

If the CRC data is less than 32-bit, its value can be read from the least significant bits of the CRC_DR register.

To obtain a reliable CRC calculation, the change on-fly of the polynomial value or size can not be performed during a CRC calculation. As a result, if a CRC calculation is ongoing, the application must either reset it or perform a CRC_DR read before changing the polynomial.

The default polynomial value is the CRC-32 (Ethernet) polynomial: 0x4C11DB7.

14.4 CRC registers

14.4.1 Data register (CRC_DR)

Address offset: 0x00

Reset value: 0xFFFF FFFF

31	30	29	28	27	26	25	24	23	22	21	20	19	18	17	16
DR[31:16]															
rw															

15	14	13	12	11	10	9	8	7	6	5	4	3	2	1	0
DR[15:0]															
rw															

Bits 31:0 **DR[31:0]:** Data register bits

This register is used to write new data to the CRC calculator.

It holds the previous CRC calculation result when it is read.

If the data size is less than 32 bits, the least significant bits are used to write/read the correct value.

14.4.2 Independent data register (CRC_IDR)

Address offset: 0x04

Reset value: 0x0000 0000

31	30	29	28	27	26	25	24	23	22	21	20	19	18	17	16
Res.	Res.	Res.	Res.	Res.	Res.	Res.	Res.	Res.	Res.	Res.	Res.	Res.	Res.	Res.	Res.

15	14	13	12	11	10	9	8	7	6	5	4	3	2	1	0
Res.	Res.	Res.	Res.	Res.	Res.	Res.	Res.	IDR[7:0]							
								rw							

Bits 31:8 Reserved, must be kept cleared.

Bits 7:0 **IDR[7:0]**: General-purpose 8-bit data register bits

These bits can be used as a temporary storage location for one byte.

This register is not affected by CRC resets generated by the RESET bit in the CRC_CR register

14.4.3 Control register (CRC_CR)

Address offset: 0x08

Reset value: 0x0000 0000

31	30	29	28	27	26	25	24	23	22	21	20	19	18	17	16
Res.	Res.	Res.	Res.	Res.	Res.	Res.	Res.	Res.	Res.	Res.	Res.	Res.	Res.	Res.	Res.

15	14	13	12	11	10	9	8	7	6	5	4	3	2	1	0
Res.	Res.	Res.	Res.	Res.	Res.	Res.	Res.	REV_OUT	REV_IN[1:0]		POLYSIZE[1:0]		Res.	Res.	RESET
								rw	rw	rw	rw	rw			rs

Bits 31:8 Reserved, must be kept cleared.

Bit 7 **REV_OUT**: Reverse output data
This bit controls the reversal of the bit order of the output data.
0: Bit order not affected
1: Bit-reversed output format

Bits 6:5 **REV_IN[1:0]**: Reverse input data
These bits control the reversal of the bit order of the input data
00: Bit order not affected
01: Bit reversal done by byte
10: Bit reversal done by half-word
11: Bit reversal done by word

Bits 4:3 **POLYSIZE[1:0]**: Polynomial size
These bits control the size of the polynomial.
00: 32 bit polynomial
01: 16 bit polynomial
10: 8 bit polynomial
11: 7 bit polynomial

Bits 2:1 Reserved, must be kept cleared.

Bit 0 **RESET**: RESET bit
This bit is set by software to reset the CRC calculation unit and set the data register to the value stored in the CRC_INIT register. This bit can only be set, it is automatically cleared by hardware

14.4.4 Initial CRC value (CRC_INIT)

Address offset: 0x10

Reset value: 0xFFFF FFFF

31	30	29	28	27	26	25	24	23	22	21	20	19	18	17	16
CRC_INIT[31:16]															
rw															
15	14	13	12	11	10	9	8	7	6	5	4	3	2	1	0
CRC_INIT[15:0]															
rw															

Bits 31:0 **CRC_INIT**: *Programmable initial CRC value*
This register is used to write the CRC initial value.

14.4.5 CRC polynomial (CRC_POL)

Address offset: 0x14

Reset value: 0x04C11DB7

31	30	29	28	27	26	25	24	23	22	21	20	19	18	17	16
POL[31:16]															
rw															

15	14	13	12	11	10	9	8	7	6	5	4	3	2	1	0
POL[15:0]															
rw															

Bits 31:0 **POL[31:0]**: Programmable polynomial

This register is used to write the coefficients of the polynomial to be used for CRC calculation. If the polynomial size is less than 32-bits, the least significant bits have to be used to program the correct value.

14.4.6 CRC register map

Table 49. CRC register map and reset values

Offset	Register	31	30	29	28	27	26	25	24	23	22	21	20	19	18	17	16	15	14	13	12	11	10	9	8	7	6	5	4	3	2	1	0
0x00	**CRC_DR**	DR[31:0]																															
	Reset value	1	1	1	1	1	1	1	1	1	1	1	1	1	1	1	1	1	1	1	1	1	1	1	1	1	1	1	1	1	1	1	1
0x04	**CRC_IDR**	Res.	Res.	Res.	Res.	Res.	Res.	Res.	Res.	Res.	Res.	Res.	Res.	Res.	Res.	Res.	Res.	Res.	Res.	Res.	Res.	Res.	Res.	Res.	Res.	IDR[7:0]							
	Reset value																									0	0	0	0	0	0	0	0
0x08	**CRC_CR**	Res.	Res.	Res.	Res.	Res.	Res.	Res.	Res.	Res.	Res.	Res.	Res.	Res.	Res.	Res.	Res.	Res.	Res.	Res.	Res.	Res.	Res.	Res.	Res.	REV_OUT	REV_IN[1:0]		POLYSIZE[1:0]		Res.	Res.	RESET
	Reset value																									0	0	0	0	0			0
0x10	**CRC_INIT**	CRC_INIT[31:0]																															
	Reset value	1	1	1	1	1	1	1	1	1	1	1	1	1	1	1	1	1	1	1	1	1	1	1	1	1	1	1	1	1	1	1	1
0x14	**CRC_POL**	Polynomial coefficients																															
	Reset value	0x04C11DB7																															

Refer to *Section 2.2.2 on page 62* for the register boundary addresses.

15 Quad-SPI interface (QUADSPI)

15.1 Introduction

The QUADSPI is a specialized communication interface targeting single, dual or quad SPI Flash memories. It can operate in any of the three following modes:

- indirect mode: all the operations are performed using the QUADSPI registers
- status polling mode: the external Flash memory status register is periodically read and an interrupt can be generated in case of flag setting
- memory-mapped mode: the external Flash memory is mapped to the microcontroller address space and is seen by the system as if it was an internal memory

Both throughput and capacity can be increased two-fold using dual-flash mode, where two Quad-SPI Flash memories are accessed simultaneously.

15.2 QUADSPI main features

- Three functional modes: indirect, status-polling, and memory-mapped
- Dual-flash mode, where 8 bits can be sent/received simultaneously by accessing two Flash memories in parallel.
- SDR and DDR support
- Fully programmable opcode for both indirect and memory mapped mode
- Fully programmable frame format for both indirect and memory mapped mode
- Integrated FIFO for reception and transmission
- 8, 16, and 32-bit data accesses are allowed
- DMA channel for indirect mode operations
- Interrupt generation on FIFO threshold, timeout, operation complete, and access error

15.3 QUADSPI functional description

15.3.1 QUADSPI block diagram

Figure 30. QUADSPI block diagram when dual-flash mode is disabled

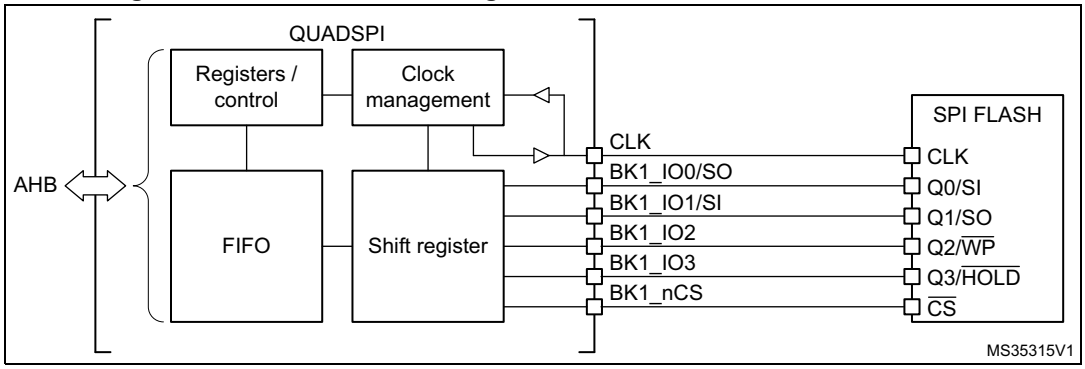

Figure 31. QUADSPI block diagram when dual-flash mode is enabled

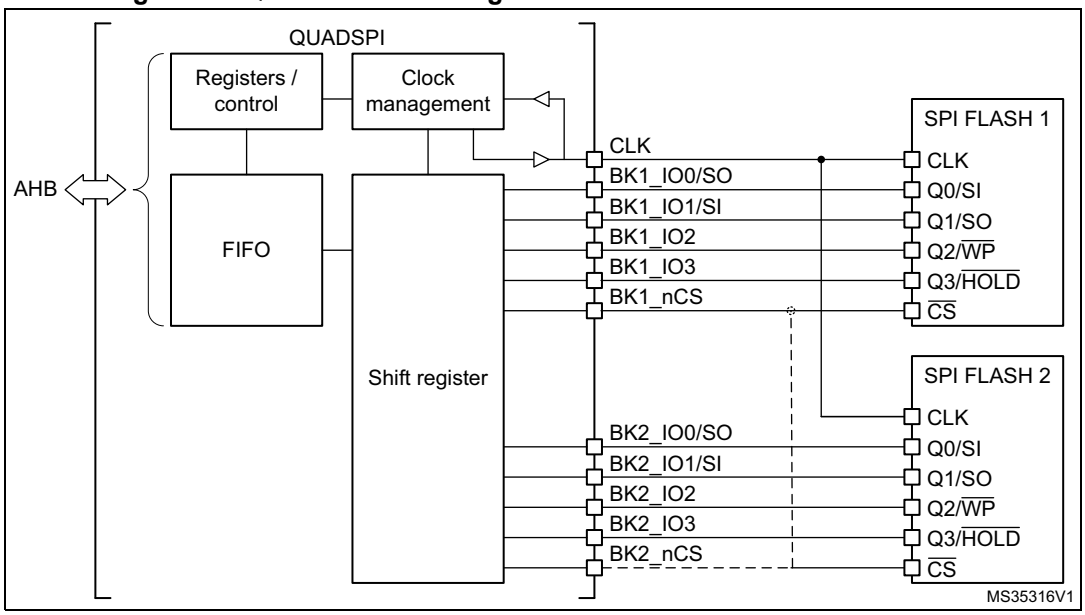

The QUADSPI uses 6 signals to interface with a single Flash memory, or 10 to 11 signals to interface with two Flash memories (FLASH 1 and FLASH 2) in dual-flash mode:

- CLK - Clock output, for both memories
- BK1_IO0/SO - Bidirectional IO in dual/quad modes or serial output in single mode, for FLASH 1
- BK1_IO1/SI - Bidirectional IO in dual/quad modes or serial input in single mode, for FLASH 1
- BK1_IO2 - Bidirectional IO in quad mode, for FLASH 1
- BK1_IO3 - Bidirectional IO in quad mode, for FLASH 1
- BK2_IO0/SO - Bidirectional IO in dual/quad modes or serial output in single mode, for FLASH 2
- BK2_IO1/SI - Bidirectional IO in dual/quad modes or serial input in single mode, for FLASH 2
- BK2_IO2 - Bidirectional IO in quad mode, for FLASH 2
- BK2_IO3 - Bidirectional IO in quad mode, for FLASH 2
- BK1_nCS - Chip select output (active low), for FLASH 1. Can also be used for FLASH 2 if QUADSPI is always used in dual-flash mode.
- BK2_nCS - Chip select output (active low), for FLASH 2. Can also be used for FLASH 1 if QUADSPI is always used in dual-flash mode.

15.3.2 QUADSPI Command sequence

The QUADSPI communicates with the Flash memory using commands. Each command can include 5 phases: instruction, address, alternate byte, dummy, data. Any of these phases can be configured to be skipped, but at least one of the instruction, address, alternate byte, or data phase must be present.

nCS falls before the start of each command and rises again after each command finishes.

Figure 32. An example of a read command in quad mode

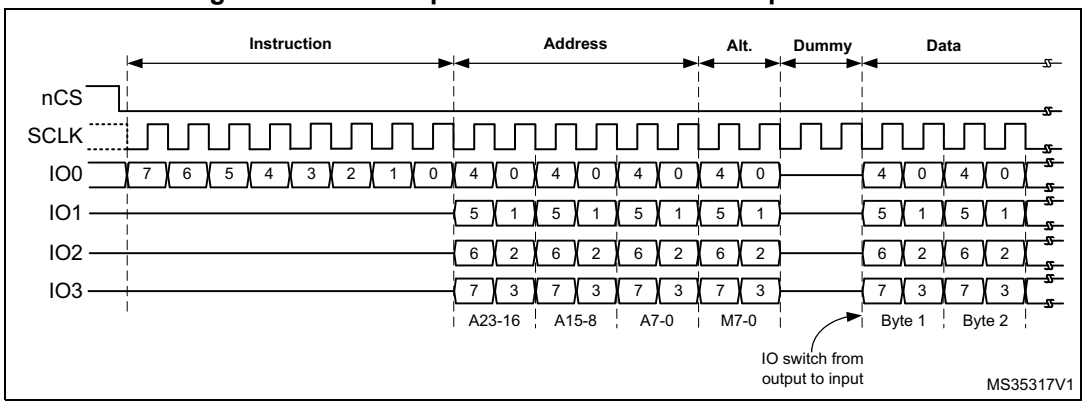

Instruction phase

During this phase, an 8-bit instruction, configured in INSTRUCTION field of QUADSPI_CCR[7:0] register, is sent to the Flash memory, specifying the type of operation to be performed.

Though most Flash memories can receive instructions only one bit at a time from the IO0/SO signal (single SPI mode), the instruction phase can optionally send 2 bits at a time (over IO0/IO1 in dual SPI mode) or 4 bits at a time (over IO0/IO1/IO2/IO3 in quad SPI mode). This can be configured using the IMODE[1:0] field of QUADSPI_CCR[9:8] register.

When IMODE = 00, the instruction phase is skipped, and the command sequence starts with the address phase, if present.

Address phase

In the address phase, 1-4 bytes are sent to the Flash memory to indicate the address of the operation. The number of address bytes to be sent is configured in the ADSIZE[1:0] field of QUADSPI_CCR[13:12] register. In indirect and automatic-polling modes, the address bytes to be sent are specified in the ADDRESS[31:0] field of QUADSPI_AR register, while in memory-mapped mode the address is given directly via the AHB (from the Cortex® or from a DMA).

The address phase can send 1 bit at a time (over SO in single SPI mode), 2 bits at a time (over IO0/IO1 in dual SPI mode), or 4 bits at a time (over IO0/IO1/IO2/IO3 in quad SPI mode). This can be configured using the ADMODE[1:0] field of QUADSPI_CCR[11:10] register.

When ADMODE = 00, the address phase is skipped, and the command sequence proceeds directly to the next phase, if any.

Alternate-bytes phase

In the alternate-bytes phase, 1-4 bytes are sent to the Flash memory, generally to control the mode of operation. The number of alternate bytes to be sent is configured in the ABSIZE[1:0] field of QUADSPI_CCR[17:16] register. The bytes to be sent are specified in the QUADSPI_ABR register.

The alternate-bytes phase can send 1 bit at a time (over SO in single SPI mode), 2 bits at a time (over IO0/IO1 in dual SPI mode), or 4 bits at a time (over IO0/IO1/IO2/IO3 in quad SPI mode). This can be configured using the ABMODE[1:0] field of QUADSPI_CCR[15:14] register.

When ABMODE = 00, the alternate-bytes phase is skipped, and the command sequence proceeds directly to the next phase, if any.

There may be times when only a single nibble needs to be sent during the alternate-byte phase rather than a full byte, such as when dual-mode is used and only two cycles are used for the alternate bytes. In this case, firmware can use quad-mode (ABMODE = 11) and send a byte with bits 7 and 3 of ALTERNATE set to ‘1’ (keeping the IO3 line high), and bits 6 and 2 set to ‘0’ (keeping the IO2 line low). In this case the upper two bits of the nibble to be sent are placed in bits 4:3 of ALTERNATE while the lower two bits are placed in bits 1 and 0. For example, if the nibble 2 (0010) is to be sent over IO0/IO1, then ALTERNATE should be set to 0x8A (1000_1010).

Dummy-cycles phase

In the dummy-cycles phase, 1-31 cycles are given without any data being sent or received, in order to allow the Flash memory the time to prepare for the data phase when higher clock frequencies are used. The number of cycles given during this phase is specified in the DCYC[4:0] field of QUADSPI_CCR[22:18] register. In both SDR and DDR modes, the duration is specified as a number of full CLK cycles.

When DCYC is zero, the dummy-cycles phase is skipped, and the command sequence proceeds directly to the data phase, if present.

The operating mode of the dummy-cycles phase is determined by DMODE.

In order to assure enough “turn-around” time for changing the data signals from output mode to input mode, there must be at least one dummy cycle when using dual or quad mode to receive data from the Flash memory.

Data phase

During the data phase, any number of bytes can be sent to, or received from the Flash memory.

In indirect and automatic-polling modes, the number of bytes to be sent/received is specified in the QUADSPI_DLR register.

In indirect write mode the data to be sent to the Flash memory must be written to the QUADSPI_DR register, while in indirect read mode the data received from the Flash memory is obtained by reading from the QUADSPI_DR register.

In memory-mapped mode, the data which is read is sent back directly over the AHB to the Cortex or to a DMA.

The data phase can send/receive 1 bit at a time (over SO/SI in single SPI mode), 2 bits at a time (over IO0/IO1 in dual SPI mode), or 4 bits at a time (over IO0/IO1/IO2/IO3 in quad SPI mode). This can be configured using the ABMODE[1:0] field of QUADSPI_CCR[15:14] register.

When DMODE = 00, the data phase is skipped, and the command sequence finishes immediately by raising nCS. This configuration must only be used in only indirect write mode.

15.3.3 QUADSPI signal interface protocol modes

Single SPI mode

Legacy SPI mode allows just a single bit to be sent/received serially. In this mode, data is sent to the Flash memory over the SO signal (whose I/O shared with IO0). Data received from the Flash memory arrives via SI (whose I/O shared with IO1).

The different phases can each be configured separately to use this single bit mode by setting the IMODE/ADMODE/ABMODE/DMODE fields (in QUADSPI_CCR) to 01.

In each phase which is configured in single mode:

- IO0 (SO) is in output mode
- IO1 (SI) is in input mode (high impedance)
- IO2 is in output mode and forced to ‘0’ (to deactivate the “write protect” function)
- IO3 is in output mode and forced to ‘1’ (to deactivate the “hold” function)

This is the case even for the dummy phase if DMODE = 01.

Dual SPI mode

In dual SPI mode, two bits are sent/received simultaneously over the IO0/IO1 signals.

The different phases can each be configured separately to use dual SPI mode by setting the IMODE/ADMODE/ABMODE/DMODE fields of QUADSPI_CCR register to 10.

In each phase which is configured in dual mode:

- IO0/IO1 are at high-impedance (input) during the data phase for read operations, and outputs in all other cases
- IO2 is in output mode and forced to ‘0’
- IO3 is in output mode and forced to ‘1’

In the dummy phase when DMODE = 01, IO0/IO1 are always high-impedance.

Quad SPI mode

In quad SPI mode, four bits are sent/received simultaneously over the IO0/IO1/IO2/IO3 signals.

The different phases can each be configured separately to use quad SPI mode by setting the IMODE/ADMODE/ABMODE/DMODE fields of QUADSPI_CCR register to 11.

In each phase which is configured in quad mode, IO0/IO1/IO2/IO3 are all are at high-impedance (input) during the data phase for read operations, and outputs in all other cases.

In the dummy phase when DMODE = 11, IO0/IO1/IO2/IO3 are all high-impedance.

IO2 and IO3 are used only in Quad SPI mode. If none of the phases are configured to use Quad SPI mode, then the pins corresponding to IO2 and IO3 can be used for other functions even while QUADSPI is active.

SDR mode

By default, the DDRM bit (QUADSPI_CCR[31]) is 0 and the QUADSPI operates in single data rate (SDR) mode.

In SDR mode, when the QUADSPI is driving the IO0/SO, IO1, IO2, IO3 signals, these signals transition only with the falling edge of CLK.

When receiving data in SDR mode, the QUADSPI assumes that the Flash memories also send the data using CLK's falling edge. By default (when SSHIFT = 0), the signals are sampled using the following (rising) edge of CLK.

DDR mode

When the DDRM bit (QUADSPI_CCR[31]) is set to 1, the QUADSPI operates in double data rate (DDR) mode.

In DDR mode, when the QUADSPI is driving the IO0/SO, IO1, IO2, IO3 signals in the address/alternate-byte/data phases, a bit is sent on each of the falling and rising edges of CLK.

The instruction phase is not affected by DDRM. The instruction is always sent using CLK's falling edge.

When receiving data in DDR mode, the QUADSPI assumes that the Flash memories also send the data using both rising and falling CLK edges. When DDRM = 1, firmware must clear SSHIFT bit (QUADSPI_CR[4]). Thus, the signals are sampled one half of a CLK cycle later (on the following, opposite edge).

Figure 33. An example of a DDR command in quad mode

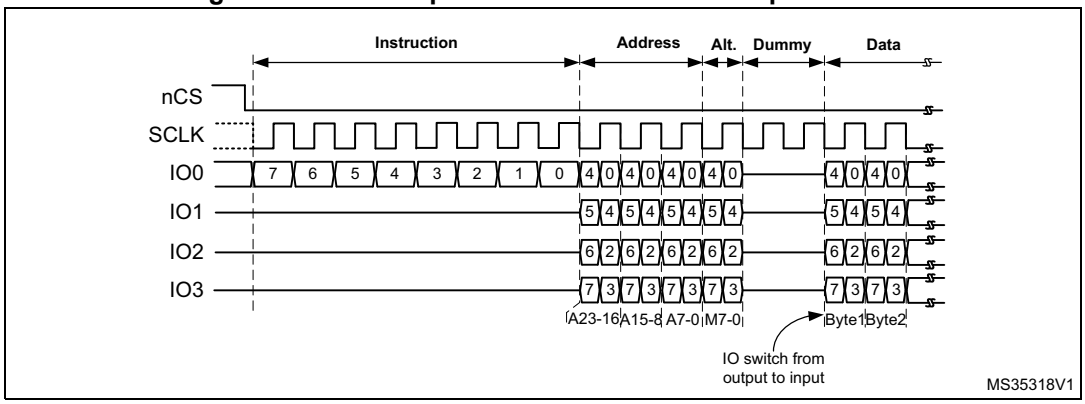

Dual-flash mode

When the DFM bit (QUADSPI_CR[6]) is 1, the QUADSPI is in dual-flash mode, where two external quad SPI Flash memories (FLASH 1 and FLASH 2) are used in order to send/receive 8 bits (or 16 bits in DDR mode) every cycle, effectively doubling the throughput as well as the capacity.

Each of the Flash memories use the same CLK and optionally the same nCS signals, but each have separate IO0, IO1, IO2, and IO3 signals.

Dual-flash mode can be used in conjunction with single-bit, dual-bit, and quad-bit modes, as well as with either SDR or DDR mode.

The Flash memory size, as specified in FSIZE[4:0] (QUADSPI_DCR[20:16]), should reflect the total Flash memory capacity, which is double the size of one individual component.

If address X is even, then the byte which the QUADSPI gives for address X is the byte at the address X/2 of FLASH 1, and the byte which the QUADSPI gives for address X+1 is the byte at the address X/2 of FLASH 2. In other words, bytes at even addresses are all stored in FLASH 1 and bytes at odd addresses are all stored in FLASH 2.

When reading the Flash memories status registers in dual-flash mode, twice as many bytes should be read compared to doing the same read in single-flash mode. This means that if each Flash memory gives 8 valid bits after the instruction for fetching the status register, then the QUADSPI must be configured with a data length of 2 bytes (16 bits), and the QUADSPI will receive one byte from each Flash memory. If each Flash memory gives a status of 16 bits, then the QUADSPI must be configured to read 4 bytes to get all the status bits of both Flash memories in dual-flash mode. The least-significant byte of the result (in the data register) is the least-significant byte of FLASH 1 status register, while the next byte is the least-significant byte of FLASH 2 status register. Then, the third byte of the data register is FLASH 1 second byte, while the forth byte is FLASH 2 second byte (in the case that the Flash memories have 16-bit status registers).

An even number of bytes must always be accessed in dual-flash mode. For this reason, bit 0 of the data length field (QUADSPI_DLR[0]) is stuck at 1 when DRM = 1.

In dual-flash mode, the behavior of FLASH 1 interface signals are basically the same as in normal mode. FLASH 2 interface signals have exactly the same waveforms as FLASH 1 during the instruction, address, alternate-byte, and dummy-cycles phases. In other words, each Flash memory always receives the same instruction and the same address. Then, during the data phase, the BK1_IOx and BK2_IOx buses are both transferring data in parallel, but the data that are sent to (or received from) FLASH 1 are distinct from those of FLASH 2.

15.3.4 QUADSPI indirect mode

When in indirect mode, commands are started by writing to QUADSPI registers and data is transferred by writing or reading the data register, in the same way as for other communication peripherals.

When FMODE = 00 (QUADSPI_CCR[27:26]), the QUADSPI is in indirect write mode, where bytes are sent to the Flash memory during the data phase. Data are provided by writing to the data register (QUADSPI_DR).

When FMODE = 01, the QUADSPI is in indirect read mode, where bytes are received from the Flash memory during the data phase. Data are recovered by reading QUADSPI_DR.

The number of bytes to be read/written is specified in the data length register (QUADSPI_DLR). If QUADSPI_DLR = 0xFFFF_FFFF (all 1's), then the data length is considered undefined and the QUADSPI simply continues to transfer data until the end of Flash memory (as defined by FSIZE) is reached. If no bytes are to be transferred, DMODE (QUADSPI_CCR[25:24]) should be set to 00.

If QUADSPI_DLR = 0xFFFF_FFFF and FSIZE = 0x1F (max value indicating a 4GB Flash memory), then in this special case the transfers continue indefinitely, stopping only after an abort request or after the QUADSPI is disabled. After the last memory address is read (at address 0xFFFF_FFFF), reading continues with address = 0x0000_0000.

When the programmed number of bytes to be transmitted or received is reached, TCF is set and an interrupt is generated if TCIE = 1. In the case of undefined number of data, the TCF is set when the limit of the external SPI memory is reached according to the Flash memory size defined in the QUADSPI_CR.

Triggering the start of a command

Essentially, a command starts as soon as firmware gives the last information that is necessary for this command. Depending on the QUADSPI configuration, there are three

different ways to trigger the start of a command in indirect mode. The commands starts immediately after:

1. a write is performed to INSTRUCTION[7:0] (QUADSPI_CCR), if no address is necessary (when ADMODE = 00) and if no data needs to be provided by the firmware (when FMODE = 01 or DMODE = 00)
2. a write is performed to ADDRESS[31:0] (QUADSPI_AR), if an address is necessary (when ADMODE != 00) and if no data needs to be provided by the firmware (when FMODE = 01 or DMODE = 00)
3. a write is performed to DATA[31:0] (QUADSPI_DR), if an address is necessary (when ADMODE != 00) and if data needs to be provided by the firmware (when FMODE = 00 and DMODE != 00)

Writes to the alternate byte register (QUADSPI_ABR) never trigger the communication start. If alternate bytes are required, they must be programmed before.

As soon as a command is started, the BUSY bit (bit 5 of QUADSPI_SR) is automatically set.

FIFO and data management

In indirect mode, data go through a 16-byte FIFO which is internal to the QUADSPI. FLEVEL[4:0] (QUADSPI_SR[12:8]) indicates how many bytes are currently being held in the FIFO.

In indirect write mode (FMODE = 00), firmware adds data to the FIFO when it writes QUADSPI_DR. Word writes add 4 bytes to the FIFO, halfword writes add 2 bytes, and byte writes add only 1 byte. If firmware adds too many bytes to the FIFO (more than is indicated by DL[31:0]), the extra bytes are flushed from the FIFO at the end of the write operation (when TCF is set).

Byte/halfword accesses to QUADSPI_DR must be done only to the least significant byte/halfword of the 32-bit register.

FTHRES[3:0] is used to define a FIFO threshold. When the threshold is reached, the FTF (FIFO threshold flag) is set. In indirect read mode, FTF is set when the number of valid bytes to be read from the FIFO is above the threshold. FTF is also set if there are data in the FIFO after the last byte is read from the Flash memory, regardless of the FTHRES setting. In indirect write mode, FTF is set when the number of empty bytes in the FIFO is above the threshold.

If FTIE = 1, there is an interrupt when FTF is set. If DMAEN = 1, a DMA transfer is initiated when FTF is set. FTF is cleared by HW as soon as the threshold condition is no longer true (after enough data has been transferred by the CPU or DMA).

In indirect read mode when the FIFO becomes full, the QUADSPI temporarily stops reading bytes from the Flash memory to avoid an overrun. Please note that the reading of the Flash memory does not restart until 4 bytes become vacant in the FIFO (when FLEVEL ≤ 11). Thus, when FTHRES ≥ 13, the application must take care to read enough bytes to assure that the QUADSPI will start retrieving data from the Flash memory again. Otherwise, the FTF flag will stay at '0' as long as 11 < FLEVEL < FTHRES.

15.3.5 QUADSPI status flag polling mode

In automatic-polling mode, the QUADSPI periodically starts a command to read a defined number of status bytes (up to 4). The received bytes can be masked to isolate some status bits and an interrupt can be generated when the selected bits have a defined value.

The accesses to the Flash memory begin in the same way as in indirect read mode: if no address is required (AMODE = 00), accesses begin as soon as the QUADSPI_CCR is written. Otherwise, if an address is required, the first access begins when QUADSPI_AR is written. BUSY goes high at this point and stays high even between the periodic accesses.

The contents of MASK[31:0] (QUADSPI_PSMAR) are used to mask the data from the Flash memory in automatic-polling mode. If the MASK[n] = 0, then bit n of the result is masked and not considered. If MASK[n] = 1, and the content of bit[n] is the same as MATCH[n] (QUADSPI_PSMAR), then there is a match for bit n.

If the polling match mode bit (PMM, QUADSPI_CR[23]) is 0, then “AND” match mode is activated. This means status match flag (SMF) is set only when there is a match on all of the unmasked bits.

If PMM = 1, then “OR” match mode is activated. This means SMF is set if there is a match on any of the unmasked bits.

An interrupt is called when SMF is set if SMIE = 1.

If the automatic-polling-mode-stop (APMS) bit is set, operation stops and BUSY goes to 0 as soon as a match is detected. Otherwise, BUSY stays at ‘1’ and the periodic accesses continue until there is an abort or the QUADSPI is disabled (EN = 0).

The data register (QUADSPI_DR) contains the latest received status bytes (the FIFO is deactivated). The content of the data register is not affected by the masking used in the matching logic. The FTF status bit is set as soon as a new reading of the status is complete, and FTF is cleared as soon as the data is read.

15.3.6 QUADSPI memory-mapped mode

When configured in memory-mapped mode, the external SPI device is seen as an internal memory.

It is forbidden to access QUADSPI Flash bank area before having properly configured and enabled the QUADSPI peripheral.

No more than 256MB can addressed even if the Flash memory capacity is larger.

If an access is made to an address outside of the range defined by FSIZE but still within the 256MB range, then an AHB error is given. The effect of this error depends on the AHB master that attempted the access:

- If it is the Cortex® CPU, a hard fault interrupt is generated
- If it is a DMA, a DMA transfer error is generated and the corresponding DMA channel is automatically disabled.

Byte, halfword, and word access types are all supported.

Support for execute in place (XIP) operation is implemented, where the QUADSPI anticipates the next microcontroller access and load in advance the byte at the following address. If the subsequent access is indeed made at a continuous address, the access will be completed faster since the value is already prefetched.

By default, the QUADSPI never stops its prefetch operation, keeping the previous read operation active with nCS maintained low, even if no access to the Flash memory occurs for a long time. Since Flash memories tend to consume more when nCS is held low, the application might want to activate the timeout counter (TCEN = 1, QUADSPI_CR[3]) so that nCS is released after a period of TIMEOUT[15:0] (QUADSPI_LPTR) cycles have elapsed without any access since when the FIFO becomes full with prefetch data.

BUSY goes high as soon as the first memory-mapped access occurs. Because of the prefetch operations, BUSY does not fall until there is a timeout, there is an abort, or the peripheral is disabled.

15.3.7 QUADSPI Flash memory configuration

The device configuration register (QUADSPI_DCR) can be used to specify the characteristics of the external SPI Flash memory.

The FSIZE[4:0] field defines the size of external memory using the following formula:

Number of bytes in Flash memory = $2^{[FSIZE+1]}$

FSIZE+1 is effectively the number of address bits required to address the Flash memory. The Flash memory capacity can be up to 4GB (addressed using 32 bits) in indirect mode, but the addressable space in memory-mapped mode is limited to 256MB.

If DFM = 1, FSIZE indicates the total capacity of the two Flash memories together.

When the QUADSPI executes two commands, one immediately after the other, it raises the chip select signal (nCS) high between the two commands for only one CLK cycle by default. If the Flash memory requires more time between commands, the chip select high time (CSHT) field can be used to specify the minimum number of CLK cycles (up to 8) that nCS must remain high.

The clock mode (CKMODE) bit indicates the CLK signal logic level in between commands (when nCS = 1).

15.3.8 QUADSPI delayed data sampling

By default, the QUADSPI samples the data driven by the Flash memory one half of a CLK cycle after the Flash memory drives the signal.

In case of external signal delays, it may be beneficial to sample the data later. Using the SSHIFT bit (QUADSPI_CR[4]), the sampling of the data can be shifted by half of a CLK cycle.

Clock shifting is not supported in DDR mode: the SSHIFT bit must be clear when DDRM bit is set.

15.3.9 QUADSPI configuration

The QUADSPI configuration is done in two phases:

- QUADSPI IP configuration
- QUADSPI Flash memory configuration

Once configured and enabled, the QUADSPI can be used in one of its three operating modes: indirect mode, status-polling mode, or memory-mapped mode.

QUADSPI IP configuration

The QUADSPI IP is configured using the QUADSPI_CR. The user shall configure the clock prescaler division factor and the sample shifting settings for the incoming data.

DDR mode can be set through the DDRM bit. Once enabled, the address and the alternate bytes are sent on both clock edges and the data are sent/received on both clock edges. Regardless of the DDRM bit setting, instructions are always sent in SDR mode.

The DMA requests are enabled setting the DMAEN bit. In case of interrupt usage, their respective enable bit can be also set during this phase.

FIFO level for either DMA request generation or interrupt generation is programmed in the FTHRES bits.

If timeout counter is needed, the TCEN bit can be set and the timeout value programmed in the QUADSPI_LPTR register.

Dual-flash mode can be activated by setting DFM to 1.

QUADSPI Flash memory configuration

The parameters related to the targeted external Flash memory are configured through the QUADSPI_DCR register.The user shall program the Flash memory size in the FSIZE bits, the Chip Select minimum high time in the CSHT bits, and the functional mode (Mode 0 or Mode 3) in the MODE bit.

15.3.10 QUADSPI usage

The operating mode is selected using FMODE[1:0] (QUADSPI_CCR[27:26]).

Indirect mode procedure

When FMODE is programmed to 00, indirect write mode is selected and data can be sent to the Flash memory. With FMODE = 01, indirect read mode is selected where data can be read from the Flash memory.

When the QUADSPI is used in indirect mode, the frames are constructed in the following way:

1. Specify a number of data bytes to read or write in the QUADSPI_DLR
2. Specify the frame format, mode and instruction code in the QUADSPI_CCR
3. Specify optional alternate byte to be sent right after the address phase in the QUADSPI_ABR
4. Specify the operating mode in the QUADSPI_CR. If FMODE = 00 (indirect write mode) and DMAEN = 1, then QUADSPI_AR should be specified before QUADSPI_CR, because otherwise QUADSPI_DR might be written by the DMA before QUADSPI_AR is updated (if the DMA controller has already been enabled)
5. Specify the targeted address in the QUADSPI_AR
6. Read/Write the data from/to the FIFO through the QUADSPI_DR

When writing the control register (QUADSPI_CR) the user specifies the following settings:

- The enable bit (EN) set to ‘1’
- The DMA enable bit (DMAEN) for transferring data to/from RAM
- Timeout counter enable bit (TCEN)
- Sample shift setting (SSHIFT)
- FIFO threshold level (FTRHES) to indicate when the FTF flag should be set
- Interrupt enables
- Automatic polling mode parameters: match mode and stop mode (valid when FMODE = 11)
- Clock prescaler

When writing the communication configuration register (QUADSPI_CCR) the user specifies the following parameters:

- The instruction byte through the INSTRUCTION bits
- The way the instruction has to be sent through the IMODE bits (1/2/4 lines)
- The way the address has to be sent through the ADMODE bits (None/1/2/4 lines)
- The address size (8/16/24/32-bit) through the ADSIZE bits
- The way the alternate bytes have to be sent through the ABMODE (None/1/2/4 lines)
- The alternate bytes number (1/2/3/4) through the ABSIZE bits
- The presence or not of dummy bytes through the DBMODE bit
- The number of dummy bytes through the DCYC bits
- The way the data have to be sent/received (None/1/2/4 lines) through the DMODE bits

If neither the address register (QUADSPI_AR) nor the data register (QUADSPI_DR) need to be updated for a particular command, then the command sequence starts as soon as QUADSPI_CCR is written. This is the case when both ADMODE and DMODE are 00, or if just ADMODE = 00 when in indirect read mode (FMODE = 01).

When an address is required (ADMODE is not 00) and the data register does not need to be written (when FMODE = 01 or DMODE = 00), the command sequence starts as soon as the address is updated with a write to QUADSPI_AR.

In case of data transmission (FMODE = 00 and DMODE! = 00), the communication start is triggered by a write in the FIFO through QUADSPI_DR.

Status flag polling mode

The status flag polling mode is enabled setting the FMODE field (QUADSPI_CCR[27:26]) to 10. In this mode, the programmed frame will be sent and the data retrieved periodically.

The maximum amount of data read in each frame is 4 bytes. If more data is requested in QUADSPI_DLR, it will be ignored and only 4 bytes will be read.

The periodicity is specified in the QUADSPI_PISR register.

Once the status data has been retrieved, it can internally be processed i order to:

- set the status match flag and generate an interrupt if enabled
- stop automatically the periodic retrieving of the status bytes

The received value can be masked with the value stored in the QUADSPI_PSMKR and ORed or ANDed with the value stored in the QUADSPI_PSMAR.

In case of match, the status match flag is set and an interrupt is generated if enabled, and the QUADSPI can be automatically stopped if the AMPS bit is set.

In any case, the latest retrieved value is available in the QUADSPI_DR.

Memory-mapped mode

In memory-mapped mode, the external Flash memory is seen as internal memory but with some latency during accesses. Only read operations are allowed to the external Flash memory in this mode.

Memory-mapped mode is entered by setting the FMODE to 11 in the QUADSPI_CCR register.

The programmed instruction and frame is sent when an AHB master is accessing the memory mapped space.

The FIFO is used as a prefetch buffer to anticipate linear reads. Any access to QUADSPI_DR in this mode returns zero.

The data length register (QUADSPI_DLR) has no meaning in memory-mapped mode.

15.3.11 Sending the instruction only once

Some Flash memories (e.g. Winbound) might provide a mode where an instruction must be sent only with the first command sequence, while subsequent commands start directly with the address. One can take advantage of such a feature using the SIOO bit (QUADSPI_CCR[28]).

SIOO is valid for all functional modes (indirect, automatic polling, and memory-mapped). If the SIOO bit is set, the instruction is sent only for the first command following a write to QUADSPI_CCR. Subsequent command sequences skip the instruction phase, until there is a write to QUADSPI_CCR.

SIOO has no effect when IMODE = 00 (no instruction).

15.3.12 QUADSPI error management

A error can be generated in the following case:

- In indirect mode or status flag polling mode when a wrong address has been programmed in the QUADSPI_AR (according to the Flash memory size defined by FSIZE[4:0] in the QUADSPI_DCR): this will set the TEF and an interrupt is generated if enabled.
- Also in indirect mode, if the address plus the data length exceeds the Flash memory size, TEF will be set as soon as the access is triggered.
- In memory-mapped mode, when an out of range access is done by an AHB master or when the QUADSPI is disabled: this will generate an AHB error as a response to the faulty AHB request.
- When an AHB master is accessing the memory mapped space while the memory mapped mode is disabled: this will generate an AHB error as a response to the faulty AHB request.

15.3.13 QUADSPI busy bit and abort functionality

Once the QUADSPI starts an operation with the Flash memory, the BUSY bit is automatically set in the QUADSPI_SR.

In indirect mode, the BUSY bit is reset once the QUADSPI has completed the requested command sequence and the FIFO is empty.

In automatic-polling mode, BUSY goes low only after the last periodic access is complete, due to a match when APMS = 1, or due to an abort.

After the first access in memory-mapped mode, BUSY goes low only on a timeout event or on an abort.

Any operation can be aborted by setting the ABORT bit in the QUADSPI_CR. Once the abort is completed, the BUSY bit and the ABORT bit are automatically reset, and the FIFO is flushed.

Note: Some Flash memories might misbehave if a write operation to a status registers is aborted.

15.3.14 nCS behavior

By default, nCS is high, deselecting the external Flash memory. nCS falls before an operation begins and rises as soon as it finishes.

When CKMODE = 0 (“mode0”, where CLK stays low when no operation is in progress) nCS falls one CLK cycle before an operation first rising CLK edge, and nCS rises one CLK cycle after the operation final rising CLK edge, as shown in *Figure 34*.

Figure 34. nCS when CKMODE = 0 (T = CLK period)

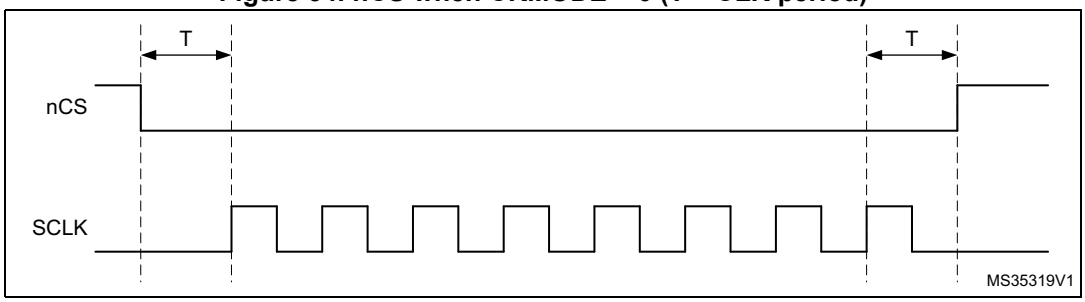

When CKMODE=1 (“mode3”, where CLK goes high when no operation is in progress) and DDRM=0 (SDR mode), nCS still falls one CLK cycle before an operation first rising CLK edge, and nCS rises one CLK cycle after the operation final rising CLK edge, as shown in *Figure 35*.

Figure 35. nCS when CKMODE = 1 in SDR mode (T = CLK period)

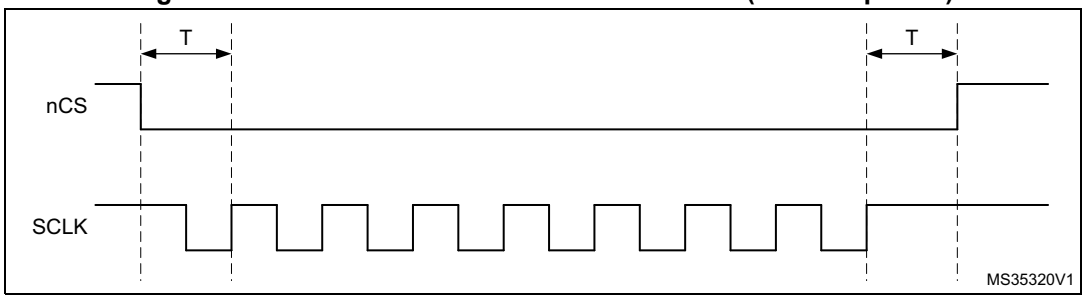

When CKMODE = 1 (“mode3”) and DDRM = 1 (DDR mode), nCS falls one CLK cycle before an operation first rising CLK edge, and nCS rises one CLK cycle after the operation final active rising CLK edge, as shown in *Figure 36*. Because DDR operations must finish with a falling edge, CLK is low when nCS rises, and CLK rises back up one half of a CLK cycle afterwards.

Figure 36. nCS when CKMODE = 1 in DDR mode (T = CLK period)

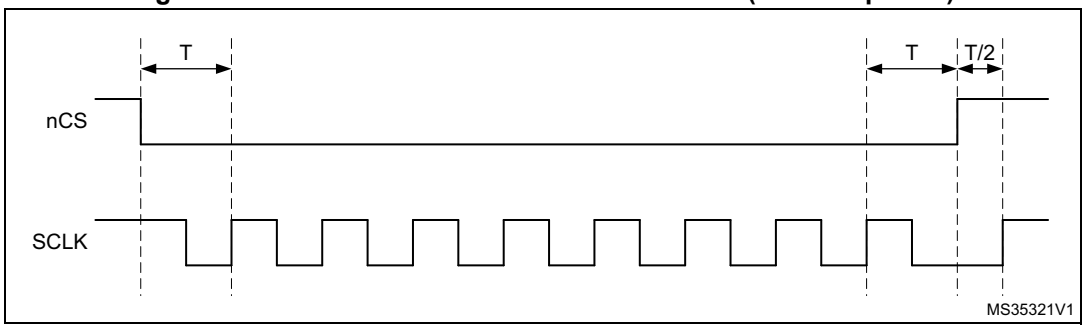

When the FIFO stays full in a read operation or if the FIFO stays empty in a write operation, the operation stalls and CLK stays low until firmware services the FIFO. If an abort occurs when an operation is stalled, nCS rises just after the abort is requested and then CLK rises one half of a CLK cycle later, as shown in *Figure 37*.

Figure 37. nCS when CKMODE = 1 with an abort (T = CLK period)

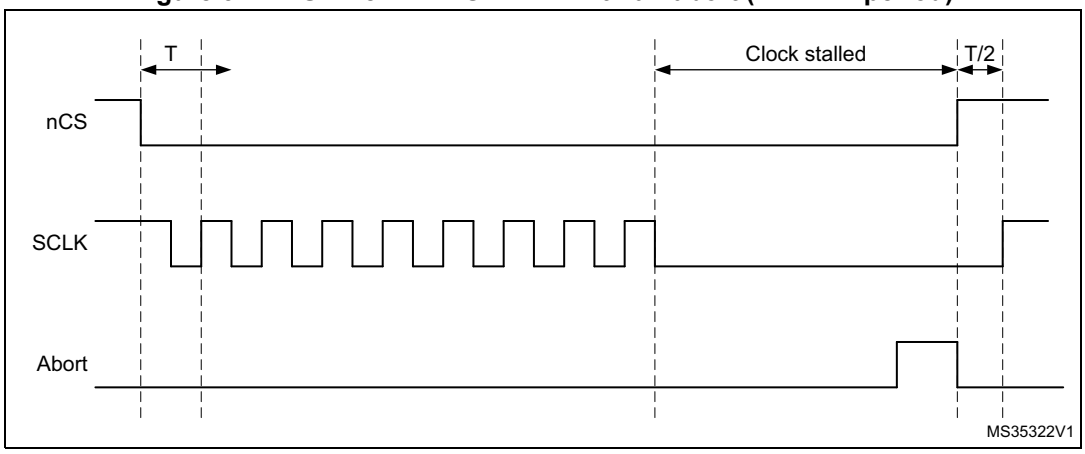

When not in dual-flash mode (DFM = 0), only FLASH 1 is accessed and thus the BK2_nCS stays high. In dual-flash mode, BK2_nCS behaves exactly the same as BK1_nCS. Thus, if there is a FLASH 2 and if the application always stays in dual-flash mode, then FLASH 2 may use BK1_nCS and the pin outputting BK2_nCS can be used for other functions.

15.4 QUADSPI interrupts

An interrupt can be produced on the following events:

- Timeout
- Status match
- FIFO threshold
- Transfer complete
- Transfer error

Separate interrupt enable bits are available for flexibility.

Table 50. QUADSPI interrupt requests

Interrupt event	Event flag	Enable control bit
Timeout	TOF	TOIE
Status match	SMF	SMIE
FIFO threshold	FTF	FTIE
Transfer complete	TCF	TCIE
Transfer error	TEF	TEIE

15.5 QUADSPI registers

15.5.1 QUADSPI control register (QUADSPI_CR)

Address offset: 0x0000

Reset value: 0x0000 0000

31	30	29	28	27	26	25	24	23	22	21	20	19	18	17	16
PRESCALER								PMM	APMS	Res.	TOIE	SMIE	FTIE	TCIE	TEIE
rw	rw	rw	rw	rw	rw	rw	rw	rw	rw		rw	rw	rw	rw	rw

15	14	13	12	11	10	9	8	7	6	5	4	3	2	1	0
Res.	Res.	Res.	Res.	FTHRES				FSEL	DFM	Res.	SSHIFT	TCEN	DMAEN	ABORT	EN
				rw	rw	rw	rw	rw	rw		rw	rw	w1s	rw	w1s

Bits 31: 24 **PRESCALER[7:0]**: Clock prescaler

This field defines the scaler factor for generating CLK based on the AHB clock (value+1).

0: $F_{CLK} = F_{AHB}$, AHB clock used directly as QUADSPI CLK (prescaler bypassed)

1: $F_{CLK} = F_{AHB}/2$

2: $F_{CLK} = F_{AHB}/3$

...

255: $F_{CLK} = F_{AHB}/256$

For odd clock division factors, CLK's duty cycle is not 50%. The clock signal remains high one cycle longer than it stays low.

This field can be modified only when BUSY = 0.

Bit 23 **PMM**: Polling match mode

This bit indicates which method should be used for determining a "match" during automatic polling mode.

0: AND match mode. SMF is set if all the unmasked bits received from the Flash memory match the corresponding bits in the match register.

1: OR match mode. SMF is set if any one of the unmasked bits received from the Flash memory matches its corresponding bit in the match register.

This bit can be modified only when BUSY = 0.

Bit 22 **APMS**: Automatic poll mode stop

This bit determines if automatic polling is stopped after a match.

0: Automatic polling mode is stopped only by abort or by disabling the QUADSPI.

1: Automatic polling mode stops as soon as there is a match.

This bit can be modified only when BUSY = 0.

Bit 21 Reserved, must be kept at reset value.

Bit 20 **TOIE**: TimeOut interrupt enable

This bit enables the TimeOut interrupt.

0: Interrupt disable

1: Interrupt enabled

Bit 19 **SMIE**: Status match interrupt enable

This bit enables the status match interrupt.

0: Interrupt disable

1: Interrupt enabled

Bit 18 **FTIE**: FIFO threshold interrupt enable

This bit enables the FIFO threshold interrupt.

0: Interrupt disabled

1: Interrupt enabled

Bit 17 **TCIE**: Transfer complete interrupt enable

This bit enables the transfer complete interrupt.

0: Interrupt disabled

1: Interrupt enabled

Bit 16 **TEIE**: Transfer error interrupt enable

This bit enables the transfer error interrupt.

0: Interrupt disable

1: Interrupt enabled

Bits 15:12 Reserved, must be kept at reset value.

Bits 11: 8 **FTHRES[3:0]** FIFO threshold level

Defines, in indirect mode, the threshold number of bytes in the FIFO that will cause the FIFO threshold flag (FTF, QUADSPI_SR[2]) to be set.
In indirect write mode (FMODE = 00):
0: FTF is set if there are 1 or more free bytes available to be written to in the FIFO
1: FTF is set if there are 2 or more free bytes available to be written to in the FIFO
...
15: FTF is set if there are 16 free bytes available to be written to in the FIFO
In indirect read mode (FMODE = 01):
0: FTF is set if there are 1 or more valid bytes that can be read from the FIFO
1: FTF is set if there are 2 or more valid bytes that can be read from the FIFO
...
15: FTF is set if there are 16 valid bytes that can be read from the FIFO
If DMAEN = 1, then the DMA controller for the corresponding channel must be disabled before changing the FTHRES value.

Bit 7 **FSEL**: Flash memory selection

This bit selects the Flash memory to be addressed in single flash mode (when DFM = 0).
0: FLASH 1 selected
1: FLASH 2 selected
This bit can be modified only when BUSY = 0.
This bit is ignored when DFM = 1.

Bit 6 **DFM**: Dual-flash mode

This bit activates dual-flash mode, where two external Flash memories are used simultaneously to double throughput and capacity.
0: Dual-flash mode disabled
1: Dual-flash mode enabled
This bit can be modified only when BUSY = 0.

Bit 5 Reserved, must be kept at reset value.

Bit 4 **SSHIFT**: Sample shift

By default, the QUADSPI samples data 1/2 of a CLK cycle after the data is driven by the Flash memory. This bit allows the data is to be sampled later in order to account for external signal delays.
0: No shift
1: 1/2 cycle shift
Firmware must assure that SSHIFT = 0 when in DDR mode (when DDRM = 1).
This field can be modified only when BUSY = 0.

Bit 3 **TCEN**: Timeout counter enable

This bit is valid only when memory-mapped mode (FMODE = 11) is selected. Activating this bit causes the chip select (nCS) to be released (and thus reduces consumption) if there has not been an access after a certain amount of time, where this time is defined by TIMEOUT[15:0] (QUADSPI_LPTR).

Enable the timeout counter.

By default, the QUADSPI never stops its prefetch operation, keeping the previous read operation active with nCS maintained low, even if no access to the Flash memory occurs for a long time. Since Flash memories tend to consume more when nCS is held low, the application might want to activate the timeout counter (TCEN = 1, QUADSPI_CR[3]) so that nCS is released after a period of TIMEOUT[15:0] (QUADSPI_LPTR) cycles have elapsed without an access since when the FIFO becomes full with prefetch data.

0: Timeout counter is disabled, and thus the chip select (nCS) remains active indefinitely after an access in memory-mapped mode.

1: Timeout counter is enabled, and thus the chip select is released in memory-mapped mode after TIMEOUT[15:0] cycles of Flash memory inactivity.

This bit can be modified only when BUSY = 0.

Bit 2 **DMAEN**: DMA enable

In indirect mode, DMA can be used to input or output data via the QUADSPI_DR register. DMA transfers are initiated when the FIFO threshold flag, FTF, is set.

0: DMA is disabled for indirect mode

1: DMA is enabled for indirect mode

Bit 1 **ABORT**: Abort request

This bit aborts the on-going command sequence. It is automatically reset once the abort is complete.

This bit stops the current transfer.

In polling mode or memory-mapped mode, this bit also reset the APM bit or the DM bit.

0: No abort requested

1: Abort requested

Bit 0 **EN**: Enable

Enable the QUADSPI.

0: QUADSPI is disabled

1: QUADSPI is enabled

15.5.2 QUADSPI device configuration register (QUADSPI_DCR)

Address offset: 0x0004

Reset value: 0x0000 0000

31	30	29	28	27	26	25	24	23	22	21	20	19	18	17	16
Res.	Res.	Res.	Res.	Res.	Res.	Res.	Res.	Res.	Res.	Res.	FSIZE				
											rw	rw	rw	rw	rw

15	14	13	12	11	10	9	8	7	6	5	4	3	2	1	0
Res.	Res.	Res.	Res.	Res.	CSHT			Res.	Res.	Res.	Res.	Res.	Res.	Res.	CK-MODE
					rw	rw	rw								rw

Bits 31: 21 Reserved, must be kept at reset value.

Bits 20: 16 **FSIZE[4:0]**: Flash memory size

This field defines the size of external memory using the following formula:
Number of bytes in Flash memory = $2^{[FSIZE+1]}$
FSIZE+1 is effectively the number of address bits required to address the Flash memory. The Flash memory capacity can be up to 4GB (addressed using 32 bits) in indirect mode, but the addressable space in memory-mapped mode is limited to 256MB.
If DFM = 1, FSIZE indicates the total capacity of the two Flash memories together.
This field can be modified only when BUSY = 0.

Bits 15: 11 Reserved, must be kept at reset value.

Bits 10:8 **CSHT[2:0]**: Chip select high time

CSHT+1 defines the minimum number of CLK cycles which the chip select (nCS) must remain high between commands issued to the Flash memory.
0: nCS stays high for at least 1 cycle between Flash memory commands
1: nCS stays high for at least 2 cycles between Flash memory commands
...
7: nCS stays high for at least 8 cycles between Flash memory commands
This field can be modified only when BUSY = 0.

Bits 7: 1 Reserved, must be kept at reset value.

Bit 0 **CKMODE**: Mode 0 / mode 3

This bit indicates the level that CLK takes between commands (when nCS = 1).
0: CLK must stay low while nCS is high (chip select released). This is referred to as mode 0.
1: CLK must stay high while nCS is high (chip select released). This is referred to as mode 3.
This field can be modified only when BUSY = 0.

15.5.3 QUADSPI status register (QUADSPI_SR)

Address offset: 0x0008

Reset value: 0x0000 0000

31	30	29	28	27	26	25	24	23	22	21	20	19	18	17	16
Res.	Res.	Res.	Res.	Res.	Res.	Res.	Res.	Res.	Res.	Res.	Res.	Res.	Res.	Res.	Res.

15	14	13	12	11	10	9	8	7	6	5	4	3	2	1	0
Res.	Res.	Res.	FLEVEL[4:0]					Res.	Res.	BUSY	TOF	SMF	FTF	TCF	TEF
			r	r	r	r	r			r	r	r	r	r	r

Bits 31:13 Reserved, must be kept at reset value.

Bits 12:8 **FLEVEL[4:0]**: FIFO level

This field gives the number of valid bytes which are being held in the FIFO. FLEVEL = 0 when the FIFO is empty, and 16 when it is full. In memory-mapped mode and in automatic status polling mode, FLEVEL is zero.

Bits 7:6 Reserved, must be kept at reset value.

Bit 5 **BUSY**: Busy

This bit is set when an operation is on going. This bit clears automatically when the operation with the Flash memory is finished and the FIFO is empty.

Bit 4 **TOF**: Timeout flag

This bit is set when timeout occurs. It is cleared by writing 1 to CTOF.

Bit 3 **SMF**: Status match flag

This bit is set in automatic polling mode when the unmasked received data matches the corresponding bits in the match register (QUADSPI_PSMAR). It is cleared by writing 1 to CSMF.

Bit 2 **FTF**: FIFO threshold flag

In indirect mode, this bit is set when the FIFO threshold has been reached, or if there is any data left in the FIFO after reads from the Flash memory are complete. It is cleared automatically as soon as threshold condition is no longer true.

In automatic polling mode this bit is set every time the status register is read, and the bit is cleared when the data register is read.

Bit 1 **TCF**: Transfer complete flag

This bit is set in indirect mode when the programmed number of data has been transferred or in any mode when the transfer has been aborted.It is cleared by writing 1 to CTCF.

Bit 0 **TEF**: Transfer error flag

This bit is set in indirect mode when an invalid address is being accessed in indirect mode. It is cleared by writing 1 to CTEF.

15.5.4 QUADSPI flag clear register (QUADSPI_FCR)

Address offset: 0x000C

Reset value: 0x0000 0000

31	30	29	28	27	26	25	24	23	22	21	20	19	18	17	16
Res.	Res.	Res.	Res.	Res.	Res.	Res.	Res.	Res.	Res.	Res.	Res.	Res.	Res.	Res.	Res.
15	14	13	12	11	10	9	8	7	6	5	4	3	2	1	0
Res.	Res.	Res.	Res.	Res.	Res.	Res.	Res.	Res.	Res.	Res.	CTOF	CSMF	Res.	CTCF	CTEF
											w1o	w1o		w1o	w1o

Bits 31: 4 Reserved, must be kept at reset value.

Bit 4 **CTOF**: Clear timeout flag

Writing 1 clears the TOF flag in the QUADSPI_SR register

Bit 3 **CSMF**: Clear status match flag

Writing 1 clears the SMF flag in the QUADSPI_SR register

Bit 2 Reserved, must be kept at reset value.

Bit 1 **CTCF**: Clear transfer complete flag

Writing 1 clears the TCF flag in the QUADSPI_SR register

Bit 0 **CTEF**: Clear transfer error flag

Writing 1 clears the TEF flag in the QUADSPI_SR register

15.5.5 QUADSPI data length register (QUADSPI_DLR)

Address offset: 0x0010

Reset value: 0x0000 0000

31	30	29	28	27	26	25	24	23	22	21	20	19	18	17	16
DL[31:16]															
rw	rw	rw	rw	rw	rw	rw	rw	rw	rw	rw	rw	rw	rw	rw	rw
15	14	13	12	11	10	9	8	7	6	5	4	3	2	1	0
DL[15:0]															
rw	rw	rw	rw	rw	rw	rw	rw	rw	rw	rw	rw	rw	rw	rw	rw

Bits 31:0 **DL[31: 0]**: Data length

Number of data to be retrieved (value+1) in indirect and status-polling modes. A value no greater than 3 (indicating 4 bytes) should be used for status-polling mode.
All 1s in indirect mode means undefined length, where QUADSPI will continue until the end of memory, as defined by FSIZE.
0x0000_0000: 1 byte is to be transferred
0x0000_0001: 2 bytes are to be transferred
0x0000_0002: 3 bytes are to be transferred
0x0000_0003: 4 bytes are to be transferred
...
0xFFFF_FFFD: 4,294,967,294 (4G-2) bytes are to be transferred
0xFFFF_FFFE: 4,294,967,295 (4G-1) bytes are to be transferred
0xFFFF_FFFF: undefined length -- all bytes until the end of Flash memory (as defined by FSIZE) are to be transferred. Continue reading indefinitely if FSIZE = 0x1F.
DL[0] is stuck at ‘1’ in dual-flash mode (DFM = 1) even when ‘0’ is written to this bit, thus assuring that each access transfers an even number of bytes.
This field has no effect when in memory-mapped mode (FMODE = 10).
This field can be written only when BUSY = 0.

15.5.6 QUADSPI communication configuration register (QUADSPI_CCR)

Address offset: 0x0014

Reset value: 0x0000 0000

31	30	29	28	27	26	25	24	23	22	21	20	19	18	17	16
DDRM	DHHC	Res.	SIOO	FMODE[1:0]		DMODE		Res.	DCYC[4:0]					ABSIZE	
rw	rw		rw	rw	rw	rw	rw		rw	rw	rw	rw	rw	rw	rw
15	14	13	12	11	10	9	8	7	6	5	4	3	2	1	0
ABMODE		ADSIZE		ADMODE		IMODE		INSTRUCTION[7:0]							
rw	rw	rw	rw	rw	rw	rw	rw	rw	rw	rw	rw	rw	rw	rw	rw

Bit 31 **DDRM**: Double data rate mode

This bit sets the DDR mode for the address, alternate byte and data phase:
0: DDR Mode disabled
1: DDR Mode enabled
This field can be written only when BUSY = 0.

Bit 30 **DHHC**: DDR hold

Delay the data output by 1/4 of the QUADSPI output clock cycle in DDR mode:
0: Delay the data output using analog delay
1: Delay the data output by 1/4 of a QUADSPI output clock cycle.
This feature is only active in DDR mode.
This field can be written only when BUSY = 0.

Bit 29 Reserved, must be kept at reset value.

Bit 28 **SIOO**: Send instruction only once mode

See *Section 15.3.11: Sending the instruction only once on page 340*. This bit has no effect when IMODE = 00.
0: Send instruction on every transaction
1: Send instruction only for the first command
This field can be written only when BUSY = 0.

Bits 27:26 **FMODE[1:0]**: Functional mode

This field defines the QUADSPI functional mode of operation.
00: Indirect write mode
01: Indirect read mode
10: Automatic polling mode
11: Memory-mapped mode
If DMAEN = 1 already, then the DMA controller for the corresponding channel must be disabled before changing the FMODE value.
This field can be written only when BUSY = 0.

Bits 25:24 **DMODE[1:0]**: Data mode

This field defines the data phase's mode of operation:
00: No data
01: Data on a single line
10: Data on two lines
11: Data on four lines
This field also determines the dummy phase mode of operation.
This field can be written only when BUSY = 0.

Bit 23 Reserved, must be kept at reset value.

Bits 22:18 **DCYC[4:0]**: Number of dummy cycles

This field defines the duration of the dummy phase. In both SDR and DDR modes, it specifies a number of CLK cycles (0-31).
This field can be written only when BUSY = 0.

Bits 17:16 **ABSIZE[1:0]**: Alternate bytes size

This bit defines alternate bytes size:
00: 8-bit alternate byte
01: 16-bit alternate bytes
10: 24-bit alternate bytes
11: 32-bit alternate bytes
This field can be written only when BUSY = 0.

Bits 15:14 **ABMODE[1:0]**: Alternate bytes mode
This field defines the alternate-bytes phase mode of operation:
00: No alternate bytes
01: Alternate bytes on a single line
10: Alternate bytes on two lines
11: Alternate bytes on four lines
This field can be written only when BUSY = 0.

Bits 13:12 **ADSIZE[1:0]**: Address size
This bit defines address size:
00: 8-bit address
01: 16-bit address
10: 24-bit address
11: 32-bit address
This field can be written only when BUSY = 0.

Bits 11:10 **ADMODE[1:0]**: Address mode
This field defines the address phase mode of operation:
00: No address
01: Address on a single line
10: Address on two lines
11: Address on four lines
This field can be written only when BUSY = 0.

Bits 9:8 **IMODE[1:0]**: Instruction mode
This field defines the instruction phase mode of operation:
00: No instruction
01: Instruction on a single line
10: Instruction on two lines
11: Instruction on four lines
This field can be written only when BUSY = 0.

Bits 7: 0 **INSTRUCTION[7: 0]**: Instruction
Instruction to be send to the external SPI device.
This field can be written only when BUSY = 0.

15.5.7 QUADSPI address register (QUADSPI_AR)

Address offset: 0x0018

Reset value: 0x0000 0000

31	30	29	28	27	26	25	24	23	22	21	20	19	18	17	16
ADDRESS[31:16]															
rw	rw	rw	rw	rw	rw	rw	rw	rw	rw	rw	rw	rw	rw	rw	rw

15	14	13	12	11	10	9	8	7	6	5	4	3	2	1	0
ADDRESS[15:0]															
rw	rw	rw	rw	rw	rw	rw	rw	rw	rw	rw	rw	rw	rw	rw	rw

Bits 31:0 **ADDRESS[31 0]**: Address

Address to be send to the external Flash memory

Writes to this field are ignored when BUSY = 0 or when FMODE = 11 (memory-mapped mode).

In dual flash mode, ADDRESS[0] is automatically stuck to ‘0’ as the address should always be even

15.5.8 QUADSPI alternate bytes registers (QUADSPI_ABR)

Address offset: 0x001C

Reset value: 0x0000 0000

31	30	29	28	27	26	25	24	23	22	21	20	19	18	17	16
ALTERNATE[31:16]															
rw	rw	rw	rw	rw	rw	rw	rw	rw	rw	rw	rw	rw	rw	rw	rw
15	14	13	12	11	10	9	8	7	6	5	4	3	2	1	0
ALTERNATE[15:0]															
rw	rw	rw	rw	rw	rw	rw	rw	rw	rw	rw	rw	rw	rw	rw	rw

Bits 31: 0 **ALTERNATE[31: 0]**: Alternate Bytes

Optional data to be send to the external SPI device right after the address.

This field can be written only when BUSY = 0.

15.5.9 QUADSPI data register (QUADSPI_DR)

Address offset: 0x0020

Reset value: 0x0000 0000

31	30	29	28	27	26	25	24	23	22	21	20	19	18	17	16
DATA[31:16]															
rw	rw	rw	rw	rw	rw	rw	rw	rw	rw	rw	rw	rw	rw	rw	rw
15	14	13	12	11	10	9	8	7	6	5	4	3	2	1	0
DATA[15:0]															
rw	rw	rw	rw	rw	rw	rw	rw	rw	rw	rw	rw	rw	rw	rw	rw

Bits 31: 0 **DATA[31: 0]**: Data

Data to be sent/received to/from the external SPI device.

In indirect write mode, data written to this register is stored on the FIFO before it is sent to the Flash memory during the data phase. If the FIFO is too full, a write operation is stalled until the FIFO has enough space to accept the amount of data being written.

In indirect read mode, reading this register gives (via the FIFO) the data which was received from the Flash memory. If the FIFO does not have as many bytes as requested by the read operation and if BUSY=1, the read operation is stalled until enough data is present or until the transfer is complete, whichever happens first.

In automatic polling mode, this register contains the last data read from the Flash memory (without masking).

Word, halfword, and byte accesses to this register are supported. In indirect write mode, a byte write adds 1 byte to the FIFO, a halfword write 2, and a word write 4. Similarly, in indirect read mode, a byte read removes 1 byte from the FIFO, a halfword read 2, and a word read 4. Accesses in indirect mode must be aligned to the bottom of this register: a byte read must read DATA[7:0] and a halfword read must read DATA[15:0].

15.5.10 QUADSPI polling status mask register (QUADSPI _PSMKR)

Address offset: 0x0024

Reset value: 0x0000 0000

31	30	29	28	27	26	25	24	23	22	21	20	19	18	17	16
MASK[31:16]															
rw	rw	rw	rw	rw	rw	rw	rw	rw	rw	rw	rw	rw	rw	rw	rw
15	14	13	12	11	10	9	8	7	6	5	4	3	2	1	0
MASK[15:0]															
rw	rw	rw	rw	rw	rw	rw	rw	rw	rw	rw	rw	rw	rw	rw	rw

Bits 31: 0 **MASK[31: 0]**: Status mask

Mask to be applied to the status bytes received in polling mode.

For bit n:

0: Bit n of the data received in automatic polling mode is masked and its value is not considered in the matching logic

1: Bit n of the data received in automatic polling mode is unmasked and its value is considered in the matching logic

This field can be written only when BUSY = 0.

15.5.11 QUADSPI polling status match register (QUADSPI _PSMAR)

Address offset: 0x0028

Reset value: 0x0000 0000

31	30	29	28	27	26	25	24	23	22	21	20	19	18	17	16
MATCH[31:16]															
rw	rw	rw	rw	rw	rw	rw	rw	rw	rw	rw	rw	rw	rw	rw	rw
15	14	13	12	11	10	9	8	7	6	5	4	3	2	1	0
MATCH[15:0]															
rw	rw	rw	rw	rw	rw	rw	rw	rw	rw	rw	rw	rw	rw	rw	rw

Bits 31: 0 **MATCH[31: 0]**: Status match

Value to be compared with the masked status register to get a match.
This field can be written only when BUSY = 0.

15.5.12 QUADSPI polling interval register (QUADSPI _PIR)

Address offset: 0x002C

Reset value: 0x0000 0000

31	30	29	28	27	26	25	24	23	22	21	20	19	18	17	16
Res.	Res.	Res.	Res.	Res.	Res.	Res.	Res.	Res.	Res.	Res.	Res.	Res.	Res.	Res.	Res.
15	14	13	12	11	10	9	8	7	6	5	4	3	2	1	0
INTERVAL[15:0]															
rw	rw	rw	rw	rw	rw	rw	rw	rw	rw	rw	rw	rw	rw	rw	rw

Bits 31: 16 Reserved, must be kept at reset value.

Bits 15: 0 **INTERVAL[15: 0]**: Polling interval

Number of CLK cycles between to read during automatic polling phases.
This field can be written only when BUSY = 0.

15.5.13 QUADSPI low-power timeout register (QUADSPI_LPTR)

Address offset: 0x0030

Reset value: 0x0000 0000

31	30	29	28	27	26	25	24	23	22	21	20	19	18	17	16
Res.	Res.	Res.	Res.	Res.	Res.	Res.	Res.	Res.	Res.	Res.	Res.	Res.	Res.	Res.	Res.
15	14	13	12	11	10	9	8	7	6	5	4	3	2	1	0
TIMEOUT[15:0]															
rw	rw	rw	rw	rw	rw	rw	rw	rw	rw	rw	rw	rw	rw	rw	rw

Bits 31: 16 Reserved, must be kept at reset value.

Bits 15: 0 **TIMEOUT[15: 0]**: Timeout period

After each access in memory-mapped mode, the QUADSPI prefetches the subsequent bytes and holds these bytes in the FIFO. This field indicates how many CLK cycles the QUADSPI waits after the FIFO becomes full until it raises nCS, putting the Flash memory in a lower-consumption state.

This field can be written only when BUSY = 0.

15.5.14 QUADSPI register map

Table 51. QUADSPI register map and reset values

Offset	Register	31	30	29	28	27	26	25	24	23	22	21	20	19	18	17	16	15	14	13	12	11	10	9	8	7	6	5	4	3	2	1	0
0x0000	**QUADSPI_CR**	PRESCALER[7:0]								PMM	APMS	Res.	TOIE	SMIE	FTIE	TCIE	TEIE	Res.	Res.	Res.	Res.	FTHRES [3:0]				FSEL	DFM	Res.	SSHIFT	TCEN	DMAEN	ABORT	EN
	Reset value	0	0	0	0	0	0	0	0	0	0		0	0	0	0	0					0	0	0	0	0	0		0	0	0	0	0
0x0004	**QUADSPI_DCR**	Res.	Res.	Res.	Res.	Res.	Res.	Res.	Res.	Res.	Res.	Res.	FSIZE[4:0]					Res.	Res.	Res.	Res.	Res.	CSHT			Res.	Res.	Res.	Res.	Res.	Res.	Res.	CKMODE
	Reset value												0	0	0	0	0						0	0	0								0
0x0008	**QUADSPI_SR**	Res.	Res.	Res.	Res.	Res.	Res.	Res.	Res.	Res.	Res.	Res.	Res.	Res.	Res.	Res.	Res.	Res.	Res.	FLEVEL[5:0]						Res.	Res.	BUSY	TOF	SMF	FTF	TCF	TEF
	Reset value																			0	0	0	0	0	0			0	0	0	0	0	0
0x000C	**QUADSPI_FCR**	Res.	Res.	Res.	Res.	Res.	Res.	Res.	Res.	Res.	Res.	Res.	Res.	Res.	Res.	Res.	Res.	Res.	Res.	Res.	Res.	Res.	Res.	Res.	Res.	Res.	Res.	Res.	CTOF	CSMF	Res.	CTCF	CTEF
	Reset value																												0	0		0	0
0x0010	**QUADSPI_DLR**	DL[31:0]																															
	Reset value	0	0	0	0	0	0	0	0	0	0	0	0	0	0	0	0	0	0	0	0	0	0	0	0	0	0	0	0	0	0	0	0
0x0014	**QUADSPI_CCR**	DDRM	DHHC	Res.	SIOO	FMODE[1:0]		DMODE[1:0]		Res.	DCYC[4:0]					ABSIZE[1:0]		ABMODE[1:0]		ADSIZE[1:0]		ADMODE[1:0]		IMODE[1:0]		INSTRUCTION[7:0]							
	Reset value	0	0		0	0	0	0	0		0	0	0	0	0	0	0	0	0	0	0	0	0	0	0	0	0	0	0	0	0	0	0
0x0018	**QUADSPI_AR**	ADDRESS[31:0]																															
	Reset value	0	0	0	0	0	0	0	0	0	0	0	0	0	0	0	0	0	0	0	0	0	0	0	0	0	0	0	0	0	0	0	0
0x001C	**QUADSPI_ABR**	ALTERNATE[31:0]																															
	Reset value	0	0	0	0	0	0	0	0	0	0	0	0	0	0	0	0	0	0	0	0	0	0	0	0	0	0	0	0	0	0	0	0
0x0020	**QUADSPI_DR**	DATA[31:0]																															
	Reset value	0	0	0	0	0	0	0	0	0	0	0	0	0	0	0	0	0	0	0	0	0	0	0	0	0	0	0	0	0	0	0	0
0x0024	**QUADSPI_ PSMKR**	MASK[31:0]																															
	Reset value	0	0	0	0	0	0	0	0	0	0	0	0	0	0	0	0	0	0	0	0	0	0	0	0	0	0	0	0	0	0	0	0
0x0028	**QUADSPI_ PSMAR**	MATCH[31:0]																															
	Reset value	0	0	0	0	0	0	0	0	0	0	0	0	0	0	0	0	0	0	0	0	0	0	0	0	0	0	0	0	0	0	0	0
0x002C	**QUADSPI_PIR**	Res.	Res.	Res.	Res.	Res.	Res.	Res.	Res.	Res.	Res.	Res.	Res.	Res.	Res.	Res.	Res.	INTERVAL[15:0]															
	Reset value																	0	0	0	0	0	0	0	0	0	0	0	0	0	0	0	0
0x0030	**QUADSPI_ LPTR**	Res.	Res.	Res.	Res.	Res.	Res.	Res.	Res.	Res.	Res.	Res.	Res.	Res.	Res.	Res.	Res.	TIMEOUT[15:0]															
	Reset value																	0	0	0	0	0	0	0	0	0	0	0	0	0	0	0	0

Refer to *Section 2.2.2* for the register boundary addresses.

16 Analog-to-digital converters (ADC)

16.1 Introduction

This section describes the implementation of up to 2 ADCs

- ADC1 and ADC2 are tightly coupled and can operate in dual mode (ADC1 is master).

Each ADC consists of a 12-bit successive approximation analog-to-digital converter.

Each ADC has up to 19 multiplexed channels. A/D conversion of the various channels can be performed in single, continuous, scan or discontinuous mode. The result of the ADC is stored in a left-aligned or right-aligned 16-bit data register.

The ADCs are mapped on the AHB bus to allow fast data handling.

The analog watchdog features allow the application to detect if the input voltage goes outside the user-defined high or low thresholds.

A built-in hardware oversampler allows to improve analog performances while off-loading the related computational burden from the CPU.

An efficient low-power mode is implemented to allow very low consumption at low frequency.

16.2 ADC main features

- High-performance features
  - Up to 2x ADCs which can operate in dual mode
  - ADC1 is connected to 16 external channels + 3 internal channels
  - ADC2 is connected to 16 external channels + 2 internal channels
  - 12, 10, 8 or 6-bit configurable resolution
  - ADC conversion time:
    Fast channels: 0.188 µs for 12-bit resolution (5.33 Ms/s)
    Slow channels: 0.238 µs for 12-bit resolution (4.21 Ms/s)
  - ADC conversion time is independent from the AHB bus clock frequency
  - Faster conversion time by lowering resolution: 0.16 µs for 10-bit resolution
  - Can manage Single-ended or differential inputs (programmable per channels)
  - AHB slave bus interface to allow fast data handling
  - Self-calibration
  - Channel-wise programmable sampling time
  - Up to four injected channels (analog inputs assignment to regular or injected channels is fully configurable)
  - Hardware assistant to prepare the context of the injected channels to allow fast context switching
  - Data alignment with in-built data coherency
  - Data can be managed by GP-DMA for regular channel conversions
  - 4 dedicated data registers for the injected channels
- Oversampler
  - 16-bit data register
  - Oversampling ratio adjustable from 2 to 256x
  - Programmable data shift up to 8-bit
- Low-power features
  - Speed adaptive low-power mode to reduce ADC consumption when operating at low frequency
  - Allows slow bus frequency application while keeping optimum ADC performance (0.188 µs conversion time for fast channels can be kept whatever the AHB bus clock frequency)
  - Provides automatic control to avoid ADC overrun in low AHB bus clock frequency application (auto-delayed mode)
- Each ADC features an external analog input channel
  - Up to 5 fast channels from dedicated GPIO pads
  - Up to 11 slow channels from dedicated GPIO pads
- In addition, there are five internal dedicated channels
  - The internal reference voltage (V_{REFINT}), connected to ADC1
  - The internal temperature sensor (V_{TS}), connected to ADC1
  - The V_{BAT} monitoring channel ($V_{BAT}/3$), connected to ADC1
  - DAC1 and DAC2 internal channels, connected to ADC2 or ADC1 (single ADC devices)

- Start-of-conversion can be initiated:
  - by software for both regular and injected conversions
  - by hardware triggers with configurable polarity (internal timers events or GPIO input events) for both regular and injected conversions
- Conversion modes
  - Each ADC can convert a single channel or can scan a sequence of channels
  - Single mode converts selected inputs once per trigger
  - Continuous mode converts selected inputs continuously
  - Discontinuous mode
- Dual ADC mode for ADC1 and 2 (on devices with 2 ADCs)
- Interrupt generation at ADC ready, the end of sampling, the end of conversion (regular or injected), end of sequence conversion (regular or injected), analog watchdog 1, 2 or 3 or overrun events
- 3 analog watchdogs per ADC
- ADC supply requirements: 1.62 to 3.6 V
- ADC input range: $V_{REF-} \leq V_{IN} \leq V_{REF+}$

Figure 38 shows the block diagram of one ADC.

16.3 ADC implementation

Table 52. ADC interfaces

References	ADC1	ADC2
STM32L433xx, STM32L443xx	X(1)	-

1. Since the devices feature one single ADC, dual mode is not supported.

16.4 ADC functional description

16.4.1 ADC block diagram

Figure 38 shows the ADC block diagram and *Table 54* gives the ADC pin description.

Figure 38. ADC block diagram

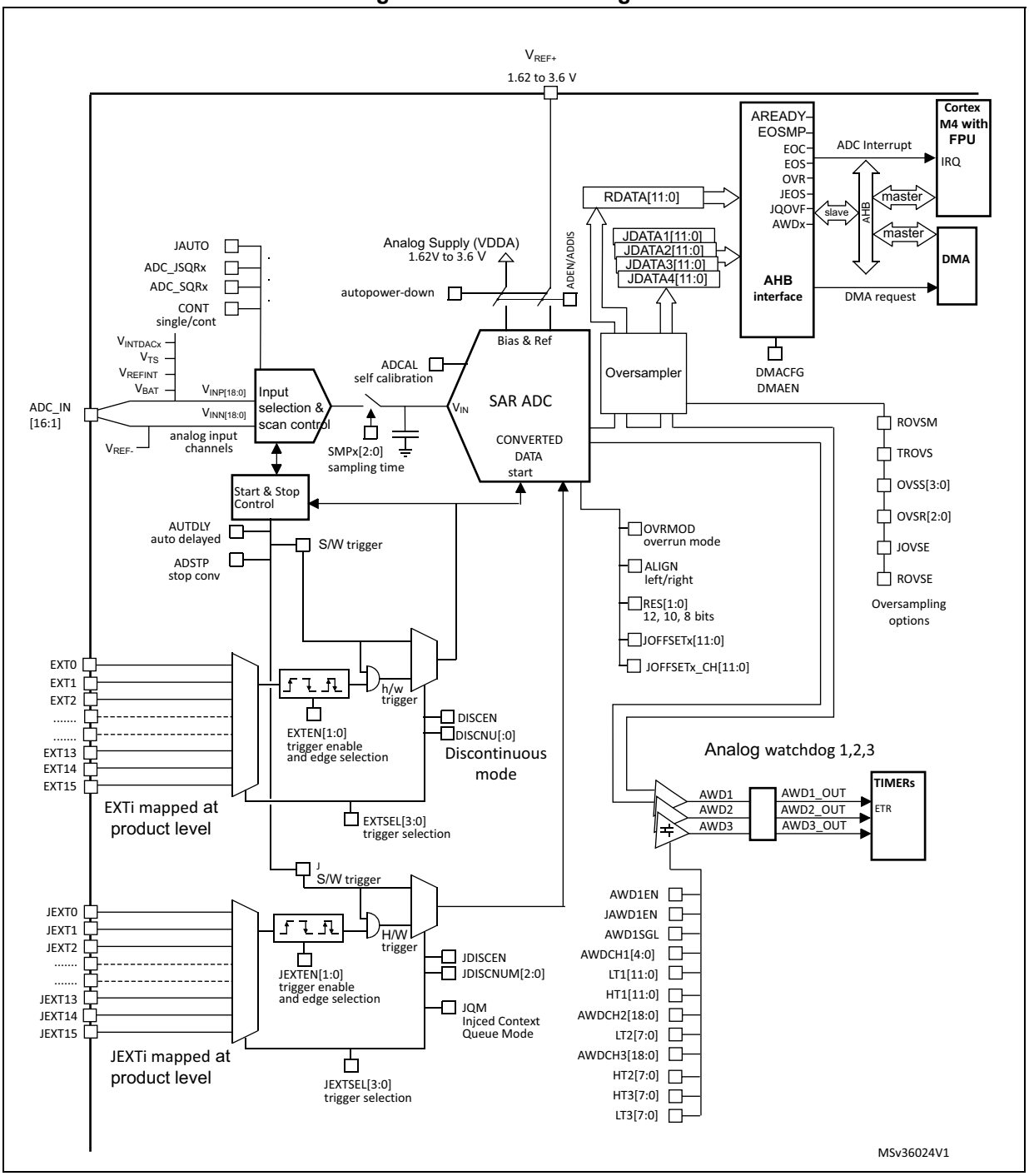

16.4.2 Pins and internal signals

Table 53. ADC internal signals

Internal signal name	Signal type	Description
EXT[15:0]	Inputs	Up to 16 external trigger inputs for the regular conversions (can be connected to on-chip timers). These inputs are shared between the ADC master and the ADC slave.
JEXT[15:0]	Inputs	Up to 16 external trigger inputs for the injected conversions (can be connected to on-chip timers). These inputs are shared between the ADC master and the ADC slave.
ADC1_AWDx_OUT ADC2_AWDx_OUT	Output	Internal analog watchdog output signal connected to on-chip timers. (x = Analog watchdog number 1,2,3)
V_{TS}	Input	Output voltage from internal temperature sensor
V_{REFINT}	Input	Output voltage from internal reference voltage
V_{BAT}	Input supply	External battery voltage supply

Table 54. ADC pins

Name	Signal type	Comments
V_{REF+}	Input, analog reference positive	The higher/positive reference voltage for the ADC, $1.62\ V \le V_{REF+} \le V_{DDA}$
V_{DDA}	Input, analog supply	Analog power supply equal V_{DDA}: $1.62\ V \le V_{DDA} \le 3.6\ V$
V_{REF-}	Input, analog reference negative	The lower/negative reference voltage for the ADC, $V_{REF-} = V_{SSA}$
V_{SSA}	Input, analog supply ground	Ground for analog power supply equal to V_{SS}
V_{INP}[18:0]	Positive input analog channels for each ADC	Connected either to external channels: ADC_IN*i* or internal channels.
V_{INN}[18:0]	Negative input analog channels for each ADC	Connected to V_{REF-} or external channels: ADC_IN*i-1*
ADCx_IN16:1	External analog input signals	Up to 16 analog input channels (x = ADC number = 1,2): – 5 fast channels – 11 slow channels

16.4.3 Clocks

Dual clock domain architecture

The dual clock-domain architecture means that the ADCs clock is independent from the AHB bus clock.

The input clock is the same for the three ADCs and can be selected between two different clock sources (see *Figure 39: ADC clock scheme*):

a) The ADC clock can be a specific clock source, coming from the system clock, the PLLSAI1 or the PLLSAI2.

It can be configured in the RCC to deliver up to 80 MHz (PLL output). Refer to RCC Section for more information on how to generate ADC dedicated clock.

To select this scheme, bits CKMODE[1:0] of the ADCx_CCR register must be reset.

b) The ADC clock can be derived from the AHB clock of the ADC bus interface, divided by a programmable factor (1, 2 or 4). In this mode, a programmable divider factor can be selected (/1, 2 or 4 according to bits CKMODE[1:0]).

To select this scheme, bits CKMODE[1:0] of the ADCx_CCR register must be different from “00”.

Note: For option b), a prescaling factor of 1 (CKMODE[1:0]=01) can be used only if the AHB prescaler is set to 1 (HPRE[3:0] = 0xxx in RCC_CFGR register).

Option a) has the advantage of reaching the maximum ADC clock frequency whatever the AHB clock scheme selected. The ADC clock can eventually be divided by the following ratio: 1, 2, 4, 6, 8, 12, 16, 32, 64, 128, 256; using the prescaler configured with bits PRESC[3:0] in the ADCx_CCR register.

Option b) has the advantage of bypassing the clock domain resynchronizations. This can be useful when the ADC is triggered by a timer and if the application requires that the ADC is precisely triggered without any uncertainty (otherwise, an uncertainty of the trigger instant is added by the resynchronizations between the two clock domains).

Figure 39. ADC clock scheme

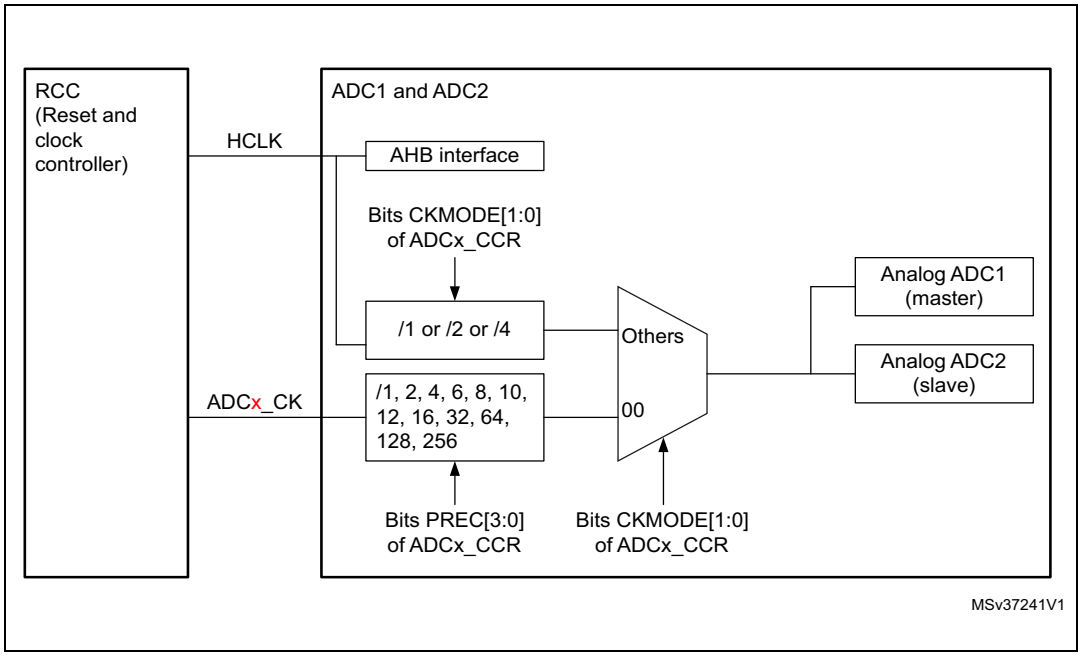

Clock ratio constraint between ADC clock and AHB clock

There are generally no constraints to be respected for the ratio between the ADC clock and the AHB clock except if some injected channels are programmed. In this case, it is mandatory to respect the following ratio:

- F_{HCLK} >= F_{ADC} / 4 if the resolution of all channels are 12-bit or 10-bit
- F_{HCLK} >= F_{ADC} / 3 if there are some channels with resolutions equal to 8-bit (and none with lower resolutions)
- F_{HCLK} >= F_{ADC} / 2 if there are some channels with resolutions equal to 6-bit

16.4.4 ADC1/2 connectivity

ADC1, ADC2 are tightly coupled and share some external channels as described in the below figures.

Figure 40. ADC1 connectivity (devices with 2 ADCs)

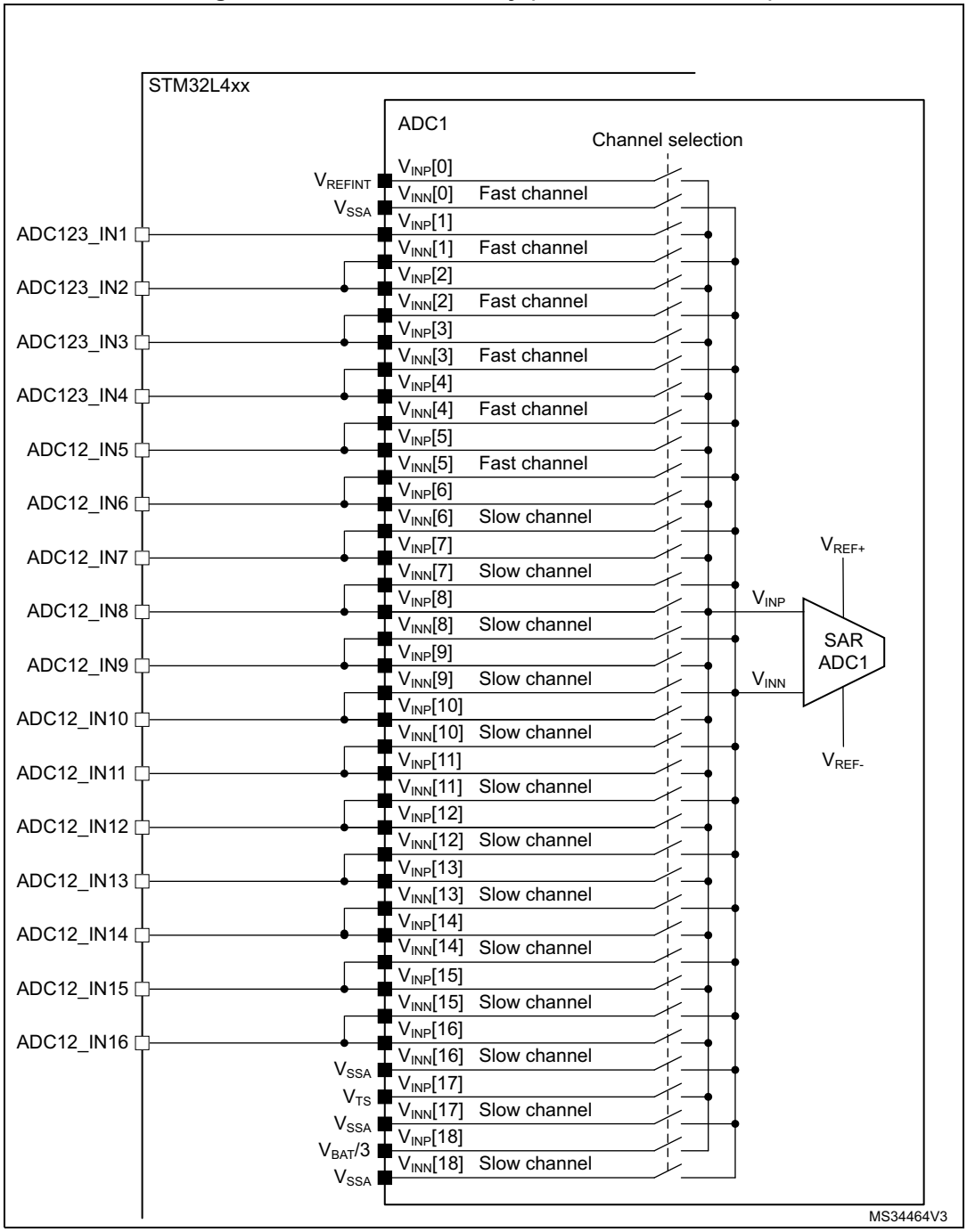

Figure 41. ADC1 connectivity (devices with single ADC)

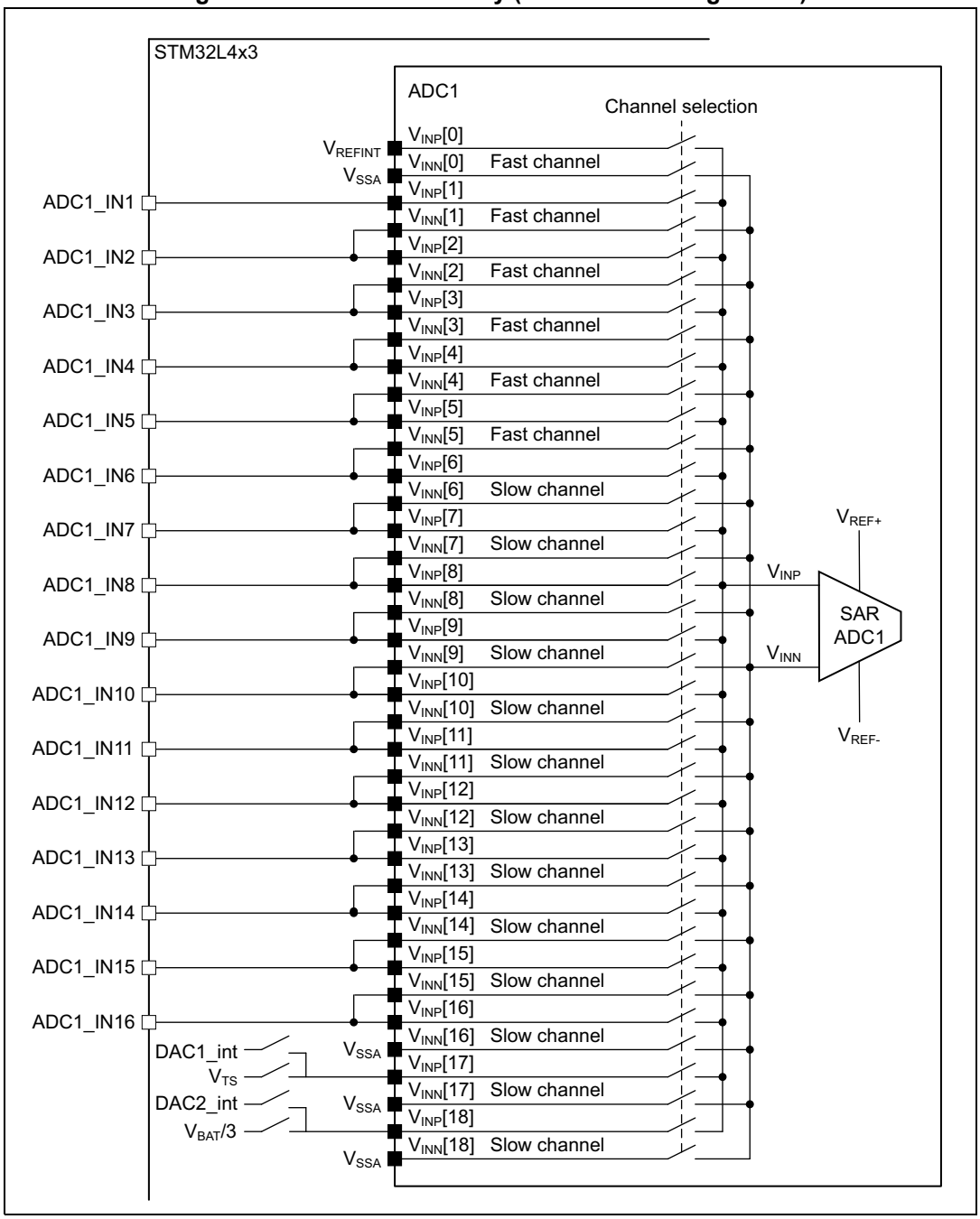

Figure 42. ADC2 connectivity (devices with 2 ADCs)

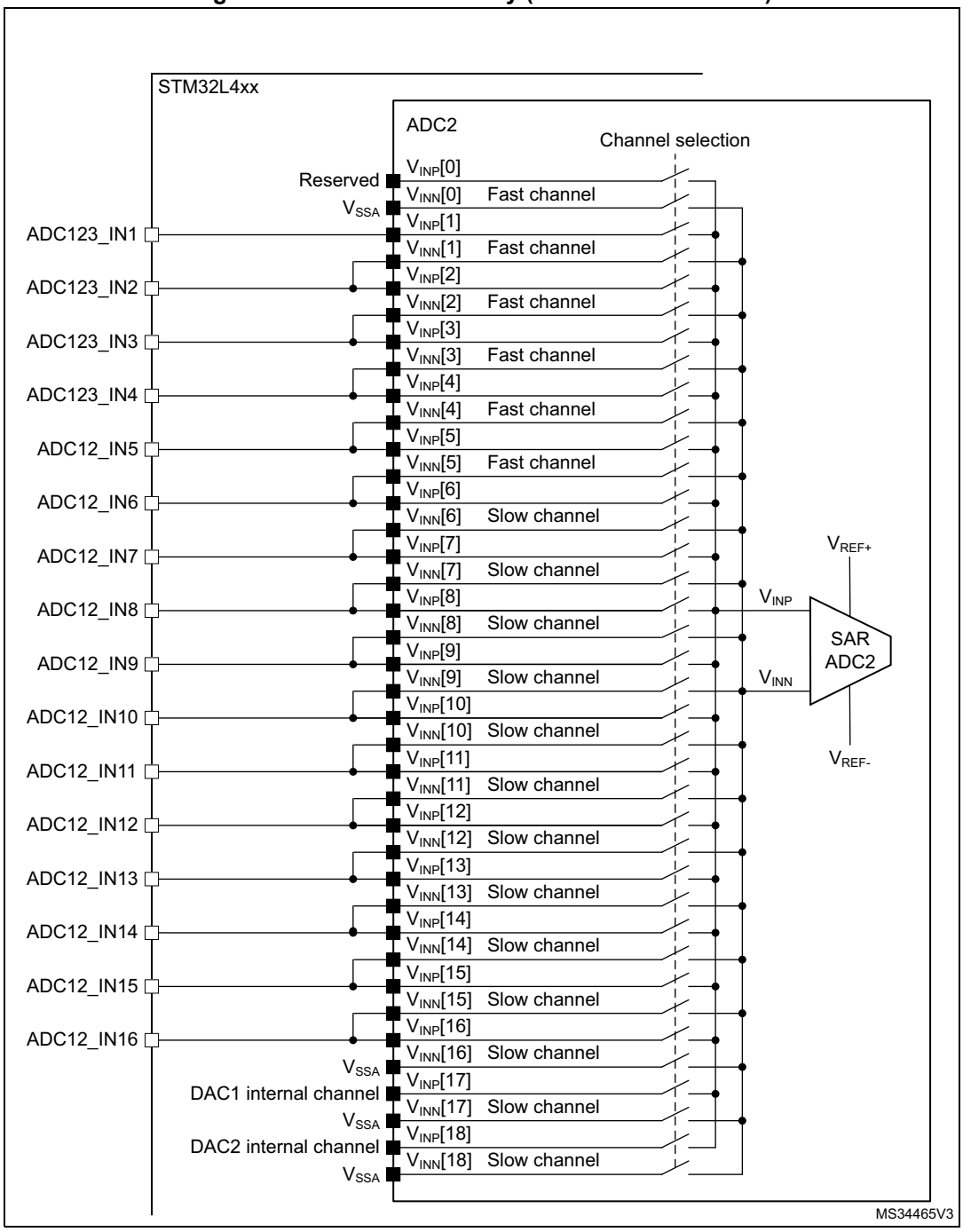

16.4.5 Slave AHB interface

The ADCs implement an AHB slave port for control/status register and data access. The features of the AHB interface are listed below:

- Word (32-bit) accesses
- Single cycle response
- Response to all read/write accesses to the registers with zero wait states.

The AHB slave interface does not support split/retry requests, and never generates AHB errors.

16.4.6 ADC Deep-Power-Down Mode (DEEPPWD) & ADC Voltage Regulator (ADVREGEN)

By default, the ADC is in deep-power-down mode where its supply is internally switched off to reduce the leakage currents (the reset state of bit DEEPPWD is 1 in the ADCx_CR register).

To start ADC operations, it is first needed to exit deep-power-down mode by setting bit DEEPPWD=0.

Then, it is mandatory to enable the ADC internal voltage regulator by setting the bit ADVREGEN=1 into ADCx_CR register. The software must wait for the startup time of the ADC voltage regulator ($T_{ADCVREG_STUP}$) before launching a calibration or enabling the ADC. This delay must be implemented by software.

For the startup time of the ADC voltage regulator, please refer to device datasheet for $T_{ADCVREG_STUP}$ parameter.

After ADC operations are complete, the ADC can be disabled (ADEN=0). It is possible to save power by also disabling the ADC voltage regulator. This is done by writing bit ADVREGEN=0.

Then, to save more power by reducing the leakage currents, it is also possible to re-enter in ADC deep-power-down mode by setting bit DEEPPWD=1 into ADCx_CR register. This is particularly interesting before entering STOP mode.

Note: Writing DEEPPWD=1 automatically disables the ADC voltage regulator and bit ADVREGEN is automatically cleared.

Note: When the internal voltage regulator is disabled (ADVREGEN=0), the internal analog calibration is kept.

In ADC deep-power-down mode (DEEPPWD=1), the internal analog calibration is lost and it is necessary to either relaunch a calibration or re-apply the calibration factor which was previously saved (refer to *Section 16.4.8: Calibration (ADCAL, ADCALDIF, ADCx_CALFACT)*).

16.4.7 Single-ended and differential input channels

Channels can be configured to be either single-ended input or differential input by writing into bits DIFSEL[15:1] in the ADCx_DIFSEL register. This configuration must be written while the ADC is disabled (ADEN=0). Note that DIFSEL[18:16] are fixed to single ended channels (internal channels only) and are always read as 0.

In single-ended input mode, the analog voltage to be converted for channel “i” is the difference between the external voltage ADC_IN*i* (positive input) and V_{REF-} (negative input).

In differential input mode, the analog voltage to be converted for channel “i” is the difference between the external voltage ADC_IN*i* (positive input) and ADC_IN*i+1* (negative input).

When ADC is configured as differential mode, both input should be biased at (VREF+) / 2 voltage.

The input signal are supposed to be differential (common mode voltage should be fixed).

For a complete description of how the input channels are connected for each ADC, refer to *Figure 40: ADC1 connectivity (devices with 2 ADCs)* to *Figure 42: ADC2 connectivity (devices with 2 ADCs)*.

Caution: When configuring the channel “i” in differential input mode, its negative input voltage is connected to ADC_IN*i+1*. As a consequence, channel “*i+1*” is no longer usable in single-ended mode or in differential mode and must never be configured to be converted. Some channels are shared between ADC1/ADC2: this can make the channel on the other ADC unusable. Only exception is interleaved mode for ADC master and the slave (on devices with 2 ADCs).

Example: Configuring ADC1_IN5 in differential input mode will make ADC12_IN6 not usable: in that case, the channels 6 of both ADC1 and ADC2 must never be converted.

Note: Channels 16, 17 and 18 of ADC1/ADC2 are forced to single-ended configuration (corresponding bits DIFSEL[i] is always zero), either because connected to a single external analog input or connected to an internal channel. The ADC channels connected to internal voltages must be configured in single-ended mode.

16.4.8 Calibration (ADCAL, ADCALDIF, ADCx_CALFACT)

Each ADC provides an automatic calibration procedure which drives all the calibration sequence including the power-on/off sequence of the ADC. During the procedure, the ADC calculates a calibration factor which is 7-bit wide and which is applied internally to the ADC until the next ADC power-off. During the calibration procedure, the application must not use the ADC and must wait until calibration is complete.

Calibration is preliminary to any ADC operation. It removes the offset error which may vary from chip to chip due to process or bandgap variation.

The calibration factor to be applied for single-ended input conversions is different from the factor to be applied for differential input conversions:

- Write ADCALDIF=0 before launching a calibration which will be applied for single-ended input conversions.
- Write ADCALDIF=1 before launching a calibration which will be applied for differential input conversions.

The calibration is then initiated by software by setting bit ADCAL=1. Calibration can only be initiated when the ADC is disabled (when ADEN=0). ADCAL bit stays at 1 during all the calibration sequence. It is then cleared by hardware as soon the calibration completes. At this time, the associated calibration factor is stored internally in the analog ADC and also in the bits CALFACT_S[6:0] or CALFACT_D[6:0] of ADCx_CALFACT register (depending on single-ended or differential input calibration)

The internal analog calibration is kept if the ADC is disabled (ADEN=0). However, if the ADC is disabled for extended periods, then it is recommended that a new calibration cycle is run before re-enabling the ADC.

The internal analog calibration is lost each time the power of the ADC is removed (example, when the product enters in STANDBY or VBAT mode). In this case, to avoid spending time recalibrating the ADC, it is possible to re-write the calibration factor into the ADCx_CALFACT register without recalibrating, supposing that the software has previously saved the calibration factor delivered during the previous calibration.

The calibration factor can be written if the ADC is enabled but not converting (ADEN=1 and ADSTART=0 and JADSTART=0). Then, at the next start of conversion, the calibration factor will automatically be injected into the analog ADC. This loading is transparent and does not add any cycle latency to the start of the conversion. It is recommended to recalibrate when V_{REF+} voltage changed more than 10%.

Software procedure to calibrate the ADC

1. Ensure DEEPPWD=0, ADVREGEN=1 and that ADC voltage regulator startup time has elapsed.
2. Ensure that ADEN=0.
3. Select the input mode for this calibration by setting ADCALDIF=0 (Single-ended input) or ADCALDIF=1 (Differential input).
4. Set ADCAL=1.
5. Wait until ADCAL=0.
6. The calibration factor can be read from ADCx_CALFACT register.

Figure 43. ADC calibration

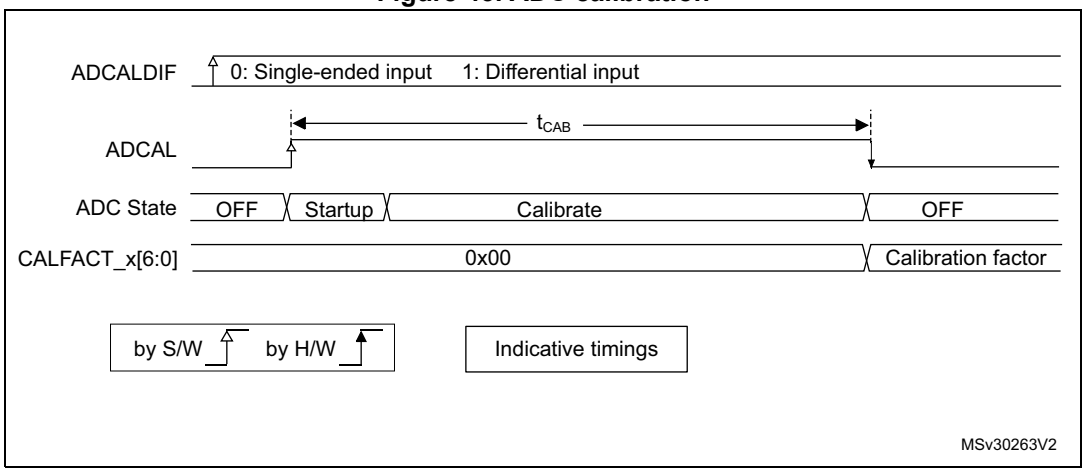

Software procedure to re-inject a calibration factor into the ADC

1. Ensure ADEN=1 and ADSTART=0 and JADSTART=0 (ADC enabled and no conversion is ongoing).
2. Write CALFACT_S and CALFACT_D with the new calibration factors.
3. When a conversion is launched, the calibration factor will be injected into the analog ADC only if the internal analog calibration factor differs from the one stored in bits CALFACT_S for single-ended input channel or bits CALFACT_D for differential input channel.

Figure 44. Updating the ADC calibration factor

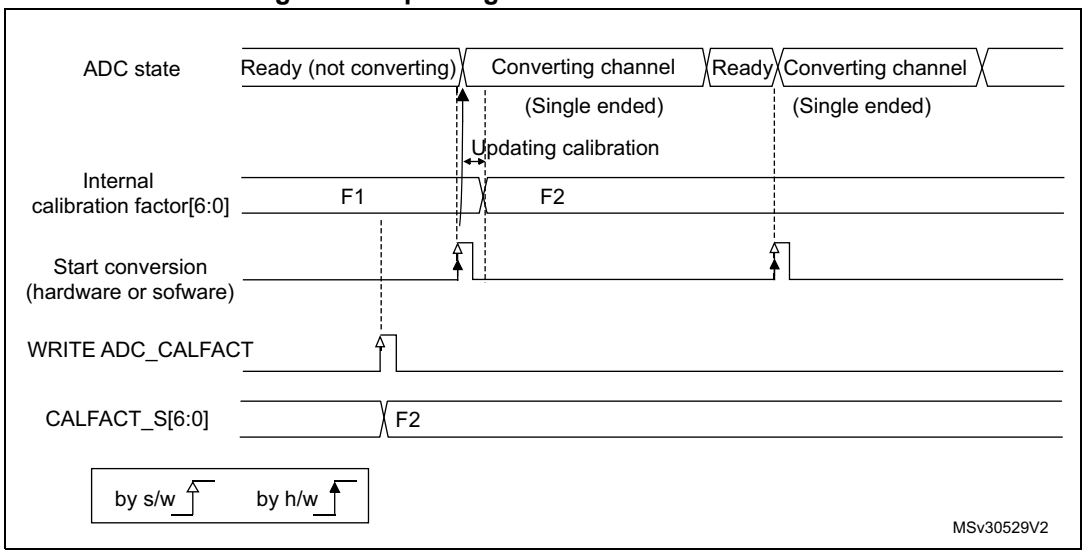

Converting single-ended and differential analog inputs with a single ADC

If the ADC is supposed to convert both differential and single-ended inputs, two calibrations must be performed, one with ADCALDIF=0 and one with ADCALDIF=1. The procedure is the following:

1. Disable the ADC.
2. Calibrate the ADC in single-ended input mode (with ADCALDIF=0). This updates the register CALFACT_S[6:0].
3. Calibrate the ADC in Differential input modes (with ADCALDIF=1). This updates the register CALFACT_D[6:0].
4. Enable the ADC, configure the channels and launch the conversions. Each time there is a switch from a single-ended to a differential inputs channel (and vice-versa), the calibration will automatically be injected into the analog ADC.

Figure 45. Mixing single-ended and differential channels

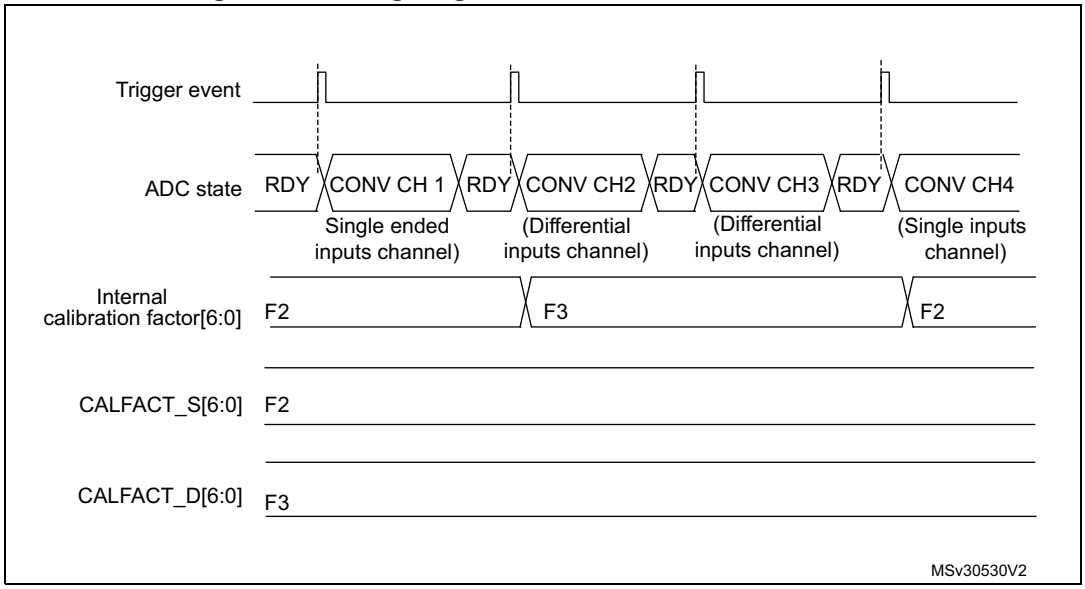

16.4.9 ADC on-off control (ADEN, ADDIS, ADRDY)

First of all, follow the procedure explained in *Section 16.4.6: ADC Deep-Power-Down Mode (DEEPPWD) & ADC Voltage Regulator (ADVREGEN)*).

Once DEEPPWD=0 and ADVREGEN=1, the ADC can be enabled and the ADC needs a stabilization time of t_{STAB} before it starts converting accurately, as shown in *Figure 46*. Two control bits enable or disable the ADC:

- ADEN=1 enables the ADC. The flag ADRDY will be set once the ADC is ready for operation.
- ADDIS=1 disables the ADC. ADEN and ADDIS are then automatically cleared by hardware as soon as the analog ADC is effectively disabled.

Regular conversion can then start either by setting ADSTART=1 (refer to *Section 16.4.18: Conversion on external trigger and trigger polarity (EXTSEL, EXTEN, JEXTSEL, JEXTEN)*) or when an external trigger event occurs, if triggers are enabled.

Injected conversions start by setting JADSTART=1 or when an external injected trigger event occurs, if injected triggers are enabled.

Software procedure to enable the ADC

1. Clear the ADRDY bit in the ADC_ISR register by writing ‘1’.
2. Set ADEN=1.
3. Wait until ADRDY=1 (ADRDY is set after the ADC startup time). This can be done using the associated interrupt (setting ADRDYIE=1).
4. Clear the ADRDY bit in the ADC_ISR register by writing ‘1’ (optional).

Caution: ADEN bit cannot be set during ADCAL=1 and 4 ADC clock cycle after the ADCAL bit is cleared by hardware(end of the calibration).

Software procedure to disable the ADC

1. Check that both ADSTART=0 and JADSTART=0 to ensure that no conversion is ongoing. If required, stop any regular and injected conversion ongoing by setting ADSTP=1 and JADSTP=1 and then wait until ADSTP=0 and JADSTP=0.
2. Set ADDIS=1.
3. If required by the application, wait until ADEN=0, until the analog ADC is effectively disabled (ADDIS will automatically be reset once ADEN=0).

Figure 46. Enabling / Disabling the ADC

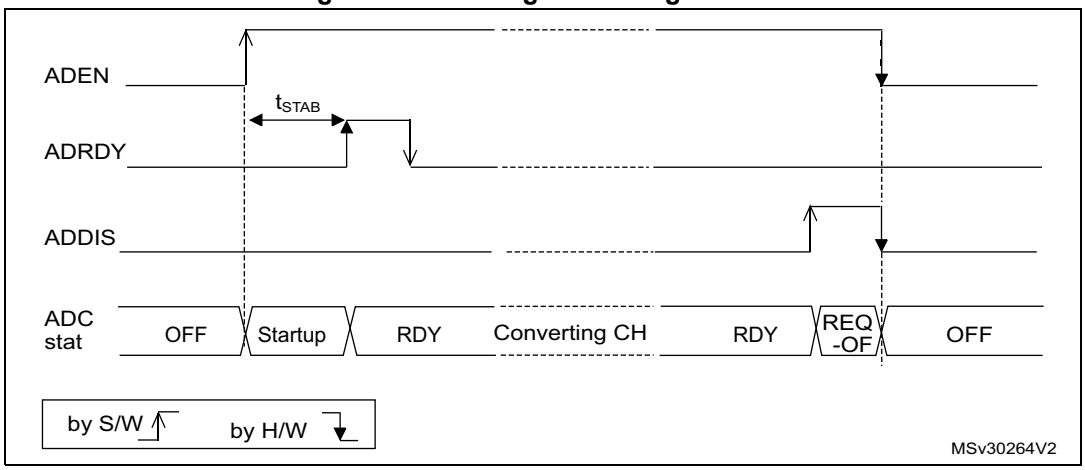

16.4.10 Constraints when writing the ADC control bits

The software is allowed to write the RCC control bits to configure and enable the ADC clock (refer to RCC Section), the control bits DIFSEL in the ADCx_DIFSEL register and the control bits ADCAL and ADEN in the ADCx_CR register, only if the ADC is disabled (ADEN must be equal to 0).

The software is then allowed to write the control bits ADSTART, JADSTART and ADDIS of the ADCx_CR register only if the ADC is enabled and there is no pending request to disable the ADC (ADEN must be equal to 1 and ADDIS to 0).

For all the other control bits of the ADCx_CFGR, ADCx_SMPRx, ADCx_TRx, ADCx_SQRx, ADCx_JDRy, ADCx_OFRy, ADCx_OFCHR and ADCx_IER registers:

- For control bits related to configuration of regular conversions, the software is allowed to write them only if the ADC is enabled (ADEN=1) and if there is no regular conversion ongoing (ADSTART must be equal to 0).
- For control bits related to configuration of injected conversions, the software is allowed to write them only if the ADC is enabled (ADEN=1) and if there is no injected conversion ongoing (JADSTART must be equal to 0).

The software is allowed to write the control bits ADSTP or JADSTP of the ADCx_CR register only if the ADC is enabled and eventually converting and if there is no pending request to disable the ADC (ADSTART or JADSTART must be equal to 1 and ADDIS to 0).

The software can write the register ADCx_JSQR at any time, when the ADC is enabled (ADEN=1).

Note: There is no hardware protection to prevent these forbidden write accesses and ADC behavior may become in an unknown state. To recover from this situation, the ADC must be disabled (clear ADEN=0 as well as all the bits of ADCx_CR register).

16.4.11 Channel selection (SQRx, JSQRx)

There are up to 19 multiplexed channels per ADC:

- 5 fast analog inputs coming from GPIO pads (ADC_IN1..5)
- Up to 10 slow analog inputs coming from GPIO pads (ADC_IN6..15). Depending on the products, not all of them are available on GPIO pads.
- The ADCs are connected to 5 internal analog inputs:
  - the internal reference voltage (V_{REFINT}) is connected to ADC1_IN0.
  - the internal temperature sensor (V_{TS}) is connected to ADC1_IN17.
  - the V_{BAT} monitoring channel ($V_{BAT}/3$) is connected to ADC1_IN18.
  - the DAC1 internal channel is connected to ADC2_IN17 or ADC1_IN17.
  - the DAC2 internal channel is connected to ADC2_IN18 or ADC1_IN18.

Note: To convert one of the internal analog channels, the corresponding analog sources must first be enabled by programming bits VREFEN, CH17_SEL or CH18_SEL in the ADCx_CCR *registers.*

It is possible to organize the conversions in two groups: regular and injected. A group consists of a sequence of conversions that can be done on any channel and in any order. For instance, it is possible to implement the conversion sequence in the following order: ADC_IN3, ADC_IN8, ADC_IN2, ADC_IN2, ADC_IN0, ADC_IN2, ADC_IN2, ADC_IN15.

- A **regular group** is composed of up to 16 conversions. The regular channels and their order in the conversion sequence must be selected in the ADCx_SQR registers. The total number of conversions in the regular group must be written in the L[3:0] bits in the ADCx_SQR1 register.
- An **injected group** is composed of up to 4 conversions. The injected channels and their order in the conversion sequence must be selected in the ADCx_JSQR register. The total number of conversions in the injected group must be written in the L[1:0] bits in the ADCx_JSQR register.

ADCx_SQR registers must not be modified while regular conversions can occur. For this, the ADC regular conversions must be first stopped by writing ADSTP=1 (refer to *Section 16.4.17: Stopping an ongoing conversion (ADSTP, JADSTP)*).

It is possible to modify the ADCx_JSQR registers on-the-fly while injected conversions are occurring. Refer to *Section 16.4.21: Queue of context for injected conversions*

16.4.12 Channel-wise programmable sampling time (SMPR1, SMPR2)

Before starting a conversion, the ADC must establish a direct connection between the voltage source under measurement and the embedded sampling capacitor of the ADC. This sampling time must be enough for the input voltage source to charge the embedded capacitor to the input voltage level.

Each channel can be sampled with a different sampling time which is programmable using the SMP[2:0] bits in the ADCx_SMPR1 and ADCx_SMPR2 registers. It is therefore possible to select among the following sampling time values:

- SMP = 000: 2.5 ADC clock cycles
- SMP = 001: 6.5 ADC clock cycles
- SMP = 010: 12.5 ADC clock cycles
- SMP = 011: 24.5 ADC clock cycles
- SMP = 100: 47.5 ADC clock cycles
- SMP = 101: 92.5 ADC clock cycles
- SMP = 110: 247.5 ADC clock cycles
- SMP = 111: 640.5 ADC clock cycles

The total conversion time is calculated as follows:

T_{CONV} = Sampling time + 12.5 ADC clock cycles

Example:

With F_{ADC_CLK} = 80 MHz and a sampling time of 2.5 ADC clock cycles:

T_{CONV} = (2.5 + 12.5) ADC clock cycles = 15 ADC clock cycles = 187.5 ns (for fast channels)

The ADC notifies the end of the sampling phase by setting the status bit EOSMP (only for regular conversion).

Constraints on the sampling time for fast and slow channels

For each channel, SMP[2:0] bits must be programmed to respect a minimum sampling time as specified in the ADC characteristics section of the datasheets.

I/O analog switches voltage booster

The I/O analog switches resistance increases when the V_{DDA} voltage is too low. This requires to have the sampling time adapted accordingly (cf datasheet for electrical characteristics). This resistance can be minimized at low V_{DDA} by enabling an internal voltage booster with BOOSTEN bit in the SYSCFG_CFGR1 register.

16.4.13 Single conversion mode (CONT=0)

In Single conversion mode, the ADC performs once all the conversions of the channels. This mode is started with the CONT bit at 0 by either:

- Setting the ADSTART bit in the ADCx_CR register (for a regular channel)
- Setting the JADSTART bit in the ADCx_CR register (for an injected channel)
- External hardware trigger event (for a regular or injected channel)

Inside the regular sequence, after each conversion is complete:

- The converted data are stored into the 16-bit ADCx_DR register
- The EOC (end of regular conversion) flag is set
- An interrupt is generated if the EOCIE bit is set

Inside the injected sequence, after each conversion is complete:

- The converted data are stored into one of the four 16-bit ADCx_JDRy registers
- The JEOC (end of injected conversion) flag is set
- An interrupt is generated if the JEOCIE bit is set

After the regular sequence is complete:

- The EOS (end of regular sequence) flag is set
- An interrupt is generated if the EOSIE bit is set

After the injected sequence is complete:

- The JEOS (end of injected sequence) flag is set
- An interrupt is generated if the JEOSIE bit is set

Then the ADC stops until a new external regular or injected trigger occurs or until bit ADSTART or JADSTART is set again.

Note: To convert a single channel, program a sequence with a length of 1.

16.4.14 Continuous conversion mode (CONT=1)

This mode applies to regular channels only.

In continuous conversion mode, when a software or hardware regular trigger event occurs, the ADC performs once all the regular conversions of the channels and then automatically re-starts and continuously converts each conversions of the sequence. This mode is started with the CONT bit at 1 either by external trigger or by setting the ADSTART bit in the ADCx_CR register.

Inside the regular sequence, after each conversion is complete:

- The converted data are stored into the 16-bit ADCx_DR register
- The EOC (end of conversion) flag is set
- An interrupt is generated if the EOCIE bit is set

After the sequence of conversions is complete:

- The EOS (end of sequence) flag is set
- An interrupt is generated if the EOSIE bit is set

Then, a new sequence restarts immediately and the ADC continuously repeats the conversion sequence.

Note: To convert a single channel, program a sequence with a length of 1.

It is not possible to have both discontinuous mode and continuous mode enabled: it is forbidden to set both DISCEN=1 and CONT=1.

Injected channels cannot be converted continuously. The only exception is when an injected channel is configured to be converted automatically after regular channels in continuous mode (using JAUTO bit), refer to Auto-injection mode section).

16.4.15 Starting conversions (ADSTART, JADSTART)

Software starts ADC regular conversions by setting ADSTART=1.

When ADSTART is set, the conversion starts:

- Immediately: if EXTEN = 0x0 (software trigger)
- At the next active edge of the selected regular hardware trigger: if EXTEN /= 0x0

Software starts ADC injected conversions by setting JADSTART=1.

When JADSTART is set, the conversion starts:

- Immediately, if JEXTEN = 0x0 (software trigger)
- At the next active edge of the selected injected hardware trigger: if JEXTEN /= 0x0

Note: In auto-injection mode (JAUTO=1), use ADSTART bit to start the regular conversions followed by the auto-injected conversions (JADSTART must be kept cleared).

ADSTART and JADSTART also provide information on whether any ADC operation is currently ongoing. It is possible to re-configure the ADC while ADSTART=0 and JADSTART=0 are both true, indicating that the ADC is idle.

ADSTART is cleared by hardware:

- In single mode with software regular trigger (CONT=0, EXTSEL=0x0)
  - at any end of regular conversion sequence (EOS assertion) or at any end of sub-group processing if DISCEN = 1
- In all cases (CONT=x, EXTSEL=x)
  - after execution of the ADSTP procedure asserted by the software.

Note: In continuous mode (CONT=1), ADSTART is not cleared by hardware with the assertion of EOS because the sequence is automatically relaunched.

When a hardware trigger is selected in single mode (CONT=0 and EXTSEL /=0x00), ADSTART is not cleared by hardware with the assertion of EOS to help the software which does not need to reset ADSTART again for the next hardware trigger event. This ensures that no further hardware triggers are missed.

JADSTART is cleared by hardware:

- in single mode with software injected trigger (JEXTSEL=0x0)
  - at any end of injected conversion sequence (JEOS assertion) or at any end of sub-group processing if JDISCEN = 1
- in all cases (JEXTSEL=x)
  - after execution of the JADSTP procedure asserted by the software.

16.4.16 Timing

The elapsed time between the start of a conversion and the end of conversion is the sum of the configured sampling time plus the successive approximation time depending on data resolution:

$$T_{CONV} = T_{SMPL} + T_{SAR} = [\ 2.5\ _{|min} + 12.5\ _{|12bit}\ ] \times T_{ADC_CLK}$$

$$T_{CONV} = T_{SMPL} + T_{SAR} = 31.25\ ns\ _{|min} + 156.25\ ns\ _{|12bit} = 187.5\ ns\ (for\ F_{ADC_CLK} = 80\ MHz)$$

Figure 47. Analog to digital conversion time

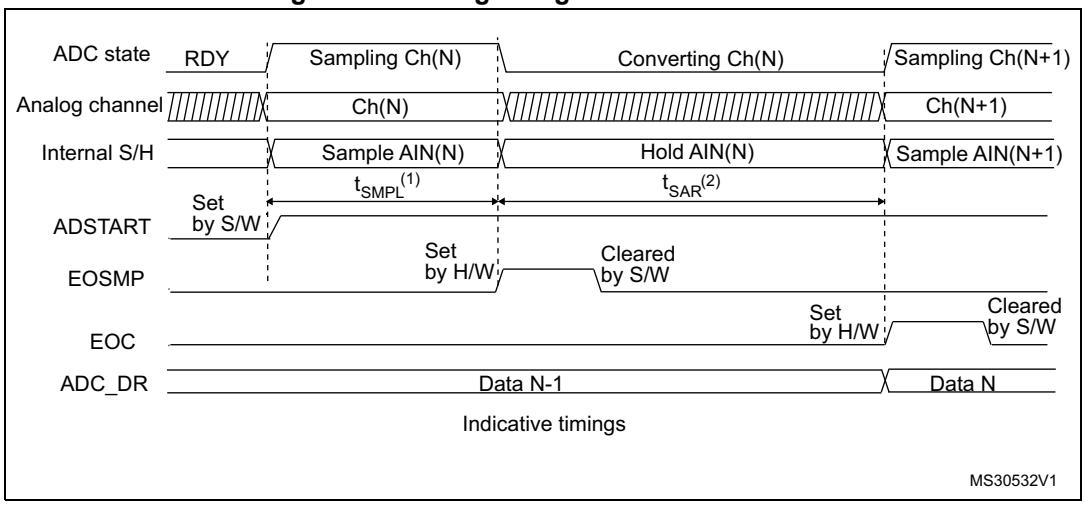

1. T_{SMPL} depends on SMP[2:0]
2. T_{SAR} depends on RES[2:0]

16.4.17 Stopping an ongoing conversion (ADSTP, JADSTP)

The software can decide to stop regular conversions ongoing by setting ADSTP=1 and injected conversions ongoing by setting JADSTP=1.

Stopping conversions will reset the ongoing ADC operation. Then the ADC can be reconfigured (ex: changing the channel selection or the trigger) ready for a new operation.

Note that it is possible to stop injected conversions while regular conversions are still operating and vice-versa. This allows, for instance, re-configuration of the injected conversion sequence and triggers while regular conversions are still operating (and vice-versa).

When the ADSTP bit is set by software, any ongoing regular conversion is aborted with partial result discarded (ADCx_DR register is not updated with the current conversion).

When the JADSTP bit is set by software, any ongoing injected conversion is aborted with partial result discarded (ADCx_JDRy register is not updated with the current conversion). The scan sequence is also aborted and reset (meaning that relaunching the ADC would re-start a new sequence).

Once this procedure is complete, bits ADSTP/ADSTART (in case of regular conversion), or JADSTP/JADSTART (in case of injected conversion) are cleared by hardware and the software must poll ADSTART (or JADSTART) until the bit is reset before assuming the ADC is completely stopped.

Note: In auto-injection mode (JAUTO=1), setting ADSTP bit aborts both regular and injected conversions (JADSTP must not be used).

Figure 48. Stopping ongoing regular conversions

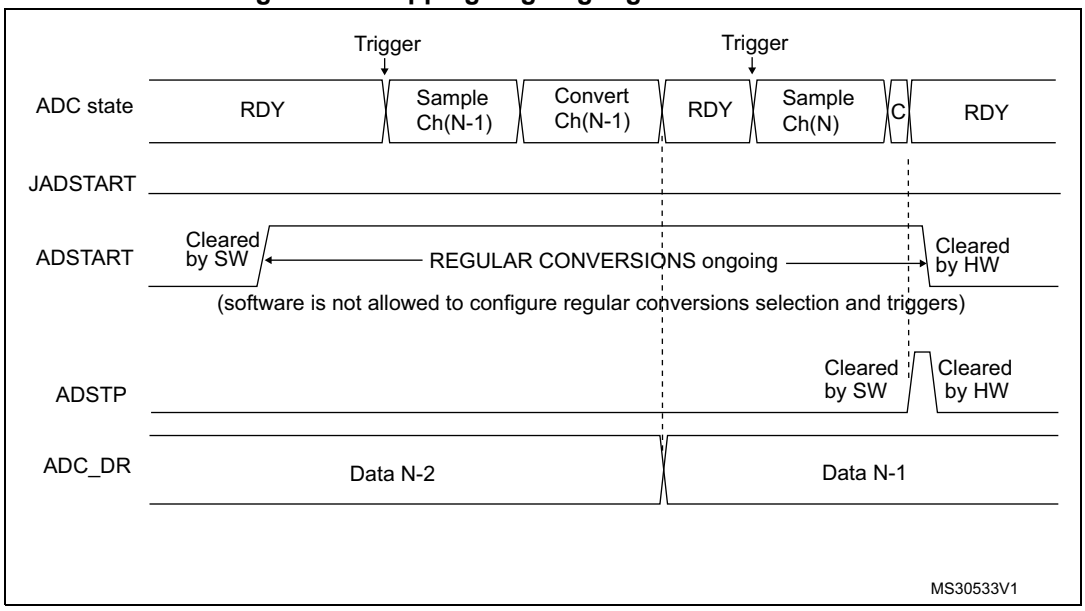

Figure 49. Stopping ongoing regular and injected conversions

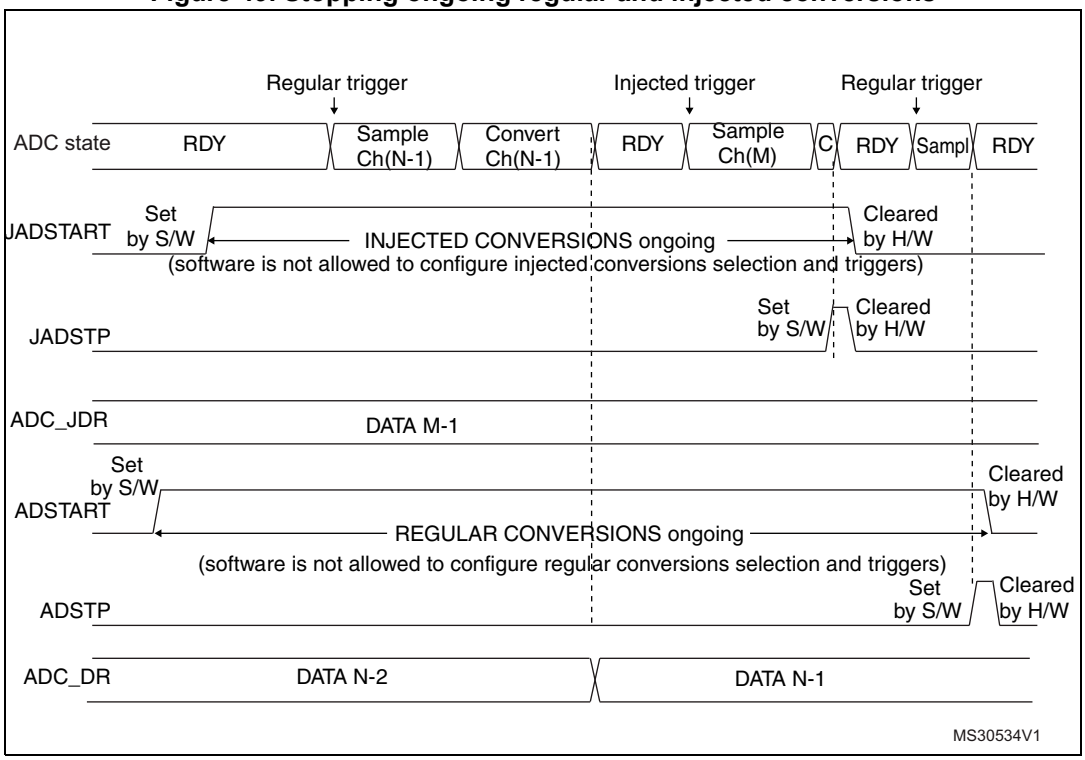

16.4.18 Conversion on external trigger and trigger polarity (EXTSEL, EXTEN, JEXTSEL, JEXTEN)

A conversion or a sequence of conversions can be triggered either by software or by an external event (e.g. timer capture, input pins). If the EXTEN[1:0] control bits (for a regular conversion) or JEXTEN[1:0] bits (for an injected conversion) are different from 0b00, then external events are able to trigger a conversion with the selected polarity.

When the Injected Queue is enabled (bit JQDIS=0), injected software triggers are not possible.

The regular trigger selection is effective once software has set bit ADSTART=1 and the injected trigger selection is effective once software has set bit JADSTART=1.

Any hardware triggers which occur while a conversion is ongoing are ignored.

- If bit ADSTART=0, any regular hardware triggers which occur are ignored.
- If bit JADSTART=0, any injected hardware triggers which occur are ignored.

Table 55 provides the correspondence between the EXTEN[1:0] and JEXTEN[1:0] values and the trigger polarity.

Table 55. Configuring the trigger polarity for regular external triggers

EXTEN[1:0]	Source
00	Hardware Trigger detection disabled, software trigger detection enabled
01	Hardware Trigger with detection on the rising edge
10	Hardware Trigger with detection on the falling edge
11	Hardware Trigger with detection on both the rising and falling edges

Note: The polarity of the regular trigger cannot be changed on-the-fly.

Table 56. Configuring the trigger polarity for injected external triggers

JEXTEN[1:0]	Source
00	– If JQDIS=1 (Queue disabled): Hardware trigger detection disabled, software trigger detection enabled – If JQDIS=0 (Queue enabled), Hardware and software trigger detection disabled
01	Hardware Trigger with detection on the rising edge
10	Hardware Trigger with detection on the falling edge
11	Hardware Trigger with detection on both the rising and falling edges

Note: The polarity of the injected trigger can be anticipated and changed on-the-fly when the queue is enabled (JQDIS=0). Refer to Section 16.4.21: Queue of context for injected conversions.

The EXTSEL[3:0] and JEXTSEL[3:0] control bits select which out of 16 possible events can trigger conversion for the regular and injected groups.

A regular group conversion can be interrupted by an injected trigger.

Note: The regular trigger selection cannot be changed on-the-fly.
The injected trigger selection can be anticipated and changed on-the-fly. Refer to Section 16.4.21: Queue of context for injected conversions on page 385

Each ADC master shares the same input triggers with its ADC slave as described in *Figure 50*.

Figure 50. Triggers are shared between ADC master and ADC slave (devices with 2 ADCs)

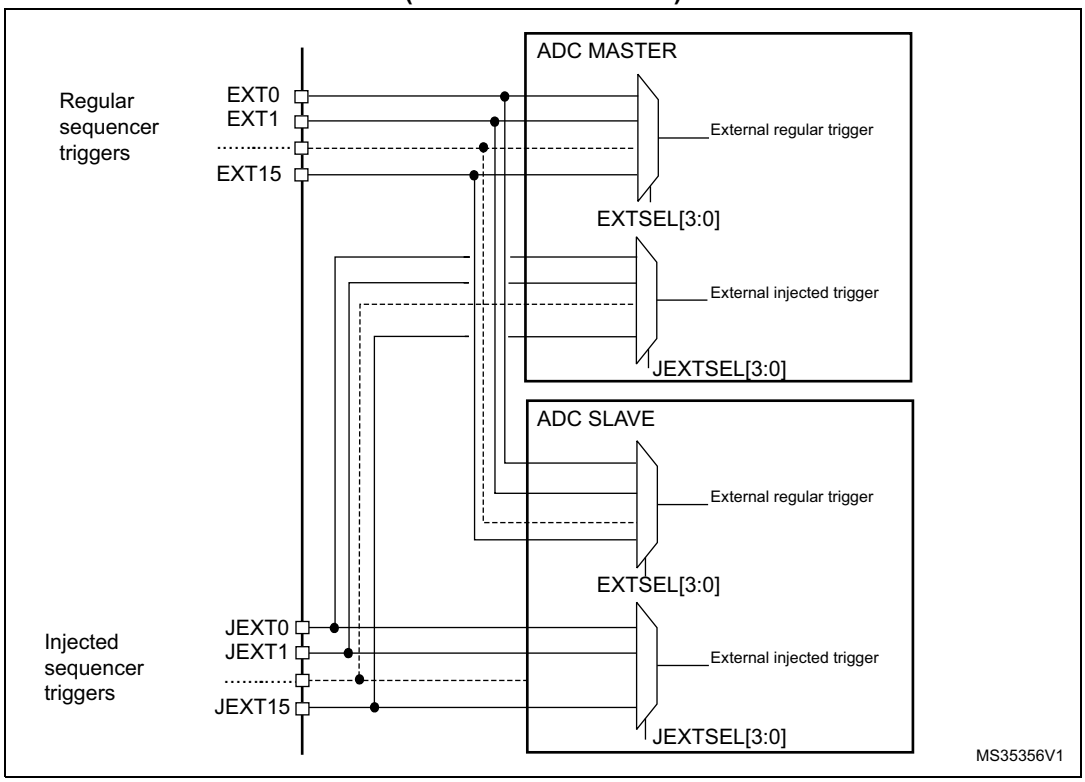

Table 57 to *Table 60* give all the possible external triggers of the three ADCs for regular and injected conversion.

Table 57. ADC1, ADC2 - External triggers for regular channels (devices with 2 ADCs)

Name	Source	Type	EXTSEL[3:0]
EXT0	TIM1_CC1 event	Internal signal from on-chip timers	0000
EXT1	TIM1_CC2 event	Internal signal from on-chip timers	0001
EXT2	TIM1_CC3 event	Internal signal from on-chip timers	0010
EXT3	TIM2_CC2 event	Internal signal from on-chip timers	0011
EXT4	TIM3_TRGO event	Internal signal from on-chip timers	0100
EXT5	TIM4_CC4 event	Internal signal from on-chip timers	0101
EXT6	EXTI line 11	External pin	0110
EXT7	TIM8_TRGO event	Internal signal from on-chip timers	0111
EXT8	TIM8_TRGO2 event	Internal signal from on-chip timers	1000

Table 57. ADC1, ADC2 - External triggers for regular channels (devices with 2 ADCs) (continued)

Name	Source	Type	EXTSEL[3:0]
EXT9	TIM1_TRGO event	Internal signal from on-chip timers	1001
EXT10	TIM1_TRGO2 event	Internal signal from on-chip timers	1010
EXT11	TIM2_TRGO event	Internal signal from on-chip timers	1011
EXT12	TIM4_TRGO event	Internal signal from on-chip timers	1100
EXT13	TIM6_TRGO event	Internal signal from on-chip timers	1101
EXT14	TIM15_TRGO event	Internal signal from on-chip timers	1110
EXT15	TIM3_CC4 event	Internal signal from on-chip timers	1111

Table 58. ADC1 - External triggers for regular channels (devices with single ADC)

Name	Source	Type	EXTSEL[3:0]
EXT0	TIM1_CC1 event	Internal signal from on-chip timers	0000
EXT1	TIM1_CC2 event	Internal signal from on-chip timers	0001
EXT2	TIM1_CC3 event	Internal signal from on-chip timers	0010
EXT3	TIM2_CC2 event	Internal signal from on-chip timers	0011
EXT6	EXTI line 11	External pin	0110
EXT9	TIM1_TRGO event	Internal signal from on-chip timers	1001
EXT10	TIM1_TRGO2 event	Internal signal from on-chip timers	1010
EXT11	TIM2_TRGO event	Internal signal from on-chip timers	1011
EXT13	TIM6_TRGO event	Internal signal from on-chip timers	1101
EXT14	TIM15_TRGO event	Internal signal from on-chip timers	1110

Table 59. ADC1, ADC2 - External trigger for injected channels (devices with 2 ADCs)

Name	Source	Type	JEXTSEL[3..0]
JEXT0	TIM1_TRGO event	Internal signal from on-chip timers	0000
JEXT1	TIM1_CC4 event	Internal signal from on-chip timers	0001
JEXT2	TIM2_TRGO event	Internal signal from on-chip timers	0010
JEXT3	TIM2_CC1 event	Internal signal from on-chip timers	0011
JEXT4	TIM3_CC4 event	Internal signal from on-chip timers	0100
JEXT5	TIM4_TRGO event	Internal signal from on-chip timers	0101
JEXT6	EXTI line 15	External pin	0110
JEXT7	TIM8_CC4 event	Internal signal from on-chip timers	0111
JEXT8	TIM1_TRGO2 event	Internal signal from on-chip timers	1000
JEXT9	TIM8_TRGO event	Internal signal from on-chip timers	1001

Table 59. ADC1, ADC2 - External trigger for injected channels (devices with 2 ADCs) (continued)

Name	Source	Type	JEXTSEL[3..0]
JEXT10	TIM8_TRGO2 event	Internal signal from on-chip timers	1010
JEXT11	TIM3_CC3 event	Internal signal from on-chip timers	1011
JEXT12	TIM3_TRGO event	Internal signal from on-chip timers	1100
JEXT13	TIM3_CC1 event	Internal signal from on-chip timers	1101
JEXT14	TIM6_TRGO event	Internal signal from on-chip timers	1110
JEXT15	TIM15_TRGO event	Internal signal from on-chip timers	1111

Table 60. ADC1 - External trigger for injected channels (devices with single ADC)

Name	Source	Type	JEXTSEL[3..0]
JEXT0	TIM1_TRGO event	Internal signal from on-chip timers	0000
JEXT1	TIM1_CC4 event	Internal signal from on-chip timers	0001
JEXT2	TIM2_TRGO event	Internal signal from on-chip timers	0010
JEXT3	TIM2_CC1 event	Internal signal from on-chip timers	0011
JEXT6	EXTI line 15	External pin	0110
JEXT8	TIM1_TRGO2 event	Internal signal from on-chip timers	1000
JEXT14	TIM6_TRGO event	Internal signal from on-chip timers	1110
JEXT15	TIM15_TRGO event	Internal signal from on-chip timers	1111

16.4.19 Injected channel management

Triggered injection mode

To use triggered injection, the JAUTO bit in the ADCx_CFGR register must be cleared.

1. Start the conversion of a group of regular channels either by an external trigger or by setting the ADSTART bit in the ADCx_CR register.
2. If an external injected trigger occurs, or if the JADSTART bit in the ADCx_CR register is set during the conversion of a regular group of channels, the current conversion is reset and the injected channel sequence switches are launched (all the injected channels are converted once).
3. Then, the regular conversion of the regular group of channels is resumed from the last interrupted regular conversion.
4. If a regular event occurs during an injected conversion, the injected conversion is not interrupted but the regular sequence is executed at the end of the injected sequence. *Figure 51* shows the corresponding timing diagram.

Note: When using triggered injection, one must ensure that the interval between trigger events is longer than the injection sequence. For instance, if the sequence length is 28 ADC clock cycles (that is two conversions with a sampling time of 1.5 clock periods), the minimum interval between triggers must be 29 ADC clock cycles.

Auto-injection mode

If the JAUTO bit in the ADCx_CFGR register is set, then the channels in the injected group are automatically converted after the regular group of channels. This can be used to convert a sequence of up to 20 conversions programmed in the ADCx_SQR and ADCx_JSQR registers.

In this mode, the ADSTART bit in the ADCx_CR register must be set to start regular conversions, followed by injected conversions (JADSTART must be kept cleared). Setting the ADSTP bit aborts both regular and injected conversions (JADSTP bit must not be used).

In this mode, external trigger on injected channels must be disabled.

If the CONT bit is also set in addition to the JAUTO bit, regular channels followed by injected channels are continuously converted.

Note: It is not possible to use both the auto-injected and discontinuous modes simultaneously.

When the DMA is used for exporting regular sequencer's data in JAUTO mode, it is necessary to program it in circular mode (CIRC bit set in DMA_CCRx register). If the CIRC bit is reset (single-shot mode), the JAUTO sequence will be stopped upon DMA Transfer Complete event.

Figure 51. Injected conversion latency

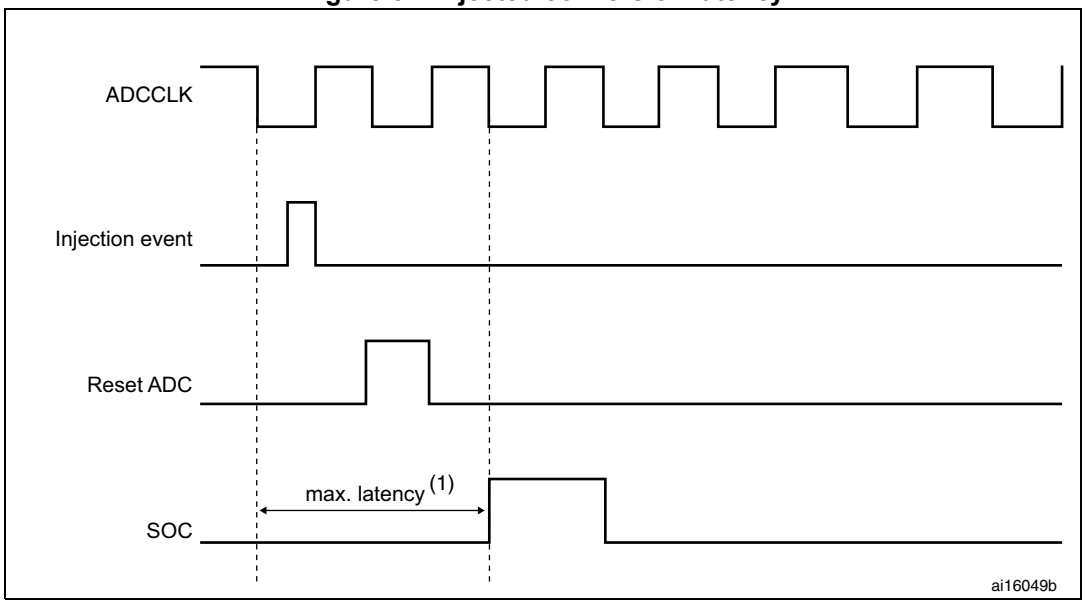

1. The maximum latency value can be found in the electrical characteristics of the STM32L431/433/443 datasheet.

16.4.20 Discontinuous mode (DISCEN, DISCNUM, JDISCEN)

Regular group mode

This mode is enabled by setting the DISCEN bit in the ADCx_CFGR register.

It is used to convert a short sequence (sub-group) of n conversions (n ≤ 8) that is part of the sequence of conversions selected in the ADCx_SQR registers. The value of n is specified by writing to the DISCNUM[2:0] bits in the ADCx_CFGR register.

When an external trigger occurs, it starts the next n conversions selected in the ADCx_SQR registers until all the conversions in the sequence are done. The total sequence length is defined by the L[3:0] bits in the ADCx_SQR1 register.

Example:

- DISCEN=1, n=3, channels to be converted = 1, 2, 3, 6, 7, 8, 9, 10, 11
  - 1st trigger: channels converted are 1, 2, 3 (an EOC event is generated at each conversion).
  - 2nd trigger: channels converted are 6, 7, 8 (an EOC event is generated at each conversion).
  - 3rd trigger: channels converted are 9, 10, 11 (an EOC event is generated at each conversion) and an EOS event is generated after the conversion of channel 11.
  - 4th trigger: channels converted are 1, 2, 3 (an EOC event is generated at each conversion).
  - ...
- DISCEN=0, channels to be converted = 1, 2, 3, 6, 7, 8, 9, 10,11
  - 1st trigger: the complete sequence is converted: channel 1, then 2, 3, 6, 7, 8, 9, 10 and 11. Each conversion generates an EOC event and the last one also generates an EOS event.
  - all the next trigger events will relaunch the complete sequence.

Note: When a regular group is converted in discontinuous mode, no rollover occurs (the last subgroup of the sequence can have less than n conversions).

When all subgroups are converted, the next trigger starts the conversion of the first subgroup. In the example above, the 4th trigger reconverts the channels 1, 2 and 3 in the 1st subgroup.

It is not possible to have both discontinuous mode and continuous mode enabled. In this case (if DISCEN=1, CONT=1), the ADC behaves as if continuous mode was disabled.

Injected group mode

This mode is enabled by setting the JDISCEN bit in the ADCx_CFGR register. It converts the sequence selected in the ADCx_JSQR register, channel by channel, after an external injected trigger event. This is equivalent to discontinuous mode for regular channels where ‘n’ is fixed to 1.

When an external trigger occurs, it starts the next channel conversions selected in the ADCx_JSQR registers until all the conversions in the sequence are done. The total sequence length is defined by the JL[1:0] bits in the ADCx_JSQR register.

Example:

- JDISCEN=1, channels to be converted = 1, 2, 3
  - 1st trigger: channel 1 converted (a JEOC event is generated)
  - 2nd trigger: channel 2 converted (a JEOC event is generated)
  - 3rd trigger: channel 3 converted and a JEOC event + a JEOS event are generated
  - ...

Note: When all injected channels have been converted, the next trigger starts the conversion of the first injected channel. In the example above, the 4th trigger reconverts the 1st injected channel 1.

It is not possible to use both auto-injected mode and discontinuous mode simultaneously: the bits DISCEN and JDISCEN must be kept cleared by software when JAUTO is set.

16.4.21 Queue of context for injected conversions

A queue of context is implemented to anticipate up to 2 contexts for the next injected sequence of conversions. JQDIS bit of ADCx_CFGR register must be reset to enable this feature. Only hardware-triggered conversions are possible when the context queue is enabled.

This context consists of:

- Configuration of the injected triggers (bits JEXTEN[1:0] and JEXTSEL[3:0] in ADCx_JSQR register)
- Definition of the injected sequence (bits JSQx[4:0] and JL[1:0] in ADCx_JSQR register)

All the parameters of the context are defined into a single register ADCx_JSQR and this register implements a queue of 2 buffers, allowing the bufferization of up to 2 sets of parameters:

- The JSQR register can be written at any moment even when injected conversions are ongoing.
- Each data written into the JSQR register is stored into the Queue of context.
- At the beginning, the Queue is empty and the first write access into the JSQR register immediately changes the context and the ADC is ready to receive injected triggers.
- Once an injected sequence is complete, the Queue is consumed and the context changes according to the next JSQR parameters stored in the Queue. This new context is applied for the next injected sequence of conversions.
- A Queue overflow occurs when writing into register JSQR while the Queue is full. This overflow is signaled by the assertion of the flag JQOVF. When an overflow occurs, the write access of JSQR register which has created the overflow is ignored and the queue of context is unchanged. An interrupt can be generated if bit JQOVFIE is set.
- Two possible behaviors are possible when the Queue becomes empty, depending on the value of the control bit JQM of register ADCx_CFGR:
  - If JQM=0, the Queue is empty just after enabling the ADC, but then it can never be empty during run operations: the Queue always maintains the last active context and any further valid start of injected sequence will be served according to the last active context.
  - If JQM=1, the Queue can be empty after the end of an injected sequence or if the Queue is flushed. When this occurs, there is no more context in the queue and

hardware triggers are disabled. Therefore, any further hardware injected triggers are ignored until the software re-writes a new injected context into JSQR register.

- Reading JSQR register returns the current JSQR context which is active at that moment. When the JSQR context is empty, JSQR is read as 0x0000.
- The Queue is flushed when stopping injected conversions by setting JADSTP=1 or when disabling the ADC by setting ADDIS=1:
  - If JQM=0, the Queue is maintained with the last active context.
  - If JQM=1, the Queue becomes empty and triggers are ignored.

Note: When configured in discontinuous mode (bit JDISCEN=1), only the last trigger of the injected sequence changes the context and consumes the Queue.The 1st trigger only consumes the queue but others are still valid triggers as shown by the discontinuous mode example below (length = 3 for both contexts):

- *1st trigger, discontinuous. Sequence 1: context 1 consumed, 1st conversion carried out*
- *2nd trigger, disc. Sequence 1: 2nd conversion.*
- *3rd trigger, discontinuous. Sequence 1: 3rd conversion.*
- *4th trigger, discontinuous. Sequence 2: context 2 consumed, 1st conversion carried out.*
- *5th trigger, discontinuous. Sequence 2: 2nd conversion.*
- *6th trigger, discontinuous. Sequence 2: 3rd conversion.*

Behavior when changing the trigger or sequence context

The *Figure 52* and *Figure 53* show the behavior of the context Queue when changing the sequence or the triggers.

Figure 52. Example of JSQR queue of context (sequence change)

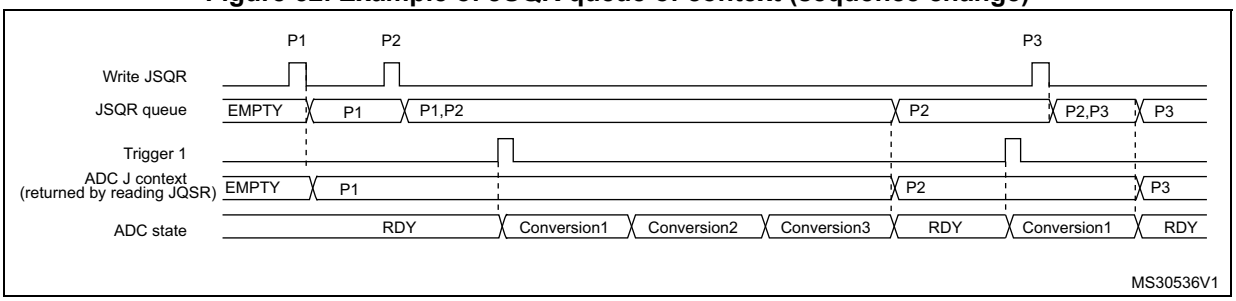

1. Parameters:
   P1: sequence of 3 conversions, hardware trigger 1
   P2: sequence of 1 conversion, hardware trigger 1
   P3: sequence of 4 conversions, hardware trigger 1

Figure 53. Example of JSQR queue of context (trigger change)

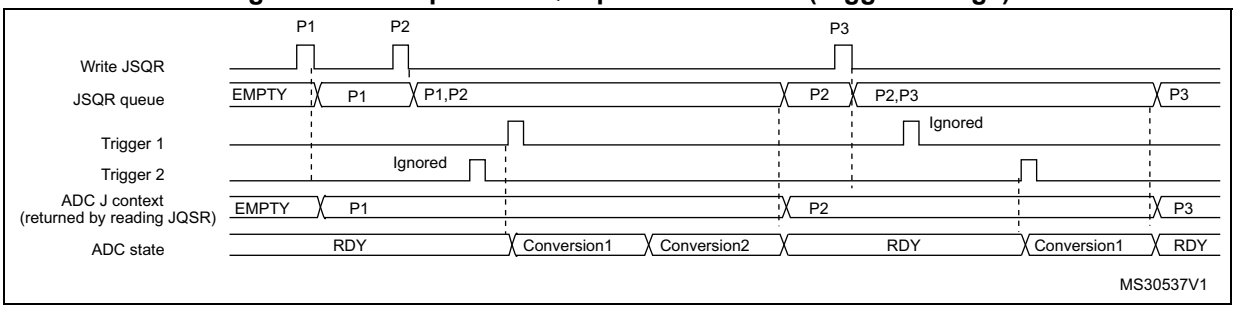

1. Parameters:

P1: sequence of 2 conversions, hardware trigger 1
P2: sequence of 1 conversion, hardware trigger 2
P3: sequence of 4 conversions, hardware trigger 1

Queue of context: Behavior when a queue overflow occurs

The *Figure 54* and *Figure 55* show the behavior of the context Queue if an overflow occurs before or during a conversion.

Figure 54. Example of JSQR queue of context with overflow before conversion

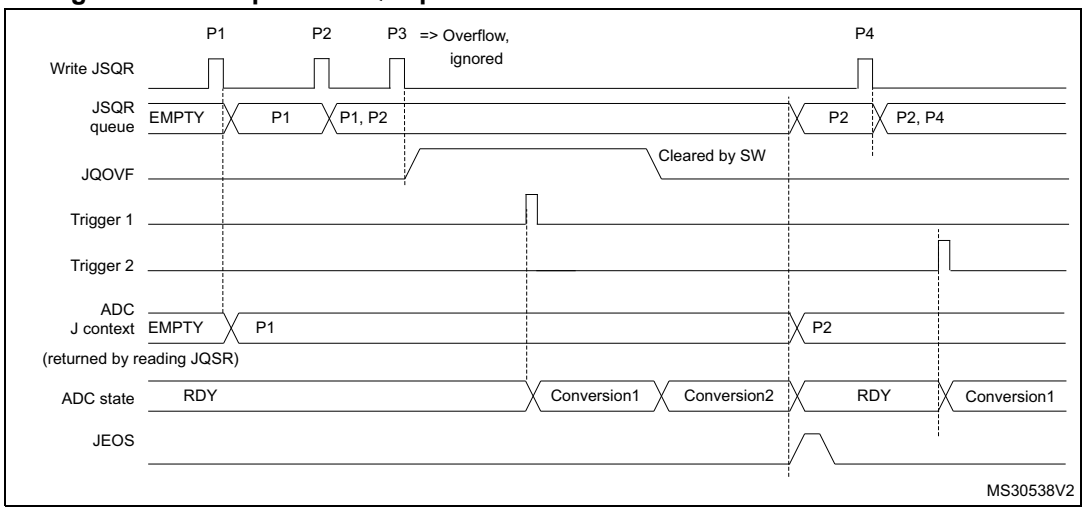

1. Parameters:
   P1: sequence of 2 conversions, hardware trigger 1
   P2: sequence of 1 conversion, hardware trigger 2
   P3: sequence of 3 conversions, hardware trigger 1
   P4: sequence of 4 conversions, hardware trigger 1

Figure 55. Example of JSQR queue of context with overflow during conversion

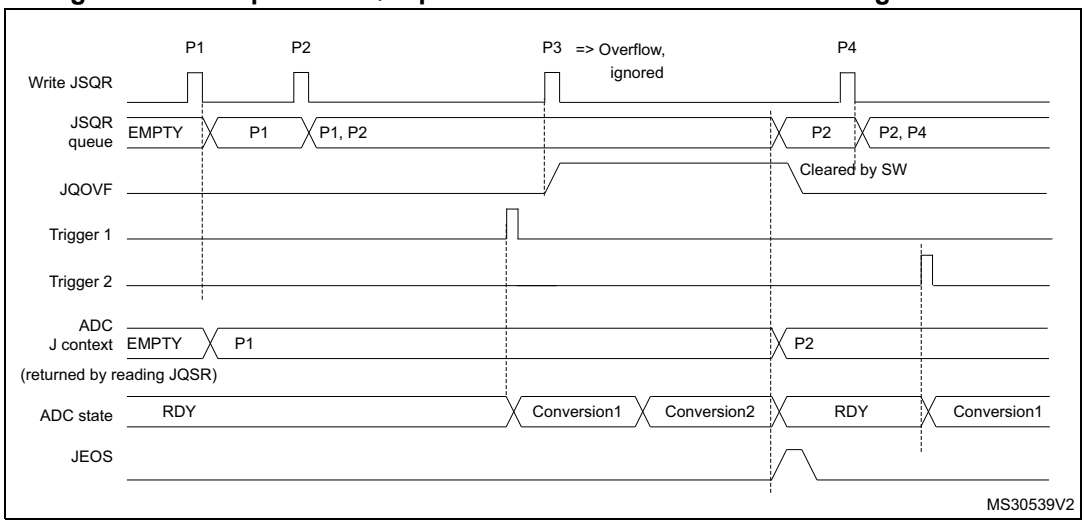

1. Parameters:
   P1: sequence of 2 conversions, hardware trigger 1
   P2: sequence of 1 conversion, hardware trigger 2
   P3: sequence of 3 conversions, hardware trigger 1
   P4: sequence of 4 conversions, hardware trigger 1

It is recommended to manage the queue overflows as described below:

- After each P context write into JSQR register, flag JQOVF shows if the write has been ignored or not (an interrupt can be generated).
- Avoid Queue overflows by writing the third context (P3) only once the flag JEOS of the previous context P2 has been set. This ensures that the previous context has been consumed and that the queue is not full.

Queue of context: Behavior when the queue becomes empty

Figure 56 and *Figure 57* show the behavior of the context Queue when the Queue becomes empty in both cases JQM=0 or 1.

Figure 56. Example of JSQR queue of context with empty queue (case JQM=0)

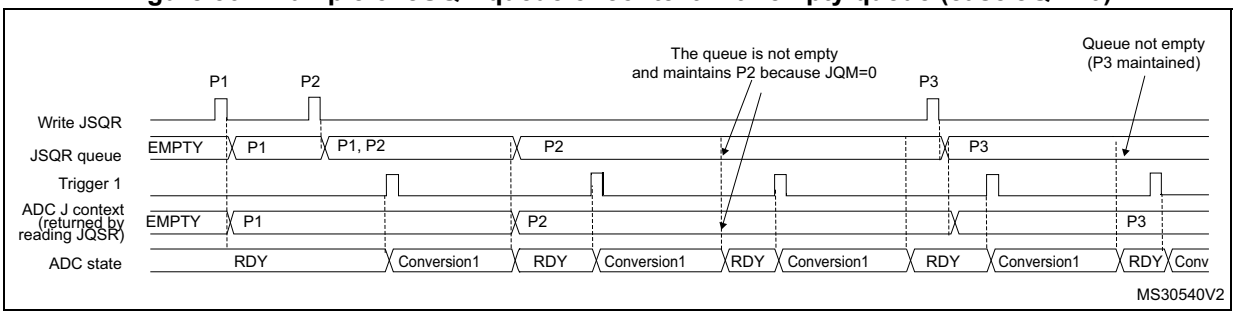

1. Parameters:
   P1: sequence of 1 conversion, hardware trigger 1
   P2: sequence of 1 conversion, hardware trigger 1
   P3: sequence of 1 conversion, hardware trigger 1

Note: When writing P3, the context changes immediately. However, because of internal resynchronization, there is a latency and if a trigger occurs just after or before writing P3, it can happen that the conversion is launched considering the context P2. To avoid this situation, the user must ensure that there is no ADC trigger happening when writing a new context that applies immediately.

Figure 57. Example of JSQR queue of context with empty queue (case JQM=1)

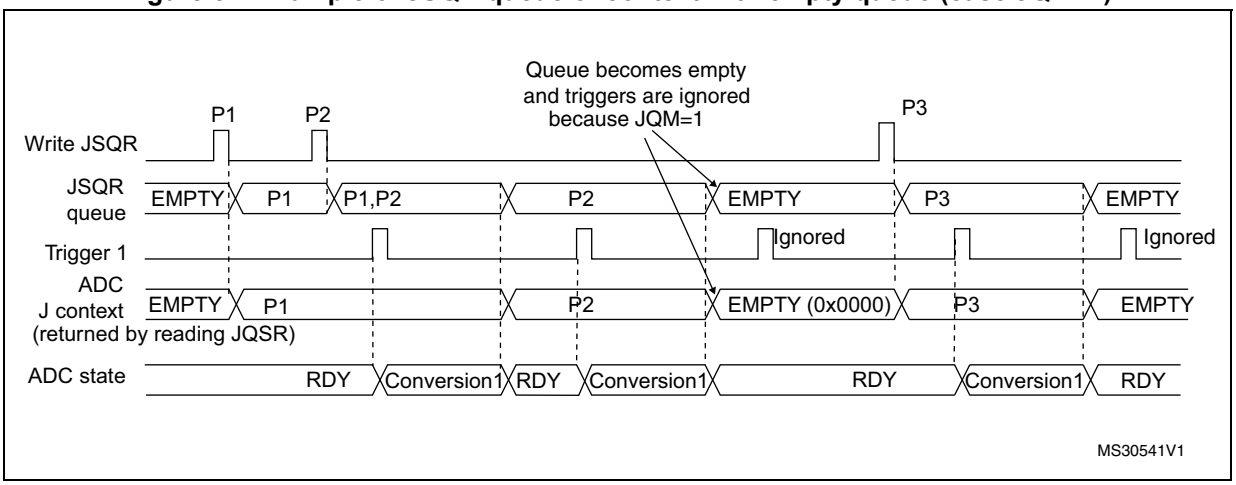

1. Parameters:
   P1: sequence of 1 conversion, hardware trigger 1
   P2: sequence of 1 conversion, hardware trigger 1
   P3: sequence of 1 conversion, hardware trigger 1

Flushing the queue of context

The figures below show the behavior of the context Queue in various situations when the queue is flushed.

Figure 58. Flushing JSQR queue of context by setting JADSTP=1 (JQM=0). Case when JADSTP occurs during an ongoing conversion.

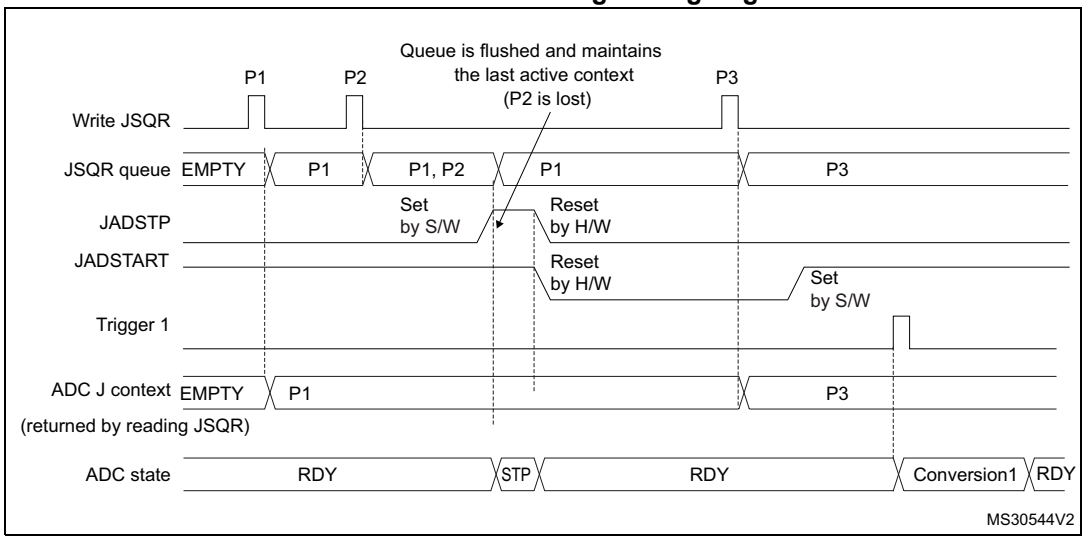

1. Parameters:
   P1: sequence of 1 conversion, hardware trigger 1
   P2: sequence of 1 conversion, hardware trigger 1
   P3: sequence of 1 conversion, hardware trigger 1

Figure 59. Flushing JSQR queue of context by setting JADSTP=1 (JQM=0). Case when JADSTP occurs during an ongoing conversion and a new trigger occurs.

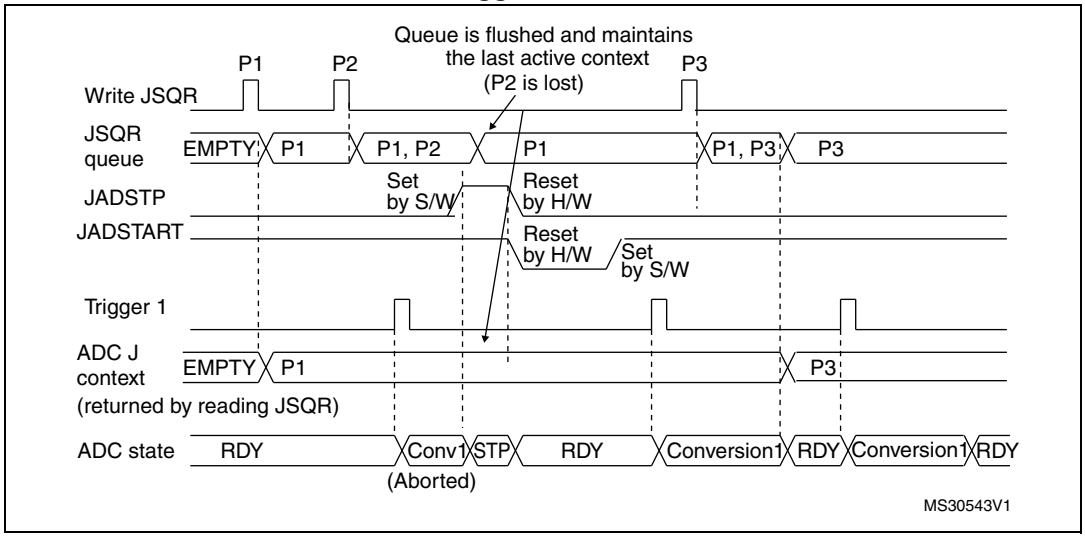

1. Parameters:
   P1: sequence of 1 conversion, hardware trigger 1
   P2: sequence of 1 conversion, hardware trigger 1
   P3: sequence of 1 conversion, hardware trigger 1

Figure 60. Flushing JSQR queue of context by setting JADSTP=1 (JQM=0). Case when JADSTP occurs outside an ongoing conversion

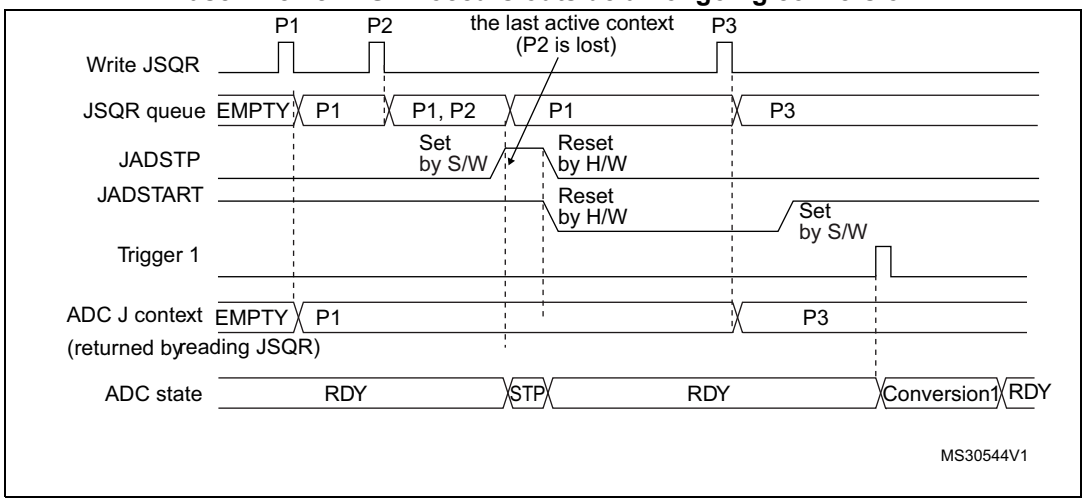

1. Parameters:
   P1: sequence of 1 conversion, hardware trigger 1
   P2: sequence of 1 conversion, hardware trigger 1
   P3: sequence of 1 conversion, hardware trigger 1

Figure 61. Flushing JSQR queue of context by setting JADSTP=1 (JQM=1)

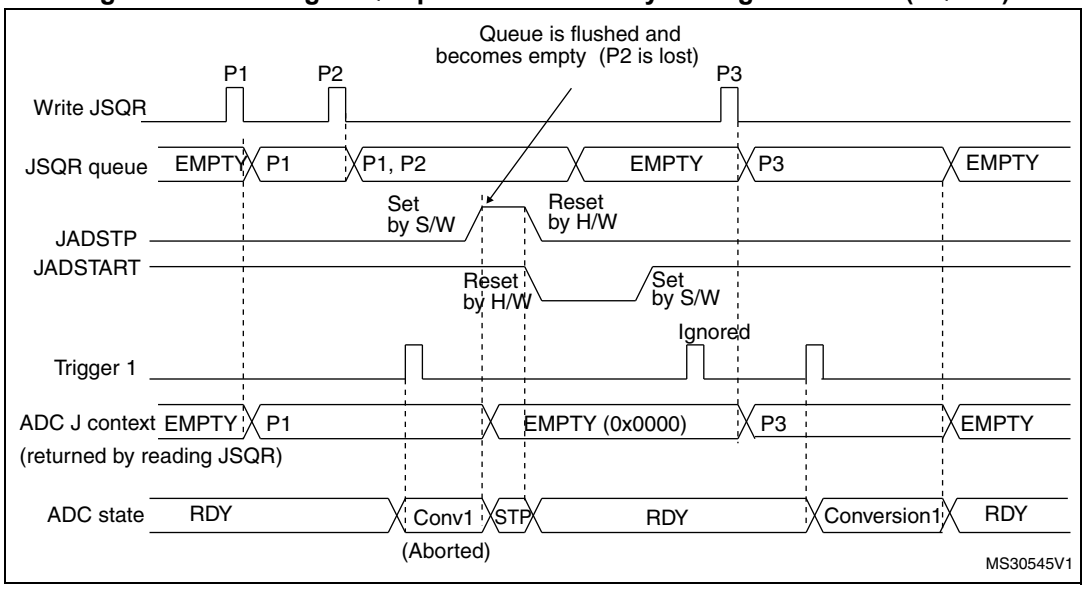

1. Parameters:
   P1: sequence of 1 conversion, hardware trigger 1
   P2: sequence of 1 conversion, hardware trigger 1
   P3: sequence of 1 conversion, hardware trigger 1

Figure 62. Flushing JSQR queue of context by setting ADDIS=1 (JQM=0)

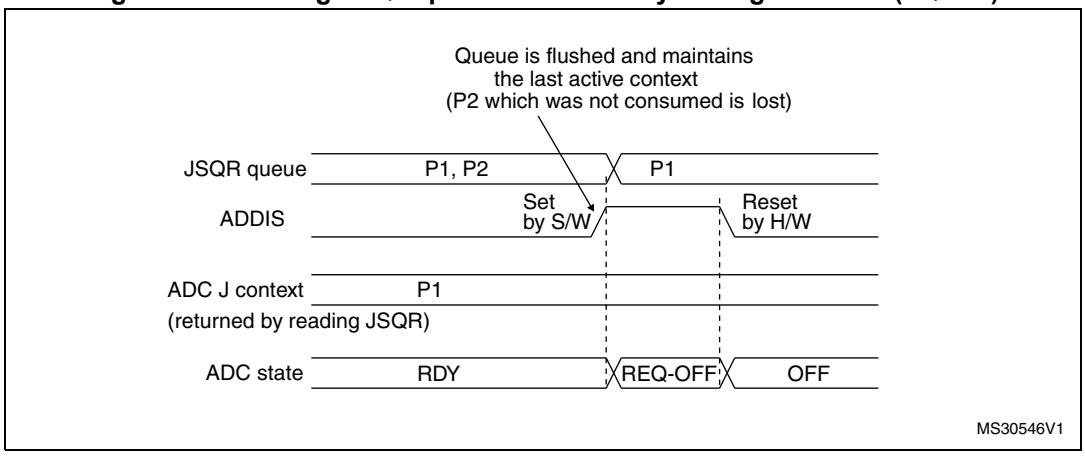

1. Parameters:
   P1: sequence of 1 conversion, hardware trigger 1
   P2: sequence of 1 conversion, hardware trigger 1
   P3: sequence of 1 conversion, hardware trigger 1

Figure 63. Flushing JSQR queue of context by setting ADDIS=1 (JQM=1)

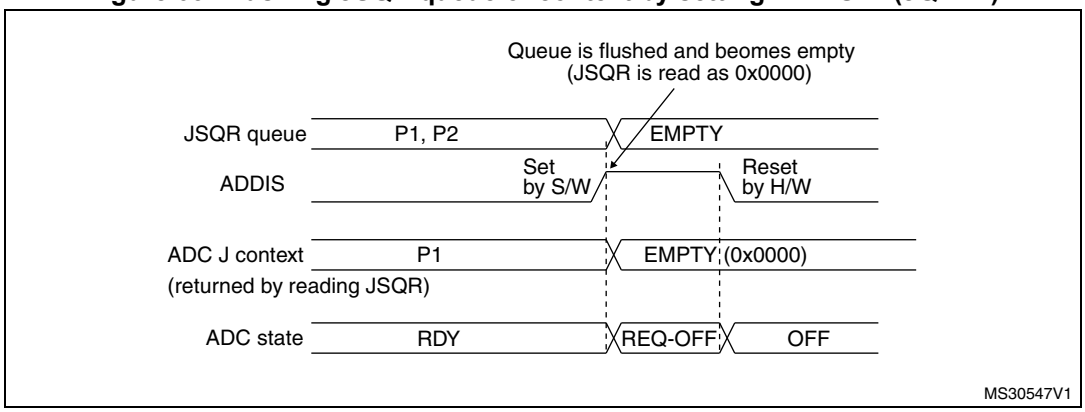

1. Parameters:
   P1: sequence of 1 conversion, hardware trigger 1
   P2: sequence of 1 conversion, hardware trigger 1
   P3: sequence of 1 conversion, hardware trigger 1

Queue of context: Starting the ADC with an empty queue

The following procedure must be followed to start ADC operation with an empty queue, in case the first context is not known at the time the ADC is initialized. This procedure is only applicable when JQM bit is reset:

5. Write a dummy JSQR with JEXTEN not equal to 0 (otherwise triggering a software conversion)
6. Set JADSTART
7. Set JADSTP
8. Wait until JADSTART is reset
9. Set JADSTART.

Disabling the queue

It is possible to disable the queue by setting bit JQDIS=1 into the ADCx_CFGR register.

16.4.22 Programmable resolution (RES) - fast conversion mode

It is possible to perform faster conversion by reducing the ADC resolution.

The resolution can be configured to be either 12, 10, 8, or 6 bits by programming the control bits RES[1:0]. *Figure 68*, *Figure 69*, *Figure 70* and *Figure 71* show the conversion result format with respect to the resolution as well as to the data alignment.

Lower resolution allows faster conversion time for applications where high-data precision is not required. It reduces the conversion time spent by the successive approximation steps according to *Table 61*.

Table 61. T_{SAR} timings depending on resolution

RES (bits)	T_{SAR} (ADC clock cycles)	T_{SAR} (ns) at F_{ADC}=80 MHz	T_{CONV} (ADC clock cycles) (with Sampling Time= 2.5 ADC clock cycles)	T_{CONV} (ns) at F_{ADC}=80 MHz
12	12.5 ADC clock cycles	156.25 ns	15 ADC clock cycles	187.5 ns
10	10.5 ADC clock cycles	131.25 ns	13 ADC clock cycles	162.5 ns
8	8.5 ADC clock cycles	106.25 ns	11 ADC clock cycles	137.5 ns
6	6.5 ADC clock cycles	81.25 ns	9 ADC clock cycles	112.5 ns

16.4.23 End of conversion, end of sampling phase (EOC, JEOC, EOSMP)

The ADC notifies the application for each end of regular conversion (EOC) event and each injected conversion (JEOC) event.

The ADC sets the EOC flag as soon as a new regular conversion data is available in the ADCx_DR register. An interrupt can be generated if bit EOCIE is set. EOC flag is cleared by the software either by writing 1 to it or by reading ADCx_DR.

The ADC sets the JEOC flag as soon as a new injected conversion data is available in one of the ADCx_JDRy register. An interrupt can be generated if bit JEOCIE is set. JEOC flag is cleared by the software either by writing 1 to it or by reading the corresponding ADCx_JDRy register.

The ADC also notifies the end of Sampling phase by setting the status bit EOSMP (for regular conversions only). EOSMP flag is cleared by software by writing 1 to it. An interrupt can be generated if bit EOSMPIE is set.

16.4.24 End of conversion sequence (EOS, JEOS)

The ADC notifies the application for each end of regular sequence (EOS) and for each end of injected sequence (JEOS) event.

The ADC sets the EOS flag as soon as the last data of the regular conversion sequence is available in the ADCx_DR register. An interrupt can be generated if bit EOSIE is set. EOS flag is cleared by the software either by writing 1 to it.

The ADC sets the JEOS flag as soon as the last data of the injected conversion sequence is complete. An interrupt can be generated if bit JEOSIE is set. JEOS flag is cleared by the software either by writing 1 to it.

16.4.25 Timing diagrams example (single/continuous modes, hardware/software triggers)

Figure 64. Single conversions of a sequence, software trigger

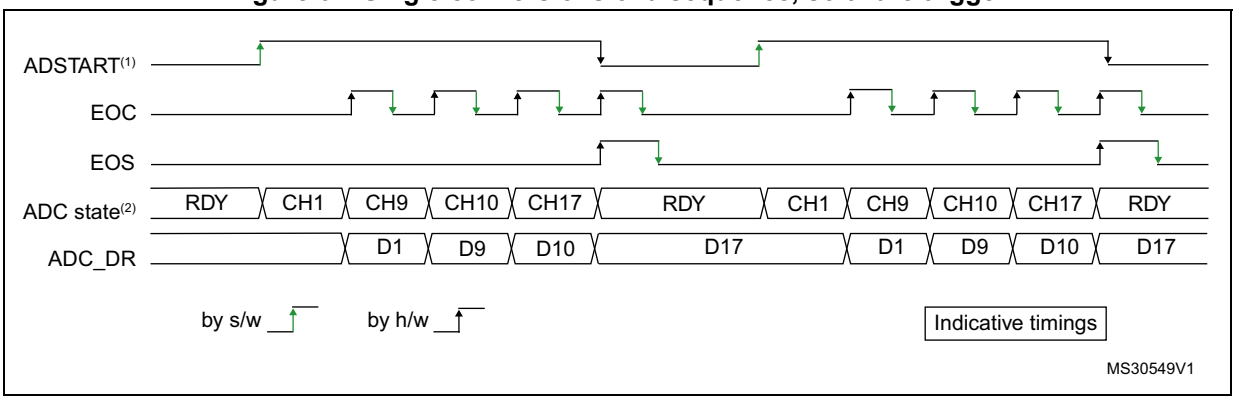

1. EXTEN=0x0, CONT=0
2. Channels selected = 1,9, 10, 17; AUTDLY=0.

Figure 65. Continuous conversion of a sequence, software trigger

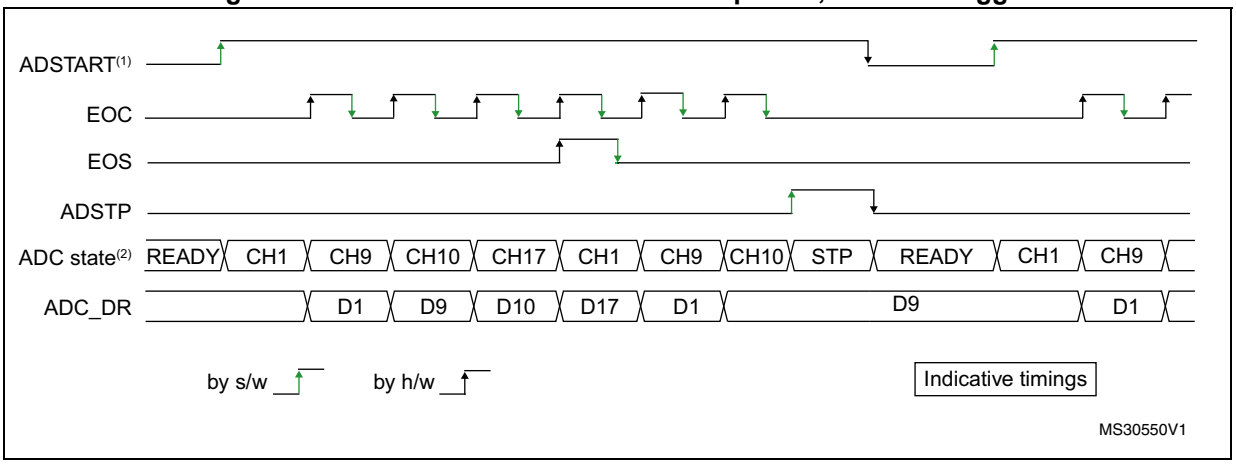

1. EXTEN=0x0, CONT=1
2. Channels selected = 1,9, 10, 17; AUTDLY=0.

Figure 66. Single conversions of a sequence, hardware trigger

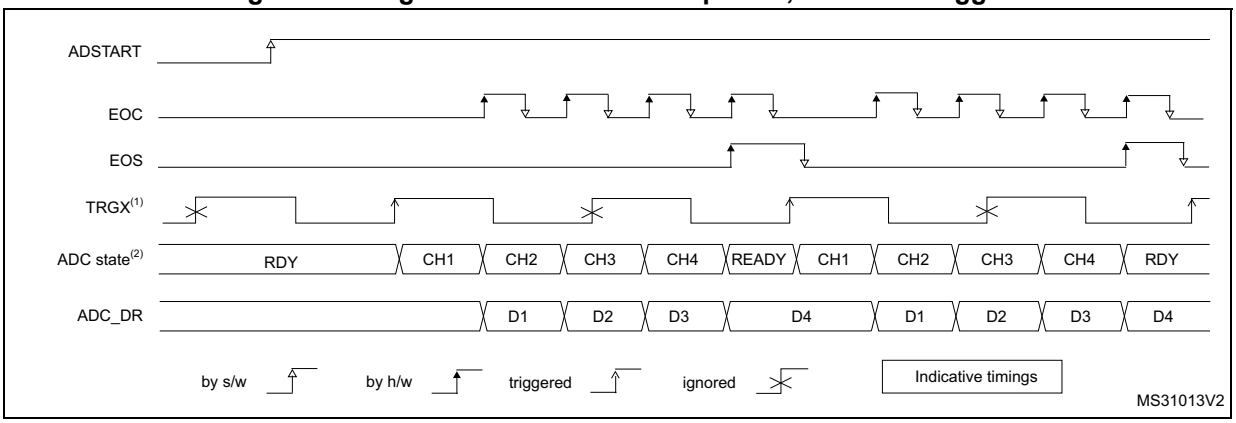

1. TRGx (over-frequency) is selected as trigger source, EXTEN = 01, CONT = 0
2. Channels selected = 1, 2, 3, 4; AUTDLY=0.

Figure 67. Continuous conversions of a sequence, hardware trigger

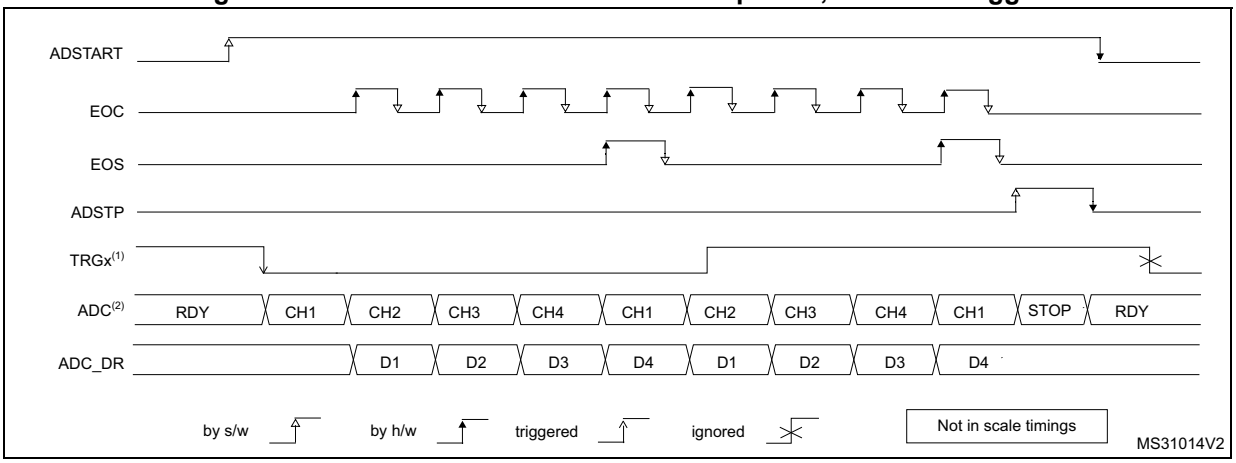

1. TRGx is selected as trigger source, EXTEN = 10, CONT = 1
2. Channels selected = 1, 2, 3, 4; AUTDLY=0.

16.4.26 Data management

Data register, data alignment and offset (ADCx_DR, OFFSETy, OFFSETy_CH, ALIGN)

Data and alignment

At the end of each regular conversion channel (when EOC event occurs), the result of the converted data is stored into the ADCx_DR data register which is 16 bits wide.

At the end of each injected conversion channel (when JEOC event occurs), the result of the converted data is stored into the corresponding ADCx_JDRy data register which is 16 bits wide.

The ALIGN bit in the ADCx_CFGR register selects the alignment of the data stored after conversion. Data can be right- or left-aligned as shown in *Figure 68*, *Figure 69*, *Figure 70* and *Figure 71*.

Special case: when left-aligned, the data are aligned on a half-word basis except when the resolution is set to 6-bit. In that case, the data are aligned on a byte basis as shown in *Figure 70* and *Figure 71*.

Note: Left-alignment is not supported in oversampling mode. When ROVSE and/or JOVSE bit is set, the ALIGN bit value is ignored and the ADC only provides right-aligned data.

Offset

An offset y (y=1,2,3,4) can be applied to a channel by setting the bit OFFSETy_EN=1 into ADCx_OFRy register. The channel to which the offset will be applied is programmed into the bits OFFSETy_CH[4:0] of ADCx_OFRy register. In this case, the converted value is decreased by the user-defined offset written in the bits OFFSETy[11:0]. The result may be a negative value so the read data is signed and the SEXT bit represents the extended sign value.

Note: Offset correction is not supported in oversampling mode. When ROVSE and/or JOVSE bit is set, the value of the OFFSETy_EN bit in ADCx_OFRy register is ignored (considered as reset).

Table 64 describes how the comparison is performed for all the possible resolutions for analog watchdog 1.

Table 62. Offset computation versus data resolution

Resolution (bits RES[1:0])	Substraction between raw converted data and offset:		Result	Comments
	Raw converted Data, left aligned	Offset		
00: 12-bit	DATA[11:0]	OFFSET[11:0]	signed 12-bit data	-
01: 10-bit	DATA[11:2],00	OFFSET[11:0]	signed 10-bit data	The user must configure OFFSET[1:0] to “00”
10: 8-bit	DATA[11:4],00 00	OFFSET[11:0]	signed 8-bit data	The user must configure OFFSET[3:0] to “0000”
11: 6-bit	DATA[11:6],00 0000	OFFSET[11:0]	signed 6-bit data	The user must configure OFFSET[5:0] to “000000”

When reading data from ADCx_DR (regular channel) or from ADCx_JDRy (injected channel, y=1,2,3,4) corresponding to the channel “i”:

- If one of the offsets is enabled (bit OFFSETy_EN=1) for the corresponding channel, the read data is signed.
- If none of the four offsets is enabled for this channel, the read data is not signed.

Figure 68, *Figure 69*, *Figure 70* and *Figure 71* show alignments for signed and unsigned data.

Figure 68. Right alignment (offset disabled, unsigned value)

12-bit data

bit15								bit7							bit0
0	0	0	0	D11	D10	D9	D8	D7	D6	D5	D4	D3	D2	D1	D0

10-bit data

bit15								bit7							bit0
0	0	0	0	0	0	D9	D8	D7	D6	D5	D4	D3	D2	D1	D0

8-bit data

bit15								bit7							bit0
0	0	0	0	0	0	0	0	D7	D6	D5	D4	D3	D2	D1	D0

6-bit data

bit15								bit7							bit0
0	0	0	0	0	0	0	0	0	0	D5	D4	D3	D2	D1	D0

MS31015V1

Figure 69. Right alignment (offset enabled, signed value)

12-bit data

bit15								bit7							bit0
SEXT	SEXT	SEXT	SEXT	D11	D10	D9	D8	D7	D6	D5	D4	D3	D2	D1	D0

10-bit data

bit15								bit7							bit0
SEXT	SEXT	SEXT	SEXT	SEXT	SEXT	D9	D8	D7	D6	D5	D4	D3	D2	D1	D0

8-bit data

bit15								bit7							bit0
SEXT	SEXT	SEXT	SEXT	SEXT	SEXT	SEXT	SEXT	D7	D6	D5	D4	D3	D2	D1	D0

6-bit data

bit15								bit7							bit0
SEXT	SEXT	SEXT	SEXT	SEXT	SEXT	SEXT	SEXT	SEXT	SEXT	D5	D4	D3	D2	D1	D0

MS31016V1

Figure 70. Left alignment (offset disabled, unsigned value)

12-bit data

bit15								bit7							bit0
D11	D10	D9	D8	D7	D6	D5	D4	D3	D2	D1	D0	0	0	0	0

10-bit data

bit15								bit7							bit0
D9	D8	D7	D6	D5	D4	D3	D2	D1	D0	0	0	0	0	0	0

8-bit data

bit15								bit7							bit0
D7	D6	D5	D4	D3	D2	D1	D0	0	0	0	0	0	0	0	0

6-bit data

bit15								bit7							bit0
0	0	0	0	0	0	0	0	D5	D4	D3	D2	D1	D0	0	0

MS31017V1

Figure 71. Left alignment (offset enabled, signed value)

12-bit data

bit15								bit7							bit0
SEXT	D11	D10	D9	D8	D7	D6	D5	D4	D3	D2	D1	D0	0	0	0

10-bit data

bit15								bit7							bit0
SEXT	D9	D8	D7	D6	D5	D4	D3	D2	D1	D0	0	0	0	0	0

8-bit data

bit15								bit7							bit0
SEXT	D7	D6	D5	D4	D3	D2	D1	D0	0	0	0	0	0	0	0

6-bit data

bit15								bit7							bit0
SEXT	SEXT	SEXT	SEXT	SEXT	SEXT	SEXT	SEXT	SEXT	D5	D4	D3	D2	D1	D0	0

MS31018V1

ADC overrun (OVR, OVRMOD)

The overrun flag (OVR) notifies of a buffer overrun event, when the regular converted data was not read (by the CPU or the DMA) before new converted data became available.

The OVR flag is set if the EOC flag is still 1 at the time when a new conversion completes. An interrupt can be generated if bit OVRIE=1.

When an overrun condition occurs, the ADC is still operating and can continue to convert unless the software decides to stop and reset the sequence by setting bit ADSTP=1.

OVR flag is cleared by software by writing 1 to it.

It is possible to configure if data is preserved or overwritten when an overrun event occurs by programming the control bit OVRMOD:

- OVRMOD=0: The overrun event preserves the data register from being overrun: the old data is maintained and the new conversion is discarded and lost. If OVR remains at 1, any further conversions will occur but the result data will be also discarded.
- OVRMOD=1: The data register is overwritten with the last conversion result and the previous unread data is lost. If OVR remains at 1, any further conversions will operate normally and the ADCx_DR register will always contain the latest converted data.

Figure 72. Example of overrun (OVR)

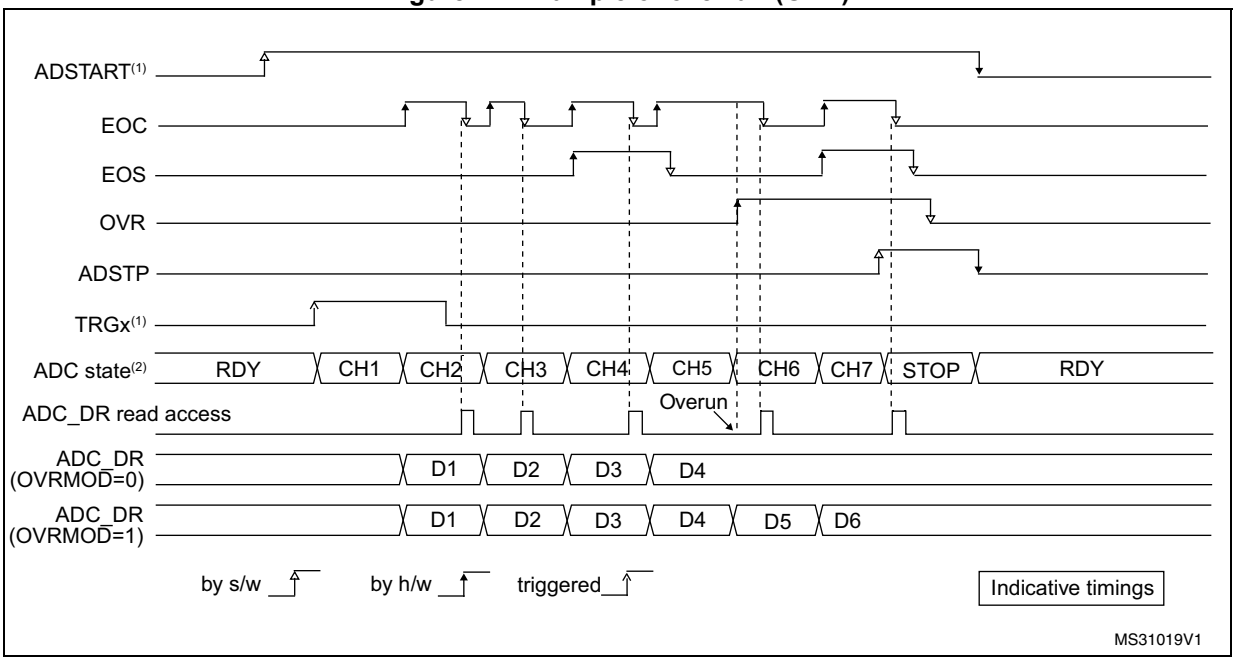

Note: There is no overrun detection on the injected channels since there is a dedicated data register for each of the four injected channels.

Managing a sequence of conversion without using the DMA

If the conversions are slow enough, the conversion sequence can be handled by the software. In this case the software must use the EOC flag and its associated interrupt to handle each data. Each time a conversion is complete, EOC is set and the ADCx_DR register can be read. OVRMOD should be configured to 0 to manage overrun events as an error.

Managing conversions without using the DMA and without overrun

It may be useful to let the ADC convert one or more channels without reading the data each time (if there is an analog watchdog for instance). In this case, the OVRMOD bit must be configured to 1 and OVR flag should be ignored by the software. An overrun event will not prevent the ADC from continuing to convert and the ADCx_DR register will always contain the latest conversion.

Managing conversions using the DMA

Since converted channel values are stored into a unique data register, it is useful to use DMA for conversion of more than one channel. This avoids the loss of the data already stored in the ADCx_DR register.

When the DMA mode is enabled (DMAEN bit set to 1 in the ADCx_CFGR register in single ADC mode or MDMA different from 0b00 in dual ADC mode), a DMA request is generated after each conversion of a channel. This allows the transfer of the converted data from the ADCx_DR register to the destination location selected by the software.

Despite this, if an overrun occurs (OVR=1) because the DMA could not serve the DMA transfer request in time, the ADC stops generating DMA requests and the data corresponding to the new conversion is not transferred by the DMA. Which means that all the data transferred to the RAM can be considered as valid.

Depending on the configuration of OVRMOD bit, the data is either preserved or overwritten (refer to *Section : ADC overrun (OVR, OVRMOD)*).

The DMA transfer requests are blocked until the software clears the OVR bit.

Two different DMA modes are proposed depending on the application use and are configured with bit DMACFG of the ADCx_CFGR register in single ADC mode, or with bit DMACFG of the ADCx_CCR register in dual ADC mode:

- DMA one shot mode (DMACFG=0).
  This mode is suitable when the DMA is programmed to transfer a fixed number of data.
- DMA circular mode (DMACFG=1)
  This mode is suitable when programming the DMA in circular mode.

DMA one shot mode (DMACFG=0)

In this mode, the ADC generates a DMA transfer request each time a new conversion data is available and stops generating DMA requests once the DMA has reached the last DMA transfer (when DMA_EOT interrupt occurs - refer to DMA paragraph) even if a conversion has been started again.

When the DMA transfer is complete (all the transfers configured in the DMA controller have been done):

- The content of the ADC data register is frozen.
- Any ongoing conversion is aborted with partial result discarded.
- No new DMA request is issued to the DMA controller. This avoids generating an overrun error if there are still conversions which are started.
- Scan sequence is stopped and reset.
- The DMA is stopped.

DMA circular mode (DMACFG=1)

In this mode, the ADC generates a DMA transfer request each time a new conversion data is available in the data register, even if the DMA has reached the last DMA transfer. This allows configuring the DMA in circular mode to handle a continuous analog input data stream.

16.4.27 Dynamic low-power features

Auto-delayed conversion mode (AUTDLY)

The ADC implements an auto-delayed conversion mode controlled by the AUTDLY configuration bit. Auto-delayed conversions are useful to simplify the software as well as to optimize performance of an application clocked at low frequency where there would be risk of encountering an ADC overrun.

When AUTDLY=1, a new conversion can start only if all the previous data of the same group has been treated:

- For a regular conversion: once the ADCx_DR register has been read or if the EOC bit has been cleared (see *Figure 73*).
- For an injected conversion: when the JEOS bit has been cleared (see *Figure 74*).

This is a way to automatically adapt the speed of the ADC to the speed of the system which will read the data.

The delay is inserted after each regular conversion (whatever DISCEN=0 or 1) and after each sequence of injected conversions (whatever JDISCEN=0 or 1).

Note: There is no delay inserted between each conversions of the injected sequence, except after the last one.

During a conversion, a hardware trigger event (for the same group of conversions) occurring during this delay is ignored.

Note: This is not true for software triggers where it remains possible during this delay to set the bits ADSTART or JADSTART to re-start a conversion: it is up to the software to read the data before launching a new conversion.

No delay is inserted between conversions of different groups (a regular conversion followed by an injected conversion or conversely):

- If an injected trigger occurs during the automatic delay of a regular conversion, the injected conversion starts immediately (see *Figure 74*).
- Once the injected sequence is complete, the ADC waits for the delay (if not ended) of the previous regular conversion before launching a new regular conversion (see *Figure 76*).

The behavior is slightly different in auto-injected mode (JAUTO=1) where a new regular conversion can start only when the automatic delay of the previous injected sequence of conversion has ended (when JEOS has been cleared). This is to ensure that the software can read all the data of a given sequence before starting a new sequence (see *Figure 77*).

To stop a conversion in continuous auto-injection mode combined with autodelay mode (JAUTO=1, CONT=1 and AUTDLY=1), follow the following procedure:

1. Wait until JEOS=1 (no more conversions are restarted)
2. Clear JEOS,
3. Set ADSTP=1
4. Read the regular data.

If this procedure is not respected, a new regular sequence can re-start if JEOS is cleared after ADSTP has been set.

In AUTDLY mode, a hardware regular trigger event is ignored if it occurs during an already ongoing regular sequence or during the delay that follows the last regular conversion of the sequence. It is however considered pending if it occurs after this delay, even if it occurs during an injected sequence of the delay that follows it. The conversion then starts at the end of the delay of the injected sequence.

In AUTDLY mode, a hardware injected trigger event is ignored if it occurs during an already ongoing injected sequence or during the delay that follows the last injected conversion of the sequence.

Figure 73. AUTODLY=1, regular conversion in continuous mode, software trigger

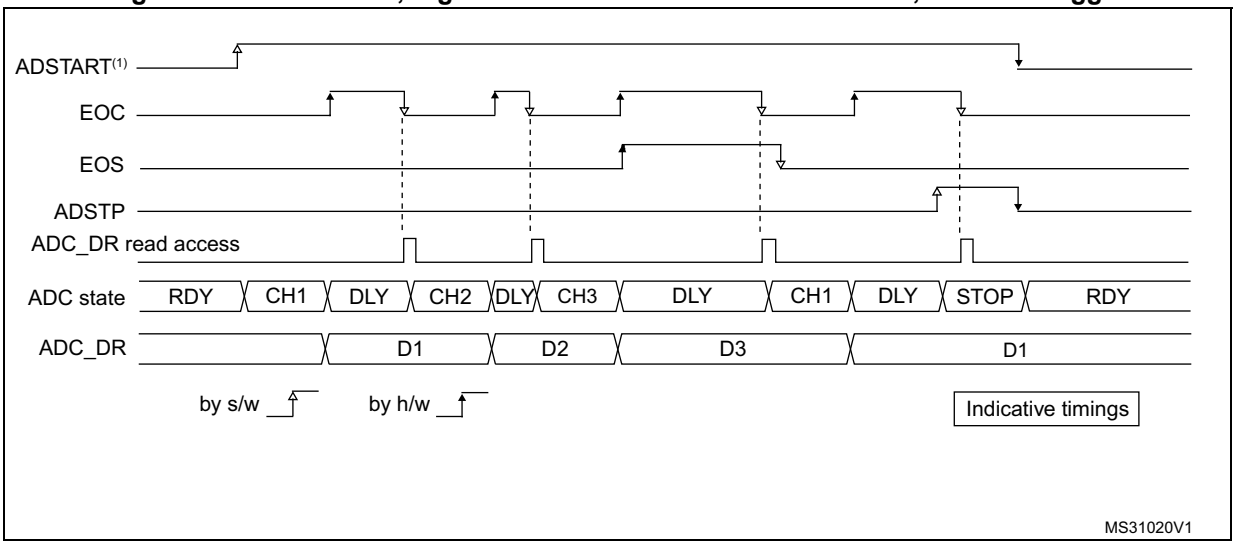

1. AUTDLY=1
2. Regular configuration: EXTEN=0x0 (SW trigger), CONT=1, CHANNELS = 1,2,3
3. Injected configuration DISABLED

Figure 74. AUTODLY=1, regular HW conversions interrupted by injected conversions (DISCEN=0; JDISCEN=0)

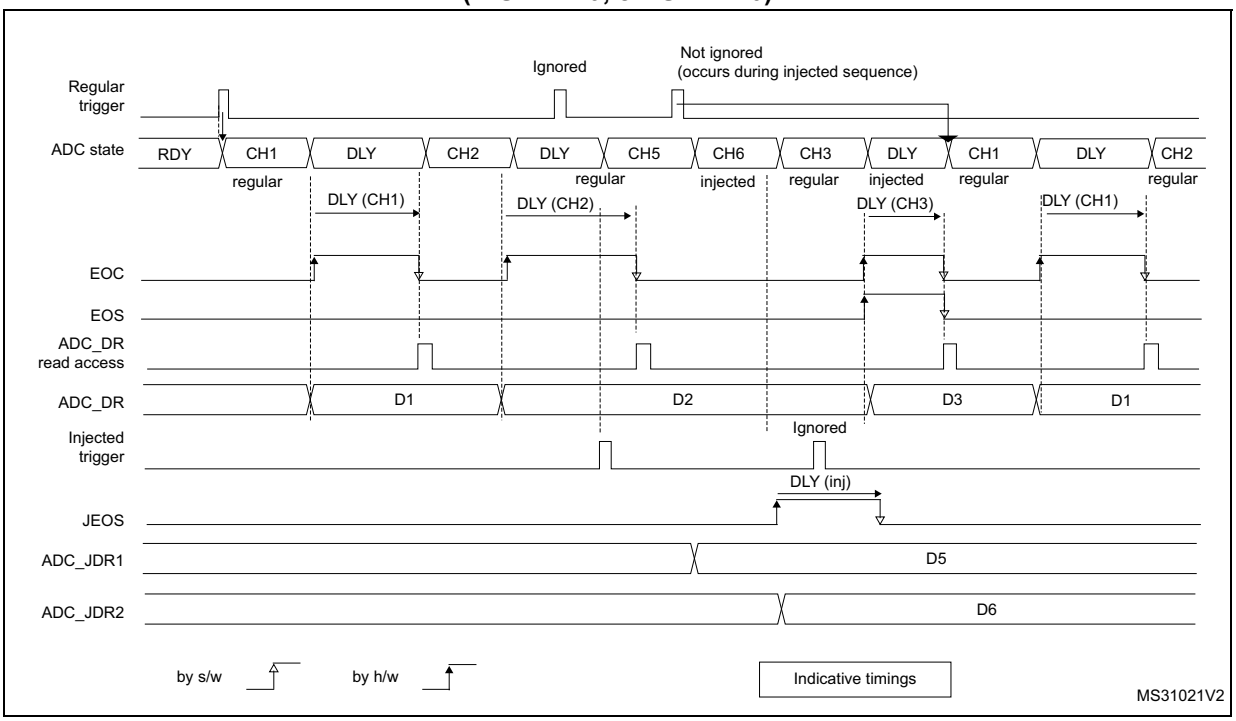

1. AUTDLY=1
2. Regular configuration: EXTEN=0x1 (HW trigger), CONT=0, DISCEN=0, CHANNELS = 1, 2, 3
3. Injected configuration: JEXTEN=0x1 (HW Trigger), JDISCEN=0, CHANNELS = 5,6

Figure 75. AUTODLY=1, regular HW conversions interrupted by injected conversions (DISCEN=1, JDISCEN=1)

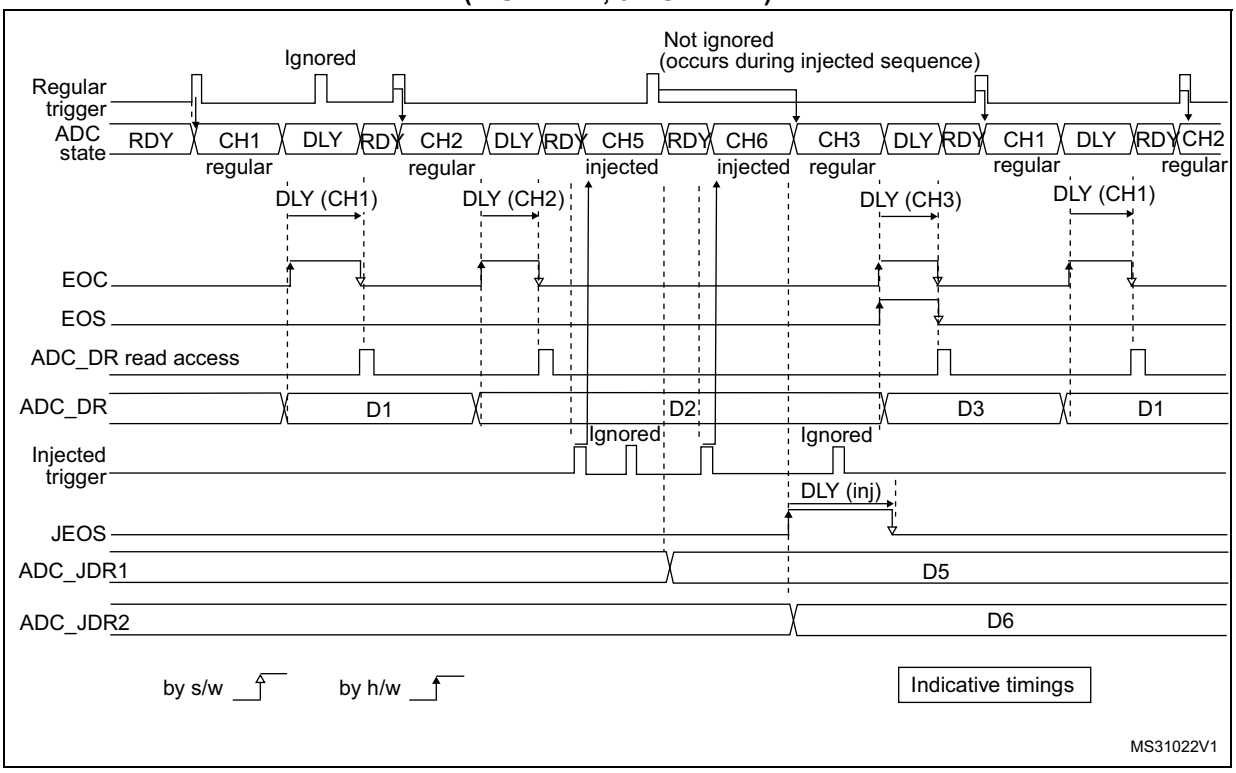

1. AUTDLY=1
2. Regular configuration: EXTEN=0x1 (HW trigger), CONT=0, DISCEN=1, DISCNUM=1, CHANNELS = 1, 2, 3.
3. Injected configuration: JEXTEN=0x1 (HW Trigger), JDISCEN=1, CHANNELS = 5,6

Figure 76. AUTODLY=1, regular continuous conversions interrupted by injected conversions

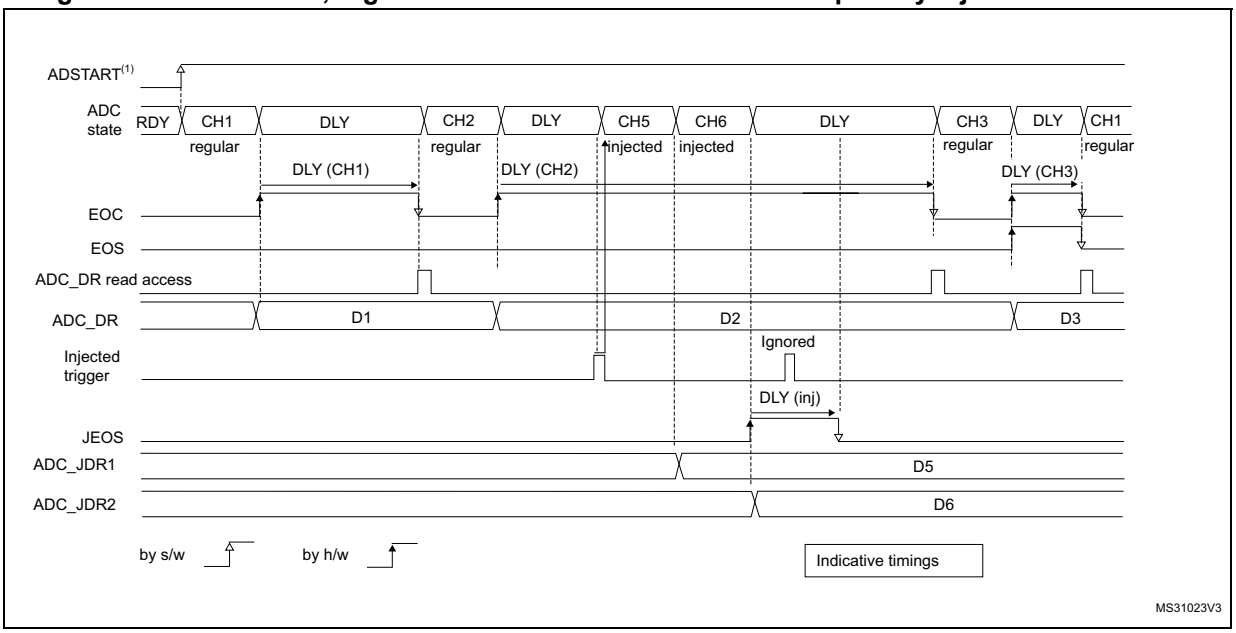

1. AUTDLY=1
2. Regular configuration: EXTEN=0x0 (SW trigger), CONT=1, DISCEN=0, CHANNELS = 1, 2, 3
3. Injected configuration: JEXTEN=0x1 (HW Trigger), JDISCEN=0, CHANNELS = 5,6

Figure 77. AUTODLY=1 in auto- injected mode (JAUTO=1)

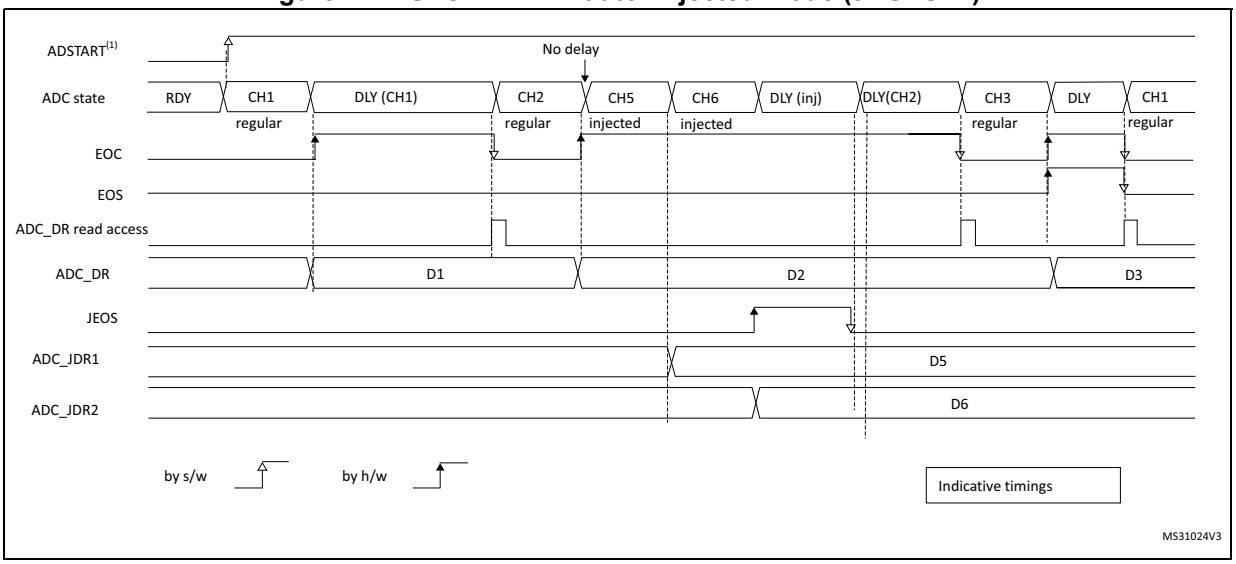

1. AUTDLY=1
2. Regular configuration: EXTEN=0x0 (SW trigger), CONT=1, DISCEN=0, CHANNELS = 1, 2
3. Injected configuration: JAUTO=1, CHANNELS = 5,6

16.4.28 Analog window watchdog (AWD1EN, JAWD1EN, AWD1SGL, AWD1CH, AWD2CH, AWD3CH, AWD_HTx, AWD_LTx, AWDx)

The three AWD analog watchdogs monitor whether some channels remain within a configured voltage range (window).

Figure 78. Analog watchdog's guarded area

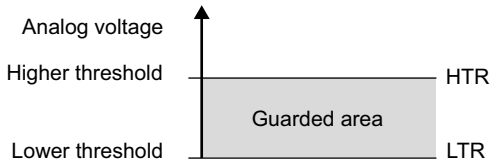

AWDx flag and interrupt

An interrupt can be enabled for each of the 3 analog watchdogs by setting AWDxIE in the ADCx_IER register (x=1,2,3).

AWDx (x=1,2,3) flag is cleared by software by writing 1 to it.

The ADC conversion result is compared to the lower and higher thresholds before alignment.

Description of analog watchdog 1

The AWD analog watchdog 1 is enabled by setting the AWD1EN bit in the ADCx_CFGR register. This watchdog monitors whether either one selected channel or all enabled channels(1) remain within a configured voltage range (window).

Table 63 shows how the ADCx_CFGR registers should be configured to enable the analog watchdog on one or more channels.

Table 63. Analog watchdog channel selection

Channels guarded by the analog watchdog	AWD1SGL bit	AWD1EN bit	JAWD1EN bit
None	x	0	0
All injected channels	0	0	1
All regular channels	0	1	0
All regular and injected channels	0	1	1
Single(1) injected channel	1	0	1
Single(1) regular channel	1	1	0
Single(1) regular or injected channel	1	1	1

1. Selected by the AWD1CH[4:0] bits. The channels must also be programmed to be converted in the appropriate regular or injected sequence.

The AWD1 analog watchdog status bit is set if the analog voltage converted by the ADC is below a lower threshold or above a higher threshold.

These thresholds are programmed in bits HT1[11:0] and LT1[11:0] of the ADCx_TR1 register for the analog watchdog 1. When converting data with a resolution of less than 12 bits (according to bits RES[1:0]), the LSB of the programmed thresholds must be kept cleared because the internal comparison is always performed on the full 12-bit raw converted data (left aligned).

Table 64 describes how the comparison is performed for all the possible resolutions for analog watchdog 1.

Table 64. Analog watchdog 1 comparison

Resolution (bit RES[1:0])	Analog watchdog comparison between:		Comments
	Raw converted data, left aligned(1)	Thresholds	
00: 12-bit	DATA[11:0]	LT1[11:0] and HT1[11:0]	-
01: 10-bit	DATA[11:2],00	LT1[11:0] and HT1[11:0]	User must configure LT1[1:0] and HT1[1:0] to 00
10: 8-bit	DATA[11:4],0000	LT1[11:0] and HT1[11:0]	User must configure LT1[3:0] and HT1[3:0] to 0000
11: 6-bit	DATA[11:6],000000	LT1[11:0] and HT1[11:0]	User must configure LT1[5:0] and HT1[5:0] to 000000

1. The watchdog comparison is performed on the raw converted data before any alignment calculation and before applying any offsets (the data which is compared is not signed).

Description of analog watchdog 2 and 3

The second and third analog watchdogs are more flexible and can guard several selected channels by programming the corresponding bits in AWDCHx[19:0] (x=2,3).

The corresponding watchdog is enabled when any bit of AWDCHx[19:0] (x=2,3) is set.

They are limited to a resolution of 8 bits and only the 8 MSBs of the thresholds can be programmed into HTx[7:0] and LTx[7:0]. *Table 65* describes how the comparison is performed for all the possible resolutions.

Table 65. Analog watchdog 2 and 3 comparison

Resolution (bits RES[1:0])	Analog watchdog comparison between:		Comments
	Raw converted data, left aligned(1)	Thresholds	
00: 12-bit	DATA[11:4]	LTx[7:0] and HTx[7:0]	DATA[3:0] are not relevant for the comparison
01: 10-bit	DATA[11:4]	LTx[7:0] and HTx[7:0]	DATA[3:2] are not relevant for the comparison
10: 8-bit	DATA[11:4]	LTx[7:0] and HTx[7:0]	-
11: 6-bit	DATA[11:6],00	LTx[7:0] and HTx[7:0]	User must configure LTx[1:0] and HTx[1:0] to 00

1. The watchdog comparison is performed on the raw converted data before any alignment calculation and before applying any offsets (the data which is compared is not signed).

ADCy_AWDx_OUT signal output generation

Each analog watchdog is associated to an internal hardware signal ADCy_AWDx_OUT (y=ADC number, x=watchdog number) which is directly connected to the ETR input (external trigger) of some on-chip timers. Refer to the on-chip timers section to understand how to select the ADCy_AWDx_OUT signal as ETR.

ADCy_AWDx_OUT is activated when the associated analog watchdog is enabled:

- ADCy_AWDx_OUT is set when a guarded conversion is outside the programmed thresholds.
- ADCy_AWDx_OUT is reset after the end of the next guarded conversion which is inside the programmed thresholds (It remains at 1 if the next guarded conversions are still outside the programmed thresholds).
- ADCy_AWDx_OUT is also reset when disabling the ADC (when setting ADDIS=1). Note that stopping regular or injected conversions (setting ADSTP=1 or JADSTP=1) has no influence on the generation of ADCy_AWDx_OUT.

Note: AWDx flag is set by hardware and reset by software: AWDx flag has no influence on the generation of ADCy_AWDx_OUT (ex: ADCy_AWDx_OUT can toggle while AWDx flag remains at 1 if the software did not clear the flag).

Figure 79. ADCy_AWDx_OUT signal generation (on all regular channels)

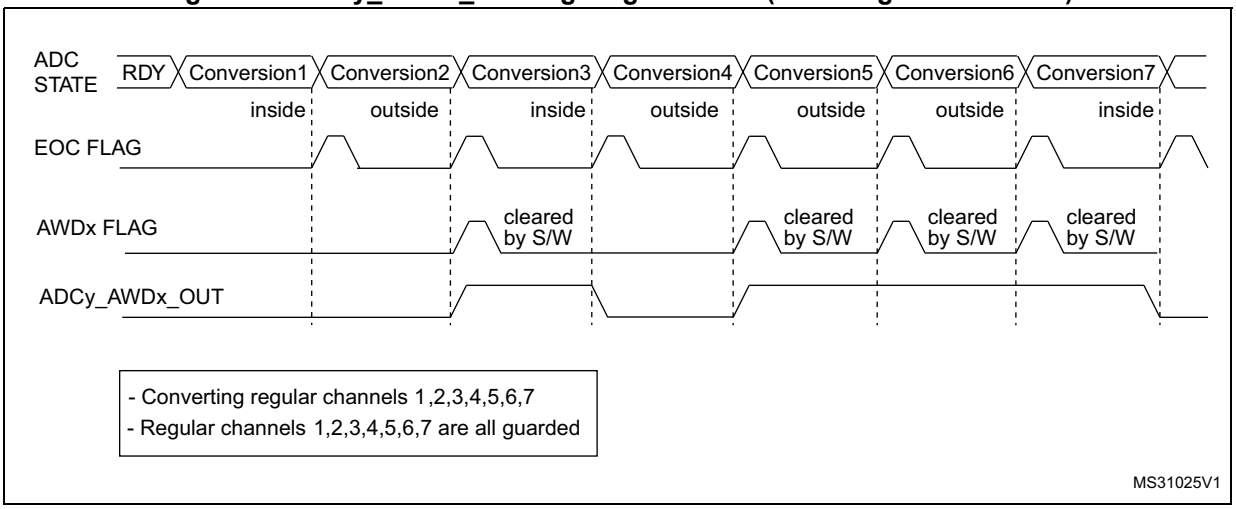

Figure 80. ADCy_AWDx_OUT signal generation (AWDx flag not cleared by SW)

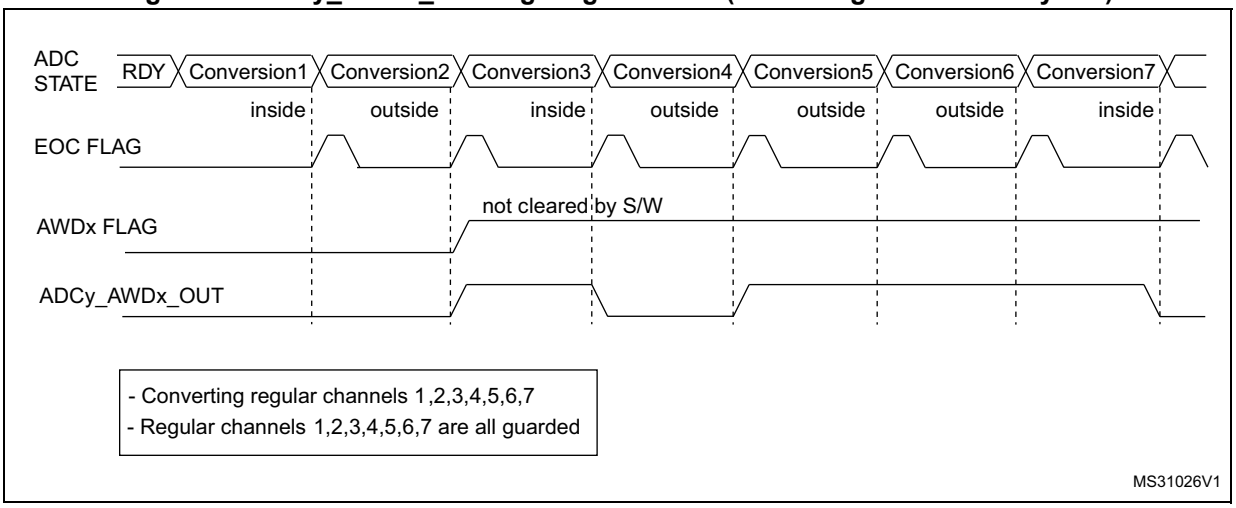

Figure 81. ADCy_AWDx_OUT signal generation (on a single regular channel)

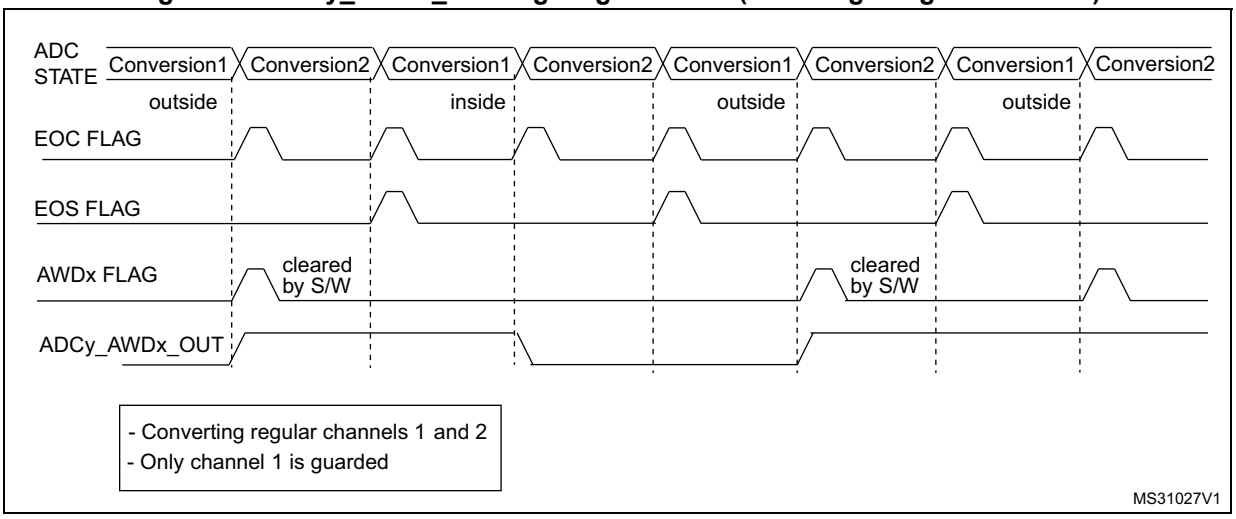

Figure 82. ADCy_AWDx_OUT signal generation (on all injected channels)

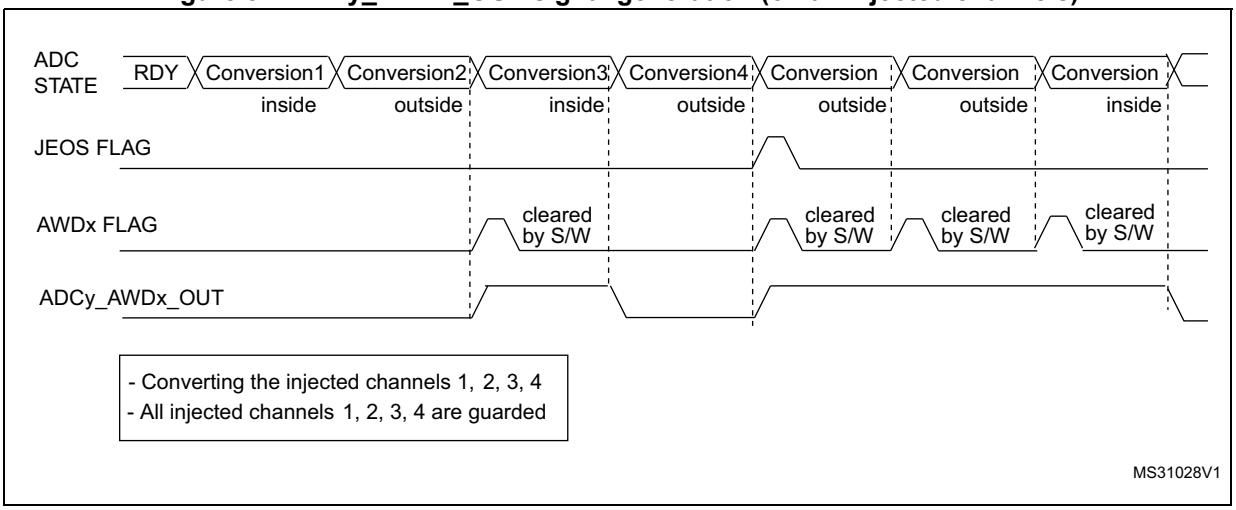

16.4.29 Oversampler

The oversampling unit performs data pre-processing to offload the CPU. It is able to handle multiple conversions and average them into a single data with increased data width, up to 16-bit.

It provides a result with the following form, where N and M can be adjusted:

$$\text{Result} = \frac{1}{M} \times \sum_{n=0}^{n=N-1} \text{Conversion}(t_n)$$

It allows to perform by hardware the following functions: averaging, data rate reduction, SNR improvement, basic filtering.

The oversampling ratio N is defined using the OVFS[2:0] bits in the ADCx_CFGR2 register, and can range from 2x to 256x. The division coefficient M consists of a right bit shift up to 8 bits, and is defined using the OVSS[3:0] bits in the ADCx_CFGR2 register.

The summation unit can yield a result up to 20 bits (256x 12-bit results), which is first shifted right. It is then truncated to the 16 least significant bits, rounded to the nearest value using the least significant bits left apart by the shifting, before being finally transferred into the ADCx_DR data register.

Note: If the intermediary result after the shifting exceeds 16-bit, the result is truncated as is, without saturation.

Figure 83. 20-bit to 16-bit result truncation

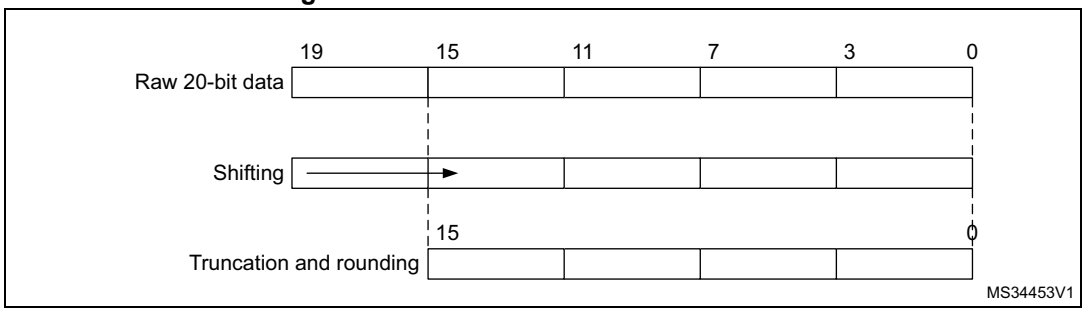

The *Figure 84* gives a numerical example of the processing, from a raw 20-bit accumulated data to the final 16-bit result.

Figure 84. Numerical example with 5-bits shift and rounding

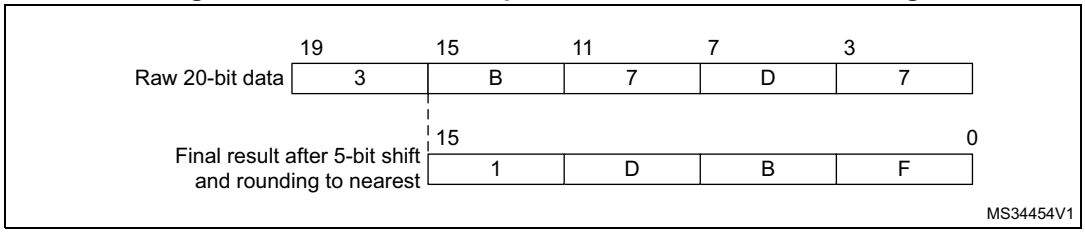

The *Table 66* below gives the data format for the various N and M combinations, for a raw conversion data equal to 0xFFF.

Table 66. Maximum output results versus N and M (gray cells indicate truncation)

Over sampling ratio	Max Raw data	No-shift OVSS = 0000	1-bit shift OVSS = 0001	2-bit shift OVSS = 0010	3-bit shift OVSS = 0011	4-bit shift OVSS = 0100	5-bit shift OVSS = 0101	6-bit shift OVSS = 0110	7-bit shift OVSS = 0111	8-bit shift OVSS = 1000
2x	0x1FFE	0x1FFE	0x0FFF	0x0800	0x0400	0x0200	0x0100	0x0080	0x0040	0x020
4x	0x3FFC	0x3FFC	0x1FFE	0x0FFF	0x0800	0x0400	0x0200	0x0100	0x0080	0x0040
8x	0x7FF8	0x7FF8	0x3FFC	0x1FFE	0x0FFF	0x0800	0x0400	0x0200	0x0100	0x0080
16x	0xFFF0	0xFFF0	0x7FF8	0x3FFC	0x1FFE	0x0FFF	0x0800	0x0400	0x0200	0x0100
32x	0x1FFE0	0xFFE0	0xFFF0	0x7FF8	0x3FFC	0x1FFE	0x0FFF	0x0800	0x0400	0x0200
64x	0x3FFC0	0xFFC0	0xFFE0	0xFFF0	0x7FF8	0x3FFC	0x1FFE	0x0FFF	0x0800	0x0400
128x	0x7FF80	0xFF80	0xFFC0	0xFFE0	0xFFF0	0x7FF8	0x3FFC	0x1FFE	0x0FFF	0x0800
256x	0xFFF00	0xFF00	0xFF80	0xFFC0	0xFFE0	0xFFF0	0x7FF8	0x3FFC	0x1FFE	0x0FFF

There are no changes for conversion timings in oversampled mode: the sample time is maintained equal during the whole oversampling sequence. A new data is provided every N conversions, with an equivalent delay equal to N x T_{CONV} = N x (t_{SMPL} + t_{SAR}). The flags are set as follow:

- the end of the sampling phase (EOSMP) is set after each sampling phase
- the end of conversion (EOC) occurs once every N conversions, when the oversampled result is available
- the end of sequence (EOS) occurs once the sequence of oversampled data is completed (i.e. after N x sequence length conversions total)

Single ADC operating modes support when oversampling

In oversampling mode, most of the ADC operating modes are maintained:

- Single or continuous mode conversions
- ADC conversions start either by software or with triggers
- ADC stop during a conversion (abort)
- Data read via CPU or DMA with overrun detection
- Low-power modes (AUTDLY)
- Programmable resolution: in this case, the reduced conversion values (as per RES[1:0] bits in ADCx_CFGR1 register) are accumulated, truncated, rounded and shifted in the same way as 12-bit conversions are

Note: The alignment mode is not available when working with oversampled data. The ALIGN bit in ADCx_CFGR1 is ignored and the data are always provided right-aligned.

Note: Offset correction is not supported in oversampling mode. When ROVSE and/or JOVSE bit is set, the value of the OFFSETy_EN bit in ADCx_OFRy register is ignored (considered as reset).

Analog watchdog

The analog watchdog functionality is maintained (AWDSGL and AWDEN bits), with the following difference:

- the RES[1:0] bits are ignored, comparison is always done on using the full 12-bit values HT[11:0] and LT[11:0]
- the comparison is performed on the most significant 12-bit of the 16-bit oversampled results ADCx_DR[15:4]

Note: Care must be taken when using high shifting values, this will reduce the comparison range. For instance, if the oversampled result is shifted by 4 bits, thus yielding a 12-bit data right-aligned, the effective analog watchdog comparison can only be performed on 8 bits. The comparison is done between ADCx_DR[11:4] and HT[0:7] / LT[[0:7], and HT[11:8] / LT[11:8] must be kept reset.

Triggered mode

The averager can also be used for basic filtering purpose. Although not a very powerful filter (slow roll-off and limited stop band attenuation), it can be used as a notch filter to reject constant parasitic frequencies (typically coming from the mains or from a switched mode power supply). For this purpose, a specific discontinuous mode can be enabled with TROVS bit in ADCx_CFGR2, to be able to have an oversampling frequency defined by a user and independent from the conversion time itself.

The *Figure 85* below shows how conversions are started in response to triggers during discontinuous mode.

If the TROVS bit is set, the content of the DISCEN bit is ignored and considered as 1.

Figure 85. Triggered regular oversampling mode (TROVS bit = 1)

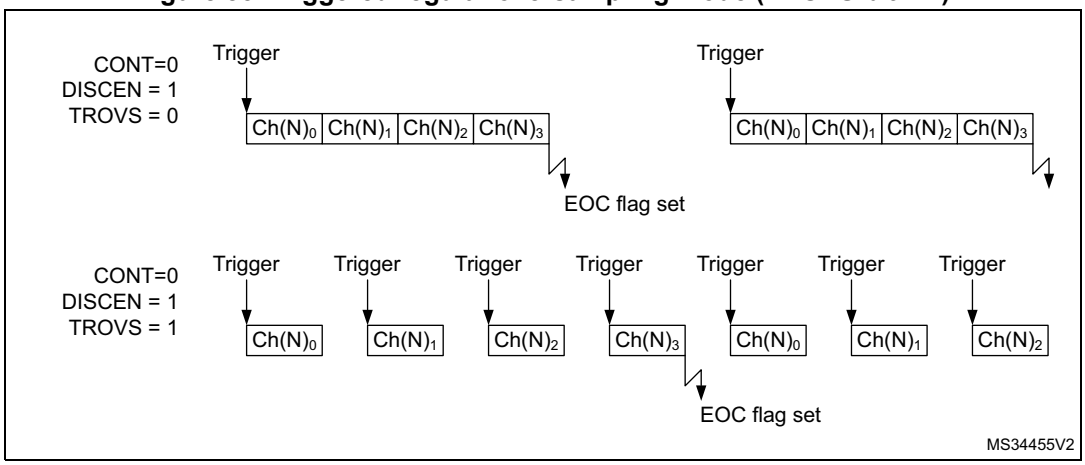

Injected and regular sequencer management when oversampling

In oversampling mode, it is possible to have differentiated behavior for injected and regular sequencers. The oversampling can be enabled for both sequencers with some limitations if they have to be used simultaneously (this is related to a unique accumulation unit).

Oversampling regular channels only

The regular oversampling mode bit ROVSM defines how the regular oversampling sequence is resumed if it is interrupted by injected conversion:

- in continued mode, the accumulation re-starts from the last valid data (prior to the conversion abort request due to the injected trigger). This ensures that oversampling will be completed whatever the injection frequency (providing at least one regular conversion can be completed between triggers);
- in resumed mode, the accumulation re-starts from 0 (previous conversions results are ignored). This mode allows to guarantee that all data used for oversampling were converted back-to-back within a single timeslot. Care must be taken to have a injection trigger period above the oversampling period length. If this condition is not respected, the oversampling cannot be completed and the regular sequencer will be blocked.

The *Figure 86* gives examples for a 4x oversampling ratio.

Figure 86. Regular oversampling modes (4x ratio)

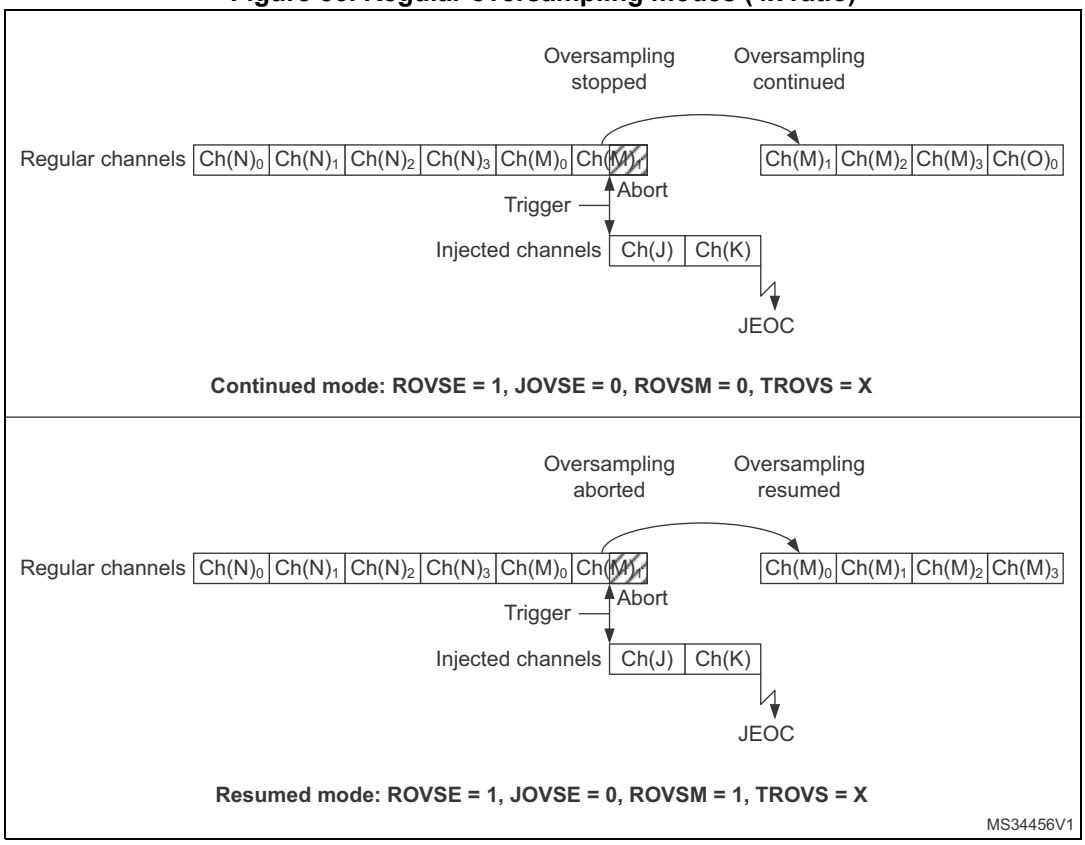

Oversampling Injected channels only

The Injected oversampling mode bit JOVSE enables oversampling solely for conversions in the injected sequencer.

Oversampling regular and Injected channels

It is possible to have both ROVSE and JOVSE bits set. In this case, the regular oversampling mode is forced to resumed mode (ROVSM bit ignored), as represented on *Figure 87* below.

Figure 87. Regular and injected oversampling modes used simultaneously

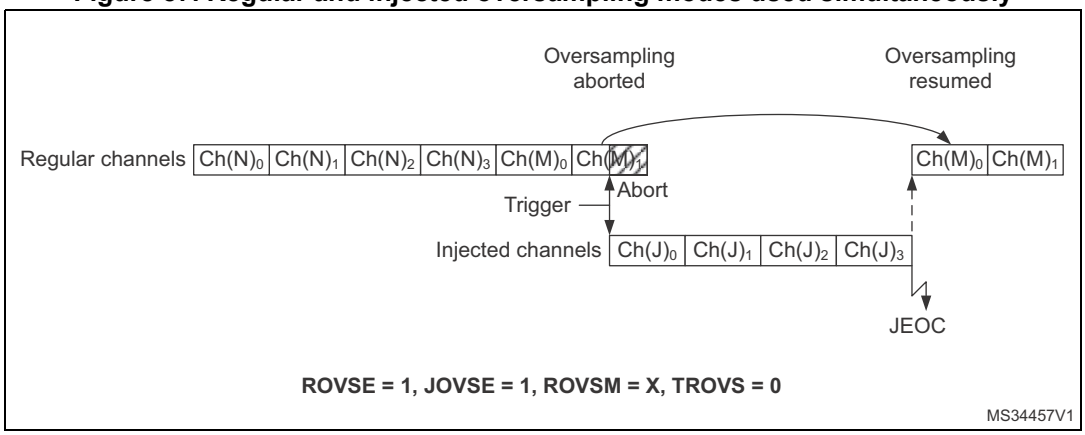

Triggered regular oversampling with injected conversions

It is possible to have triggered regular mode with injected conversions. In this case, the injected mode oversampling mode must be disabled, and the ROVSM bit is ignored (resumed mode is forced). The JOVSE bit must be reset. The behavior is represented on *Figure 88* below.

Figure 88. Triggered regular oversampling with injection

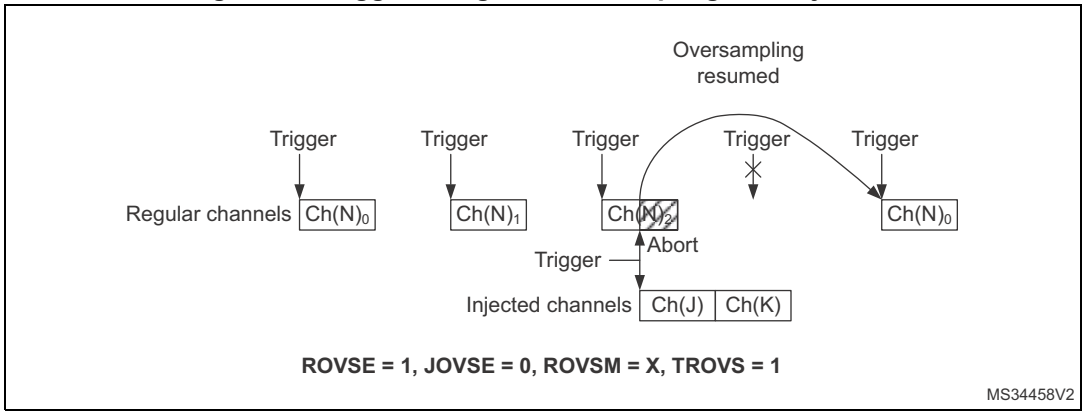

Autoinjected mode

It is possible to oversample auto-injected sequences and have all conversions results stored in registers to save a DMA resource. This mode is available only with both regular and injected oversampling active: JAUTO = 1, ROVSE = 1 and JOVSE = 1, other combinations are not supported. The ROVSM bit is ignored in auto-injected mode. The *Figure 89* below shows how the conversions are sequenced.

Figure 89. Oversampling in auto-injected mode

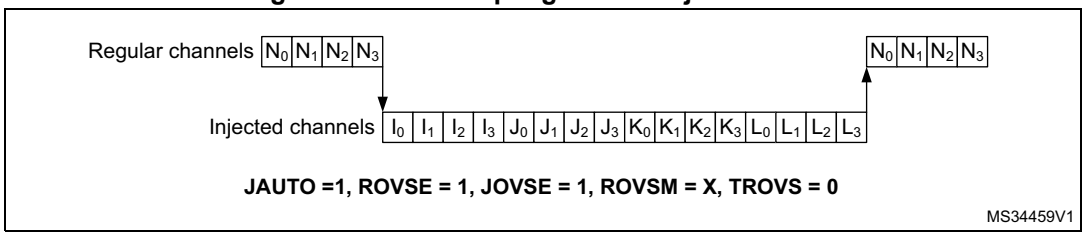

It is possible to have also the triggered mode enabled, using the TROVS bit. In this case, the ADC must be configured as following: JAUTO = 1, DISCEN = 0, JDISCEN = 0, ROVSE = 1, JOVSE = 1 and TROVSE = 1.

Dual ADC modes support when oversampling (on devices with 2 ADCs)

It is possible to have oversampling enabled when working in dual ADC configuration, for the injected simultaneous mode and regular simultaneous mode. In this case, the two ADCs must be programmed with the very same settings (including oversampling).

All other dual ADC modes are not supported when either regular or injected oversampling is enabled (ROVSE = 1 or JOVSE = 1).

Combined modes summary

The *Table 67* below summarizes all combinations, including modes not supported.

Table 67. Oversampler operating modes summary

Regular Over-sampling ROVSE	Injected Over-sampling JOVSE	Oversampler mode ROVSM 0 = continued 1 = resumed	Triggered Regular mode TROVS	Comment
1	0	0	0	Regular continued mode
1	0	0	1	Not supported
1	0	1	0	Regular resumed mode
1	0	1	1	Triggered regular resumed mode
1	1	0	X	Not supported
1	1	1	0	Injected and regular resumed mode
1	1	1	1	Not supported
0	1	X	X	Injected oversampling

16.4.30 Dual ADC modes (on devices with 2 ADCs)

In devices with two ADCs or more, dual ADC modes can be used (see *Figure 90*):

- ADC1 and ADC2 can be used together in dual mode (ADC1 is master)

In dual ADC mode the start of conversion is triggered alternately or simultaneously by the ADCx master to the ADC slave, depending on the mode selected by the bits DUAL[4:0] in the ADCx_CCR register.

Four possible modes are implemented:

- Injected simultaneous mode
- Regular simultaneous mode
- Interleaved mode
- Alternate trigger mode

It is also possible to use these modes combined in the following ways:

- Injected simultaneous mode + Regular simultaneous mode
- Regular simultaneous mode + Alternate trigger mode
- Injected simultaneous mode + Interleaved mode

In dual ADC mode (when bits DUAL[4:0] in ADCx_CCR register are not equal to zero), the bits CONT, AUTDLY, DISCEN, DISCNUM[2:0], JDISCEN, JQM, JAUTO of the ADCx_CFGR register are shared between the master and slave ADC: the bits in the slave ADC are always equal to the corresponding bits of the master ADC.

To start a conversion in dual mode, the user must program the bits EXTEN, EXTSEL, JEXTEN, JEXTSEL of the master ADC only, to configure a software or hardware trigger, and a regular or injected trigger. (the bits EXTEN[1:0] and JEXTEN[1:0] of the slave ADC are don’t care).

In regular simultaneous or interleaved modes: once the user sets bit ADSTART or bit ADSTP of the master ADC, the corresponding bit of the slave ADC is also automatically set. However, bit ADSTART or bit ADSTP of the slave ADC is not necessary cleared at the same time as the master ADC bit.

In injected simultaneous or alternate trigger modes: once the user sets bit JADSTART or bit JADSTP of the master ADC, the corresponding bit of the slave ADC is also automatically set. However, bit JADSTART or bit JADSTP of the slave ADC is not necessary cleared at the same time as the master ADC bit.

In dual ADC mode, the converted data of the master and slave ADC can be read in parallel, by reading the ADC common data register (ADCx_CDR). The status bits can be also read in parallel by reading the dual-mode status register (ADCx_CSR).

Figure 90. Dual ADC block diagram(1)

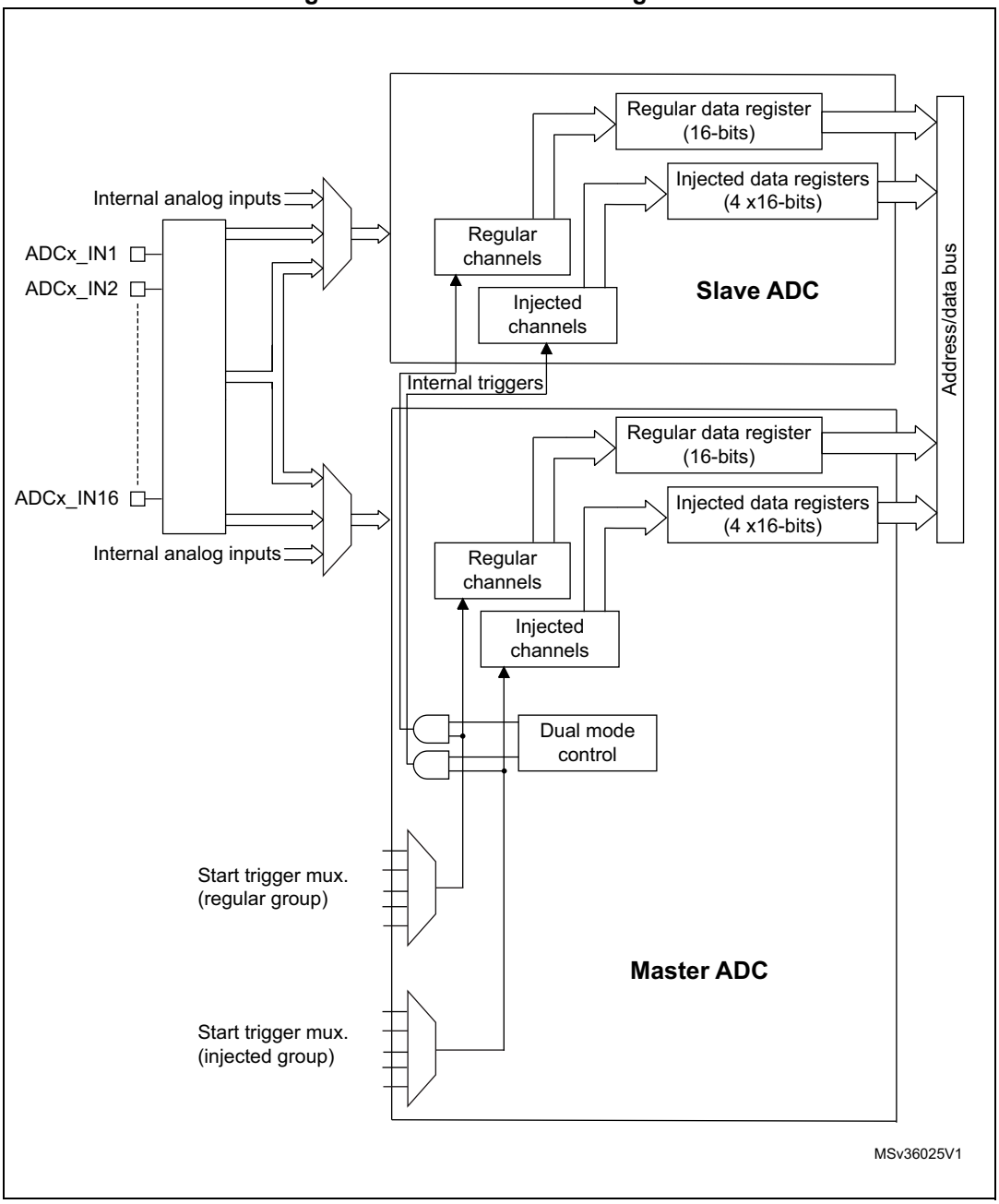

1. External triggers also exist on slave ADC but are not shown for the purposes of this diagram.
2. The ADC common data register (ADCx_CDR) contains both the master and slave ADC regular converted data.

Injected simultaneous mode

This mode is selected by programming bits DUAL[4:0]=00101

This mode converts an injected group of channels. The external trigger source comes from the injected group multiplexer of the master ADC (selected by the JEXTSEL[3:0] bits in the ADCx_JSQR register).

Note: Do not convert the same channel on the two ADCs (no overlapping sampling times for the two ADCs when converting the same channel).

In simultaneous mode, one must convert sequences with the same length or ensure that the interval between triggers is longer than the longer of the 2 sequences. Otherwise, the ADC with the shortest sequence may restart while the ADC with the longest sequence is completing the previous conversions.

Regular conversions can be performed on one or all ADCs. In that case, they are independent of each other and are interrupted when an injected event occurs. They are resumed at the end of the injected conversion group.

- At the end of injected sequence of conversion event (JEOS) on the master ADC, the converted data is stored into the master ADCx_JDRy registers and a JEOS interrupt is generated (if enabled)
- At the end of injected sequence of conversion event (JEOS) on the slave ADC, the converted data is stored into the slave ADCx_JDRy registers and a JEOS interrupt is generated (if enabled)
- If the duration of the master injected sequence is equal to the duration of the slave injected one (like in *Figure 91*), it is possible for the software to enable only one of the two JEOS interrupt (ex: master JEOS) and read both converted data (from master ADCx_JDRy and slave ADCx_JDRy registers).

Figure 91. Injected simultaneous mode on 4 channels: dual ADC mode

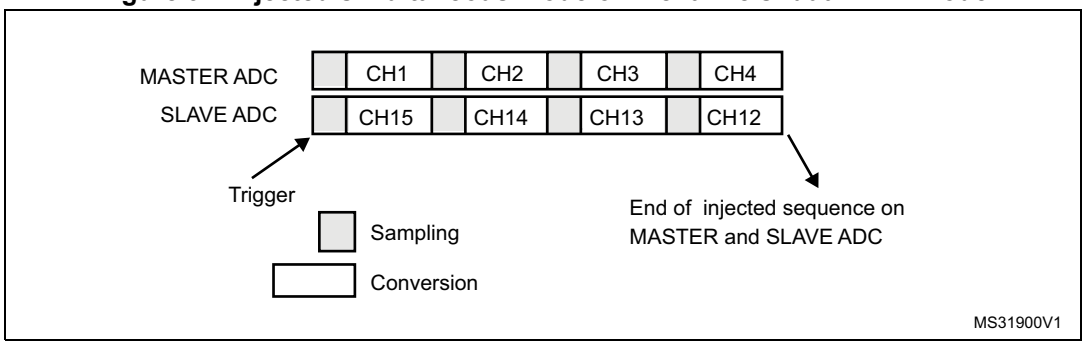

If JDISCEN=1, each simultaneous conversion of the injected sequence requires an injected trigger event to occur.

This mode can be combined with AUTDLY mode:

- Once a simultaneous injected sequence of conversions has ended, a new injected trigger event is accepted only if both JEOS bits of the master and the slave ADC have been cleared (delay phase). Any new injected trigger events occurring during the ongoing injected sequence and the associated delay phase are ignored.
- Once a regular sequence of conversions of the master ADC has ended, a new regular trigger event of the master ADC is accepted only if the master data register (ADCx_DR) has been read. Any new regular trigger events occurring for the master ADC during the

ongoing regular sequence and the associated delay phases are ignored.
There is the same behavior for regular sequences occurring on the slave ADC.

Regular simultaneous mode with independent injected

This mode is selected by programming bits DUAL[4:0] = 00110.

This mode is performed on a regular group of channels. The external trigger source comes from the regular group multiplexer of the master ADC (selected by the EXTSEL[3:0] bits in the ADCx_CFGR register). A simultaneous trigger is provided to the slave ADC.

In this mode, independent injected conversions are supported. An injection request (either on master or on the slave) will abort the current simultaneous conversions, which are re-started once the injected conversion is completed.

Note: Do not convert the same channel on the two ADCs (no overlapping sampling times for the two ADCs when converting the same channel).

In regular simultaneous mode, one must convert sequences with the same length or ensure that the interval between triggers is longer than the longer conversion time of the 2 sequences. Otherwise, the ADC with the shortest sequence may restart while the ADC with the longest sequence is completing the previous conversions.

Software is notified by interrupts when it can read the data:

- At the end of each conversion event (EOC) on the master ADC, a master EOC interrupt is generated (if EOCIE is enabled) and software can read the ADCx_DR of the master ADC.
- At the end of each conversion event (EOC) on the slave ADC, a slave EOC interrupt is generated (if EOCIE is enabled) and software can read the ADCx_DR of the slave ADC.
- If the duration of the master regular sequence is equal to the duration of the slave one (like in *Figure 92*), it is possible for the software to enable only one of the two EOC interrupt (ex: master EOC) and read both converted data from the Common Data register (ADCx_CDR).

It is also possible to read the regular data using the DMA. Two methods are possible:

- Using two DMA channels (one for the master and one for the slave). In this case bits MDMA[1:0] must be kept cleared.
  - Configure the DMA master ADC channel to read ADCx_DR from the master. DMA requests are generated at each EOC event of the master ADC.
  - Configure the DMA slave ADC channel to read ADCx_DR from the slave. DMA requests are generated at each EOC event of the slave ADC.
- Using MDMA mode, which leaves one DMA channel free for other uses:
  - Configure MDMA[1:0]=0b10 or 0b11 (depending on resolution).
  - A single DMA channel is used (the one of the master). Configure the DMA master ADC channel to read the common ADC register (ADCx_CDR)
  - A single DMA request is generated each time both master and slave EOC events have occurred. At that time, the slave ADC converted data is available in the upper half-word of the ADCx_CDR 32-bit register and the master ADC converted data is available in the lower half-word of ADCx_CCR register.
  - both EOC flags are cleared when the DMA reads the ADCx_CCR register.

Note: In MDMA mode (MDMA[1:0]=0b10 or 0b11), the user must program the same number of conversions in the master's sequence as in the slave's sequence. Otherwise, the remaining conversions will not generate a DMA request.

Figure 92. Regular simultaneous mode on 16 channels: dual ADC mode

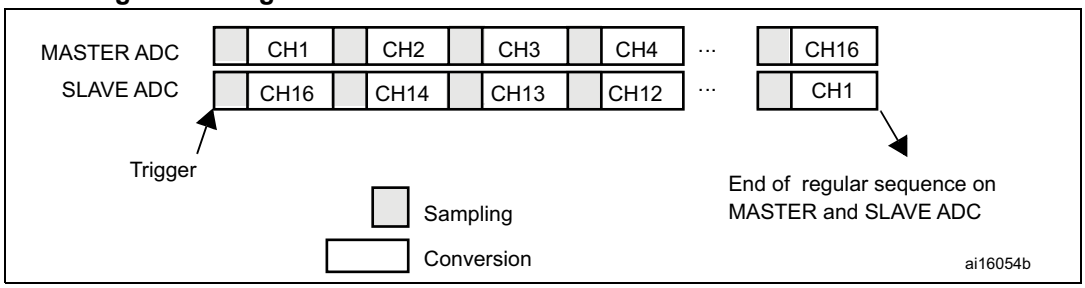

If DISCEN=1 then each "n" simultaneous conversions of the regular sequence require a regular trigger event to occur ("n" is defined by DISCNUM).

This mode can be combined with AUTDLY mode:

- Once a simultaneous conversion of the sequence has ended, the next conversion in the sequence is started only if the common data register, ADCx_CDR (or the regular data register of the master ADC) has been read (delay phase).
- Once a simultaneous regular sequence of conversions has ended, a new regular trigger event is accepted only if the common data register (ADCx_CDR) has been read (delay phase). Any new regular trigger events occurring during the ongoing regular sequence and the associated delay phases are ignored.

It is possible to use the DMA to handle data in regular simultaneous mode combined with AUTDLY mode, assuming that multi-DMA mode is used: bits MDMA must be set to 0b10 or 0b11.

When regular simultaneous mode is combined with AUTDLY mode, it is mandatory for the user to ensure that:

- The number of conversions in the master's sequence is equal to the number of conversions in the slave's.
- For each simultaneous conversions of the sequence, the length of the conversion of the slave ADC is inferior to the length of the conversion of the master ADC. Note that the length of the sequence depends on the number of channels to convert and the sampling time and the resolution of each channels.

Note: This combination of regular simultaneous mode and AUTDLY mode is restricted to the use case when only regular channels are programmed: it is forbidden to program injected channels in this combined mode.

Interleaved mode with independent injected

This mode is selected by programming bits DUAL[4:0] = 00111.

This mode can be started only on a regular group (usually one channel). The external trigger source comes from the regular channel multiplexer of the master ADC.

After an external trigger occurs:

- The master ADC starts immediately.
- The slave ADC starts after a delay of several-ADC clock cycles after the sampling phase of the master ADC has complete.

The minimum delay which separates 2 conversions in interleaved mode is configured in the DELAY bits in the ADCx_CCR register. This delay starts to count after the end of the sampling phase of the master conversion. This way, an ADC cannot start a conversion if the complementary ADC is still sampling its input (only one ADC can sample the input signal at a given time).

- The minimum possible DELAY is 1 to ensure that there is at least one cycle time between the opening of the analog switch of the master ADC sampling phase and the closing of the analog switch of the slave ADC sampling phase.
- The maximum DELAY is equal to the number of cycles corresponding to the selected resolution. However the user must properly calculate this delay to ensure that an ADC does not start a conversion while the other ADC is still sampling its input.

If the CONT bit is set on both master and slave ADCs, the selected regular channels of both ADCs are continuously converted.

Software is notified by interrupts when it can read the data:

- At the end of each conversion event (EOC) on the master ADC, a master EOC interrupt is generated (if EOCIE is enabled) and software can read the ADCx_DR of the master ADC.
- At the end of each conversion event (EOC) on the slave ADC, a slave EOC interrupt is generated (if EOCIE is enabled) and software can read the ADCx_DR of the slave ADC.

Note: It is possible to enable only the EOC interrupt of the slave and read the common data register (ADCx_CDR). But in this case, the user must ensure that the duration of the conversions are compatible to ensure that inside the sequence, a master conversion is always followed by a slave conversion before a new master conversion restarts.

It is also possible to have the regular data transferred by DMA. In this case, individual DMA requests on each ADC cannot be used and it is mandatory to use the MDMA mode, as following:

- Configure MDMA[1:0]=0b10 or 0b11 (depending on resolution).
- A single DMA channel is used (the one of the master). Configure the DMA master ADC channel to read the common ADC register (ADCx_CDR).
- A single DMA request is generated each time both master and slave EOC events have occurred. At that time, the slave ADC converted data is available in the upper half-word of the ADCx_CDR 32-bit register and the master ADC converted data is available in the lower half-word of ADCx_CCR register.
- Both EOC flags are cleared when the DMA reads the ADCx_CCR register.

Figure 93. Interleaved mode on 1 channel in continuous conversion mode: dual ADC mode

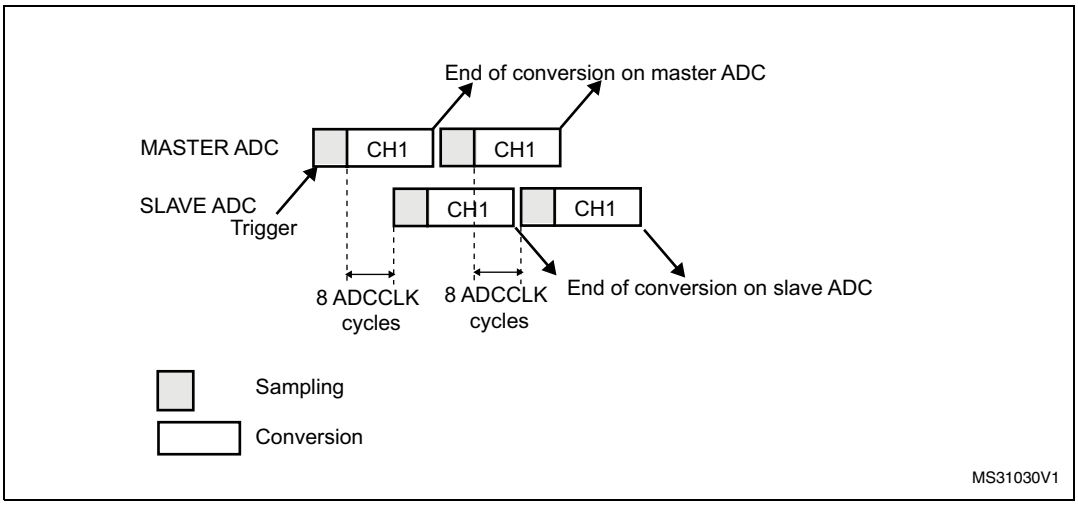

Figure 94. Interleaved mode on 1 channel in single conversion mode: dual ADC mode

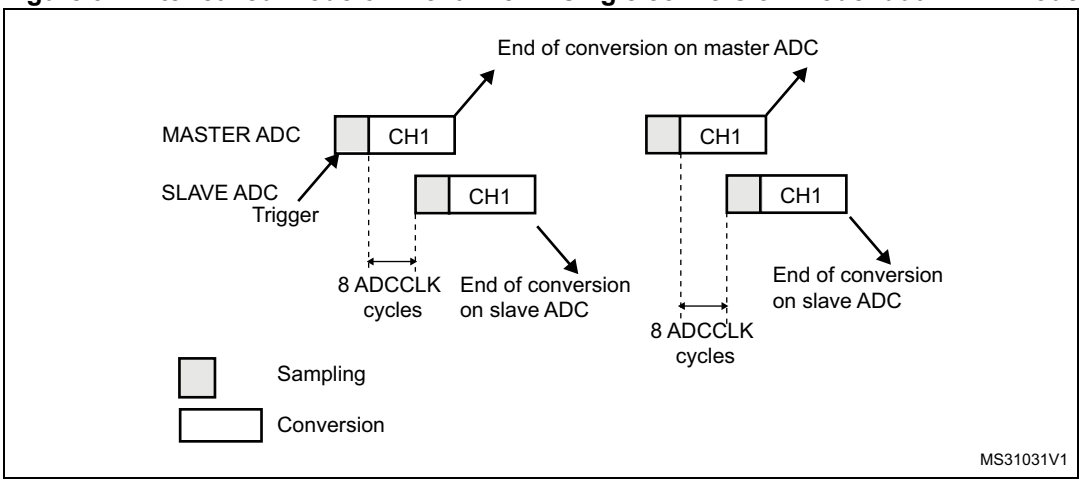

If DISCEN=1, each “n” simultaneous conversions (“n” is defined by DISCNUM) of the regular sequence require a regular trigger event to occur.

In this mode, injected conversions are supported. When injection is done (either on master or on slave), both the master and the slave regular conversions are aborted and the sequence is re-started from the master (see *Figure 95* below).

Figure 95. Interleaved conversion with injection

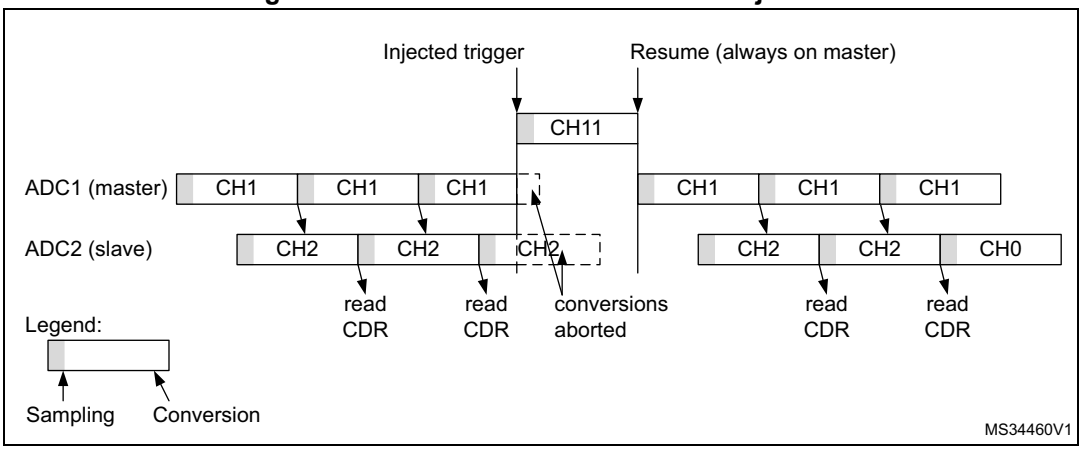

Alternate trigger mode

This mode is selected by programming bits DUAL[4:0] = 01001.

This mode can be started only on an injected group. The source of external trigger comes from the injected group multiplexer of the master ADC.

This mode is only possible when selecting hardware triggers: JEXTEN must not be 0x0.

Injected discontinuous mode disabled (JDISCEN=0 for both ADC)

1. When the 1st trigger occurs, all injected master ADC channels in the group are converted.
2. When the 2nd trigger occurs, all injected slave ADC channels in the group are converted.
3. And so on.

A JEOS interrupt, if enabled, is generated after all injected channels of the master ADC in the group have been converted.

A JEOS interrupt, if enabled, is generated after all injected channels of the slave ADC in the group have been converted.

JEOC interrupts, if enabled, can also be generated after each injected conversion.

If another external trigger occurs after all injected channels in the group have been converted then the alternate trigger process restarts by converting the injected channels of the master ADC in the group.

Figure 96. Alternate trigger: injected group of each ADC

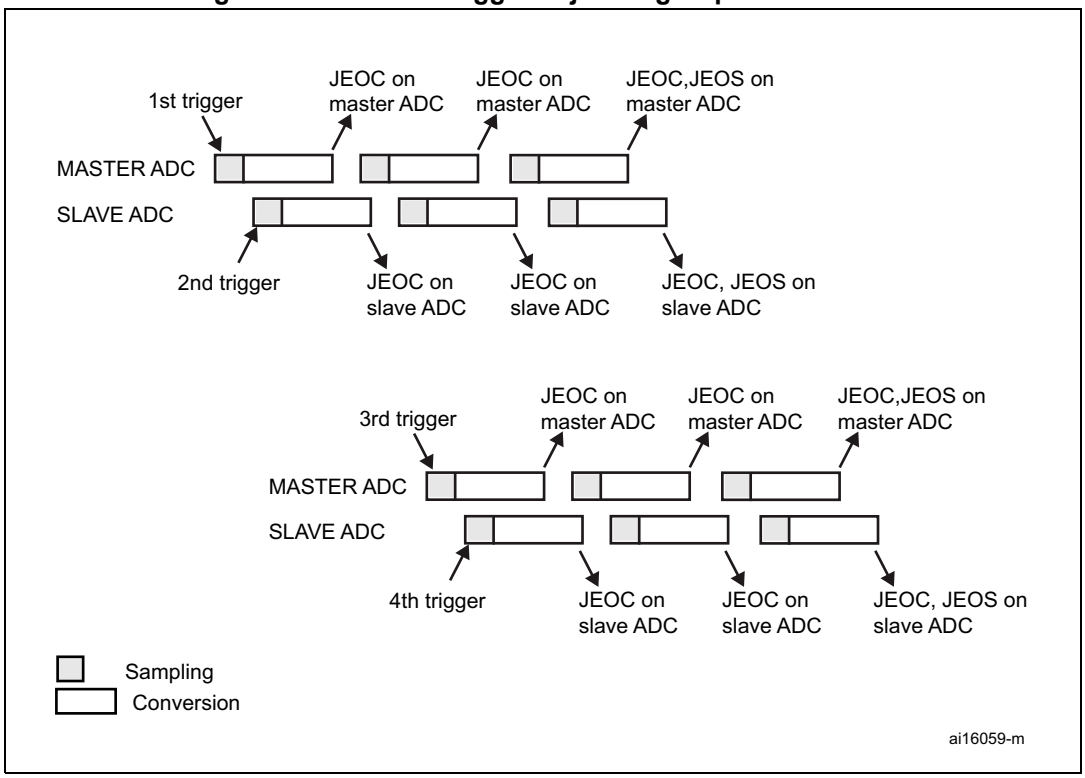

Note: Regular conversions can be enabled on one or all ADCs. In this case the regular conversions are independent of each other. A regular conversion is interrupted when the ADC has to perform an injected conversion. It is resumed when the injected conversion is finished.

The time interval between 2 trigger events must be greater than or equal to 1 ADC clock period. The minimum time interval between 2 trigger events that start conversions on the same ADC is the same as in the single ADC mode.

Injected discontinuous mode enabled (JDISCEN=1 for both ADC)

If the injected discontinuous mode is enabled for both master and slave ADCs:

- When the 1st trigger occurs, the first injected channel of the master ADC is converted.
- When the 2nd trigger occurs, the first injected channel of the slave ADC is converted.
- And so on.

A JEOS interrupt, if enabled, is generated after all injected channels of the master ADC in the group have been converted.

A JEOS interrupt, if enabled, is generated after all injected channels of the slave ADC in the group have been converted.

JEOC interrupts, if enabled, can also be generated after each injected conversions.

If another external trigger occurs after all injected channels in the group have been converted then the alternate trigger process restarts.

Figure 97. Alternate trigger: 4 injected channels (each ADC) in discontinuous mode

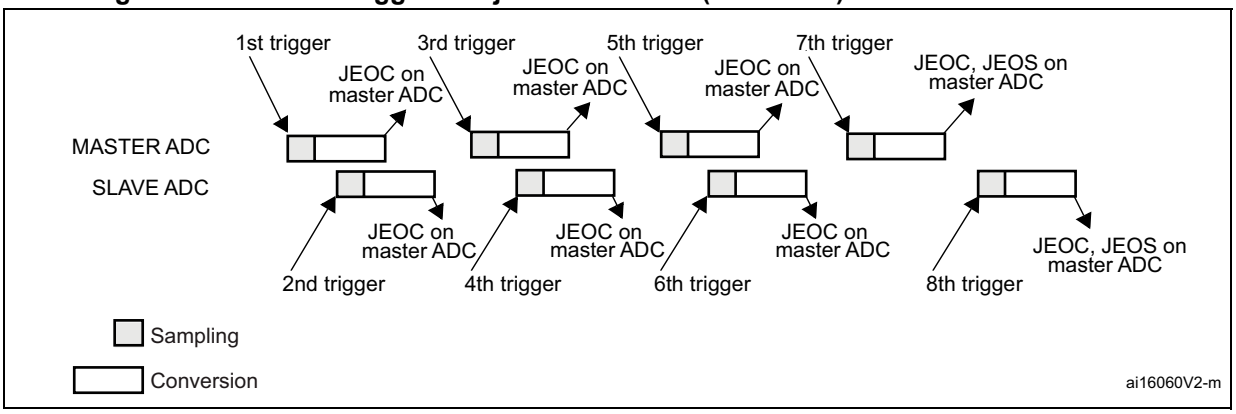

Combined regular/injected simultaneous mode

This mode is selected by programming bits DUAL[4:0] = 00001.

It is possible to interrupt the simultaneous conversion of a regular group to start the simultaneous conversion of an injected group.

Note: In combined regular/injected simultaneous mode, one must convert sequences with the same length or ensure that the interval between triggers is longer than the long conversion time of the 2 sequences. Otherwise, the ADC with the shortest sequence may restart while the ADC with the longest sequence is completing the previous conversions.

Combined regular simultaneous + alternate trigger mode

This mode is selected by programming bits DUAL[4:0]=00010.

It is possible to interrupt the simultaneous conversion of a regular group to start the alternate trigger conversion of an injected group. *Figure 98* shows the behavior of an alternate trigger interrupting a simultaneous regular conversion.

The injected alternate conversion is immediately started after the injected event. If a regular conversion is already running, in order to ensure synchronization after the injected conversion, the regular conversion of all (master/slave) ADCs is stopped and resumed synchronously at the end of the injected conversion.

Note: In combined regular simultaneous + alternate trigger mode, one must convert sequences with the same length or ensure that the interval between triggers is longer than the long conversion time of the 2 sequences. Otherwise, the ADC with the shortest sequence may restart while the ADC with the longest sequence is completing the previous conversions.

Figure 98. Alternate + regular simultaneous

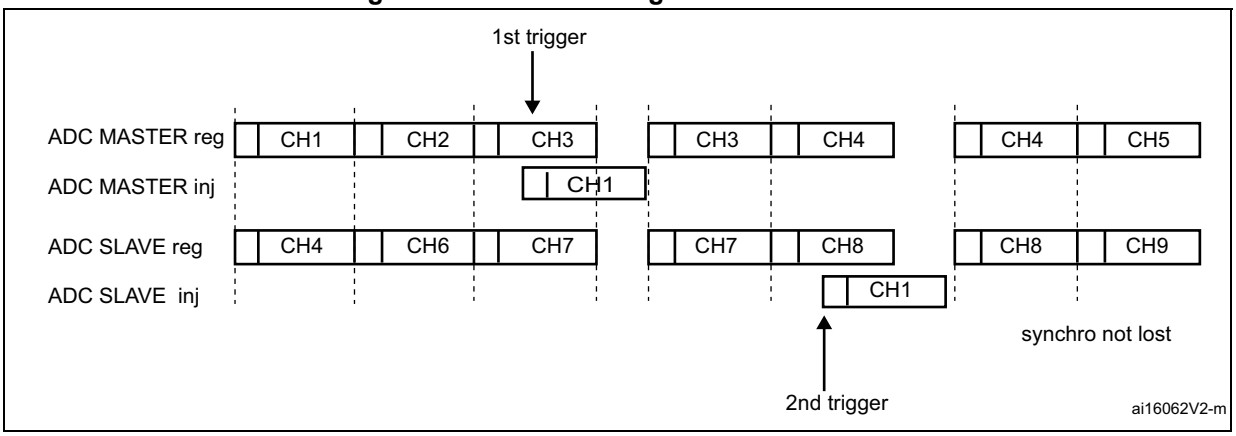

If a trigger occurs during an injected conversion that has interrupted a regular conversion, the alternate trigger is served. *Figure 99* shows the behavior in this case (note that the 6th trigger is ignored because the associated alternate conversion is not complete).

Figure 99. Case of trigger occurring during injected conversion

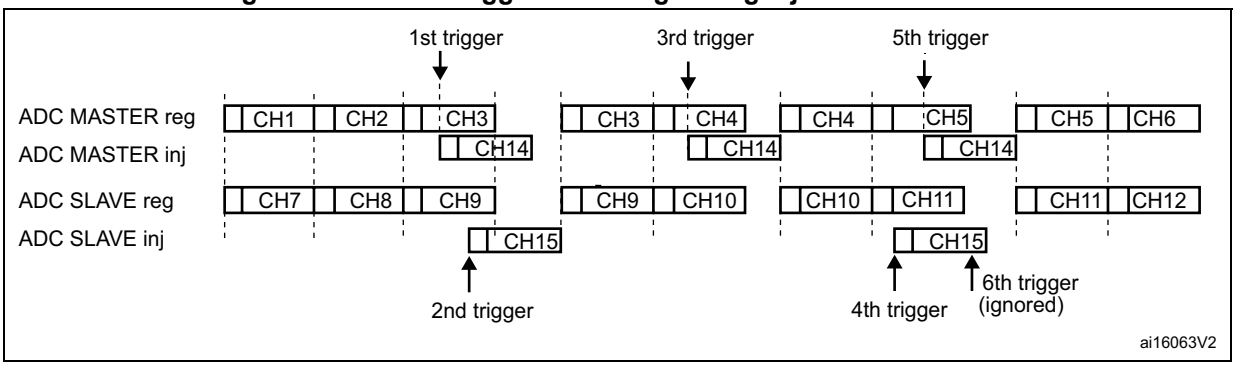

Combined injected simultaneous plus interleaved

This mode is selected by programming bits DUAL[4:0]=00011

It is possible to interrupt an interleaved conversion with a simultaneous injected event.

In this case the interleaved conversion is interrupted immediately and the simultaneous injected conversion starts. At the end of the injected sequence the interleaved conversion is resumed. When the interleaved regular conversion resumes, the first regular conversion which is performed is alway the master's one. *Figure 100*, *Figure 101* and *Figure 102* show the behavior using an example.

Caution: In this mode, it is mandatory to use the Common Data Register to read the regular data with a single read access. On the contrary, master-slave data coherency is not guaranteed.

Figure 100. Interleaved single channel CH0 with injected sequence CH11, CH12

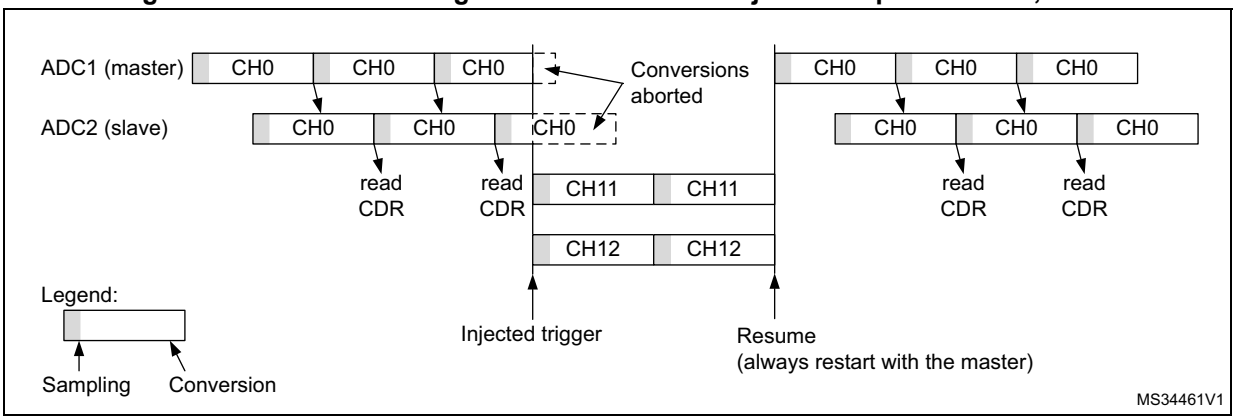

Figure 101. Two Interleaved channels (CH1, CH2) with injected sequence CH11, CH12 - case 1: Master interrupted first

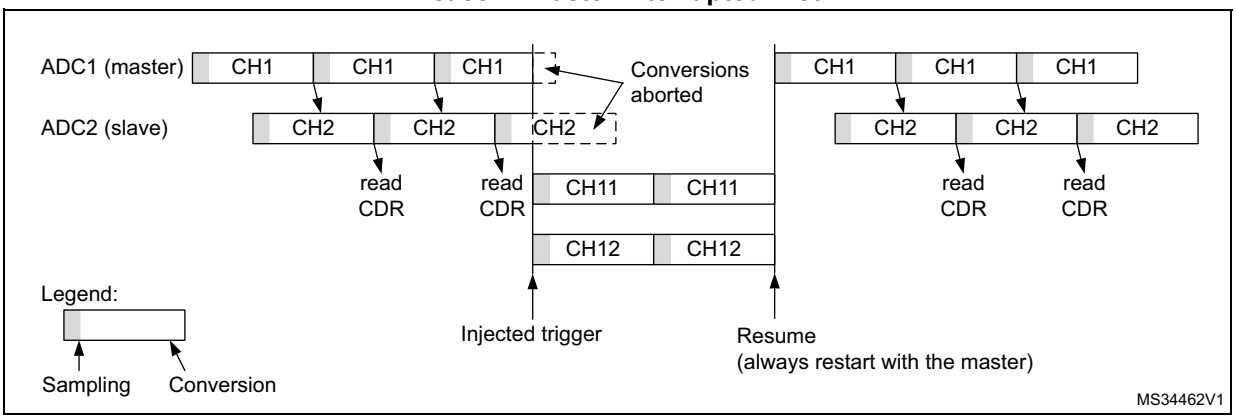

Figure 102. Two Interleaved channels (CH1, CH2) with injected sequence CH11, CH12 - case 2: Slave interrupted first

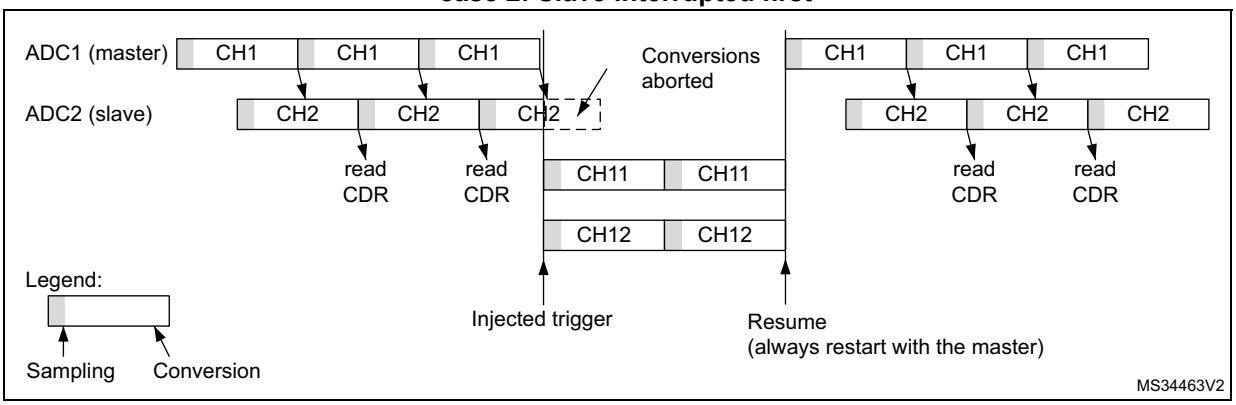

DMA requests in dual ADC mode

In all dual ADC modes, it is possible to use two DMA channels (one for the master, one for the slave) to transfer the data, like in single mode (refer to *Figure 103: DMA Requests in*

regular simultaneous mode when MDMA=0b00).

Figure 103. DMA Requests in regular simultaneous mode when MDMA=0b00

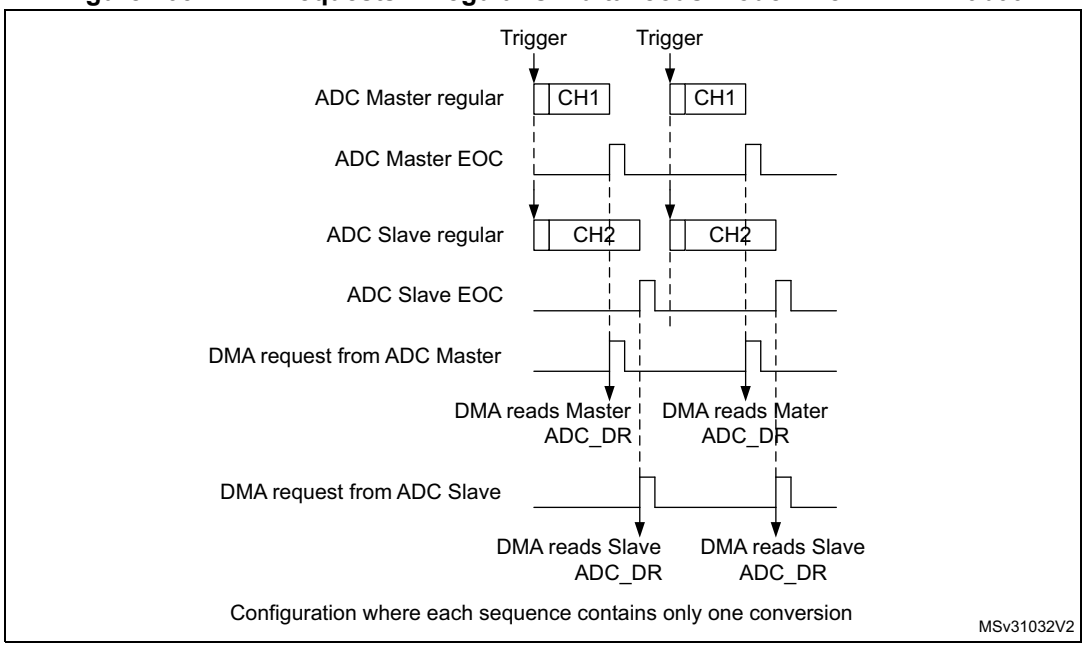

In simultaneous regular and interleaved modes, it is also possible to save one DMA channel and transfer both data using a single DMA channel. For this MDMA bits must be configured in the ADCx_CCR register:

- **MDMA=0b10**: A single DMA request is generated each time both master and slave EOC events have occurred. At that time, two data items are available and the 32-bit register ADCx_CDR contains the two half-words representing two ADC-converted data items. The slave ADC data take the upper half-word and the master ADC data take the lower half-word.
  This mode is used in interleaved mode and in regular simultaneous mode when resolution is 10-bit or 12-bit.

  Example:

  Interleaved dual mode: a DMA request is generated each time 2 data items are available:

  1st DMA request: ADCx_CDR[31:0] = SLV_ADCx_DR[15:0] | MST_ADCx_DR[15:0]

  2nd DMA request: ADCx_CDR[31:0] = SLV_ADCx_DR[15:0] | MST_ADCx_DR[15:0]

Figure 104. DMA requests in regular simultaneous mode when MDMA=0b10

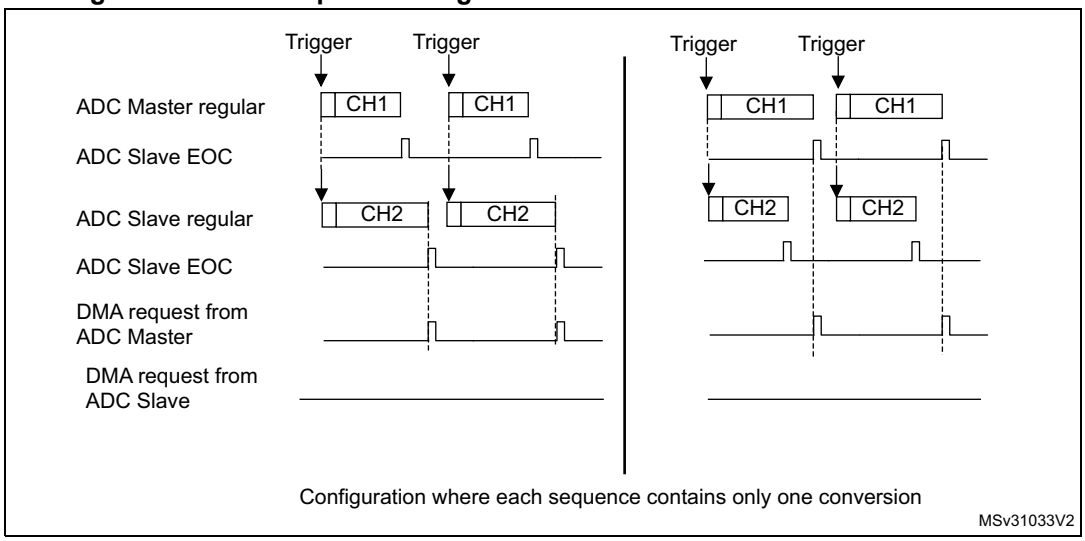

Figure 105. DMA requests in interleaved mode when MDMA=0b10

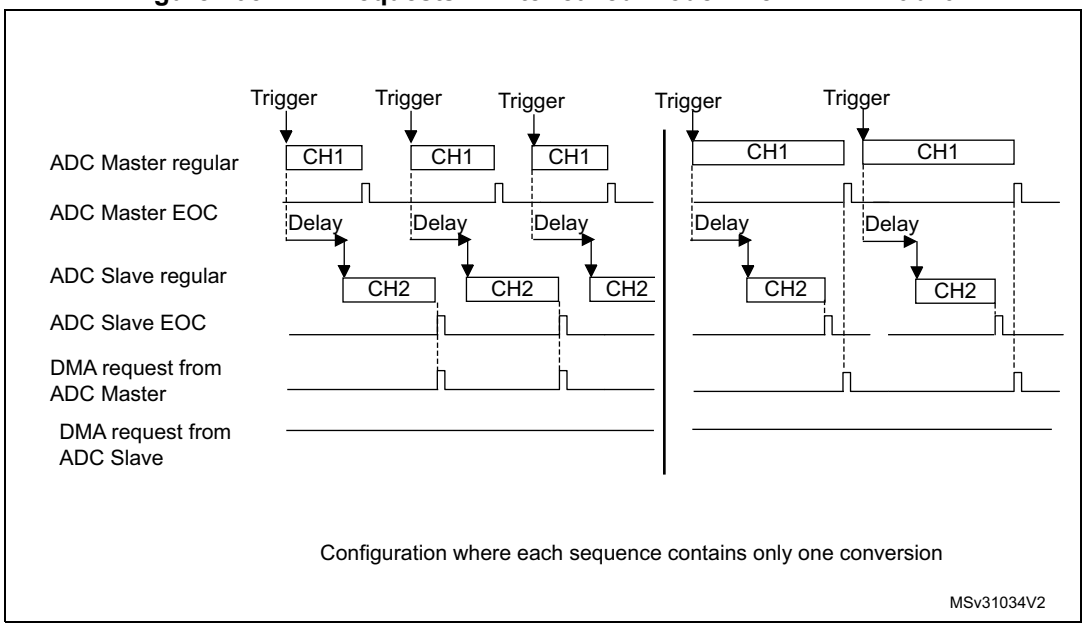

Note: When using MDMA mode, the user must take care to configure properly the duration of the master and slave conversions so that a DMA request is generated and served for reading both data (master + slave) before a new conversion is available.

- **MDMA=0b11**: This mode is similar to the MDMA=0b10. The only differences are that on each DMA request (two data items are available), two bytes representing two ADC converted data items are transferred as a half-word.

  This mode is used in interleaved and regular simultaneous mode when resolution is 6-bit or when resolution is 8-bit and data is not signed (offsets must be disabled for all the involved channels).

  Example:

  Interleaved dual mode: a DMA request is generated each time 2 data items are available:

  1st DMA request: ADCx_CDR[15:0] = SLV_ADCx_DR[7:0] | MST_ADCx_DR[7:0]

  2nd DMA request: ADCx_CDR[15:0] = SLV_ADCx_DR[7:0] | MST_ADCx_DR[7:0]

Overrun detection

In dual ADC mode (when DUAL[4:0] is not equal to b00000), if an overrun is detected on one of the ADCs, the DMA requests are no longer issued to ensure that all the data transferred to the RAM are valid (this behavior occurs whatever the MDMA configuration). It may happen that the EOC bit corresponding to one ADC remains set because the data register of this ADC contains valid data.

DMA one shot mode/ DMA circular mode when MDMA mode is selected

When MDMA mode is selected (0b10 or 0b11), bit DMACFG of the ADCx_CCR register must also be configured to select between DMA one shot mode and circular mode, as explained in section *Section : Managing conversions using the DMA* (bits DMACFG of master and slave ADCx_CFGR are not relevant).

Stopping the conversions in dual ADC modes

The user must set the control bits ADSTP/JADSTP of the master ADC to stop the conversions of both ADC in dual ADC mode. The other ADSTP control bit of the slave ADC has no effect in dual ADC mode.

Once both ADC are effectively stopped, the bits ADSTART/JADSTART of the master and slave ADCs are both cleared by hardware.

16.4.31 Temperature sensor

The temperature sensor can be used to measure the junction temperature (Tj) of the device. The temperature sensor is internally connected to the ADC1_IN17 input channels which are used to convert the sensor output voltage to a digital value. When not in use, the sensor can be put in power down mode.

Figure 106 shows the block diagram of connections between the temperature sensor and the ADC.

The temperature sensor output voltage changes linearly with temperature. The offset of this line varies from chip to chip due to process variation (up to 45 °C from one chip to another).

The uncalibrated internal temperature sensor is more suited for applications that detect temperature variations instead of absolute temperatures. To improve the accuracy of the

temperature sensor measurement, calibration values are stored in system memory for each device by ST during production.

During the manufacturing process, the calibration data of the temperature sensor and the internal voltage reference are stored in the system memory area. The user application can then read them and use them to improve the accuracy of the temperature sensor or the internal reference. Refer to the STM32L431/433/443 datasheet for additional information.

Main features

- Supported temperature range: –40 to 125 °C
- Precision: ±2 °C

The temperature sensor is internally connected to the ADC1_IN17 input channel which is used to convert the sensor's output voltage to a digital value. Refer to the electrical characteristics section of the device datasheet for the sampling time value to be applied when converting the internal temperature sensor.

When not in use, the sensor can be put in power-down mode.

Figure 106 shows the block diagram of the temperature sensor. For single ADC devices, the DAC1_int signal and the temperature sensor share the same input.

Figure 106. Temperature sensor channel block diagram (devices with 2 ADCs)

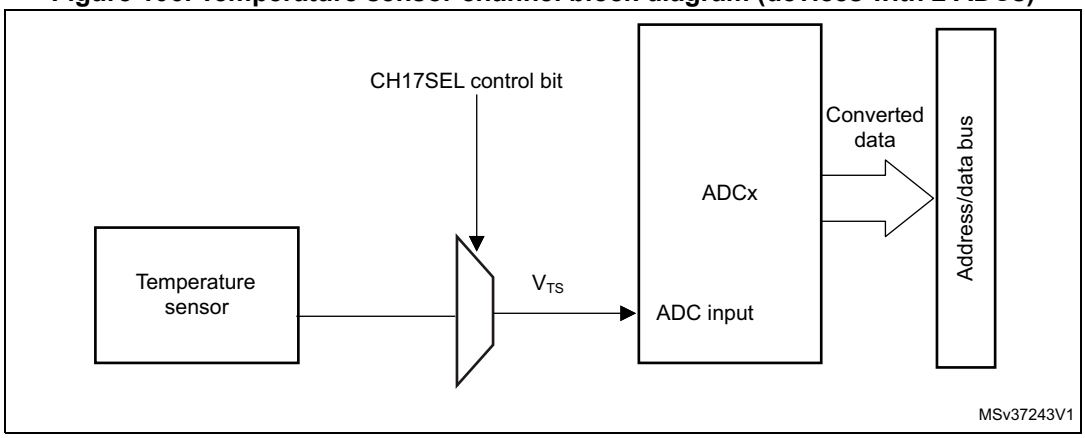

Note: The CH17SEL bit must be set to enable the conversion of the temperature sensor voltage V_{TS}.

Figure 107. Temperature sensor channel block diagram (devices with single ADC)

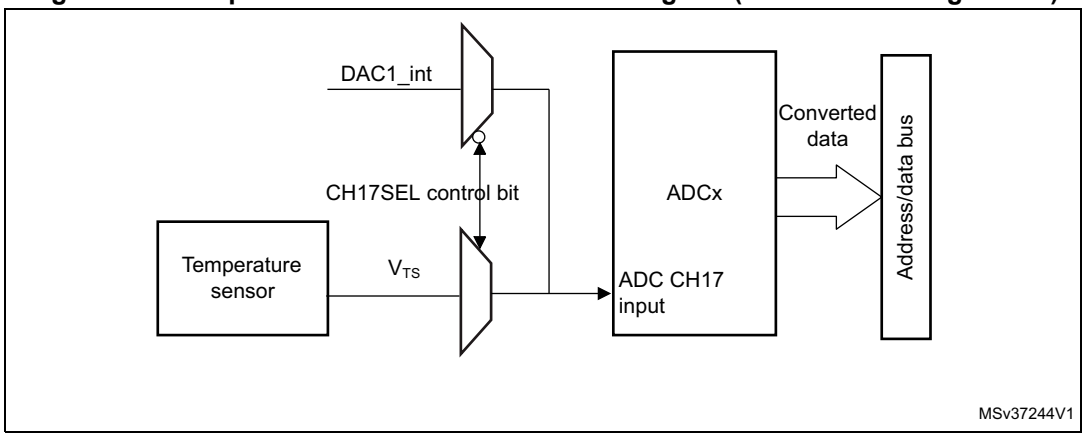

Note: The CH17SEL bit must be set to enable the conversion of the temperature sensor voltage V_{TS}

Reading the temperature

To use the sensor:

1. Select the ADC1_IN17 input channels (with the appropriate sampling time).
2. Program with the appropriate sampling time (refer to electrical characteristics section of the device datasheet).
3. Set the CH17SEL bit in the ADCx_CCR register to wake up the temperature sensor from power-down mode.
4. Start the ADC conversion.
5. Read the resulting V_{TS} data in the ADC data register.
6. Calculate the actual temperature using the following formula:

$$\text{Temperature (in °C)} = \frac{110\ °C - 30\ °C}{TS_CAL2 - TS_CAL1} \times (TS_DATA - TS_CAL1) + 30\ °C$$

Where:

- TS_CAL2 is the temperature sensor calibration value acquired at 110°C
- TS_CAL1 is the temperature sensor calibration value acquired at 30°C
- TS_DATA is the actual temperature sensor output value converted by ADC

  Refer to the device datasheet for more information about TS_CAL1 and TS_CAL2 calibration points.

Note: The sensor has a startup time after waking from power-down mode before it can output V_{TS} at the correct level. The ADC also has a startup time after power-on, so to minimize the delay, the ADEN and CH17SEL bits should be set at the same time.

16.4.32 V_{BAT} supply monitoring

The CH18SEL bit in the ADCx_CCR register is used to switch to the battery voltage. As the V_{BAT} voltage could be higher than V_{DDA}, to ensure the correct operation of the ADC, the V_{BAT} pin is internally connected to a bridge divider by 3. This bridge is automatically enabled when CH18_SEL is set, to connect $V_{BAT}/3$ to the ADC1_IN18 input channels. As a consequence, the converted digital value is one third of the V_{BAT} voltage. To prevent any

unwanted consumption on the battery, it is recommended to enable the bridge divider only when needed, for ADC conversion.

Refer to the electrical characteristics of the device datasheet for the sampling time value to be applied when converting the $V_{BAT}/3$ voltage.

Figure 108 shows the block diagram of the V_{BAT} sensing feature. For single ADC devices, the DAC2_int signal and V_{BAT} sensing input share the same input.

Figure 108. V_{BAT} channel block diagram (devices with 2 ADCs)

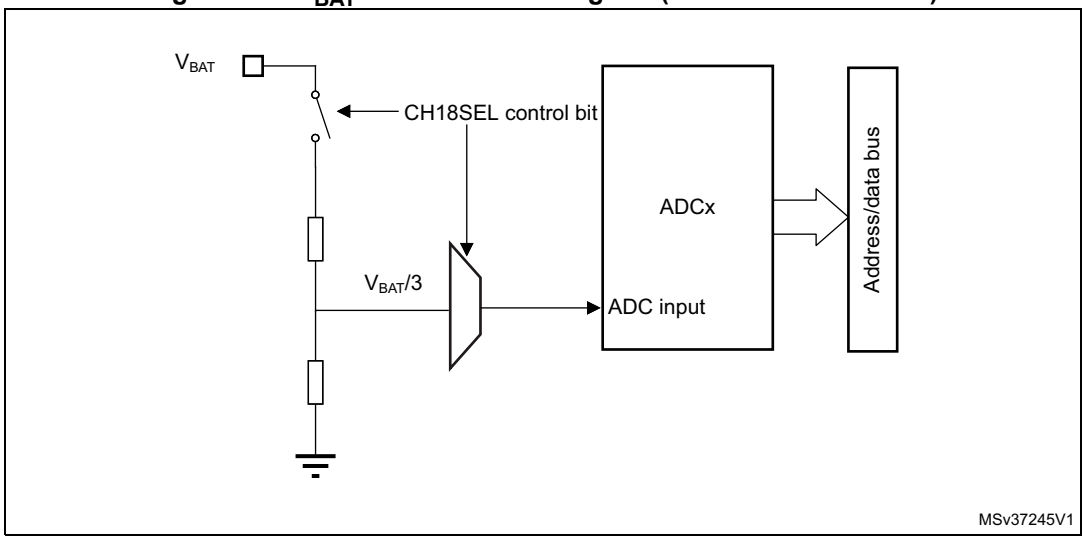

Note: The CH18_SEL bit must be set to enable the conversion of internal channels ADC1_IN18 ($V_{BAT}/3$).

Figure 109. V_{BAT} channel block diagram (devices with single ADC)

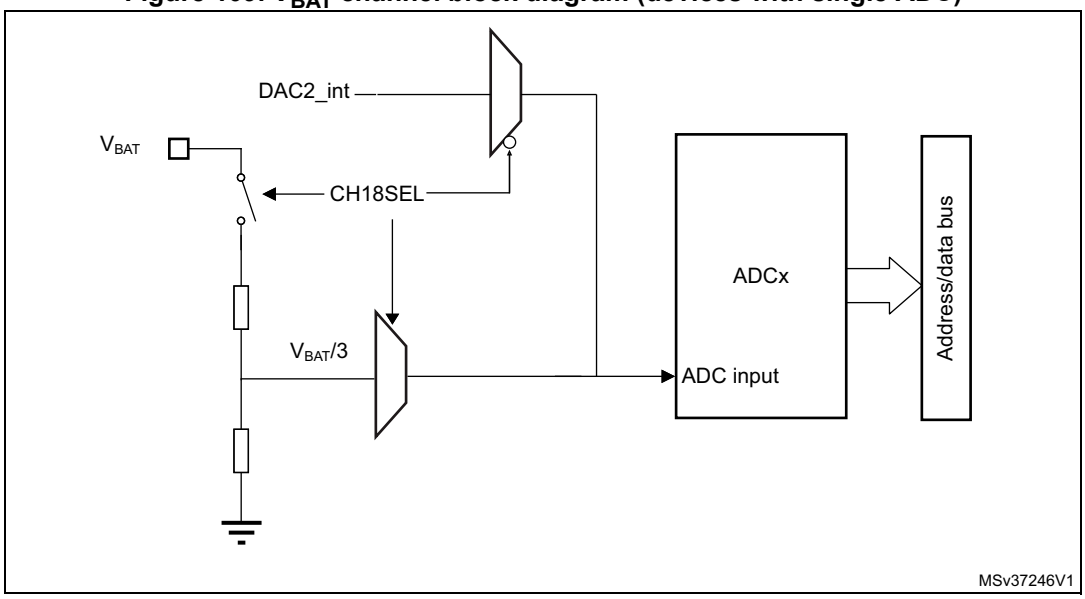

Note: The CH18_SEL bit must be set to enable the conversion of internal channels ADC1_IN18 ($V_{BAT}/3$).

16.4.33 Monitoring the internal voltage reference

It is possible to monitor the internal voltage reference (V_{REFINT}) to have a reference point for evaluating the ADC V_{REF+} voltage level.

The internal voltage reference is internally connected to the input channel 0 of the ADC1 (ADC1_IN0).

Refer to the electrical characteristics section of the STM32L431/433/443 datasheet for the sampling time value to be applied when converting the internal voltage reference voltage.

Figure 108 shows the block diagram of the V_{REFINT} sensing feature.

Figure 110. V_{REFINT} channel block diagram

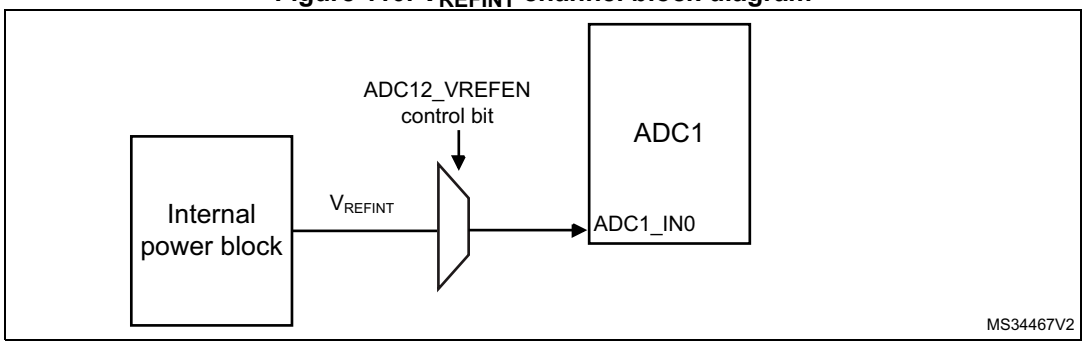

Note: The VREFEN bit into ADCx_CCR register must be set to enable the conversion of internal channels ADC1_IN0 (V_{REFINT}).

Calculating the actual V_{DDA} voltage using the internal reference voltage

The V_{DDA} power supply voltage applied to the microcontroller may be subject to variation or not precisely known. The embedded internal voltage reference (V_{REFINT}) and its calibration data acquired by the ADC during the manufacturing process at V_{DDA} = 3.3 V can be used to evaluate the actual V_{DDA} voltage level.

The following formula gives the actual V_{DDA} voltage supplying the device:

$$V_{DDA} = 3.0\ V \times VREFINT_CAL / VREFINT_DATA$$

Where:

- VREFINT_CAL is the VREFINT calibration value
- VREFINT_DATA is the actual VREFINT output value converted by ADC

Converting a supply-relative ADC measurement to an absolute voltage value

The ADC is designed to deliver a digital value corresponding to the ratio between the analog power supply and the voltage applied on the converted channel. For most application use cases, it is necessary to convert this ratio into a voltage independent of V_{DDA}. For applications where V_{DDA} is known and ADC converted values are right-aligned you can use the following formula to get this absolute value:

$$V_{CHANNELx} = \frac{V_{DDA}}{FULL_SCALE} \times ADCx_DATA$$

For applications where V_{DDA} value is not known, you must use the internal voltage reference and V_{DDA} can be replaced by the expression provided in *Section : Calculating the*

actual VDDA voltage using the internal reference voltage, resulting in the following formula:

$$V_{CHANNELx} = \frac{3.0\ V \times VREFINT_CAL \times ADCx_DATA}{VREFINT_DATA \times FULL_SCALE}$$

Where:

- VREFINT_CAL is the VREFINT calibration value
- ADCx_DATA is the value measured by the ADC on channel x (right-aligned)
- VREFINT_DATA is the actual VREFINT output value converted by the ADC
- FULL_SCALE is the maximum digital value of the ADC output. For example with 12-bit resolution, it will be 2^{12} - 1 = 4095 or with 8-bit resolution, 2^8 - 1 = 255.

Note: If ADC measurements are done using an output format other than 12 bit right-aligned, all the parameters must first be converted to a compatible format before the calculation is done.

16.5 ADC interrupts

For each ADC, an interrupt can be generated:

- After ADC power-up, when the ADC is ready (flag ADRDY)
- On the end of any conversion for regular groups (flag EOC)
- On the end of a sequence of conversion for regular groups (flag EOS)
- On the end of any conversion for injected groups (flag JEOC)
- On the end of a sequence of conversion for injected groups (flag JEOS)
- When an analog watchdog detection occurs (flag AWD1, AWD2 and AWD3)
- When the end of sampling phase occurs (flag EOSMP)
- When the data overrun occurs (flag OVR)
- When the injected sequence context queue overflows (flag JQOVF)

Separate interrupt enable bits are available for flexibility.

Table 68. ADC interrupts per each ADC

Interrupt event	Event flag	Enable control bit
ADC ready	ADRDY	ADRDYIE
End of conversion of a regular group	EOC	EOCIE
End of sequence of conversions of a regular group	EOS	EOSIE
End of conversion of a injected group	JEOC	JEOCIE
End of sequence of conversions of an injected group	JEOS	JEOSIE
Analog watchdog 1 status bit is set	AWD1	AWD1IE
Analog watchdog 2 status bit is set	AWD2	AWD2IE
Analog watchdog 3 status bit is set	AWD3	AWD3IE
End of sampling phase	EOSMP	EOSMPIE
Overrun	OVR	OVRIE
Injected context queue overflows	JQOVF	JQOVFIE

16.6 ADC registers (for each ADC)

Refer to *Section 1.1 on page 55* for a list of abbreviations used in register descriptions.

16.6.1 ADC interrupt and status register (ADCx_ISR)

Address offset: 0x00

Reset value: 0x0000 0000

31	30	29	28	27	26	25	24	23	22	21	20	19	18	17	16
Res.	Res.	Res.	Res.	Res.	Res.	Res.	Res.	Res.	Res.	Res.	Res.	Res.	Res.	Res.	Res.
15	14	13	12	11	10	9	8	7	6	5	4	3	2	1	0
Res.	Res.	Res.	Res.	Res.	JQOVF	AWD3	AWD2	AWD1	JEOS	JEOC	OVR	EOS	EOC	EOSMP	ADRDY
					r_w1	r_w1	r_w1	r_w1	r_w1	r_w1	r_w1	r_w1	rc_w1	r_w1	r_w1

Bits 31:11 Reserved, must be kept at reset value.

Bit 10 **JQOVF**: Injected context queue overflow

This bit is set by hardware when an Overflow of the Injected Queue of Context occurs. It is cleared by software writing 1 to it. Refer to *Section 16.4.21: Queue of context for injected conversions* for more information.

0: No injected context queue overflow occurred (or the flag event was already acknowledged and cleared by software)

1: Injected context queue overflow has occurred

Bit 9 **AWD3**: Analog watchdog 3 flag

This bit is set by hardware when the converted voltage crosses the values programmed in the fields LT3[7:0] and HT3[7:0] of ADCx_TR3 register. It is cleared by software writing 1 to it.

0: No analog watchdog 3 event occurred (or the flag event was already acknowledged and cleared by software)

1: Analog watchdog 3 event occurred

Bit 8 **AWD2**: Analog watchdog 2 flag

This bit is set by hardware when the converted voltage crosses the values programmed in the fields LT2[7:0] and HT2[7:0] of ADCx_TR2 register. It is cleared by software writing 1 to it.

0: No analog watchdog 2 event occurred (or the flag event was already acknowledged and cleared by software)

1: Analog watchdog 2 event occurred

Bit 7 **AWD1**: Analog watchdog 1 flag

This bit is set by hardware when the converted voltage crosses the values programmed in the fields LT1[11:0] and HT1[11:0] of ADCx_TR1 register. It is cleared by software. writing 1 to it.

0: No analog watchdog 1 event occurred (or the flag event was already acknowledged and cleared by software)

1: Analog watchdog 1 event occurred

Bit 6 **JEOS:** Injected channel end of sequence flag

This bit is set by hardware at the end of the conversions of all injected channels in the group. It is cleared by software writing 1 to it.

0: Injected conversion sequence not complete (or the flag event was already acknowledged and cleared by software)

1: Injected conversions complete

Bit 5 **JEOC:** Injected channel end of conversion flag

This bit is set by hardware at the end of each injected conversion of a channel when a new data is available in the corresponding ADCx_JDRy register. It is cleared by software writing 1 to it or by reading the corresponding ADCx_JDRy register

0: Injected channel conversion not complete (or the flag event was already acknowledged and cleared by software)

1: Injected channel conversion complete

Bit 4 **OVR**: ADC overrun

This bit is set by hardware when an overrun occurs on a regular channel, meaning that a new conversion has completed while the EOC flag was already set. It is cleared by software writing 1 to it.

0: No overrun occurred (or the flag event was already acknowledged and cleared by software)

1: Overrun has occurred

Bit 3 **EOS**: End of regular sequence flag

This bit is set by hardware at the end of the conversions of a regular sequence of channels. It is cleared by software writing 1 to it.

0: Regular Conversions sequence not complete (or the flag event was already acknowledged and cleared by software)

1: Regular Conversions sequence complete

Bit 2 **EOC**: End of conversion flag

This bit is set by hardware at the end of each regular conversion of a channel when a new data is available in the ADCx_DR register. It is cleared by software writing 1 to it or by reading the ADCx_DR register

0: Regular channel conversion not complete (or the flag event was already acknowledged and cleared by software)

1: Regular channel conversion complete

Bit 1 **EOSMP**: End of sampling flag

This bit is set by hardware during the conversion of any channel (only for regular channels), at the end of the sampling phase.

0: not at the end of the sampling phase (or the flag event was already acknowledged and cleared by software)

1: End of sampling phase reached

Bit 0 **ADRDY**: ADC ready

This bit is set by hardware after the ADC has been enabled (bit ADEN=1) and when the ADC reaches a state where it is ready to accept conversion requests.

It is cleared by software writing 1 to it.

0: ADC not yet ready to start conversion (or the flag event was already acknowledged and cleared by software)

1: ADC is ready to start conversion

16.6.2 ADC interrupt enable register (ADCx_IER)

Address offset: 0x04

Reset value: 0x0000 0000

31	30	29	28	27	26	25	24	23	22	21	20	19	18	17	16
Res.	Res.	Res.	Res.	Res.	Res.	Res.	Res.	Res.	Res.	Res.	Res.	Res.	Res.	Res.	Res.
15	14	13	12	11	10	9	8	7	6	5	4	3	2	1	0
Res.	Res.	Res.	Res.	Res.	JQ OVFIE	AWD3 IE	AWD2 IE	AWD1 IE	JEOSIE	JEOCIE	OVRIE	EOSIE	EOCIE	EOSMP IE	ADRDY IE
					rw	rw	rw	rw	rw	rw	rw	rw	rw	rw	rw

Bits 31:11 Reserved, must be kept at reset value.

Bit 10 **JQOVFIE**: Injected context queue overflow interrupt enable

This bit is set and cleared by software to enable/disable the Injected Context Queue Overflow interrupt.

0: Injected Context Queue Overflow interrupt disabled

1: Injected Context Queue Overflow interrupt enabled. An interrupt is generated when the JQOVF bit is set.

Note: Software is allowed to write this bit only when JADSTART=0 (which ensures that no injected conversion is ongoing).

Bit 9 **AWD3IE**: Analog watchdog 3 interrupt enable

This bit is set and cleared by software to enable/disable the analog watchdog 2 interrupt.

0: Analog watchdog 3 interrupt disabled

1: Analog watchdog 3 interrupt enabled

Note: Software is allowed to write this bit only when ADSTART=0 and JADSTART=0 (which ensures that no conversion is ongoing).

Bit 8 **AWD2IE**: Analog watchdog 2 interrupt enable

This bit is set and cleared by software to enable/disable the analog watchdog 2 interrupt.

0: Analog watchdog 2 interrupt disabled

1: Analog watchdog 2 interrupt enabled

Note: Software is allowed to write this bit only when ADSTART=0 and JADSTART=0 (which ensures that no conversion is ongoing).

Bit 7 **AWD1IE**: Analog watchdog 1 interrupt enable

This bit is set and cleared by software to enable/disable the analog watchdog 1 interrupt.

0: Analog watchdog 1 interrupt disabled

1: Analog watchdog 1 interrupt enabled

Note: Software is allowed to write this bit only when ADSTART=0 and JADSTART=0 (which ensures that no conversion is ongoing).

Bit 6 **JEOSIE**: End of injected sequence of conversions interrupt enable

This bit is set and cleared by software to enable/disable the end of injected sequence of conversions interrupt.

0: JEOS interrupt disabled

1: JEOS interrupt enabled. An interrupt is generated when the JEOS bit is set.

Note: Software is allowed to write this bit only when JADSTART=0 (which ensures that no injected conversion is ongoing).

Bit 5 **JEOCIE**: End of injected conversion interrupt enable

This bit is set and cleared by software to enable/disable the end of an injected conversion interrupt.
0: JEOC interrupt disabled.
1: JEOC interrupt enabled. An interrupt is generated when the JEOC bit is set.

Note: Software is allowed to write this bit only when JADSTART=0 (which ensures that no regular conversion is ongoing).

Bit 4 **OVRIE**: Overrun interrupt enable

This bit is set and cleared by software to enable/disable the Overrun interrupt of a regular conversion.
0: Overrun interrupt disabled
1: Overrun interrupt enabled. An interrupt is generated when the OVR bit is set.

Note: Software is allowed to write this bit only when ADSTART=0 (which ensures that no regular conversion is ongoing).

Bit 3 **EOSIE**: End of regular sequence of conversions interrupt enable

This bit is set and cleared by software to enable/disable the end of regular sequence of conversions interrupt.
0: EOS interrupt disabled
1: EOS interrupt enabled. An interrupt is generated when the EOS bit is set.

Note: Software is allowed to write this bit only when ADSTART=0 (which ensures that no regular conversion is ongoing).

Bit 2 **EOCIE**: End of regular conversion interrupt enable

This bit is set and cleared by software to enable/disable the end of a regular conversion interrupt.
0: EOC interrupt disabled.
1: EOC interrupt enabled. An interrupt is generated when the EOC bit is set.

Note: Software is allowed to write this bit only when ADSTART=0 (which ensures that no regular conversion is ongoing).

Bit 1 **EOSMPIE**: End of sampling flag interrupt enable for regular conversions

This bit is set and cleared by software to enable/disable the end of the sampling phase interrupt for regular conversions.
0: EOSMP interrupt disabled.
1: EOSMP interrupt enabled. An interrupt is generated when the EOSMP bit is set.

Note: Software is allowed to write this bit only when ADSTART=0 (which ensures that no regular conversion is ongoing).

Bit 0 **ADRDYIE**: ADC ready interrupt enable

This bit is set and cleared by software to enable/disable the ADC Ready interrupt.
0: ADRDY interrupt disabled
1: ADRDY interrupt enabled. An interrupt is generated when the ADRDY bit is set.

Note: Software is allowed to write this bit only when ADSTART=0 and JADSTART=0 (which ensures that no conversion is ongoing).

16.6.3 ADC control register (ADCx_CR)

Address offset: 0x08

Reset value: 0x2000 0000

31	30	29	28	27	26	25	24	23	22	21	20	19	18	17	16
AD CAL	ADCA LDIF	DEEP PWD	ADVREG EN	Res.	Res.	Res.	Res.	Res.	Res.	Res.	Res.	Res.	Res.	Res.	Res.
rs	rw	rw	rw												

15	14	13	12	11	10	9	8	7	6	5	4	3	2	1	0
Res.	Res.	Res.	Res.	Res.	Res.	Res.	Res.	Res.	Res.	JAD STP	AD STP	JAD START	AD START	AD DIS	AD EN
										rs	rs	rs	rs	rs	rs

Bit 31 **ADCAL**: ADC calibration

This bit is set by software to start the calibration of the ADC. Program first the bit ADCALDIF to determine if this calibration applies for single-ended or differential inputs mode.

It is cleared by hardware after calibration is complete.

0: Calibration complete

1: Write 1 to calibrate the ADC. Read at 1 means that a calibration in progress.

Note: Software is allowed to launch a calibration by setting ADCAL only when ADEN=0.

Note: Software is allowed to update the calibration factor by writing ADCx_CALFACT only when ADEN=1 and ADSTART=0 and JADSTART=0 (ADC enabled and no conversion is ongoing)

Bit 30 **ADCALDIF**: Differential mode for calibration

This bit is set and cleared by software to configure the single-ended or differential inputs mode for the calibration.

0: Writing ADCAL will launch a calibration in Single-ended inputs Mode.

1: Writing ADCAL will launch a calibration in Differential inputs Mode.

Note: Software is allowed to write this bit only when the ADC is disabled and is not calibrating (ADCAL=0, JADSTART=0, JADSTP=0, ADSTART=0, ADSTP=0, ADDIS=0 and ADEN=0).

Bit 29 **DEEPPWD**: Deep-power-down enable

This bit is set and cleared by software to put the ADC in deep-power-down mode.

0: ADC not in deep-power down

1: ADC in deep-power-down (default reset state)

Note: Software is allowed to write this bit only when the ADC is disabled (ADCAL=0, JADSTART=0, JADSTP=0, ADSTART=0, ADSTP=0, ADDIS=0 and ADEN=0).

Bit 28 **ADVREGEN**: ADC voltage regulator enable

This bits is set by software to enable the ADC voltage regulator.

Before performing any operation such as launching a calibration or enabling the ADC, the ADC voltage regulator must first be enabled and the software must wait for the regulator start-up time.

0: ADC Voltage regulator disabled

1: ADC Voltage regulator enabled.

For more details about the ADC voltage regulator enable and disable sequences, refer to *Section 16.4.6: ADC Deep-Power-Down Mode (DEEPPWD) & ADC Voltage Regulator (ADVREGEN)*.

The software can program this bit field only when the ADC is disabled (ADCAL=0, JADSTART=0, ADSTART=0, ADSTP=0, ADDIS=0 and ADEN=0).

Bits 27:6 Reserved, must be kept at reset value.

Bit 5 **JADSTP**: ADC stop of injected conversion command

This bit is set by software to stop and discard an ongoing injected conversion (JADSTP Command). It is cleared by hardware when the conversion is effectively discarded and the ADC injected sequence and triggers can be re-configured. The ADC is then ready to accept a new start of injected conversions (JADSTART command).

0: No ADC stop injected conversion command ongoing

1: Write 1 to stop injected conversions ongoing. Read 1 means that an ADSTP command is in progress.

Note: Software is allowed to set JADSTP only when JADSTART=1 and ADDIS=0 (ADC is enabled and eventually converting an injected conversion and there is no pending request to disable the ADC)

In auto-injection mode (JAUTO=1), setting ADSTP bit aborts both regular and injected conversions (do not use JADSTP)

Bit 4 **ADSTP**: ADC stop of regular conversion command

This bit is set by software to stop and discard an ongoing regular conversion (ADSTP Command). It is cleared by hardware when the conversion is effectively discarded and the ADC regular sequence and triggers can be re-configured. The ADC is then ready to accept a new start of regular conversions (ADSTART command).

0: No ADC stop regular conversion command ongoing

1: Write 1 to stop regular conversions ongoing. Read 1 means that an ADSTP command is in progress.

Note: Software is allowed to set ADSTP only when ADSTART=1 and ADDIS=0 (ADC is enabled and eventually converting a regular conversion and there is no pending request to disable the ADC).

In auto-injection mode (JAUTO=1), setting ADSTP bit aborts both regular and injected conversions (do not use JADSTP).

In dual ADC regular simultaneous mode and interleaved mode, the bit ADSTP of the master ADC must be used to stop regular conversions. The other ADSTP bit is inactive.

Bit 3 **JADSTART**: ADC start of injected conversion

This bit is set by software to start ADC conversion of injected channels. Depending on the configuration bits JEXTEN, a conversion will start immediately (software trigger configuration) or once an injected hardware trigger event occurs (hardware trigger configuration).

It is cleared by hardware:

– in single conversion mode when software trigger is selected (JEXTSEL=0x0): at the assertion of the End of Injected Conversion Sequence (JEOS) flag.

– in all cases: after the execution of the JADSTP command, at the same time that JADSTP is cleared by hardware.

0: No ADC injected conversion is ongoing.

1: Write 1 to start injected conversions. Read 1 means that the ADC is operating and eventually converting an injected channel.

Note: Software is allowed to set JADSTART only when ADEN=1 and ADDIS=0 (ADC is enabled and there is no pending request to disable the ADC).

In auto-injection mode (JAUTO=1), regular and auto-injected conversions are started by setting bit ADSTART (JADSTART must be kept cleared)

Bit 2 **ADSTART**: ADC start of regular conversion

This bit is set by software to start ADC conversion of regular channels. Depending on the configuration bits EXTEN, a conversion will start immediately (software trigger configuration) or once a regular hardware trigger event occurs (hardware trigger configuration).

It is cleared by hardware:

– in single conversion mode when software trigger is selected (EXTSEL=0x0): at the assertion of the End of Regular Conversion Sequence (EOS) flag.

– in all cases: after the execution of the ADSTP command, at the same time that ADSTP is cleared by hardware.

0: No ADC regular conversion is ongoing.

1: Write 1 to start regular conversions. Read 1 means that the ADC is operating and eventually converting a regular channel.

Note: Software is allowed to set ADSTART only when ADEN=1 and ADDIS=0 (ADC is enabled and there is no pending request to disable the ADC)

In auto-injection mode (JAUTO=1), regular and auto-injected conversions are started by setting bit ADSTART (JADSTART must be kept cleared)

Bit 1 **ADDIS**: ADC disable command

This bit is set by software to disable the ADC (ADDIS command) and put it into power-down state (OFF state).

It is cleared by hardware once the ADC is effectively disabled (ADEN is also cleared by hardware at this time).

0: no ADDIS command ongoing

1: Write 1 to disable the ADC. Read 1 means that an ADDIS command is in progress.

Note: Software is allowed to set ADDIS only when ADEN=1 and both ADSTART=0 and JADSTART=0 (which ensures that no conversion is ongoing)

Bit 0 **ADEN**: ADC enable control

This bit is set by software to enable the ADC. The ADC will be effectively ready to operate once the flag ADRDY has been set.

It is cleared by hardware when the ADC is disabled, after the execution of the ADDIS command.

0: ADC is disabled (OFF state)

1: Write 1 to enable the ADC.

Note: Software is allowed to set ADEN only when all bits of ADCx_CR registers are 0 (ADCAL=0, JADSTART=0, ADSTART=0, ADSTP=0, ADDIS=0 and ADEN=0) except for bit ADVREGEN which must be 1 (and the software must have wait for the startup time of the voltage regulator)

16.6.4 ADC configuration register (ADCx_CFGR)

Address offset: 0x0C

Reset value: 0x8000 0000

31	30	29	28	27	26	25	24	23	22	21	20	19	18	17	16
JQDIS	AWD1CH[4:0]					JAUTO	JAWD1 EN	AWD1 EN	AWD1S GL	JQM	JDISC EN	DISCNUM[2:0]			DISC EN
rw	rw	rw	rw	rw	rw	rw	rw	rw	rw	rw	rw	rw	rw	rw	rw
15	14	13	12	11	10	9	8	7	6	5	4	3	2	1	0
Res.	AUT DLY	CONT	OVR MOD	EXTEN[1:0]		EXTSEL[3:0]				ALIGN	RES[1:0]		Res.	DMA CFG	DMA EN
	rw	rw	rw	rw	rw	rw	rw	rw	rw	rw	rw	rw		rw	rw

Bit 31 **JQDIS**: Injected Queue disable

These bits are set and cleared by software to disable the Injected Queue mechanism :

0: Injected Queue enabled

1: Injected Queue disabled

Note: Software is allowed to write this bit only when ADSTART=0 and JADSTART=0 (which ensures that no regular nor injected conversion is ongoing).

A set or reset of JQDIS bit causes the injected queue to be flushed and the JSQR register is cleared.

Bits 30:26 **AWD1CH[4:0]**: Analog watchdog 1 channel selection

These bits are set and cleared by software. They select the input channel to be guarded by the analog watchdog.

00000: ADC analog input channel-0 monitored by AWD1 (available on ADC1 only)

00001: ADC analog input channel-1 monitored by AWD1

.....

10010: ADC analog input channel-18 monitored by AWD1

others: reserved, must not be used

Note: The channel selected by AWD1CH must be also selected into the SQRi or JSQRi registers.

Software is allowed to write these bits only when ADSTART=0 and JADSTART=0 (which ensures that no conversion is ongoing).

Bit 25 **JAUTO:** Automatic injected group conversion

This bit is set and cleared by software to enable/disable automatic injected group conversion after regular group conversion.

0: Automatic injected group conversion disabled

1: Automatic injected group conversion enabled

Note: Software is allowed to write this bit only when ADSTART=0 and JADSTART=0 (which ensures that no regular nor injected conversion is ongoing).

When dual mode is enabled (DUAL bits in ADCx_CCR register are not equal to zero), the bit JAUTO of the slave ADC is no more writable and its content is equal to the bit JAUTO of the master ADC.

Bit 24 **JAWD1EN**: Analog watchdog 1 enable on injected channels

This bit is set and cleared by software

0: Analog watchdog 1 disabled on injected channels

1: Analog watchdog 1 enabled on injected channels

Note: Software is allowed to write this bit only when JADSTART=0 (which ensures that no injected conversion is ongoing).

Bit 23 **AWD1EN**: Analog watchdog 1 enable on regular channels

This bit is set and cleared by software

0: Analog watchdog 1 disabled on regular channels

1: Analog watchdog 1 enabled on regular channels

Note: Software is allowed to write this bit only when ADSTART=0 (which ensures that no regular conversion is ongoing).

Bit 22 **AWD1SGL**: Enable the watchdog 1 on a single channel or on all channels

This bit is set and cleared by software to enable the analog watchdog on the channel identified by the AWD1CH[4:0] bits or on all the channels

0: Analog watchdog 1 enabled on all channels

1: Analog watchdog 1 enabled on a single channel

Note: Software is allowed to write these bits only when ADSTART=0 and JADSTART=0 (which ensures that no conversion is ongoing).

Bit 21 **JQM**: JSQR queue mode

This bit is set and cleared by software.

It defines how an empty Queue is managed.

0: JSQR Mode 0: The Queue is never empty and maintains the last written configuration into JSQR.

1: JSQR Mode 1: The Queue can be empty and when this occurs, the software and hardware triggers of the injected sequence are both internally disabled just after the completion of the last valid injected sequence.

Refer to *Section 16.4.21: Queue of context for injected conversions* for more information.

Note: Software is allowed to write this bit only when JADSTART=0 (which ensures that no injected conversion is ongoing).

When dual mode is enabled (DUAL bits in ADCx_CCR register are not equal to zero), the bit JQM of the slave ADC is no more writable and its content is equal to the bit JQM of the master ADC.

Bit 20 **JDISCEN:** Discontinuous mode on injected channels

This bit is set and cleared by software to enable/disable discontinuous mode on the injected channels of a group.

0: Discontinuous mode on injected channels disabled

1: Discontinuous mode on injected channels enabled

Note: Software is allowed to write this bit only when JADSTART=0 (which ensures that no injected conversion is ongoing).

It is not possible to use both auto-injected mode and discontinuous mode simultaneously: the bits DISCEN and JDISCEN must be kept cleared by software when JAUTO is set.

When dual mode is enabled (bits DUAL of ADCx_CCR register are not equal to zero), the bit JDISCEN of the slave ADC is no more writable and its content is equal to the bit JDISCEN of the master ADC.

Bits 19:17 **DISCNUM[2:0]:** Discontinuous mode channel count

These bits are written by software to define the number of regular channels to be converted in discontinuous mode, after receiving an external trigger.

000: 1 channel

001: 2 channels

...

111: 8 channels

Note: Software is allowed to write these bits only when ADSTART=0 (which ensures that no regular conversion is ongoing).

When dual mode is enabled (DUAL bits in ADCx_CCR register are not equal to zero), the bits DISCNUM[2:0] of the slave ADC are no more writable and their content is equal to the bits DISCNUM[2:0] of the master ADC.

Bit 16 **DISCEN**: Discontinuous mode for regular channels

This bit is set and cleared by software to enable/disable Discontinuous mode for regular channels.

0: Discontinuous mode for regular channels disabled

1: Discontinuous mode for regular channels enabled

Note: It is not possible to have both discontinuous mode and continuous mode enabled: it is forbidden to set both DISCEN=1 and CONT=1.

It is not possible to use both auto-injected mode and discontinuous mode simultaneously: the bits DISCEN and JDISCEN must be kept cleared by software when JAUTO is set.

Software is allowed to write this bit only when ADSTART=0 (which ensures that no regular conversion is ongoing).

When dual mode is enabled (DUAL bits in ADCx_CCR register are not equal to zero), the bit DISCEN of the slave ADC is no more writable and its content is equal to the bit DISCEN of the master ADC.

Bit 15 Reserved, must be kept at reset value.

Bit 14 **AUTDLY**: Delayed conversion mode

This bit is set and cleared by software to enable/disable the Auto Delayed Conversion mode.

0: Auto-delayed conversion mode off

1: Auto-delayed conversion mode on

Note: Software is allowed to write this bit only when ADSTART=0 and JADSTART=0 (which ensures that no conversion is ongoing).

When dual mode is enabled (DUAL bits in ADCx_CCR register are not equal to zero), the bit AUTDLY of the slave ADC is no more writable and its content is equal to the bit AUTDLY of the master ADC.

Bit 13 **CONT**: Single / continuous conversion mode for regular conversions

This bit is set and cleared by software. If it is set, regular conversion takes place continuously until it is cleared.

0: Single conversion mode

1: Continuous conversion mode

Note: It is not possible to have both discontinuous mode and continuous mode enabled: it is forbidden to set both DISCEN=1 and CONT=1.

Software is allowed to write this bit only when ADSTART=0 (which ensures that no regular conversion is ongoing).

When dual mode is enabled (DUAL bits in ADCx_CCR register are not equal to zero), the bit CONT of the slave ADC is no more writable and its content is equal to the bit CONT of the master ADC.

Bit 12 **OVRMOD**: Overrun Mode

This bit is set and cleared by software and configure the way data overrun is managed.

0: ADCx_DR register is preserved with the old data when an overrun is detected.

1: ADCx_DR register is overwritten with the last conversion result when an overrun is detected.

Note: Software is allowed to write this bit only when ADSTART=0 (which ensures that no regular conversion is ongoing).

Bits 11:10 **EXTEN[1:0]**: External trigger enable and polarity selection for regular channels

These bits are set and cleared by software to select the external trigger polarity and enable the trigger of a regular group.

00: Hardware trigger detection disabled (conversions can be launched by software)

01: Hardware trigger detection on the rising edge

10: Hardware trigger detection on the falling edge

11: Hardware trigger detection on both the rising and falling edges

Note: Software is allowed to write these bits only when ADSTART=0 (which ensures that no regular conversion is ongoing).

Bits 9:6 **EXTSEL[3:0]**: External trigger selection for regular group

These bits select the external event used to trigger the start of conversion of a regular group:

0000: Event 0
0001: Event 1
0010: Event 2
0011: Event 3
0100: Event 4
0101: Event 5
0110: Event 6
0111: Event 7
...
1111: Event 15

Note: Software is allowed to write these bits only when ADSTART=0 (which ensures that no regular conversion is ongoing).

Bit 5 **ALIGN**: Data alignment

This bit is set and cleared by software to select right or left alignment. Refer to *Section : Data register, data alignment and offset (ADCx_DR, OFFSETy, OFFSETy_CH, ALIGN)*

0: Right alignment
1: Left alignment

Note: Software is allowed to write this bit only when ADSTART=0 and JADSTART=0 (which ensures that no conversion is ongoing).

Bits 4:3 **RES[1:0]**: Data resolution

These bits are written by software to select the resolution of the conversion.

00: 12-bit
01: 10-bit
10: 8-bit
11: 6-bit

Note: Software is allowed to write these bits only when ADSTART=0 and JADSTART=0 (which ensures that no conversion is ongoing).

Bit 2 Reserved, must be kept at reset value.

Bit 1 **DMACFG**: Direct memory access configuration

This bit is set and cleared by software to select between two DMA modes of operation and is effective only when DMAEN=1.

0: DMA One Shot Mode selected
1: DMA Circular Mode selected

For more details, refer to *Section : Managing conversions using the DMA*

Note: Software is allowed to write this bit only when ADSTART=0 and JADSTART=0 (which ensures that no conversion is ongoing).

In dual-ADC modes, this bit is not relevant and replaced by control bit DMACFG of the ADCx_CCR register.

Bit 0 **DMAEN**: Direct memory access enable

This bit is set and cleared by software to enable the generation of DMA requests. This allows to use the GP-DMA to manage automatically the converted data. For more details, refer to *Section : Managing conversions using the DMA*.

0: DMA disabled
1: DMA enabled

Note: Software is allowed to write this bit only when ADSTART=0 and JADSTART=0 (which ensures that no conversion is ongoing).

In dual-ADC modes, this bit is not relevant and replaced by control bits MDMA[1:0] of the ADCx_CCR register.

16.6.5 ADC configuration register 2 (ADCx_CFGR2)

Address offset: 0x10

Reset value: 0x0000 0000

31	30	29	28	27	26	25	24	23	22	21	20	19	18	17	16
Res.	Res.	Res.	Res.	Res.	Res.	Res.	Res.	Res.	Res.	Res.	Res.	Res.	Res.	Res.	Res.

15	14	13	12	11	10	9	8	7	6	5	4	3	2	1	0
Res.	Res.	Res.	Res.	Res.	ROVSM	TROVS	OVSS[3:0]				OVSR[2:0]			JOVSE	ROVSE
					rw	rw	rw	rw	rw	rw	rw	rw	rw	rw	rw

Bits 31:11 Reserved, must be kept at reset value.

Bit 10 **ROVSM**: Regular Oversampling mode

This bit is set and cleared by software to select the regular oversampling mode.

0: Continued mode: When injected conversions are triggered, the oversampling is temporary stopped and continued after the injection sequence (oversampling buffer is maintained during injected sequence)

1: Resumed mode: When injected conversions are triggered, the current oversampling is aborted and resumed from start after the injection sequence (oversampling buffer is zeroed by injected sequence start)

Note: Software is allowed to write this bit only when ADSTART=0 (which ensures that no conversion is ongoing).

Bit 9 **TROVS**: Triggered Regular Oversampling

This bit is set and cleared by software to enable triggered oversampling

0: All oversampled conversions for a channel are done consecutively following a trigger

1: Each oversampled conversion for a channel needs a new trigger

Note: Software is allowed to write this bit only when ADSTART=0 (which ensures that no conversion is ongoing).

Bits 8:5 **OVSS[3:0]**: Oversampling shift

This bitfield is set and cleared by software to define the right shifting applied to the raw oversampling result.

0000: No shift
0001: Shift 1-bit
0010: Shift 2-bits
0011: Shift 3-bits
0100: Shift 4-bits
0101: Shift 5-bits
0110: Shift 6-bits
0111: Shift 7-bits
1000: Shift 8-bits
Other codes reserved

Note: Software is allowed to write these bits only when ADSTART=0 (which ensures that no conversion is ongoing).

Bits 4:2 **OVSR[2:0]**: Oversampling ratio

This bitfield is set and cleared by software to define the oversampling ratio.

000: 2x
001: 4x
010: 8x
011: 16x
100: 32x
101: 64x
110: 128x
111: 256x

Note: Software is allowed to write these bits only when ADSTART=0 (which ensures that no conversion is ongoing).

Bit 1 **JOVSE**: Injected Oversampling Enable

This bit is set and cleared by software to enable injected oversampling.

0: Injected Oversampling disabled
1: Injected Oversampling enabled

Note: Software is allowed to write this bit only when ADSTART=0 and JADSTART=0 (which ensures that no conversion is ongoing)

Bit 0 **ROVSE**: Regular Oversampling Enable

This bit is set and cleared by software to enable regular oversampling.

0: Regular Oversampling disabled
1: Regular Oversampling enabled

Note: Software is allowed to write this bit only when ADSTART=0 and JADSTART=0 (which ensures that no conversion is ongoing)

16.6.6 ADC sample time register 1 (ADCx_SMPR1)

Address offset: 0x14

Reset value: 0x0000 0000

31	30	29	28	27	26	25	24	23	22	21	20	19	18	17	16
Res.	Res.	SMP9[2:0]			SMP8[2:0]			SMP7[2:0]			SMP6[2:0]			SMP5[2:1]	
		rw	rw	rw	rw	rw	rw	rw	rw	rw	rw	rw	rw	rw	rw

15	14	13	12	11	10	9	8	7	6	5	4	3	2	1	0
SMP 5_0	SMP4[2:0]			SMP3[2:0]			SMP2[2:0]			SMP1[2:0]			SMP0[2:0]		
rw	rw	rw	rw	rw	rw	rw	rw	rw	rw	rw	rw	rw	rw	rw	rw

Bits 31:30 Reserved, must be kept at reset value.

Bits 29:0 **SMPx[2:0]:** Channel x sampling time selection

These bits are written by software to select the sampling time individually for each channel. During sample cycles, the channel selection bits must remain unchanged.

000: 2.5 ADC clock cycles
001: 6.5 ADC clock cycles
010: 12.5 ADC clock cycles
011: 24.5 ADC clock cycles
100: 47.5 ADC clock cycles
101: 92.5 ADC clock cycles
110: 247.5 ADC clock cycles
111: 640.5 ADC clock cycles

Note: Software is allowed to write these bits only when ADSTART=0 and JADSTART=0 (which ensures that no conversion is ongoing).

16.6.7 ADC sample time register 2 (ADCx_SMPR2)

Address offset: 0x18

Reset value: 0x0000 0000

31	30	29	28	27	26	25	24	23	22	21	20	19	18	17	16
Res.	Res.	Res.	Res.	Res.	SMP18[2:0]			SMP17[2:0]			SMP16[2:0]			SMP15[2:1]	
					rw	rw	rw	rw	rw	rw	rw	rw	rw	rw	rw

15	14	13	12	11	10	9	8	7	6	5	4	3	2	1	0
SMP15_0	SMP14[2:0]			SMP13[2:0]			SMP12[2:0]			SMP11[2:0]			SMP10[2:0]		
rw	rw	rw	rw	rw	rw	rw	rw	rw	rw	rw	rw	rw	rw	rw	rw

Bits 31:27 Reserved, must be kept at reset value.

Bits 26:0 **SMPx[2:0]:** Channel x sampling time selection

These bits are written by software to select the sampling time individually for each channel. During sampling cycles, the channel selection bits must remain unchanged.

000: 2.5 ADC clock cycles
001: 6.5 ADC clock cycles
010: 12.5 ADC clock cycles
011: 24.5 ADC clock cycles
100: 47.5 ADC clock cycles
101: 92.5 ADC clock cycles
110: 247.5 ADC clock cycles
111: 640.5 ADC clock cycles

Note: Software is allowed to write these bits only when ADSTART=0 and JADSTART=0 (which ensures that no conversion is ongoing).

16.6.8 ADC watchdog threshold register 1 (ADCx_TR1)

Address offset: 0x20

Reset value: 0x0FFF 0000

31	30	29	28	27	26	25	24	23	22	21	20	19	18	17	16
Res.	Res.	Res.	Res.	HT1[11:0]											
15	14	13	12	11	10	9	8	7	6	5	4	3	2	1	0
Res.	Res.	Res.	Res.	LT1[11:0]											
				rw	rw	rw	rw	rw	rw	rw	rw	rw	rw	rw	rw

Bits 31:28 Reserved, must be kept at reset value.

Bits 27:16 **HT1[11:0]**: Analog watchdog 1 higher threshold

These bits are written by software to define the higher threshold for the analog watchdog 1.

Refer to *Section 16.4.28: Analog window watchdog (AWD1EN, JAWD1EN, AWD1SGL, AWD1CH, AWD2CH, AWD3CH, AWD_HTx, AWD_LTx, AWDx)*

Note: Software is allowed to write these bits only when ADSTART=0 and JADSTART=0 (which ensures that no conversion is ongoing).

Bits 15:12 Reserved, must be kept at reset value.

Bits 11:0 **LT1[11:0]**: Analog watchdog 1 lower threshold

These bits are written by software to define the lower threshold for the analog watchdog 1.

Refer to *Section 16.4.28: Analog window watchdog (AWD1EN, JAWD1EN, AWD1SGL, AWD1CH, AWD2CH, AWD3CH, AWD_HTx, AWD_LTx, AWDx)*

Note: Software is allowed to write these bits only when ADSTART=0 and JADSTART=0 (which ensures that no conversion is ongoing).

16.6.9 ADC watchdog threshold register 2 (ADCx_TR2)

Address offset: 0x24

Reset value: 0x00FF 0000

31	30	29	28	27	26	25	24	23	22	21	20	19	18	17	16
Res.	Res.	Res.	Res.	Res.	Res.	Res.	Res.	HT2[7:0]							
								rw	rw	rw	rw	rw	rw	rw	rw
15	14	13	12	11	10	9	8	7	6	5	4	3	2	1	0
Res.	Res.	Res.	Res.	Res.	Res.	Res.	Res.	LT2[7:0]							
								rw	rw	rw	rw	rw	rw	rw	rw

Bits 31:24 Reserved, must be kept at reset value.

Bits 23:16 **HT2[7:0]**: Analog watchdog 2 higher threshold

These bits are written by software to define the higher threshold for the analog watchdog 2.
Refer to *Section 16.4.28: Analog window watchdog (AWD1EN, JAWD1EN, AWD1SGL, AWD1CH, AWD2CH, AWD3CH, AWD_HTx, AWD_LTx, AWDx)*

Note: Software is allowed to write these bits only when ADSTART=0 and JADSTART=0 (which ensures that no conversion is ongoing).

Bits 15:8 Reserved, must be kept at reset value.

Bits 7:0 **LT2[7:0]**: Analog watchdog 2 lower threshold

These bits are written by software to define the lower threshold for the analog watchdog 2.
Refer to *Section 16.4.28: Analog window watchdog (AWD1EN, JAWD1EN, AWD1SGL, AWD1CH, AWD2CH, AWD3CH, AWD_HTx, AWD_LTx, AWDx)*

Note: Software is allowed to write these bits only when ADSTART=0 and JADSTART=0 (which ensures that no conversion is ongoing).

16.6.10 ADC watchdog threshold register 3 (ADCx_TR3)

Address offset: 0x28

Reset value: 0x00FF 0000

31	30	29	28	27	26	25	24	23	22	21	20	19	18	17	16
Res.	Res.	Res.	Res.	Res.	Res.	Res.	Res.	HT3[7:0]							
								rw	rw	rw	rw	rw	rw	rw	rw
15	14	13	12	11	10	9	8	7	6	5	4	3	2	1	0
Res.	Res.	Res.	Res.	Res.	Res.	Res.	Res.	LT3[7:0]							
								rw	rw	rw	rw	rw	rw	rw	rw

Bits 31:24 Reserved, must be kept at reset value.

Bits 23:16 **HT3[7:0]**: Analog watchdog 3 higher threshold

These bits are written by software to define the higher threshold for the analog watchdog 3.
Refer to *Section 16.4.28: Analog window watchdog (AWD1EN, JAWD1EN, AWD1SGL, AWD1CH, AWD2CH, AWD3CH, AWD_HTx, AWD_LTx, AWDx)*

Note: Software is allowed to write these bits only when ADSTART=0 and JADSTART=0 (which ensures that no conversion is ongoing).

Bits 15:8 Reserved, must be kept at reset value.

Bits 7:0 **LT3[7:0]**: Analog watchdog 3 lower threshold

These bits are written by software to define the lower threshold for the analog watchdog 3.
This watchdog compares the 8-bit of LT3 with the 8 MSB of the converted data.

Note: Software is allowed to write these bits only when ADSTART=0 and JADSTART=0 (which ensures that no conversion is ongoing).

16.6.11 ADC regular sequence register 1 (ADCx_SQR1)

Address offset: 0x30

Reset value: 0x0000 0000

31	30	29	28	27	26	25	24	23	22	21	20	19	18	17	16
Res.	Res.	Res.	SQ4[4:0]					Res.	SQ3[4:0]					Res.	SQ2[4]
			rw	rw	rw	rw	rw		rw	rw	rw	rw	rw		rw

15	14	13	12	11	10	9	8	7	6	5	4	3	2	1	0
SQ2[3:0]				Res.	SQ1[4:0]					Res.	Res.	L[3:0]			
rw	rw	rw	rw		rw	rw	rw	rw	rw			rw	rw	rw	rw

Bits 31:29 Reserved, must be kept at reset value.

Bits 28:24 **SQ4[4:0]:** 4th conversion in regular sequence

These bits are written by software with the channel number (0..18) assigned as the 4th in the regular conversion sequence.

Note: Software is allowed to write these bits only when ADSTART=0 (which ensures that no regular conversion is ongoing).

Bit 23 Reserved, must be kept at reset value.

Bits 22:18 **SQ3[4:0]:** 3rd conversion in regular sequence

These bits are written by software with the channel number (0..18) assigned as the 3rd in the regular conversion sequence.

Note: Software is allowed to write these bits only when ADSTART=0 (which ensures that no regular conversion is ongoing).

Bit 17 Reserved, must be kept at reset value.

Bits 16:12 **SQ2[4:0]:** 2nd conversion in regular sequence

These bits are written by software with the channel number (0..18) assigned as the 2nd in the regular conversion sequence.

Note: Software is allowed to write these bits only when ADSTART=0 (which ensures that no regular conversion is ongoing).

Bit 11 Reserved, must be kept at reset value.

Bits 10:6 **SQ1[4:0]:** 1st conversion in regular sequence

These bits are written by software with the channel number (0..18) assigned as the 1st in the regular conversion sequence.

Note: Software is allowed to write these bits only when ADSTART=0 (which ensures that no regular conversion is ongoing).

Bits 5:4 Reserved, must be kept at reset value.

Bits 3:0 **L[3:0]:** Regular channel sequence length

These bits are written by software to define the total number of conversions in the regular channel conversion sequence.

0000: 1 conversion
0001: 2 conversions
...
1111: 16 conversions

Note: Software is allowed to write these bits only when ADSTART=0 (which ensures that no regular conversion is ongoing).

16.6.12 ADC regular sequence register 2 (ADCx_SQR2)

Address offset: 0x34

Reset value: 0x0000 0000

31	30	29	28	27	26	25	24	23	22	21	20	19	18	17	16
Res.	Res.	Res.	SQ9[4:0]					Res.	SQ8[4:0]					Res.	SQ7[4]
			rw	rw	rw	rw	rw		rw	rw	rw	rw	rw		rw

15	14	13	12	11	10	9	8	7	6	5	4	3	2	1	0
SQ7[3:0]				Res.	SQ6[4:0]					Res.	SQ5[4:0]				
rw	rw	rw	rw		rw	rw	rw	rw	rw		rw	rw	rw	rw	rw

Bits 31:29 Reserved, must be kept at reset value.

Bits 28:24 **SQ9[4:0]:** 9th conversion in regular sequence

These bits are written by software with the channel number (0..18) assigned as the 9th in the regular conversion sequence.

Note: Software is allowed to write these bits only when ADSTART=0 (which ensures that no regular conversion is ongoing).

Bit 23 Reserved, must be kept at reset value.

Bits 22:18 **SQ8[4:0]:** 8th conversion in regular sequence

These bits are written by software with the channel number (0..18) assigned as the 8th in the regular conversion sequence

Note: Software is allowed to write these bits only when ADSTART=0 (which ensures that no regular conversion is ongoing).

Bit 17 Reserved, must be kept at reset value.

Bits 16:12 **SQ7[4:0]:** 7th conversion in regular sequence

These bits are written by software with the channel number (0..18) assigned as the 7th in the regular conversion sequence.

Note: Software is allowed to write these bits only when ADSTART=0 (which ensures that no regular conversion is ongoing).

Bit 11 Reserved, must be kept at reset value.

Bits 10:6 **SQ6[4:0]:** 6th conversion in regular sequence

These bits are written by software with the channel number (0..18) assigned as the 6th in the regular conversion sequence.

Note: Software is allowed to write these bits only when ADSTART=0 (which ensures that no regular conversion is ongoing).

Bit 5 Reserved, must be kept at reset value.

Bits 4:0 **SQ5[4:0]:** 5th conversion in regular sequence

These bits are written by software with the channel number (0..18) assigned as the 5th in the regular conversion sequence.

Note: Software is allowed to write these bits only when ADSTART=0 (which ensures that no regular conversion is ongoing).

16.6.13 ADC regular sequence register 3 (ADCx_SQR3)

Address offset: 0x38

Reset value: 0x0000 0000

31	30	29	28	27	26	25	24	23	22	21	20	19	18	17	16
Res.	Res.	Res.	SQ14[4:0]					Res.	SQ13[4:0]					Res.	SQ12[4]
			rw	rw	rw	rw	rw		rw	rw	rw	rw	rw		rw

15	14	13	12	11	10	9	8	7	6	5	4	3	2	1	0
SQ12[3:0]				Res.	SQ11[4:0]					Res.	SQ10[4:0]				
rw	rw	rw	rw		rw	rw	rw	rw	rw		rw	rw	rw	rw	rw

Bits 31:29 Reserved, must be kept at reset value.

Bits 28:24 **SQ14[4:0]:** 14th conversion in regular sequence

These bits are written by software with the channel number (0..18) assigned as the 14th in the regular conversion sequence.

Note: Software is allowed to write these bits only when ADSTART=0 (which ensures that no regular conversion is ongoing).

Bit 23 Reserved, must be kept at reset value.

Bits 22:18 **SQ13[4:0]:** 13th conversion in regular sequence

These bits are written by software with the channel number (0..18) assigned as the 13th in the regular conversion sequence.

Note: Software is allowed to write these bits only when ADSTART=0 (which ensures that no regular conversion is ongoing).

Bit 17 Reserved, must be kept at reset value.

Bits 16:12 **SQ12[4:0]:** 12th conversion in regular sequence

These bits are written by software with the channel number (0..18) assigned as the 12th in the regular conversion sequence.

Note: Software is allowed to write these bits only when ADSTART=0 (which ensures that no regular conversion is ongoing).

Bit 11 Reserved, must be kept at reset value.

Bits 10:6 **SQ11[4:0]:** 11th conversion in regular sequence

These bits are written by software with the channel number (0..18) assigned as the 11th in the regular conversion sequence.

Note: Software is allowed to write these bits only when ADSTART=0 (which ensures that no regular conversion is ongoing).

Bit 5 Reserved, must be kept at reset value.

Bits 4:0 **SQ10[4:0]:** 10th conversion in regular sequence

These bits are written by software with the channel number (0..18) assigned as the 10th in the regular conversion sequence.

Note: Software is allowed to write these bits only when ADSTART=0 (which ensures that no regular conversion is ongoing).

16.6.14 ADC regular sequence register 4 (ADCx_SQR4)

Address offset: 0x3C

Reset value: 0x0000 0000

31	30	29	28	27	26	25	24	23	22	21	20	19	18	17	16
Res.	Res.	Res.	Res.	Res.	Res.	Res.	Res.	Res.	Res.	Res.	Res.	Res.	Res.	Res.	Res.

15	14	13	12	11	10	9	8	7	6	5	4	3	2	1	0
Res.	Res.	Res.	Res.	Res.	SQ16[4:0]					Res.	SQ15[4:0]				
					rw	rw	rw	rw	rw		rw	rw	rw	rw	rw

Bits 31:11 Reserved, must be kept at reset value.

Bits 10:6 **SQ16[4:0]:** 16th conversion in regular sequence

These bits are written by software with the channel number (0..18) assigned as the 16th in the regular conversion sequence.

Note: Software is allowed to write these bits only when ADSTART=0 (which ensures that no regular conversion is ongoing).

Bit 5 Reserved, must be kept at reset value.

Bits 4:0 **SQ15[4:0]:** 15th conversion in regular sequence

These bits are written by software with the channel number (0..18) assigned as the 15th in the regular conversion sequence.

Note: Software is allowed to write these bits only when ADSTART=0 (which ensures that no regular conversion is ongoing).

16.6.15 ADC regular Data Register (ADCx_DR)

Address offset: 0x40

Reset value: 0x0000 0000

31	30	29	28	27	26	25	24	23	22	21	20	19	18	17	16
Res.	Res.	Res.	Res.	Res.	Res.	Res.	Res.	Res.	Res.	Res.	Res.	Res.	Res.	Res.	Res.

15	14	13	12	11	10	9	8	7	6	5	4	3	2	1	0
RDATA[15:0]															
r	r	r	r	r	r	r	r	r	r	r	r	r	r	r	r

Bits 31:16 Reserved, must be kept at reset value.

Bits 15:0 **RDATA[15:0]**: Regular Data converted

These bits are read-only. They contain the conversion result from the last converted regular channel. The data are left- or right-aligned as described in *Section 16.4.26: Data management*.

16.6.16 ADC injected sequence register (ADCx_JSQR)

Address offset: 0x4C

Reset value: 0x0000 0000

31	30	29	28	27	26	25	24	23	22	21	20	19	18	17	16
Res.	JSQ4[4:0]					Res.	JSQ3[4:0]					Res.	JSQ2[4:2]		
	rw	rw	rw	rw	rw		rw	rw	rw	rw	rw		rw	rw	rw

15	14	13	12	11	10	9	8	7	6	5	4	3	2	1	0
JSQ2[1:0]		Res.	JSQ1[4:0]					JEXTEN[1:0]		JEXTSEL[3:0]				JL[1:0]	
rw	rw		rw	rw	rw	rw	rw	rw		rw	rw	rw	rw	rw	rw

Bit 31 Reserved, must be kept at reset value.

Bits 30:26 **JSQ4[4:0]:** 4th conversion in the injected sequence

These bits are written by software with the channel number (0..18) assigned as the 4th in the injected conversion sequence.

Note: Software is allowed to write these bits at any time, once the ADC is enabled (ADEN=1).

Bit 25 Reserved, must be kept at reset value.

Bits 24:20 **JSQ3[4:0]:** 3rd conversion in the injected sequence

These bits are written by software with the channel number (0..18) assigned as the 3rd in the injected conversion sequence.

Note: Software is allowed to write these bits at any time, once the ADC is enabled (ADEN=1).

Bit 19 Reserved, must be kept at reset value.

Bits 18:14 **JSQ2[4:0]:** 2nd conversion in the injected sequence

These bits are written by software with the channel number (0..18) assigned as the 2nd in the injected conversion sequence.

Note: Software is allowed to write these bits at any time, once the ADC is enabled (ADEN=1).

Bit 13 Reserved, must be kept at reset value.

Bits 12:8 **JSQ1[4:0]:** 1st conversion in the injected sequence

These bits are written by software with the channel number (0..18) assigned as the 1st in the injected conversion sequence.

Note: Software is allowed to write these bits at any time, once the ADC is enabled (ADEN=1).

Bits 7:6 **JEXTEN[1:0]**: External Trigger Enable and Polarity Selection for injected channels

These bits are set and cleared by software to select the external trigger polarity and enable the trigger of an injected group.

00: If JQDIS=0 (queue enabled), Hardware and software trigger detection disabled

00: If JQDIS=1 (queue disabled), Hardware trigger detection disabled (conversions can be launched by software)

01: Hardware trigger detection on the rising edge

10: Hardware trigger detection on the falling edge

11: Hardware trigger detection on both the rising and falling edges

Note: Software is allowed to write these bits at any time, once the ADC is enabled (ADEN=1).

If JQM=1 and if the Queue of Context becomes empty, the software and hardware triggers of the injected sequence are both internally disabled (refer to Section 16.4.21: Queue of context for injected conversions)

Bits 5:2 **JEXTSEL[3:0]**: External Trigger Selection for injected group

These bits select the external event used to trigger the start of conversion of an injected group:

0000: Event 0

0001: Event 1

0010: Event 2

0011: Event 3

0100: Event 4

0101: Event 5

0110: Event 6

0111: Event 7

...

1111: Event 15

Note: Software is allowed to write these bits at any time, once the ADC is enabled (ADEN=1).

Bits 1:0 **JL[1:0]:** Injected channel sequence length

These bits are written by software to define the total number of conversions in the injected channel conversion sequence.

00: 1 conversion

01: 2 conversions

10: 3 conversions

11: 4 conversions

Note: Software is allowed to write these bits at any time, once the ADC is enabled (ADEN=1).

16.6.17 ADC offset register (ADCx_OFRy) (y=1..4)

Address offset: 0x60, 0x64, 0x68, 0x6C

Reset value: 0x0000 0000

31	30	29	28	27	26	25	24	23	22	21	20	19	18	17	16
OFFSETy_EN	OFFSETy_CH[4:0]					Res.	Res.	Res.	Res.	Res.	Res.	Res.	Res.	Res.	Res.
rw	rw	rw	rw	rw	rw										

15	14	13	12	11	10	9	8	7	6	5	4	3	2	1	0
Res.	Res.	Res.	Res.	OFFSETy[11:0]											
				rw	rw	rw	rw	rw	rw	rw	rw	rw	rw	rw	rw

Bit 31 **OFFSETy_EN:** Offset y Enable

This bit is written by software to enable or disable the offset programmed into bits OFFSETy[11:0].

Note: Software is allowed to write this bit only when ADSTART=0 and JADSTART=0 (which ensures that no conversion is ongoing).

Bits 30:26 **OFFSETy_CH[4:0]:** Channel selection for the Data offset y

These bits are written by software to define the channel to which the offset programmed into bits OFFSETy[11:0] will apply.

Note: Software is allowed to write these bits only when ADSTART=0 and JADSTART=0 (which ensures that no conversion is ongoing).

Bits 25:12 Reserved, must be kept at reset value.

Bits 11:0 **OFFSETy[11:0]:** Data offset y for the channel programmed into bits OFFSETy_CH[4:0]

These bits are written by software to define the offset y to be subtracted from the raw converted data when converting a channel (can be regular or injected). The channel to which applies the data offset y must be programmed in the bits OFFSETy_CH[4:0]. The conversion result can be read from in the ADCx_DR (regular conversion) or from in the ADCx_JDRyi registers (injected conversion).

Note: Software is allowed to write these bits only when ADSTART=0 and JADSTART=0 (which ensures that no conversion is ongoing).

If several offset (OFFSETy) point to the same channel, only the offset with the lowest x value is considered for the subtraction.
Ex: if OFFSET1_CH[4:0]=4 and OFFSET2_CH[4:0]=4, this is OFFSET1[11:0] which is subtracted when converting channel 4.

16.6.18 ADC injected data register (ADCx_JDRy, y= 1..4)

Address offset: 0x80 - 0x8C

Reset value: 0x0000 0000

31	30	29	28	27	26	25	24	23	22	21	20	19	18	17	16
Res.	Res.	Res.	Res.	Res.	Res.	Res.	Res.	Res.	Res.	Res.	Res.	Res.	Res.	Res.	Res.

15	14	13	12	11	10	9	8	7	6	5	4	3	2	1	0
JDATA[15:0]															
r	r	r	r	r	r	r	r	r	r	r	r	r	r	r	r

Bits 31:16 Reserved, must be kept at reset value.

Bits 15:0 **JDATA[15:0]:** Injected data

These bits are read-only. They contain the conversion result from injected channel y. The data are left -or right-aligned as described in *Section 16.4.26: Data management*.

16.6.19 ADC Analog Watchdog 2 Configuration Register (ADCx_AWD2CR)

Address offset: 0xA0

Reset value: 0x0000 0000

31	30	29	28	27	26	25	24	23	22	21	20	19	18	17	16
Res.	Res.	Res.	Res.	Res.	Res.	Res.	Res.	Res.	Res.	Res.	Res.	Res.	AWD2CH[18:16]		
													rw	rw	rw

15	14	13	12	11	10	9	8	7	6	5	4	3	2	1	0
AWD2CH[15:0]															
rw	rw	rw	rw	rw	rw	rw	rw	rw	rw	rw	rw	rw	rw	rw	rw

Bits 31:19 Reserved, must be kept at reset value.

Bits 18:0 **AWD2CH[18:0]**: Analog watchdog 2 channel selection

These bits are set and cleared by software. They enable and select the input channels to be guarded by the analog watchdog 2.

AWD2CH[i] = 0: ADC analog input channel-i is not monitored by AWD2

AWD2CH[i] = 1: ADC analog input channel-i is monitored by AWD2

When AWD2CH[18:0] = 000..0, the analog Watchdog 2 is disabled

Note: The channels selected by AWD2CH must be also selected into the SQRi or JSQRi registers. Software is allowed to write these bits only when ADSTART=0 and JADSTART=0 (which ensures that no conversion is ongoing).

16.6.20 ADC Analog Watchdog 3 Configuration Register (ADCx_AWD3CR)

Address offset: 0xA4

Reset value: 0x0000 0000

31	30	29	28	27	26	25	24	23	22	21	20	19	18	17	16
Res.	Res.	Res.	Res.	Res.	Res.	Res.	Res.	Res.	Res.	Res.	Res.	Res.	AWD3CH[18:16]		

15	14	13	12	11	10	9	8	7	6	5	4	3	2	1	0
AWD3CH[15:0]															
rw	rw	rw	rw	rw	rw	rw	rw	rw	rw	rw	rw	rw	rw	rw	rw

Bits 31:19 Reserved, must be kept at reset value.

Bits 18:0 **AWD2CH[18:0]**: Analog watchdog 2 channel selection

These bits are set and cleared by software. They enable and select the input channels to be guarded by the analog watchdog 2.

AWD2CH[i] = 0: ADC analog input channel-i is not monitored by AWD2

AWD2CH[i] = 1: ADC analog input channel-i is monitored by AWD2

When AWD2CH[18:0] = 000..0, the analog Watchdog 2 is disabled

Note: The channels selected by AWD2CH must be also selected into the SQRi or JSQRi registers. Software is allowed to write these bits only when ADSTART=0 and JADSTART=0 (which ensures that no conversion is ongoing).

16.6.21 ADC Differential Mode Selection Register (ADCx_DIFSEL)

Address offset: 0xB0

Reset value: 0x0000 0000

31	30	29	28	27	26	25	24	23	22	21	20	19	18	17	16
Res.	Res.	Res.	Res.	Res.	Res.	Res.	Res.	Res.	Res.	Res.	Res.	Res.	DIFSEL[18:16]		
													r	r	r
15	14	13	12	11	10	9	8	7	6	5	4	3	2	1	0
DIFSEL[15:0]															
rw	rw	rw	rw	rw	rw	rw	rw	rw	rw	rw	rw	rw	rw	rw	r

Bits 31:19 Reserved, must be kept at reset value.

Bits 18:16 **DIFSEL[18:16]**: Differential mode for channels 18 to 16.

These bits are read only. These channels are forced to single-ended input mode (either connected to a single-ended I/O port or to an internal channel).

Bits 15:1 **DIFSEL[15:1]**: Differential mode for channels 15 to 1

These bits are set and cleared by software. They allow to select if a channel is configured as single ended or differential mode.

DIFSEL[i] = 0: ADC analog input channel-i is configured in single ended mode

DIFSEL[i] = 1: ADC analog input channel-i is configured in differential mode

Note: Software is allowed to write these bits only when the ADC is disabled (ADCAL=0, JADSTART=0, JADSTP=0, ADSTART=0, ADSTP=0, ADDIS=0 and ADEN=0).

It is mandatory to keep cleared ADC1_DIFSEL[15] (connected to an internal single ended channel)

Bit 0 **DIFSEL[0]**: Differential mode for channel 0

This bit is read only. This channel is forced to single-ended input mode (connected to an internal channel).

16.6.22 ADC Calibration Factors (ADCx_CALFACT)

Address offset: 0xB4

Reset value: 0x0000 0000

31	30	29	28	27	26	25	24	23	22	21	20	19	18	17	16
Res.	Res.	Res.	Res.	Res.	Res.	Res.	Res.	Res.	CALFACT_D[6:0]						
									rw	rw	rw	rw	rw	rw	rw
15	14	13	12	11	10	9	8	7	6	5	4	3	2	1	0
Res.	Res.	Res.	Res.	Res.	Res.	Res.	Res.	Res.	CALFACT_S[6:0]						
									rw	rw	rw	rw	rw	rw	rw

Bits 31:23 Reserved, must be kept at reset value.

Bits 22:16 **CALFACT_D[6:0]**: Calibration Factors in differential mode

These bits are written by hardware or by software.

Once a differential inputs calibration is complete, they are updated by hardware with the calibration factors.

Software can write these bits with a new calibration factor. If the new calibration factor is different from the current one stored into the analog ADC, it will then be applied once a new differential calibration is launched.

Note: Software is allowed to write these bits only when ADEN=1, ADSTART=0 and JADSTART=0 (ADC is enabled and no calibration is ongoing and no conversion is ongoing).

Bits 15:7 Reserved, must be kept at reset value.

Bits 6:0 **CALFACT_S[6:0]**: Calibration Factors In Single-Ended mode

These bits are written by hardware or by software.

Once a single-ended inputs calibration is complete, they are updated by hardware with the calibration factors.

Software can write these bits with a new calibration factor. If the new calibration factor is different from the current one stored into the analog ADC, it will then be applied once a new single-ended calibration is launched.

Note: Software is allowed to write these bits only when ADEN=1, ADSTART=0 and JADSTART=0 (ADC is enabled and no calibration is ongoing and no conversion is ongoing).

16.7 ADC common registers

These registers define the control and status registers common to master and slave ADCs:

16.7.1 ADC Common status register (ADCx_CSR)

Address offset: 0x00 (this offset address is relative to the master ADC base address + 0x300)

Reset value: 0x0000 0000

This register provides an image of the status bits of the different ADCs. Nevertheless it is read-only and does not allow to clear the different status bits. Instead each status bit must be cleared by writing 0 to it in the corresponding ADCx_SR register.

31	30	29	28	27	26	25	24	23	22	21	20	19	18	17	16
Res.	Res.	Res.	Res.	Res.	JQOVF_SLV	AWD3_SLV	AWD2_SLV	AWD1_SLV	JEOS_SLV	JEOC_SLV	OVR_SLV	EOS_SLV	EOC_SLV	EOSMP_SLV	ADRDY_SLV
					r	r	r	r	r	r	r	r	r	r	r
15	14	13	12	11	10	9	8	7	6	5	4	3	2	1	0
Res.	Res.	Res.	Res.	Res.	JQOVF_MST	AWD3_MST	AWD2_MST	AWD1_MST	JEOS_MST	JEOC_MST	OVR_MST	EOS_MST	EOC_MST	EOSMP_MST	ADRDY_MST
					r	r	r	r	r	r	r	r	r	r	r

Bits 31:27 Reserved, must be kept at reset value.

Bit 26 **JQOVF_SLV:** Injected Context Queue Overflow flag of the slave ADC (on devices with 2 ADCs)
This bit is a copy of the JQOVF bit in the corresponding ADCx_ISR register.

Bit 25 **AWD3_SLV:** Analog watchdog 3 flag of the slave ADC (on devices with 2 ADCs)
This bit is a copy of the AWD3 bit in the corresponding ADCx_ISR register.

Bit 24 **AWD2_SLV:** Analog watchdog 2 flag of the slave ADC (on devices with 2 ADCs)
This bit is a copy of the AWD2 bit in the corresponding ADCx_ISR register.

Bit 23 **AWD1_SLV:** Analog watchdog 1 flag of the slave ADC (on devices with 2 ADCs)
This bit is a copy of the AWD1 bit in the corresponding ADCx_ISR register.

Bit 22 **JEOS_SLV:** End of injected sequence flag of the slave ADC (on devices with 2 ADCs)
This bit is a copy of the JEOS bit in the corresponding ADCx_ISR register.

Bit 21 **JEOC_SLV:** End of injected conversion flag of the slave ADC (on devices with 2 ADCs)
This bit is a copy of the JEOC bit in the corresponding ADCx_ISR register.

Bit 20 **OVR_SLV:** Overrun flag of the slave ADC (on devices with 2 ADCs)
This bit is a copy of the OVR bit in the corresponding ADCx_ISR register.

Bit 19 **EOS_SLV:** End of regular sequence flag of the slave ADC (on devices with 2 ADCs). This bit is a copy of the EOS bit in the corresponding ADCx_ISR register.

Bit 18 **EOC_SLV:** End of regular conversion of the slave ADC (on devices with 2 ADCs)
This bit is a copy of the EOC bit in the corresponding ADCx_ISR register.

Bit 17 **EOSMP_SLV:** End of Sampling phase flag of the slave ADC (on devices with 2 ADCs)
This bit is a copy of the EOSMP2 bit in the corresponding ADCx_ISR register.

Bit 16 **ADRDY_SLV:** Slave ADC ready (on devices with 2 ADCs)
This bit is a copy of the ADRDY bit in the corresponding ADCx_ISR register.

Bits 15:11 Reserved, must be kept at reset value.

Bit 10 **JQOVF_MST:** Injected Context Queue Overflow flag of the master ADC
This bit is a copy of the JQOVF bit in the corresponding ADCx_ISR register.

Bit 9 **AWD3_MST:** Analog watchdog 3 flag of the master ADC
This bit is a copy of the AWD3 bit in the corresponding ADCx_ISR register.

Bit 8 **AWD2_MST:** Analog watchdog 2 flag of the master ADC
This bit is a copy of the AWD2 bit in the corresponding ADCx_ISR register.

Bit 7 **AWD1_MST:** Analog watchdog 1 flag of the master ADC
This bit is a copy of the AWD1 bit in the corresponding ADCx_ISR register.

Bit 6 **JEOS_MST:** End of injected sequence flag of the master ADC
This bit is a copy of the JEOS bit in the corresponding ADCx_ISR register.

Bit 5 **JEOC_MST:** End of injected conversion flag of the master ADC
This bit is a copy of the JEOC bit in the corresponding ADCx_ISR register.

Bit 4 **OVR_MST:** Overrun flag of the master ADC
This bit is a copy of the OVR bit in the corresponding ADCx_ISR register.

Bit 3 **EOS_MST:** End of regular sequence flag of the master ADC
This bit is a copy of the EOS bit in the corresponding ADCx_ISR register.

Bit 2 **EOC_MST:** End of regular conversion of the master ADC
This bit is a copy of the EOC bit in the corresponding ADCx_ISR register.

Bit 1 **EOSMP_MST:** End of Sampling phase flag of the master ADC
This bit is a copy of the EOSMP bit in the corresponding ADCx_ISR register.

Bit 0 **ADRDY_MST:** Master ADC ready
This bit is a copy of the ADRDY bit in the corresponding ADCx_ISR register.

16.7.2 ADC common control register (ADCx_CCR)

Address offset: 0x08 (this offset address is relative to the master ADC base address + 0x300)

Reset value: 0x0000 0000

31	30	29	28	27	26	25	24	23	22	21	20	19	18	17	16
Res.	Res.	Res.	Res.	Res.	Res.	Res.	CH18 SEL	CH17 SEL	VREF EN	PRESC[3:0]				CKMODE[1:0]	
							rw	rw	rw	rw	rw	rw	rw	rw	rw

15	14	13	12	11	10	9	8	7	6	5	4	3	2	1	0
MDMA[1:0]		DMA CFG	Res.	DELAY[3:0]				Res.	Res.	Res.	DUAL[4:0]				
rw	rw	rw		rw	rw	rw	rw				rw	rw	rw	rw	rw

Bits 31:25 Reserved, must be kept at reset value.

Bit 24 **CH18SEL**: CH18 selection
This bit is set and cleared by software to control the channel 18 of ADC1
0: V_{BAT} channel disabled, DAC2_int selected on single ADC devices.
1: V_{BAT} channel enabled

Note: Software is allowed to write this bit only when the ADCs are disabled (ADCAL=0, JADSTART=0, ADSTART=0, ADSTP=0, ADDIS=0 and ADEN=0).

Bit 23 **CH17SEL**: CH17 selection
This bit is set and cleared by software to control the channel 17 of ADC1
0: Temperature sensor channel disabled, DAC1_int selected on single ADC devices
1: Temperature sensor channel enabled

Note: Software is allowed to write this bit only when the ADCs are disabled (ADCAL=0, JADSTART=0, ADSTART=0, ADSTP=0, ADDIS=0 and ADEN=0).

Bit 22 **VREFEN**: V_{REFINT} enable
This bit is set and cleared by software to enable/disable the V_{REFINT} channel.
0: V_{REFINT} channel disabled
1: V_{REFINT} channel enabled

Note: Software is allowed to write this bit only when the ADCs are disabled (ADCAL=0, JADSTART=0, ADSTART=0, ADSTP=0, ADDIS=0 and ADEN=0).

Bits 21:18 **PRESC[3:0]**: ADC prescaler

These bits are set and cleared by software to select the frequency of the clock to the ADC. The clock is common for all the ADCs.

0000: input ADC clock not divided
0001: input ADC clock divided by 2
0010: input ADC clock divided by 4
0011: input ADC clock divided by 6
0100: input ADC clock divided by 8
0101: input ADC clock divided by 10
0110: input ADC clock divided by 12
0111: input ADC clock divided by 16
1000: input ADC clock divided by 32
1001: input ADC clock divided by 64
1010: input ADC clock divided by 128
1011: input ADC clock divided by 256
other: reserved

Note: Software is allowed to write these bits only when the ADC is disabled (ADCAL=0, JADSTART=0, ADSTART=0, ADSTP=0, ADDIS=0 and ADEN=0). The ADC prescaler value is applied only when CKMODE[1:0] = 0b00.

Bits 17:16 **CKMODE[1:0]:** ADC clock mode

These bits are set and cleared by software to define the ADC clock scheme (which is common to both master and slave ADCs):

00: CK_ADCx (x=123) (Asynchronous clock mode), generated at product level (refer to *Section 6: Reset and clock control (RCC)*)

01: HCLK/1 (Synchronous clock mode). This configuration must be enabled only if the AHB clock prescaler is set to 1 (HPRE[3:0] = 0xxx in RCC_CFGR register) and if the system clock has a 50% duty cycle.

10: HCLK/2 (Synchronous clock mode)

11: HCLK/4 (Synchronous clock mode)

In all synchronous clock modes, there is no jitter in the delay from a timer trigger to the start of a conversion.

Note: Software is allowed to write these bits only when the ADCs are disabled (ADCAL=0, JADSTART=0, ADSTART=0, ADSTP=0, ADDIS=0 and ADEN=0).

Bits 15:14 **MDMA[1:0]:** Direct memory access mode for dual ADC mode (on devices with 2 ADCs)

This bit-field is set and cleared by software. Refer to the DMA controller section for more details.

00: MDMA mode disabled
01: reserved
10: MDMA mode enabled for 12 and 10-bit resolution
11: MDMA mode enabled for 8 and 6-bit resolution

Note: Software is allowed to write these bits only when ADSTART=0 (which ensures that no regular conversion is ongoing).

Bit 13 **DMACFG:** DMA configuration (for dual ADC mode) (on devices with 2 ADCs)

This bit is set and cleared by software to select between two DMA modes of operation and is effective only when DMAEN=1.

0: DMA One Shot Mode selected
1: DMA Circular Mode selected

For more details, refer to *Section : Managing conversions using the DMA*

Note: Software is allowed to write these bits only when ADSTART=0 (which ensures that no regular conversion is ongoing).

Bit 12 Reserved, must be kept at reset value.

Bits 11:8 **DELAY:** Delay between 2 sampling phases (on devices with 2 ADCs)

These bits are set and cleared by software. These bits are used in dual interleaved modes. Refer to *Table 69* for the value of ADC resolution versus DELAY bits values.

Note: Software is allowed to write these bits only when the ADCs are disabled (ADCAL=0, JADSTART=0, ADSTART=0, ADSTP=0, ADDIS=0 and ADEN=0).

Bits 7:5 Reserved, must be kept at reset value.

Bits 4:0 **DUAL[4:0]:** Dual ADC mode selection (on devices with 2 ADCs)

These bits are written by software to select the operating mode.

All the ADCs independent:

00000: Independent mode

00001 to 01001: Dual mode, master and slave ADCs working together

00001: Combined regular simultaneous + injected simultaneous mode

00010: Combined regular simultaneous + alternate trigger mode

00011: Combined Interleaved mode + injected simultaneous mode

00100: Reserved

00101: Injected simultaneous mode only

00110: Regular simultaneous mode only

00111: Interleaved mode only

01001: Alternate trigger mode only

All other combinations are reserved and must not be programmed

Note: Software is allowed to write these bits only when the ADCs are disabled (ADCAL=0, JADSTART=0, ADSTART=0, ADSTP=0, ADDIS=0 and ADEN=0).

Table 69. DELAY bits versus ADC resolution

DELAY bits	12-bit resolution	10-bit resolution	8-bit resolution	6-bit resolution
0000	1 * T_{ADC_CLK}	1 * T_{ADC_CLK}	1 * T_{ADC_CLK}	1 * T_{ADC_CLK}
0001	2 * T_{ADC_CLK}	2 * T_{ADC_CLK}	2 * T_{ADC_CLK}	2 * T_{ADC_CLK}
0010	3 * T_{ADC_CLK}	3 * T_{ADC_CLK}	3 * T_{ADC_CLK}	3 * T_{ADC_CLK}
0011	4 * T_{ADC_CLK}	4 * T_{ADC_CLK}	4 * T_{ADC_CLK}	4 * T_{ADC_CLK}
0100	5 * T_{ADC_CLK}	5 * T_{ADC_CLK}	5 * T_{ADC_CLK}	5 * T_{ADC_CLK}
0101	6 * T_{ADC_CLK}	6 * T_{ADC_CLK}	6 * T_{ADC_CLK}	6 * T_{ADC_CLK}
0110	7 * T_{ADC_CLK}	7 * T_{ADC_CLK}	7 * T_{ADC_CLK}	6 * T_{ADC_CLK}
0111	8 * T_{ADC_CLK}	8 * T_{ADC_CLK}	8 * T_{ADC_CLK}	6 * T_{ADC_CLK}
1000	9 * T_{ADC_CLK}	9 * T_{ADC_CLK}	8 * T_{ADC_CLK}	6 * T_{ADC_CLK}
1001	10 * T_{ADC_CLK}	10 * T_{ADC_CLK}	8 * T_{ADC_CLK}	6 * T_{ADC_CLK}
1010	11 * T_{ADC_CLK}	10 * T_{ADC_CLK}	8 * T_{ADC_CLK}	6 * T_{ADC_CLK}
1011	12 * T_{ADC_CLK}	10 * T_{ADC_CLK}	8 * T_{ADC_CLK}	6 * T_{ADC_CLK}
others	12 * T_{ADC_CLK}	10 * T_{ADC_CLK}	8 * T_{ADC_CLK}	6 * T_{ADC_CLK}

16.7.3 ADC common regular data register for dual mode (ADCx_CDR)

Address offset: 0x0C (this offset address is relative to the master ADC base address + 0x300)

Reset value: 0x0000 0000

31	30	29	28	27	26	25	24	23	22	21	20	19	18	17	16
RDATA_SLV[15:0]															
r	r	r	r	r	r	r	r	r	r	r	r	r	r	r	r
15	14	13	12	11	10	9	8	7	6	5	4	3	2	1	0
RDATA_MST[15:0]															
r	r	r	r	r	r	r	r	r	r	r	r	r	r	r	r

Bits 31:16 **RDATA_SLV[15:0]:** Regular data of the slave ADC (on devices with 2 ADCs)

In dual mode, these bits contain the regular data of the slave ADC. Refer to *Section 16.4.30: Dual ADC modes (on devices with 2 ADCs)*.

The data alignment is applied as described in *Section : Data register, data alignment and offset (ADCx_DR, OFFSETy, OFFSETy_CH, ALIGN)*)

Bits 15:0 **RDATA_MST[15:0]**: Regular data of the master ADC.

In dual mode, these bits contain the regular data of the master ADC. Refer to *Section 16.4.30: Dual ADC modes (on devices with 2 ADCs)*.

The data alignment is applied as described in *Section : Data register, data alignment and offset (ADCx_DR, OFFSETy, OFFSETy_CH, ALIGN)*)

In MDMA=0b11 mode, bits 15:8 contains SLV_ADC_DR[7:0], bits 7:0 contains MST_ADC_DR[7:0].

16.7.4 ADC register map

The following table summarizes the ADC registers.

Table 70. ADC global register map

Offset	Register
0x000 - 0x0B4	Master ADC1
0x0B8 - 0x0FC	Reserved
0x100 - 0x1B4	Slave ADC2 (on devices with 2 ADCs)
0x1B8 - 0x1FC	Reserved
0x200 - 0x2B4	Reserved
0x2B8 - 0x2FC	Reserved
0x300 - 0x30C	Master and slave ADCs common registers

Table 71. ADC register map and reset values for each ADC (offset=0x000 for master ADC, 0x100 for slave ADC)

Offset	Register	31	30	29	28	27	26	25	24	23	22	21	20	19	18	17	16	15	14	13	12	11	10	9	8	7	6	5	4	3	2	1	0
0x00	**ADCx_ISR**	Res.	Res.	Res.	Res.	Res.	Res.	Res.	Res.	Res.	Res.	Res.	Res.	Res.	Res.	Res.	Res.	Res.	Res.	Res.	Res.	Res.	JQOVF	AWD3	AWD2	AWD1	JEOS	JEOC	OVR	EOS	EOC	EOSMP	ADRDY
	Reset value																						0	0	0	0	0	0	0	0	0	0	0
0x04	**ADCx_IER**	Res.	Res.	Res.	Res.	Res.	Res.	Res.	Res.	Res.	Res.	Res.	Res.	Res.	Res.	Res.	Res.	Res.	Res.	Res.	Res.	Res.	JQOVFIE	AWD3IE	AWD2IE	AWD1IE	JEOSIE	JEOCIE	OVRIE	EOSIE	EOCIE	EOSMPIE	ADRDYIE
	Reset value																						0	0	0	0	0	0	0	0	0	0	0
0x08	**ADCx_CR**	ADCAL	ADCALDIF	DEEPPWD	ADVREGEN	Res.	Res.	Res.	Res.	Res.	Res.	Res.	Res.	Res.	Res.	Res.	Res.	Res.	Res.	Res.	Res.	Res.	Res.	Res.	Res.	Res.	Res.	JADSTP	ADSTP	JADSTART	ADSTART	ADDIS	ADEN
	Reset value	0	0	1	0																							0	0	0	0	0	0
0x0C	**ADCx_CFGR**	JQDIS	AWD1CH[4:0]					JAUTO	JAWD1EN	AWD1EN	AWD1SGL	JQM	JDISCEN	DISCNUM [2:0]			DISCEN	Res.	AUTDLY	CONT	OVRMOD	EXTEN[1:0]		EXTSEL [3:0]				ALIGN	RES [1:0]		Res.	DMACFG	DMAEN
	Reset value	1	0	0	0	0	0	0	0	0	0	0	0	0	0	0	0		0	0	0	0	0	0	0	0	0	0	0	0		0	0
0x0C	**ADCx_CFGR2**	Res.	Res.	Res.	Res.	Res.	Res.	Res.	Res.	Res.	Res.	Res.	Res.	Res.	Res.	Res.	Res.	Res.	Res.	Res.	Res.	Res.	ROVSM	TROVS	OVSS[3:0]				OVSR [2:0]			JOVSE	ROVSE
	Reset value																						0	0	0	0	0	0	0	0	0	0	0
0x14	**ADCx_SMPR1**	Res.	Res.	SMP9 [2:0]			SMP8 [2:0]			SMP7 [2:0]			SMP6 [2:0]			SMP5 [2:0]			SMP4 [2:0]			SMP3 [2:0]			SMP2 [2:0]			SMP1 [2:0]			SMP0 [2:0]		
	Reset value			0	0	0	0	0	0	0	0	0	0	0	0	0	0	0	0	0	0	0	0	0	0	0	0	0	0	0	0	0	0
0x18	**ADCx_SMPR2**	Res.	Res.	Res.	Res.	Res.	SMP18 [2:0]			SMP17 [2:0]			SMP16 [2:0]			SMP15 [2:0]			SMP14 [2:0]			SMP13 [2:0]			SMP12 [2:0]			SMP11 [2:0]			SMP10 [2:0]		
	Reset value						0	0	0	0	0	0	0	0	0	0	0	0	0	0	0	0	0	0	0	0	0	0	0	0	0	0	0
0x1C	Reserved	Res.																															
0x20	**ADCx_TR1**	Res.	Res.	Res.	Res.	HT1[11:0]												Res.	Res.	Res.	Res.	LT1[11:0]											
	Reset value					1	1	1	1	1	1	1	1	1	1	1	1					0	0	0	0	0	0	0	0	0	0	0	0
0x24	**ADCx_TR2**	Res.	Res.	Res.	Res.	Res.	Res.	Res.	Res.	HT2[[7:0]								Res.	Res.	Res.	Res.	Res.	Res.	Res.	Res.	LT2[7:0]							
	Reset value									1	1	1	1	1	1	1	1									0	0	0	0	0	0	0	0
0x28	**ADCx_TR3**	Res.	Res.	Res.	Res.	Res.	Res.	Res.	Res.	HT3[[7:0]								Res.	Res.	Res.	Res.	Res.	Res.	Res.	Res.	LT3[7:0]							
	Reset value									1	1	1	1	1	1	1	1									0	0	0	0	0	0	0	0
0x2C	Reserved	Res.																															
0x30	**ADCx_SQR1**	Res.	Res.	Res.	SQ4[4:0]					Res.	SQ3[4:0]					Res.	SQ2[4:0]					Res.	SQ1[4:0]					Res.	Res.	L[3:0]			
	Reset value				0	0	0	0	0		0	0	0	0	0		0	0	0	0	0		0	0	0	0	0			0	0	0	0
0x34	**ADCx_SQR2**	Res.	Res.	Res.	SQ9[4:0]					Res.	SQ8[4:0]					Res.	SQ7[4:0]					Res.	SQ6[4:0]					Res.	SQ5[4:0]				
	Reset value				0	0	0	0	0		0	0	0	0	0		0	0	0	0	0		0	0	0	0	0		0	0	0	0	0
0x38	**ADCx_SQR3**	Res.	Res.	Res.	SQ14[4:0]					Res.	SQ13[4:0]					Res.	SQ12[4:0]					Res.	SQ11[4:0]					Res.	SQ10[4:0]				
	Reset value				0	0	0	0	0		0	0	0	0	0		0	0	0	0	0		0	0	0	0	0		0	0	0	0	0
0x3C	**ADCx_SQR4**	Res.	Res.	Res.	Res.	Res.	Res.	Res.	Res.	Res.	Res.	Res.	Res.	Res.	Res.	Res.	Res.	Res.	Res.	Res.	Res.	Res.	SQ16[4:0]					Res.	SQ15[4:0]				
	Reset value																						0	0	0	0	0		0	0	0	0	0
0x40	**ADCx_DR**	Res.	Res.	Res.	Res.	Res.	Res.	Res.	Res.	Res.	Res.	Res.	Res.	Res.	Res.	Res.	Res.	regular RDATA[15:0]															
	Reset value																	0	0	0	0	0	0	0	0	0	0	0	0	0	0	0	0
0x44-0x48	Reserved	Res.																															

Table 71. ADC register map and reset values for each ADC (offset=0x000 for master ADC, 0x100 for slave ADC) (continued)

Offset	Register	31	30	29	28	27	26	25	24	23	22	21	20	19	18	17	16	15	14	13	12	11	10	9	8	7	6	5	4	3	2	1	0
0x4C	**ADCx_JSQR**	Res.	JSQ4[4:0]					Res.	JSQ3[4:0]					Res.	JSQ2[4:0]					Res.	JSQ1[4:0]					JEXTEN[1:0]		JEXTSEL [3:0]				JL[1:0]	
	Reset value		0	0	0	0	0		0	0	0	0	0		0	0	0	0	0		0	0	0	0	0	0	0	0	0	0	0	0	0
0x50-0x5C	Reserved	Res.																															
0x60	**ADCx_OFR1**	OFFSET1_EN	OFFSET1_ CH[4:0]					Res.	Res.	Res.	Res.	Res.	Res.	Res.	Res.	Res.	Res.	Res.	Res.	Res.	Res.	OFFSET1[11:0]											
	Reset value	0	0	0	0	0	0															0	0	0	0	0	0	0	0	0	0	0	0
0x64	**ADCx_OFR2**	OFFSET2_EN	OFFSET2_ CH[4:0]					Res.	Res.	Res.	Res.	Res.	Res.	Res.	Res.	Res.	Res.	Res.	Res.	Res.	Res.	OFFSET2[11:0]											
	Reset value	0	0	0	0	0	0															0	0	0	0	0	0	0	0	0	0	0	0
0x68	**ADCx_OFR3**	OFFSET3_EN	OFFSET3_ CH[4:0]					Res.	Res.	Res.	Res.	Res.	Res.	Res.	Res.	Res.	Res.	Res.	Res.	Res.	Res.	OFFSET3[11:0]											
	Reset value	0	0	0	0	0	0															0	0	0	0	0	0	0	0	0	0	0	0
0x6C	**ADCx_OFR4**	OFFSET4_EN	OFFSET4_ CH[4:0]					Res.	Res.	Res.	Res.	Res.	Res.	Res.	Res.	Res.	Res.	Res.	Res.	Res.	Res.	OFFSET4[11:0]											
	Reset value	0	0	0	0	0	0															0	0	0	0	0	0	0	0	0	0	0	0
0x70-0x7C	Reserved	Res.																															
0x80	**ADCx_JDR1**	Res.	Res.	Res.	Res.	Res.	Res.	Res.	Res.	Res.	Res.	Res.	Res.	Res.	Res.	Res.	Res.	JDATA1[15:0]															
	Reset value																	0	0	0	0	0	0	0	0	0	0	0	0	0	0	0	0
0x84	**ADCx_JDR2**	Res.	Res.	Res.	Res.	Res.	Res.	Res.	Res.	Res.	Res.	Res.	Res.	Res.	Res.	Res.	Res.	JDATA2[15:0]															
	Reset value																	0	0	0	0	0	0	0	0	0	0	0	0	0	0	0	0
0x88	**ADCx_JDR3**	Res.	Res.	Res.	Res.	Res.	Res.	Res.	Res.	Res.	Res.	Res.	Res.	Res.	Res.	Res.	Res.	JDATA3[15:0]															
	Reset value																	0	0	0	0	0	0	0	0	0	0	0	0	0	0	0	0
0x8C	**ADCx_JDR4**	Res.	Res.	Res.	Res.	Res.	Res.	Res.	Res.	Res.	Res.	Res.	Res.	Res.	Res.	Res.	Res.	JDATA4[15:0]															
	Reset value																	0	0	0	0	0	0	0	0	0	0	0	0	0	0	0	0
0x8C-0x9C	Reserved	Res.																															
0xA0	**ADCx_AWD2CR**	Res.	Res.	Res.	Res.	Res.	Res.	Res.	Res.	Res.	Res.	Res.	Res.	Res.	AWD2CH[18:0]																		
	Reset value														0	0	0	0	0	0	0	0	0	0	0	0	0	0	0	0	0	0	0
0xA4	**ADCx_AWD3CR**	Res.	Res.	Res.	Res.	Res.	Res.	Res.	Res.	Res.	Res.	Res.	Res.	Res.	AWD3CH[18:0]																		
	Reset value														0	0	0	0	0	0	0	0	0	0	0	0	0	0	0	0	0	0	0
0xA8-0xAC	Reserved	Res.	Res.	Res.	Res.	Res.	Res.	Res.	Res.	Res.	Res.	Res.	Res.	Res.	Res.	Res.	Res.	Res.	Res.	Res.	Res.	Res.	Res.	Res.	Res.	Res.	Res.	Res.	Res.	Res.	Res.	Res.	Res.
0xB0	**ADCx_DIFSEL**	Res.	Res.	Res.	Res.	Res.	Res.	Res.	Res.	Res.	Res.	Res.	Res.	Res.	DIFSEL[18:0]																		
	Reset value														0	0	0	0	0	0	0	0	0	0	0	0	0	0	0	0	0	0	0

Table 71. ADC register map and reset values for each ADC (offset=0x000 for master ADC, 0x100 for slave ADC) (continued)

Offset	Register	31	30	29	28	27	26	25	24	23	22	21	20	19	18	17	16	15	14	13	12	11	10	9	8	7	6	5	4	3	2	1	0
0xB4	**ADCx_CALFACT**	Res.	Res.	Res.	Res.	Res.	Res.	Res.	Res.	Res.	CALFACT_D[6:0]							Res.	Res.	Res.	Res.	Res.	Res.	Res.	Res.	Res.	CALFACT_S[6:0]						
	Reset value										0	0	0	0	0	0	0										0	0	0	0	0	0	0

Table 72. ADC register map and reset values (master and slave ADC common registers) offset =0x300)

Offset	Register	31	30	29	28	27	26	25	24	23	22	21	20	19	18	17	16	15	14	13	12	11	10	9	8	7	6	5	4	3	2	1	0
0x00	**ADCx_CSR**	Res.	Res.	Res.	Res.	Res.	JQOVF_SLV	AWD3_SLV	AWD2_SLV	AWD1_SLV	JEOS_SLV	JEOC_SLV	OVR_SLV	EOS_SLV	EOC_SLV	EOSMP_SLV	ADRDY_SLV	Res.	Res.	Res.	Res.	Res.	JQOVF_MST	AWD3_MST	AWD2_MST	AWD1_MST	JEOS_MST	JEOC_MST	OVR_MST	EOS_MST	EOC_MST	EOSMP_MST	ADRDY_MST
							slave ADC2																master ADC1										
	Reset value						0	0	0	0	0	0	0	0	0	0	0						0	0	0	0	0	0	0	0	0	0	0
0x04	Reserved	Res.																															
0x08	**ADCx_CCR**	Res.	Res.	Res.	Res.	Res.	Res.	Res.	CH18SEL	CH17SEL	VREFEN	PRESC[3:0]				CKMODE[1:0]		MDMA[1:0]		DMACFG	Res.	DELAY[3:0]				Res.	Res.	Res.	DUAL[4:0]				
	Reset value								0	0	0	0	0	0	0	0	0	0	0	0		0	0	0	0				0	0	0	0	0
0x0C	**ADCx_CDR**	RDATA_SLV[15:0]																RDATA_MST[15:0]															
	Reset value	0	0	0	0	0	0	0	0	0	0	0	0	0	0	0	0	0	0	0	0	0	0	0	0	0	0	0	0	0	0	0	0

Refer to *Section 2.2.2: Memory map and register boundary addresses* for the register boundary addresses.

17 Digital-to-analog converter (DAC)

17.1 Introduction

The DAC module is a 12-bit, voltage output digital-to-analog converter. The DAC can be configured in 8- or 12-bit mode and may be used in conjunction with the DMA controller. In 12-bit mode, the data could be left- or right-aligned. The DAC has two output channels, each with its own converter. In dual DAC channel mode, conversions could be done independently or simultaneously when both channels are grouped together for synchronous update operations. An input reference pin, V_{REF+} (shared with others analog peripherals) is available for better resolution.

The DAC_OUTx pin can be used as general purpose Input/Output (GPIO) when the DAC output is disconnected from output pad and connected to on chip peripheral. The DAC's output buffer can be optionally enabled to allow a high drive output current. An individual calibration can be applied on each DAC's output channel. The DAC output channels support a low power mode; the sample and hold mode.

17.2 DAC main features

The DAC main features are the following (see *Figure 111: DAC channel block diagram*)

- Two DAC converters: one output channel each
- Left or right data alignment in 12-bit mode
- Synchronized update capability
- Noise-wave and Triangular-wave generation
- Dual DAC channel for independent or simultaneous conversions
- DMA capability for each channel including DMA underrun error detection
- External triggers for conversion
- DAC output channel buffered/unbuffered modes
- buffer offset calibration
- Each DAC output can be disconnected from the DAC_OUTx output pin
- DAC output connection to on chip peripherals
- Sample and hold mode for low power operation in Stop mode
- Input voltage reference, V_{REF+}

Figure 111 shows the block diagram of a DAC channel and *Table 73* gives the pin description.

17.3 DAC functional description

17.3.1 DAC block diagram

Figure 111. DAC channel block diagram

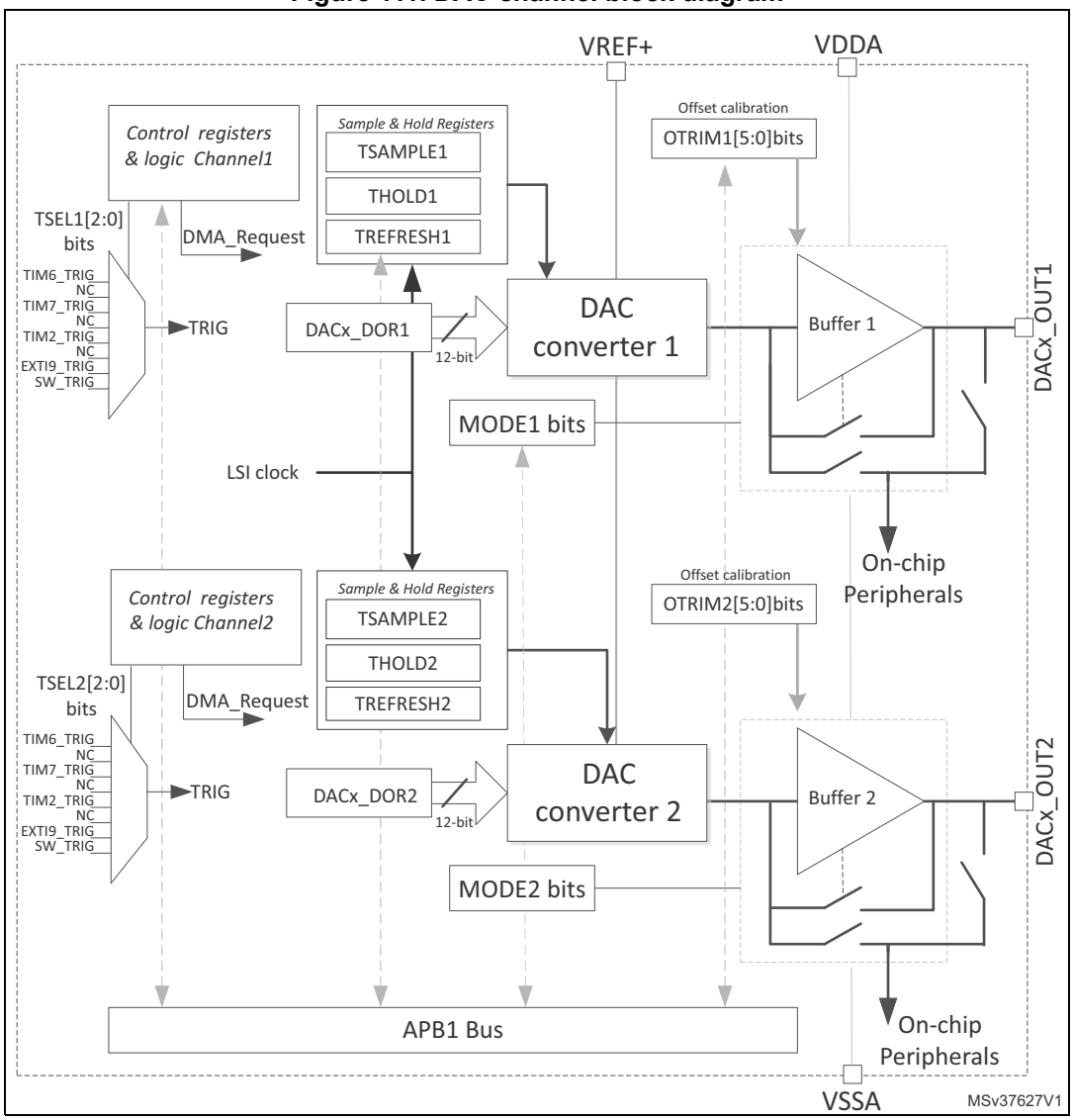

1. The output mode controller switches between the normal mode in buffer/unbuffered configuration and the Sample and Hold mode.

The DAC includes:

- Two output channels
- The DAC_OUTx can be disconnected from output pin and used as ordinary GPIO
- The DAC_OUTx can used internal pin connection to on-chip peripherals such as comparators and OPAMPs.
- DAC output channel buffered or non buffered
- Sample and hold block and registers using LSI clock source and operational in Stop mode for static conversion

Table 73. DAC pins

Name	Signal type	Remarks
V_{REF+}	Input, analog reference positive	The higher/positive reference voltage for the DAC, $V_{DDAmin} \leq V_{REF+} \leq V_{DDA}$ (refer to datasheet)
V_{DDA}	Input, analog supply	Analog power supply
V_{SSA}	Input, analog supply ground	Ground for analog power supply
DAC_OUTx	Analog output signal	DAC channelx analog output

17.3.2 DAC channel enable

Each DAC channel can be powered on by setting its corresponding ENx bit in the DAC_CR register. The DAC channel is then enabled after a startup time t_{WAKEUP}.

Note: The ENx bit enables the analog DAC Channelx only. The DAC Channelx digital interface is enabled even if the ENx bit is reset.

17.3.3 DAC data format

Depending on the selected configuration mode, the data have to be written into the specified register as described below:

- Single DAC channelx, there are three possibilities:
  - 8-bit right alignment: the software has to load data into the DAC_DHR8Rx [7:0] bits (stored into the DHRx[11:4] bits)
  - 12-bit left alignment: the software has to load data into the DAC_DHR12Lx [15:4] bits (stored into the DHRx[11:0] bits)
  - 12-bit right alignment: the software has to load data into the DAC_DHR12Rx [11:0] bits (stored into the DHRx[11:0] bits)

Depending on the loaded DAC_DHRyyyx register, the data written by the user is shifted and stored into the corresponding DHRx (data holding registerx, which are internal non-memory-mapped registers). The DHRx register is then loaded into the DORx register either automatically, by software trigger or by an external event trigger.

Figure 112. Data registers in single DAC channel mode

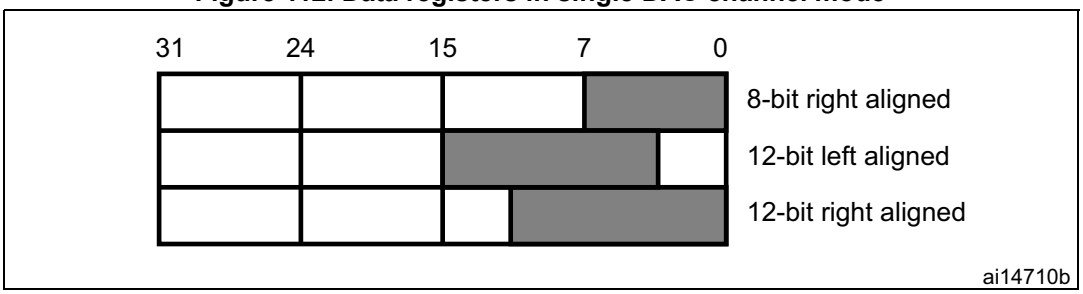

- Dual DAC channels, there are three possibilities:
  - 8-bit right alignment: data for DAC channel1 to be loaded into the DAC_DHR8RD [7:0] bits (stored into the DHR1[11:4] bits) and data for DAC channel2 to be loaded into the DAC_DHR8RD [15:8] bits (stored into the DHR2[11:4] bits)
  - 12-bit left alignment: data for DAC channel1 to be loaded into the DAC_DHR12LD [15:4] bits (stored into the DHR1[11:0] bits) and data for DAC channel2 to be

loaded into the DAC_DHR12LD [31:20] bits (stored into the DHR2[11:0] bits)

– 12-bit right alignment: data for DAC channel1 to be loaded into the DAC_DHR12RD [11:0] bits (stored into the DHR1[11:0] bits) and data for DAC channel2 to be loaded into the DAC_DHR12RD [27:16] bits (stored into the DHR2[11:0] bits)

Depending on the loaded DAC_DHRyyyD register, the data written by the user is shifted and stored into DHR1 and DHR2 (data holding registers, which are internal non-memory-mapped registers). The DHR1 and DHR2 registers are then loaded into the DOR1 and DOR2 registers, respectively, either automatically, by software trigger or by an external event trigger.

Figure 113. Data registers in dual DAC channel mode

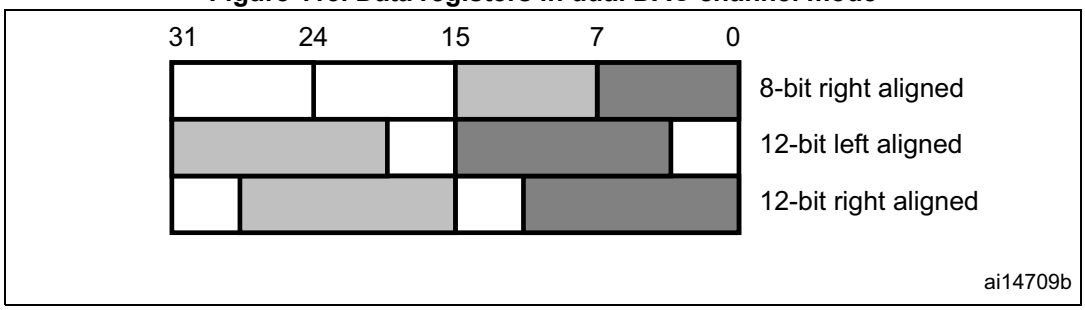

17.3.4 DAC conversion

The DAC_DORx cannot be written directly and any data transfer to the DAC channelx must be performed by loading the DAC_DHRx register (write to DAC_DHR8Rx, DAC_DHR12Lx, DAC_DHR12Rx, DAC_DHR8RD, DAC_DHR12RD or DAC_DHR12LD).

Data stored in the DAC_DHRx register are automatically transferred to the DAC_DORx register after one APB1 clock cycle, if no hardware trigger is selected (TENx bit in DAC_CR register is reset). However, when a hardware trigger is selected (TENx bit in DAC_CR register is set) and a trigger occurs, the transfer is performed three APB1 clock cycles later.

When DAC_DORx is loaded with the DAC_DHRx contents, the analog output voltage becomes available after a time $t_{SETTLING}$ that depends on the power supply voltage and the analog output load.

Figure 114. Timing diagram for conversion with trigger disabled TEN = 0

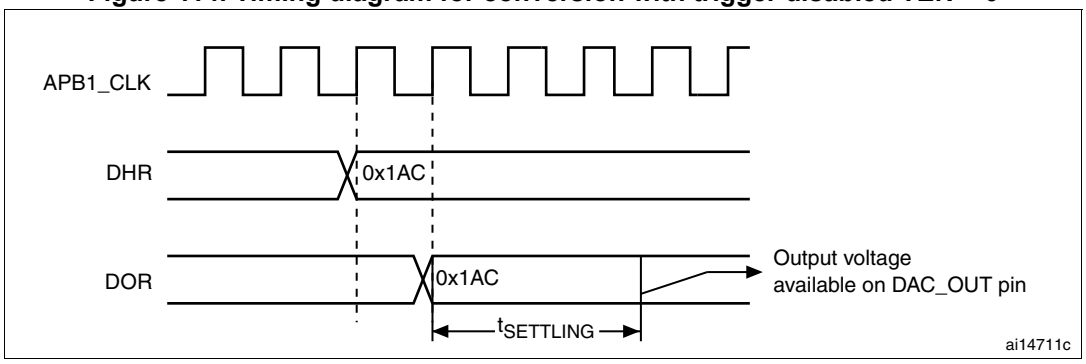

17.3.5 DAC output voltage

Digital inputs are converted to output voltages on a linear conversion between 0 and V_{REF+}.

The analog output voltages on each DAC channel pin are determined by the following equation:

$$DACoutput = V_{REF} \times \frac{DOR}{4096}$$

17.3.6 DAC trigger selection

If the TENx control bit is set, conversion can then be triggered by an external event (timer counter, external interrupt line). The TSELx[2:0] control bits determine which out of 8 possible events will trigger conversion as shown in bits TSEL1[2:0] and TSEL2[2:0] in *Section 17.5.1: DAC control register (DAC_CR)*.

Each time a DAC interface detects a rising edge on the selected timer TRGO output, or on the selected external interrupt line 9, the last data stored into the DAC_DHRx register are transferred into the DAC_DORx register. The DAC_DORx register is updated three APB1 cycles after the trigger occurs.

If the software trigger is selected, the conversion starts once the SWTRIG bit is set. SWTRIG is reset by hardware once the DAC_DORx register has been loaded with the DAC_DHRx register contents.

Note: 1 TSELx[2:0] bit cannot be changed when the ENx bit is set.

2 When software trigger is selected, the transfer from the DAC_DHRx register to the DAC_DORx register takes only one APB clock cycle.

17.3.7 DMA request

Each DAC channel has a DMA capability. Two DMA channels are used to service DAC channel DMA requests.

A DAC DMA request is generated when an external trigger (but not a software trigger) occurs while the DMAENx bit is set. The value of the DAC_DHRx register is then transferred into the DAC_DORx register.
In dual mode, if both DMAENx bits are set, two DMA requests are generated. If only one DMA request is needed, you should set only the corresponding DMAENx bit. In this way, the application can manage both DAC channels in dual mode by using one DMA request and a unique DMA channel.

DMA underrun

The DAC DMA request is not queued so that if a second external trigger arrives before the acknowledgement for the first external trigger is received (first request), then no new request is issued and the DMA channelx underrun flag DMAUDRx in the DAC_SR register is set, reporting the error condition. The DAC channelx continues to convert old data.

The software should clear the DMAUDRx flag by writing “1”, clear the DMAEN bit of the used DMA stream and re-initialize both DMA and DAC channelx to restart the transfer correctly. The software should modify the DAC trigger conversion frequency or lighten the DMA workload to avoid a new DMA underrun. Finally, the DAC conversion could be resumed by enabling both DMA data transfer and conversion trigger.

For each DAC channlex, an interrupt is also generated if its corresponding DMAUDRIEx bit in the DAC_CR register is enabled.

17.3.8 Noise generation

In order to generate a variable-amplitude pseudonoise, an LFSR (linear feedback shift register) is available. DAC noise generation is selected by setting WAVEx[1:0] to “01”. The preloaded value in LFSR is 0xAAA. This register is updated three APB1 clock cycles after each trigger event, following a specific calculation algorithm.

Figure 115. DAC LFSR register calculation algorithm

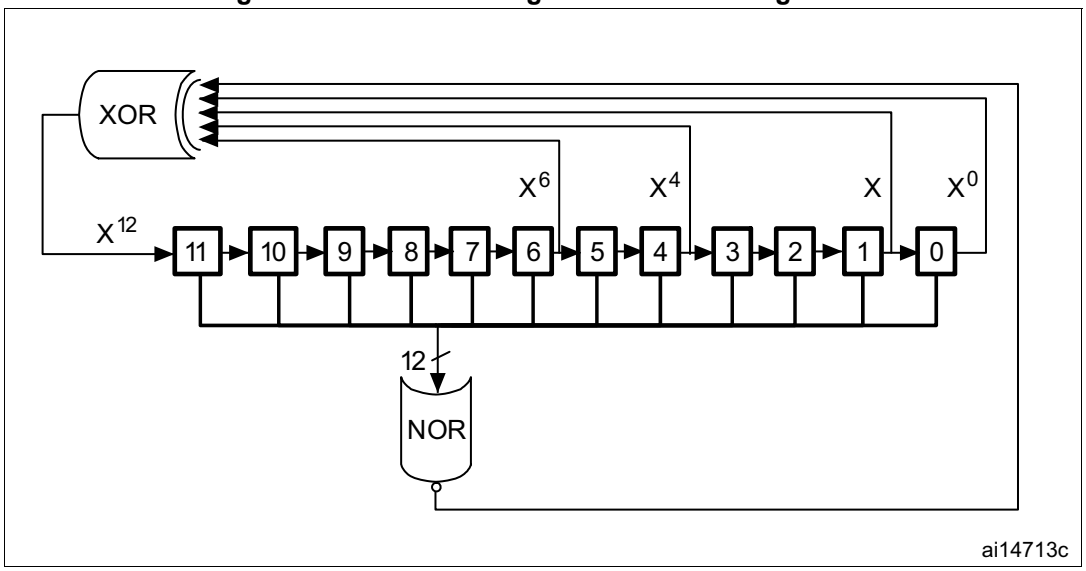

The LFSR value, that may be masked partially or totally by means of the MAMPx[3:0] bits in the DAC_CR register, is added up to the DAC_DHRx contents without overflow and this value is then transferred into the DAC_DORx register.

If LFSR is 0x0000, a ‘1 is injected into it (antilock-up mechanism).

It is possible to reset LFSR wave generation by resetting the WAVEx[1:0] bits.

Figure 116. DAC conversion (SW trigger enabled) with LFSR wave generation

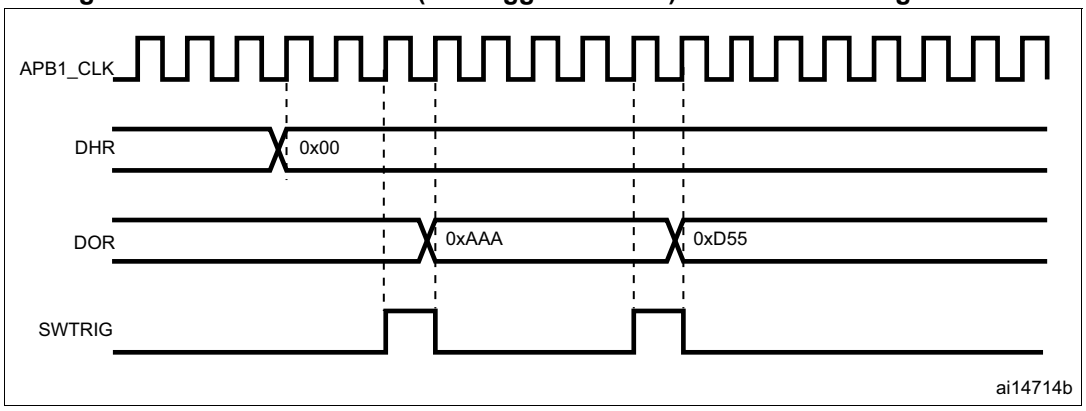

Note: The DAC trigger must be enabled for noise generation by setting the TENx bit in the DAC_CR register.

17.3.9 Triangle-wave generation

It is possible to add a small-amplitude triangular waveform on a DC or slowly varying signal. DAC triangle-wave generation is selected by setting WAVEx[1:0] to “10”. The amplitude is configured through the MAMPx[3:0] bits in the DAC_CR register. An internal triangle counter is incremented three APB1 clock cycles after each trigger event. The value of this counter is then added to the DAC_DHRx register without overflow and the sum is transferred into the DAC_DORx register. The triangle counter is incremented as long as it is less than the maximum amplitude defined by the MAMPx[3:0] bits. Once the configured amplitude is reached, the counter is decremented down to 0, then incremented again and so on.

It is possible to reset triangle wave generation by resetting the WAVEx[1:0] bits.

Figure 117. DAC triangle wave generation

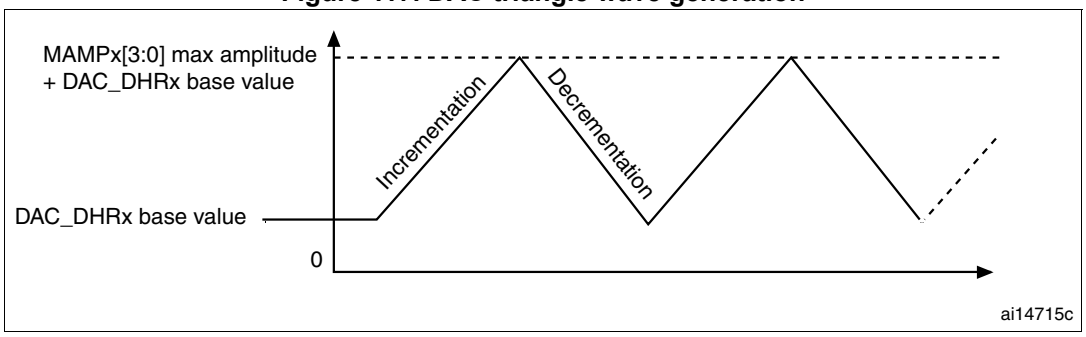

Figure 118. DAC conversion (SW trigger enabled) with triangle wave generation

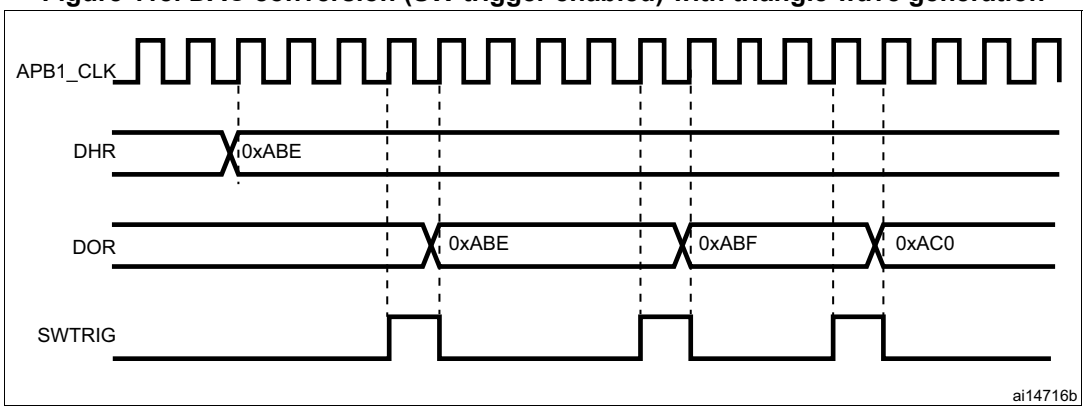

Note: 1 The DAC trigger must be enabled for noise generation by setting the TENx bit in the DAC_CR register.

2 The MAMPx[3:0] bits must be configured before enabling the DAC, otherwise they cannot be changed.

17.3.10 DAC channel modes

Each DAC channel can be configured in normal mode or sample and hold mode. The output buffer can be enabled to allow a high drive capability. Before enabling output buffer, the voltage offset needs to be calibrated. This calibration is performed at the factory (loaded after reset) and can be adjusted by software during application operation.

Normal Mode

In normal mode, there are four combinations, by changing the buffer state and by changing the DAC_OUTx pin interconnections.

To enable the output buffer, the MODEx[2:0] bits in DAC_MCR register should be:

- 000: DAC is connected to the external pin
- 001: DAC is connected to external pin and to on-chip peripherals

To disable the output buffer, the MODEx[2:0] bits in DAC_MCR register should be:

- 010: DAC is connected to the external pin
- 011: DAC is connected to on-chip peripherals

Sample and Hold mode

In sample and Hold mode, the DAC core converts data on a triggered conversion, then, holds the converted voltage on a capacitor. When not converting, the DAC cores and buffer are completely turned off between samples and the DAC output is tri-stated, therefore reducing the overall power consumption. A new stabilization period ($T_{stab\text{-}BON}$ or $T_{stab\text{-}BOFF}$ depending on buffer state) is needed before each new conversion.

In this mode, the DAC core and all corresponding logic and registers are driven by the low-speed clock (LSI: Low Speed Internal oscillator) in addition to the APB bus clock, allowing to use the DAC channels in deep low power modes such as Stop mode.

The sample/hold mode operations can be divided into 3 phases:

1. Sample phase: the sample/hold element is charged to the desired voltage. The charging time depends on capacitor value (internal or external, selected by the user). The sampling time is configured with the TSAMx[9:0] bits in DAC_SHSRx register. During the write of the TSAMx[9:0] bits; the BWSTx bit in DAC_SR register is set to 1 to synchronize between both clocks domains (APB and low speed clock) and allowing the software to change the value of sample phase during the DAC channel operation
2. Hold phase: the DAC output channel is tri-stated, the DAC core and the buffer are turned off, to reduce the current consumption. The hold time is configured with the THOLDx[9:0] bits in DAC_SHHR register
3. Refresh phase: the refresh time is configured with the TREFx[7:0] bits in DAC_SHRR register

The timings for the three phases above are in units of LSI clocks. As example, to configure a Sample time of 350µs, Hold time of 2ms and Refresh time of 100µs assuming LSI ~32KHz is selected:

12 cycles are required for sample phase: SAMx[9:0] = 11, 62 cycles are required for hold phase: THOLDx[9:0] = 62, and 4 cycles are required for refresh period: TREFx[7:0] = 4.

In this example, the power consumption is reduced by almost a factor of 15 versus Normal modes.

The Formulas to compute the right sample and refresh timings are described in the table below, the Hold time depends on the leakage current.

Table 74. Sample and refresh timings

Buffer State	$t_{sampling}$ (1)(3)	$t_{refresh}$ (2)(3)
Enable	$T_{stab\text{-}BON} + (10*R_{BON}*C_{load})$	$T_{stab\text{-}BON} + (R_{BON}*C_{load})*\ln(2*N_{lsb})$
Disable	$T_{stab\text{-}BOFF} + (10*R_{BOFF}*C_{load})$	$T_{stab\text{-}BOFF} + (R_{BOFF}*C_{load})*\ln(2*N_{lsb})$

Note: 1 In the above formula the settling to the desired code value with ½ LSB or accuracy requires 10 constant time for 12 bits resolution. For 8 bits resolution, the settling time is 7 constant time.

*2 The tolerated voltage drop during the hold phase "Vd" is represented by the number of LSBs after the capacitor discharging with the output leakage current. The settling back to the desired value with ½ LSB error accuracy requires ln(2*Nlsb) constant time of the DAC.*

3 The parameters "$T_{stab\text{-}BON}$", "$T_{stab\text{-}BON}$", "R_{BON}" and "R_{BOFF}" are specified in the datasheet

Example of the sample and refresh time calculation with output buffer on

Note: The values used in the example below are provided as indication only. Please refer to the product datasheet for product data.

C_{load} = 100 nF

V_{DDA} = 3.0 V

Sampling phase:

$t_{sampling}$ = 7 µs + (10 * 2000 * 100 * 10^{-9}) = 2.007 ms
(where $T_{stab\text{-}BON}$ = 7 µs, RBON = 2 kΩ)

Refresh phase:

$t_{refresh}$ = 7 µs + (2000 * 100 * 10^{-9}) * ln(2*10) = 606.1 µs
(where N_{lsb} = 10 (10 LSB drop during the hold phase)

Hold phase:

$D_v = i_{leak} * t_{hold} / C_{load}$ = 0.0073 V (10 LSB of 12bit at 3 V)
i_{leak} = 150 nA (worst case on the IO leakage on all the temperature range)
t_{hold} = 0.0073 * 100 * 10^{-9} / (150 * 10^{-9}) = 4.867 ms

Figure 119. DAC sample and hold mode phase diagram

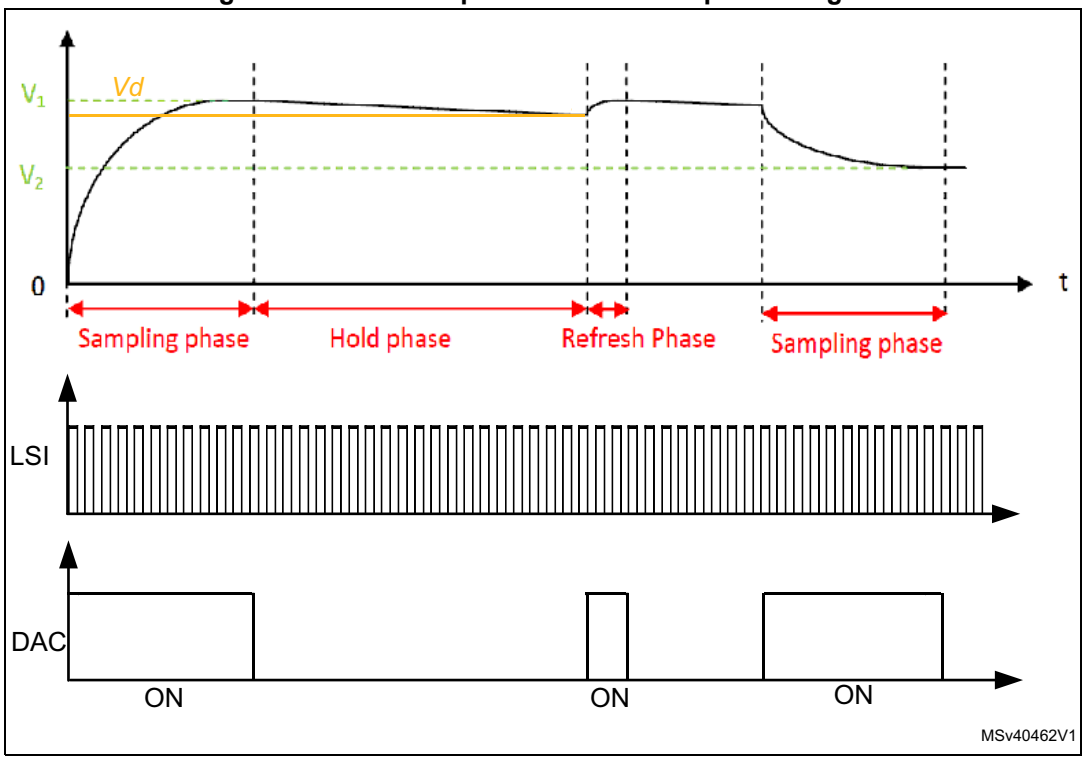

Like in normal mode, the sample and hold mode has different configurations.

To enable the output buffer, the MODEx[2:0] bits in DAC_MCR register should be:

- 100: DAC is connected to the external pin
- 101: DAC is connected to external pin and to on chip peripherals

To disabled the output buffer, The MODEx[2:0] bits in DAC_MCR register should be:

- 110: DAC is connected to external pin and to on chip peripherals
- 111: DAC is connected to on chip peripherals

When MODEx[2:0] bits in DAC_MCR register is equal to 111. An internal capacitor “$C_{loadint}$“ will hold the voltage output of the DAC Core and then drive it to on-chip peripherals.

All sample and hold phases are interruptible and any change in DAC_DHRx will trigger immediately a new sample phase.

Table 75. Channel output modes summary

MODEx[2:0]			Mode	Buffer	Output connections
0	0	0	Normal mode	Enabled	Connected to external pin
0	0	1			Connected to external pin and to on chip-peripherals (ex, comparators)
0	1	0		Disabled	Connected to external pin
0	1	1			Connected to on chip peripherals (ex, comparators)

Table 75. Channel output modes summary (continued)

MODEx[2:0]			Mode	Buffer	Output connections
1	0	0	Sample & hold mode	Enabled	Connected to external pin
1	0	1			Connected to external pin and to on chip peripherals (ex, comparators)
1	1	0		Disabled	Connected to external pin and to on chip peripherals (ex, comparators)
1	1	1			Connected to on chip peripherals (ex, comparators)

17.3.11 DAC channel buffer calibration

The transfer function for an N-bit digital-to-analog converter (DAC) is:

$$V_{out} = ((D / 2^{N-1}) \times G \times V_{ref}) + V_{OS}$$

Where V_{out} is the analog output, D is the digital input, G is the gain, V_{ref} is the nominal full-scale voltage, and V_{os} is the offset voltage.For an ideal DAC channel, G = 1 and V_{os} = 0.

Due to output buffer characteristics, the voltage offset may differ from part-to-part and introduce an absolute offset error on the analog output. To compensate the V_{os}, a calibration is required by a trimming technique.

The calibration is only valid when the DAC channelx is operating with buffer enabled (MODEx[2:0] = 000b or 001b or 100b or 101b). if applied in other modes when the buffer is off, it has no effect. During the calibration:

- The buffer output will be disconnected from the pin internal/external connections and put in tristate mode (HiZ),
- The buffer will act as a comparator, to sense the middle-code value 0x800 and compare it to VREF+/2 signal thru an internal bridge, then toggle its output signal to 0 or 1 depending on the comparison result (CAL_FLAGx bit)

Two calibration techniques are provided:

- Factory trimming (always enabled)

The DAC buffer offset is factory trimmed. The default value of OTRIMx[4:0] bits in DAC_CCR register is the factory trimming value and it is loaded once DAC digital interface is reset.

- User trimming

The user trimming can be done when the operating conditions differs from nominal factory trimming conditions and in particular when VDD/VDDA voltage, temperature, VREF+ values change and can be done at any point during application by software.

Note: Refer to the datasheet for more details of the Nominal factory trimming conditions

Note: Also, when VDD/VDDA is removed (exemple the MCU enters in STANDBY or VBAT modes) the calibration is required.
The steps to perform a user trimming calibration are as below:

1. If the DAC channel is active, Write 0 to ENx bit in DAC_CR to disable the channel.
2. Select a mode where the buffer is enabled, by writing to DACx_MCR register, MODEx[2:0] = 000b or 001b or 100b or 101b,
3. Start the DAC channelx calibration, by setting the CENx bit in DACx_CR register to 1,
4. Apply a trimming algorithm:
   a) Write a code into OTRIMx[4:0] bits, starting by 00000b
   b) Wait for tOFFTRIMmax delay
   c) Check if CAL_FLAGx bit in DACx_SR is set to 1
   d) if CAL_FLAGx is set to 1 the trimming code OTRIMx[4:0] is found and will be used during operation to compensate the output value, else increment OTRIMx[4:0] and repeat sub-steps from (a) to (d) again.

The software algorithm may use either a successive approximation or dichotomy techniques to compute and set the content of OTRIMx[4:0] bits in a faster way,

The commutation/toggle of CAL_FLAGx bit indicates that the offset is correctly compensated and the corresponding trim code must be kept in the OTRIMx[4:0] bits in DAC_CCR register.

Note: 1 A tOFFTRIMmax delay must be respected between the write to the OTRIMx[4:0] bits and the read of the CAL_FLAGx bit in DAC_SR register in order to get a correct value.This parameter is specified into datasheet electrical characteristics section.

2 If the VDD/VDDA, VREF+ and temperature conditions will not change during the MCU operation while it enters more often in standby and VBAT mode, the software may store the OTRIMx[4:0] bits found in the first user calibration in the flash or in back-up registers. then to load/write them directly when the MCU power is back again thus avoiding to wait for a new calibration time.

17.3.12 Dual DAC channel conversion

To efficiently use the bus bandwidth in applications that require the two DAC channels at the same time, three dual registers are implemented: DHR8RD, DHR12RD and DHR12LD. A unique register access is then required to drive both DAC channels at the same time.

Eleven possible conversion modes are possible using the two DAC channels and these dual registers. All the conversion modes can nevertheless be obtained using separate DHRx registers if needed.

All modes are described in the paragraphs below.

Independent trigger without wave generation

To configure the DAC in this conversion mode, the following sequence is required:

- Set the two DAC channel trigger enable bits TEN1 and TEN2
- Configure different trigger sources by setting different values in the TSEL1[2:0] and TSEL2[2:0] bits
- Load the dual DAC channel data into the desired DHR register (DAC_DHR12RD, DAC_DHR12LD or DAC_DHR8RD)

When a DAC channel1 trigger arrives, the DHR1 register is transferred into DAC_DOR1 (three APB1 clock cycles later).

When a DAC channel2 trigger arrives, the DHR2 register is transferred into DAC_DOR2 (three APB1 clock cycles later).

Independent trigger with single LFSR generation

To configure the DAC in this conversion mode, the following sequence is required:

- Set the two DAC channel trigger enable bits TEN1 and TEN2
- Configure different trigger sources by setting different values in the TSEL1[2:0] and TSEL2[2:0] bits
- Configure the two DAC channel WAVEx[1:0] bits as “01” and the same LFSR mask value in the MAMPx[3:0] bits
- Load the dual DAC channel data into the desired DHR register (DHR12RD, DHR12LD or DHR8RD)

When a DAC channel1 trigger arrives, the LFSR1 counter, with the same mask, is added to the DHR1 register and the sum is transferred into DAC_DOR1 (three APB clock cycles later). Then the LFSR1 counter is updated.

When a DAC channel2 trigger arrives, the LFSR2 counter, with the same mask, is added to the DHR2 register and the sum is transferred into DAC_DOR2 (three APB clock cycles later). Then the LFSR2 counter is updated.

Independent trigger with different LFSR generation

To configure the DAC in this conversion mode, the following sequence is required:

- Set the two DAC channel trigger enable bits TEN1 and TEN2
- Configure different trigger sources by setting different values in the TSEL1[2:0] and TSEL2[2:0] bits
- Configure the two DAC channel WAVEx[1:0] bits as “01” and set different LFSR masks values in the MAMP1[3:0] and MAMP2[3:0] bits
- Load the dual DAC channel data into the desired DHR register (DAC_DHR12RD, DAC_DHR12LD or DAC_DHR8RD)

When a DAC channel1 trigger arrives, the LFSR1 counter, with the mask configured by MAMP1[3:0], is added to the DHR1 register and the sum is transferred into DAC_DOR1 (three APB clock cycles later). Then the LFSR1 counter is updated.

When a DAC channel2 trigger arrives, the LFSR2 counter, with the mask configured by MAMP2[3:0], is added to the DHR2 register and the sum is transferred into DAC_DOR2 (three APB clock cycles later). Then the LFSR2 counter is updated.

Independent trigger with single triangle generation

To configure the DAC in this conversion mode, the following sequence is required:

- Set the two DAC channel trigger enable bits TEN1 and TEN2
- Configure different trigger sources by setting different values in the TSEL1[2:0] and TSEL2[2:0] bits
- Configure the two DAC channel WAVEx[1:0] bits as “1x” and the same maximum amplitude value in the MAMPx[3:0] bits
- Load the dual DAC channel data into the desired DHR register (DAC_DHR12RD, DAC_DHR12LD or DAC_DHR8RD)

When a DAC channel1 trigger arrives, the DAC channel1 triangle counter, with the same triangle amplitude, is added to the DHR1 register and the sum is transferred into DAC_DOR1 (three APB1 clock cycles later). The DAC channel1 triangle counter is then updated.

When a DAC channel2 trigger arrives, the DAC channel2 triangle counter, with the same triangle amplitude, is added to the DHR2 register and the sum is transferred into DAC_DOR2 (three APB1 clock cycles later). The DAC channel2 triangle counter is then updated.

Independent trigger with different triangle generation

To configure the DAC in this conversion mode, the following sequence is required:

- Set the two DAC channel trigger enable bits TEN1 and TEN2
- Configure different trigger sources by setting different values in the TSEL1[2:0] and TSEL2[2:0] bits
- Configure the two DAC channel WAVEx[1:0] bits as “1x” and set different maximum amplitude values in the MAMP1[3:0] and MAMP2[3:0] bits
- Load the dual DAC channel data into the desired DHR register (DAC_DHR12RD, DAC_DHR12LD or DAC_DHR8RD)

When a DAC channel1 trigger arrives, the DAC channel1 triangle counter, with a triangle amplitude configured by MAMP1[3:0], is added to the DHR1 register and the sum is transferred into DAC_DOR1 (three APB1 clock cycles later). The DAC channel1 triangle counter is then updated.

When a DAC channel2 trigger arrives, the DAC channel2 triangle counter, with a triangle amplitude configured by MAMP2[3:0], is added to the DHR2 register and the sum is transferred into DAC_DOR2 (three APB1 clock cycles later). The DAC channel2 triangle counter is then updated.

Simultaneous software start

To configure the DAC in this conversion mode, the following sequence is required:

- Load the dual DAC channel data to the desired DHR register (DAC_DHR12RD, DAC_DHR12LD or DAC_DHR8RD)

In this configuration, one APB1 clock cycle later, the DHR1 and DHR2 registers are transferred into DAC_DOR1 and DAC_DOR2, respectively.

Simultaneous trigger without wave generation

To configure the DAC in this conversion mode, the following sequence is required:

- Set the two DAC channel trigger enable bits TEN1 and TEN2
- Configure the same trigger source for both DAC channels by setting the same value in the TSEL1[2:0] and TSEL2[2:0] bits
- Load the dual DAC channel data to the desired DHR register (DAC_DHR12RD, DAC_DHR12LD or DAC_DHR8RD)

When a trigger arrives, the DHR1 and DHR2 registers are transferred into DAC_DOR1 and DAC_DOR2, respectively (after three APB1 clock cycles).

Simultaneous trigger with single LFSR generation

To configure the DAC in this conversion mode, the following sequence is required:

- Set the two DAC channel trigger enable bits TEN1 and TEN2
- Configure the same trigger source for both DAC channels by setting the same value in the TSEL1[2:0] and TSEL2[2:0] bits
- Configure the two DAC channel WAVEx[1:0] bits as “01” and the same LFSR mask value in the MAMPx[3:0] bits
- Load the dual DAC channel data to the desired DHR register (DHR12RD, DHR12LD or DHR8RD)

When a trigger arrives, the LFSR1 counter, with the same mask, is added to the DHR1 register and the sum is transferred into DAC_DOR1 (three APB1 clock cycles later). The LFSR1 counter is then updated. At the same time, the LFSR2 counter, with the same mask, is added to the DHR2 register and the sum is transferred into DAC_DOR2 (three APB1 clock cycles later). The LFSR2 counter is then updated.

Simultaneous trigger with different LFSR generation

To configure the DAC in this conversion mode, the following sequence is required:

- Set the two DAC channel trigger enable bits TEN1 and TEN2
- Configure the same trigger source for both DAC channels by setting the same value in the TSEL1[2:0] and TSEL2[2:0] bits
- Configure the two DAC channel WAVEx[1:0] bits as “01” and set different LFSR mask values using the MAMP1[3:0] and MAMP2[3:0] bits
- Load the dual DAC channel data into the desired DHR register (DAC_DHR12RD, DAC_DHR12LD or DAC_DHR8RD)

When a trigger arrives, the LFSR1 counter, with the mask configured by MAMP1[3:0], is added to the DHR1 register and the sum is transferred into DAC_DOR1 (three APB1 clock cycles later). The LFSR1 counter is then updated.
At the same time, the LFSR2 counter, with the mask configured by MAMP2[3:0], is added to the DHR2 register and the sum is transferred into DAC_DOR2 (three APB1 clock cycles later). The LFSR2 counter is then updated.

Simultaneous trigger with single triangle generation

To configure the DAC in this conversion mode, the following sequence is required:

- Set the two DAC channel trigger enable bits TEN1 and TEN2
- Configure the same trigger source for both DAC channels by setting the same value in the TSEL1[2:0] and TSEL2[2:0] bits
- Configure the two DAC channel WAVEx[1:0] bits as “1x” and the same maximum amplitude value using the MAMPx[3:0] bits
- Load the dual DAC channel data into the desired DHR register (DAC_DHR12RD, DAC_DHR12LD or DAC_DHR8RD)

When a trigger arrives, the DAC channel1 triangle counter, with the same triangle amplitude, is added to the DHR1 register and the sum is transferred into DAC_DOR1 (three APB1 clock cycles later). The DAC channel1 triangle counter is then updated.
At the same time, the DAC channel2 triangle counter, with the same triangle amplitude, is added to the DHR2 register and the sum is transferred into DAC_DOR2 (three APB1 clock cycles later). The DAC channel2 triangle counter is then updated.

17.3.13 Simultaneous trigger with different triangle generation

To configure the DAC in this conversion mode, the following sequence is required:

- Set the two DAC channel trigger enable bits TEN1 and TEN2
- Configure the same trigger source for both DAC channels by setting the same value in the TSEL1[2:0] and TSEL2[2:0] bits
- Configure the two DAC channel WAVEx[1:0] bits as “1x” and set different maximum amplitude values in the MAMP1[3:0] and MAMP2[3:0] bits
- Load the dual DAC channel data into the desired DHR register (DAC_DHR12RD, DAC_DHR12LD or DAC_DHR8RD)

When a trigger arrives, the DAC channel1 triangle counter, with a triangle amplitude configured by MAMP1[3:0], is added to the DHR1 register and the sum is transferred into DAC_DOR1 (three APB clock cycles later). Then the DAC channel1 triangle counter is updated.
At the same time, the DAC channel2 triangle counter, with a triangle amplitude configured by MAMP2[3:0], is added to the DHR2 register and the sum is transferred into DAC_DOR2 (three APB1 clock cycles later). Then the DAC channel2 triangle counter is updated.

17.4 DAC low-power modes

Table 76. Effect of low-power modes on DAC

Mode	Description
Sleep	No effect, DAC used with DMA
Low-power run	No effect.
Low-power sleep	No effect. DAC used with DMA.
Stop 0 / Stop 1	DAC remains active with a static value, if sample and hold mode is selected using LSI clock
Stop 2	The DAC registers content is kept. The DAC must be disabled before entering Stop 2.
Standby	The DAC peripheral is powered down and must be reinitialized after exiting Standby or Shutdown mode.
Shutdown	

17.5 DAC registers

Refer to *Section 1 on page 55* for a list of abbreviations used in register descriptions.

The peripheral registers have to be accessed by words (32-bit).

17.5.1 DAC control register (DAC_CR)

Address offset: 0x00

Reset value: 0x0000 0000

31	30	29	28	27	26	25	24	23	22	21	20	19	18	17	16
Res.	CEN2	DMAUDRIE2	DMAEN2	MAMP2[3:0]				WAVE2[1:0]		TSEL2[2:0]			TEN2	Res.	EN2
	rw	rw	rw	rw	rw	rw	rw	rw	rw	rw	rw	rw	rw		rw
15	14	13	12	11	10	9	8	7	6	5	4	3	2	1	0
Res.	CEN1	DMAUDRIE1	DMAEN1	MAMP1[3:0]				WAVE1[1:0]		TSEL1[2:0]			TEN1	Res.	EN1
	rw	rw	rw	rw	rw	rw	rw	rw	rw	rw	rw	rw	rw		rw

Bit 31 Reserved, must be kept at reset value

Bit 30 **CEN2**: DAC Channel 2 calibration enable

This bit is set and cleared by software to enable/disable DAC channel 2 calibration, it can be written only if bit EN2=0 into DAC_CR (the calibration mode can be entered/exit only when the DAC channel is disabled) Otherwise, the write operation is ignored.

0: DAC channel 2 in normal operating mode

1: DAC channel 2 in calibration mode

Bit 29 **DMAUDRIE2**: DAC channel2 DMA underrun interrupt enable

This bit is set and cleared by software.

0: DAC channel2 DMA underrun interrupt disabled

1: DAC channel2 DMA underrun interrupt enabled

Bit 28 **DMAEN2**: DAC channel2 DMA enable

This bit is set and cleared by software.

0: DAC channel2 DMA mode disabled

1: DAC channel2 DMA mode enabled

Bits 27:24 **MAMP2[3:0]**: DAC channel2 mask/amplitude selector

These bits are written by software to select mask in wave generation mode or amplitude in triangle generation mode.

0000: Unmask bit0 of LFSR/ triangle amplitude equal to 1

0001: Unmask bits[1:0] of LFSR/ triangle amplitude equal to 3

0010: Unmask bits[2:0] of LFSR/ triangle amplitude equal to 7

0011: Unmask bits[3:0] of LFSR/ triangle amplitude equal to 15

0100: Unmask bits[4:0] of LFSR/ triangle amplitude equal to 31

0101: Unmask bits[5:0] of LFSR/ triangle amplitude equal to 63

0110: Unmask bits[6:0] of LFSR/ triangle amplitude equal to 127

0111: Unmask bits[7:0] of LFSR/ triangle amplitude equal to 255

1000: Unmask bits[8:0] of LFSR/ triangle amplitude equal to 511

1001: Unmask bits[9:0] of LFSR/ triangle amplitude equal to 1023

1010: Unmask bits[10:0] of LFSR/ triangle amplitude equal to 2047

≥ 1011: Unmask bits[11:0] of LFSR/ triangle amplitude equal to 4095

Bits 23:22 **WAVE2[1:0]**: DAC channel2 noise/triangle wave generation enable

These bits are set/reset by software.
00: wave generation disabled
01: Noise wave generation enabled
1x: Triangle wave generation enabled

Note: Only used if bit TEN2 = 1 (DAC channel2 trigger enabled)

Bits 21:19 **TSEL2[2:0]**: DAC channel2 trigger selection

These bits select the external event used to trigger DAC channel2
000: Timer 6 TRGO event
001: Reserved
010: Timer 7 TRGO event
011: Reserved
100: Timer 2 TRGO event
101: Reserved
110: External line9
111: Software trigger

Note: Only used if bit TEN2 = 1 (DAC channel2 trigger enabled).

Bit 18 **TEN2**: DAC channel2 trigger enable

This bit is set and cleared by software to enable/disable DAC channel2 trigger
0: DAC channel2 trigger disabled and data written into the DAC_DHRx register are transferred one APB1 clock cycle later to the DAC_DOR2 register
1: DAC channel2 trigger enabled and data from the DAC_DHRx register are transferred three APB1 clock cycles later to the DAC_DOR2 register

Note: When software trigger is selected, the transfer from the DAC_DHRx reg*ister to the DAC_DOR2 register takes only one APB1 clock cycle.*

Bit 17 Reserved, must be kept at reset value.

Bit 16 **EN2**: DAC channel2 enable

This bit is set and cleared by software to enable/disable DAC channel2.
0: DAC channel2 disabled
1: DAC channel2 enabled

Bit 15 Reserved, must be kept at reset value.

Bit 14 **CEN1**: DAC Channel 1 calibration enable

This bit is set and cleared by software to enable/disable DAC channel 1 calibration, it can be written only if bit EN1=0 into DAC_CR (the calibration mode can be entered/exit only when the DAC channel is disabled) Otherwise, the write operation is ignored.
0: DAC channel 1 in normal operating mode
1: DAC channel 1 in calibration mode

Bit 13 **DMAUDRIE1**: DAC channel1 DMA Underrun Interrupt enable

This bit is set and cleared by software.
0: DAC channel1 DMA Underrun Interrupt disabled
1: DAC channel1 DMA Underrun Interrupt enabled

Bit 12 **DMAEN1**: DAC channel1 DMA enable

This bit is set and cleared by software.
0: DAC channel1 DMA mode disabled
1: DAC channel1 DMA mode enabled

Bits 11:8 **MAMP1[3:0]**: DAC channel1 mask/amplitude selector

These bits are written by software to select mask in wave generation mode or amplitude in triangle generation mode.

0000: Unmask bit0 of LFSR/ triangle amplitude equal to 1
0001: Unmask bits[1:0] of LFSR/ triangle amplitude equal to 3
0010: Unmask bits[2:0] of LFSR/ triangle amplitude equal to 7
0011: Unmask bits[3:0] of LFSR/ triangle amplitude equal to 15
0100: Unmask bits[4:0] of LFSR/ triangle amplitude equal to 31
0101: Unmask bits[5:0] of LFSR/ triangle amplitude equal to 63
0110: Unmask bits[6:0] of LFSR/ triangle amplitude equal to 127
0111: Unmask bits[7:0] of LFSR/ triangle amplitude equal to 255
1000: Unmask bits[8:0] of LFSR/ triangle amplitude equal to 511
1001: Unmask bits[9:0] of LFSR/ triangle amplitude equal to 1023
1010: Unmask bits[10:0] of LFSR/ triangle amplitude equal to 2047
≥ 1011: Unmask bits[11:0] of LFSR/ triangle amplitude equal to 4095

Bits 7:6 **WAVE1[1:0]**: DAC channel1 noise/triangle wave generation enable

These bits are set and cleared by software.

00: wave generation disabled
01: Noise wave generation enabled
1x: Triangle wave generation enabled

Note: Only used if bit TEN1 = 1 (DAC channel1 trigger enabled).

Bits 5:3 **TSEL1[2:0]**: DAC channel1 trigger selection

These bits select the external event used to trigger DAC channel1.

000: Timer 6 TRGO event
001: Reserved
010: Timer 7 TRGO event
011: Reserved
100: Timer 2 TRGO event
101: Reserved
110: External line9
111: Software trigger

Note: Only used if bit TEN1 = 1 (DAC channel1 trigger enabled).

Bit 2 **TEN1**: DAC channel1 trigger enable

This bit is set and cleared by software to enable/disable DAC channel1 trigger.

0: DAC channel1 trigger disabled and data written into the DAC_DHRx register are transferred one APB1 clock cycle later to the DAC_DOR1 register

1: DAC channel1 trigger enabled and data from the DAC_DHRx register are transferred three APB1 clock cycles later to the DAC_DOR1 register

Note: When software trigger is selected, the transfer from the DAC_DHRx register to the DAC_DOR1 register takes only one APB1 clock cycle.

Bit 1 Reserved, must be kept at reset value.

Bit 0 **EN1**: DAC channel1 enable

This bit is set and cleared by software to enable/disable DAC channel1.

0: DAC channel1 disabled
1: DAC channel1 enabled

17.5.2 DAC software trigger register (DAC_SWTRGR)

Address offset: 0x04
Reset value: 0x0000 0000

31	30	29	28	27	26	25	24	23	22	21	20	19	18	17	16
Res.	Res.	Res.	Res.	Res.	Res.	Res.	Res.	Res.	Res.	Res.	Res.	Res.	Res.	Res.	Res.

15	14	13	12	11	10	9	8	7	6	5	4	3	2	1	0
Res.	Res.	Res.	Res.	Res.	Res.	Res.	Res.	Res.	Res.	Res.	Res.	Res.	Res.	SWTRIG2	SWTRIG1
														w	w

Bits 31:2 Reserved, must be kept at reset value.

Bit 1 **SWTRIG2**: DAC channel2 software trigger

This bit is set by software to trigger the DAC in software trigger mode.
0: No trigger
1: Trigger

Note: This bit is cleared by hardware (one APB1 clock cycle later) once the DAC_DHR2 register value has been loaded into the DAC_DOR2 register.

Bit 0 **SWTRIG1**: DAC channel1 software trigger

This bit is set by software to trigger the DAC in software trigger mode.
0: No trigger
1: Trigger

Note: This bit is cleared by hardware (one APB1 clock cycle later) once the DAC_DHR1 register value has been loaded into the DAC_DOR1 register.

17.5.3 DAC channel1 12-bit right-aligned data holding register (DAC_DHR12R1)

Address offset: 0x08
Reset value: 0x0000 0000

31	30	29	28	27	26	25	24	23	22	21	20	19	18	17	16
Res.	Res.	Res.	Res.	Res.	Res.	Res.	Res.	Res.	Res.	Res.	Res.	Res.	Res.	Res.	Res.

15	14	13	12	11	10	9	8	7	6	5	4	3	2	1	0
Res.	Res.	Res.	Res.	DACC1DHR[11:0]											
				rw	rw	rw	rw	rw	rw	rw	rw	rw	rw	rw	rw

Bits 31:12 Reserved, must be kept at reset value.

Bits 11:0 **DACC1DHR[11:0]**: DAC channel1 12-bit right-aligned data

These bits are written by software which specifies 12-bit data for DAC channel1.

17.5.4 DAC channel1 12-bit left aligned data holding register (DAC_DHR12L1)

Address offset: 0x0C

Reset value: 0x0000 0000

31	30	29	28	27	26	25	24	23	22	21	20	19	18	17	16
Res.	Res.	Res.	Res.	Res.	Res.	Res.	Res.	Res.	Res.	Res.	Res.	Res.	Res.	Res.	Res.

15	14	13	12	11	10	9	8	7	6	5	4	3	2	1	0
DACC1DHR[11:0]												Res.	Res.	Res.	Res.
rw	rw	rw	rw	rw	rw	rw	rw	rw	rw	rw	rw				

Bits 31:16 Reserved, must be kept at reset value.

Bits 15:4 **DACC1DHR[11:0]**: DAC channel1 12-bit left-aligned data
These bits are written by software which specifies 12-bit data for DAC channel1.

Bits 3:0 Reserved, must be kept at reset value.

17.5.5 DAC channel1 8-bit right aligned data holding register (DAC_DHR8R1)

Address offset: 0x10

Reset value: 0x0000 0000

31	30	29	28	27	26	25	24	23	22	21	20	19	18	17	16
Res.	Res.	Res.	Res.	Res.	Res.	Res.	Res.	Res.	Res.	Res.	Res.	Res.	Res.	Res.	Res.

15	14	13	12	11	10	9	8	7	6	5	4	3	2	1	0
Res.	Res.	Res.	Res.	Res.	Res.	Res.	Res.	DACC1DHR[7:0]							
								rw	rw	rw	rw	rw	rw	rw	rw

Bits 31:8 Reserved, must be kept at reset value.

Bits 7:0 **DACC1DHR[7:0]**: DAC channel1 8-bit right-aligned data
These bits are written by software which specifies 8-bit data for DAC channel1.

17.5.6 DAC channel2 12-bit right aligned data holding register (DAC_DHR12R2)

Address offset: 0x14

Reset value: 0x0000 0000

31	30	29	28	27	26	25	24	23	22	21	20	19	18	17	16
Res.	Res.	Res.	Res.	Res.	Res.	Res.	Res.	Res.	Res.	Res.	Res.	Res.	Res.	Res.	Res.

15	14	13	12	11	10	9	8	7	6	5	4	3	2	1	0
Res.	Res.	Res.	Res.	DACC2DHR[11:0]											
				rw	rw	rw	rw	rw	rw	rw	rw	rw	rw	rw	rw

Bits 31:12 Reserved, must be kept at reset value.

Bits 11:0 **DACC2DHR[11:0]**: DAC channel2 12-bit right-aligned data
These bits are written by software which specifies 12-bit data for DAC channel2.

17.5.7 DAC channel2 12-bit left aligned data holding register (DAC_DHR12L2)

Address offset: 0x18

Reset value: 0x0000 0000

31	30	29	28	27	26	25	24	23	22	21	20	19	18	17	16
Res.	Res.	Res.	Res.	Res.	Res.	Res.	Res.	Res.	Res.	Res.	Res.	Res.	Res.	Res.	Res.

15	14	13	12	11	10	9	8	7	6	5	4	3	2	1	0
DACC2DHR[11:0]												Res.	Res.	Res.	Res.
rw	rw	rw	rw	rw	rw	rw	rw	rw	rw	rw	rw				

Bits 31:16 Reserved, must be kept at reset value.

Bits 15:4 **DACC2DHR[11:0]**: DAC channel2 12-bit left-aligned data
These bits are written by software which specify 12-bit data for DAC channel2.

Bits 3:0 Reserved, must be kept at reset value.

17.5.8 DAC channel2 8-bit right-aligned data holding register (DAC_DHR8R2)

Address offset: 0x1C

Reset value: 0x0000 0000

31	30	29	28	27	26	25	24	23	22	21	20	19	18	17	16
Res.	Res.	Res.	Res.	Res.	Res.	Res.	Res.	Res.	Res.	Res.	Res.	Res.	Res.	Res.	Res.

15	14	13	12	11	10	9	8	7	6	5	4	3	2	1	0
Res.	Res.	Res.	Res.	Res.	Res.	Res.	Res.	DACC2DHR[7:0]							
								rw	rw	rw	rw	rw	rw	rw	rw

Bits 31:8 Reserved, must be kept at reset value.

Bits 7:0 **DACC2DHR[7:0]**: DAC channel2 8-bit right-aligned data
These bits are written by software which specifies 8-bit data for DAC channel2.

17.5.9 Dual DAC 12-bit right-aligned data holding register (DAC_DHR12RD)

Address offset: 0x20

Reset value: 0x0000 0000

31	30	29	28	27	26	25	24	23	22	21	20	19	18	17	16
Res.	Res.	Res.	Res.	DACC2DHR[11:0]											
				rw	rw	rw	rw	rw	rw	rw	rw	rw	rw	rw	rw

15	14	13	12	11	10	9	8	7	6	5	4	3	2	1	0
Res.	Res.	Res.	Res.	DACC1DHR[11:0]											
				rw	rw	rw	rw	rw	rw	rw	rw	rw	rw	rw	rw

Bits 31:28 Reserved, must be kept at reset value.

Bits 27:16 **DACC2DHR[11:0]**: DAC channel2 12-bit right-aligned data
These bits are written by software which specifies 12-bit data for DAC channel2.

Bits 15:12 Reserved, must be kept at reset value.

Bits 11:0 **DACC1DHR[11:0]**: DAC channel1 12-bit right-aligned data
These bits are written by software which specifies 12-bit data for DAC channel1.

17.5.10 DUAL DAC 12-bit left aligned data holding register (DAC_DHR12LD)

Address offset: 0x24

Reset value: 0x0000 0000

31	30	29	28	27	26	25	24	23	22	21	20	19	18	17	16
DACC2DHR[11:0]												Res.	Res.	Res.	Res.
rw	rw	rw	rw	rw	rw	rw	rw	rw	rw	rw	rw				

15	14	13	12	11	10	9	8	7	6	5	4	3	2	1	0
DACC1DHR[11:0]												Res.	Res.	Res.	Res.
rw	rw	rw	rw	rw	rw	rw	rw	rw	rw	rw	rw				

Bits 31:20 **DACC2DHR[11:0]**: DAC channel2 12-bit left-aligned data
These bits are written by software which specifies 12-bit data for DAC channel2.

Bits 19:16 Reserved, must be kept at reset value.

Bits 15:4 **DACC1DHR[11:0]**: DAC channel1 12-bit left-aligned data
These bits are written by software which specifies 12-bit data for DAC channel1.

Bits 3:0 Reserved, must be kept at reset value.

17.5.11 DUAL DAC 8-bit right aligned data holding register (DAC_DHR8RD)

Address offset: 0x28

Reset value: 0x0000 0000

31	30	29	28	27	26	25	24	23	22	21	20	19	18	17	16
Res.	Res.	Res.	Res.	Res.	Res.	Res.	Res.	Res.	Res.	Res.	Res.	Res.	Res.	Res.	Res.

15	14	13	12	11	10	9	8	7	6	5	4	3	2	1	0
DACC2DHR[7:0]								DACC1DHR[7:0]							
rw	rw	rw	rw	rw	rw	rw	rw	rw	rw	rw	rw	rw	rw	rw	rw

Bits 31:16 Reserved, must be kept at reset value.

Bits 15:8 **DACC2DHR[7:0]**: DAC channel2 8-bit right-aligned data
These bits are written by software which specifies 8-bit data for DAC channel2.

Bits 7:0 **DACC1DHR[7:0]**: DAC channel1 8-bit right-aligned data
These bits are written by software which specifies 8-bit data for DAC channel1.

17.5.12 DAC channel1 data output register (DAC_DOR1)

Address offset: 0x2C

Reset value: 0x0000 0000

31	30	29	28	27	26	25	24	23	22	21	20	19	18	17	16
Res.	Res.	Res.	Res.	Res.	Res.	Res.	Res.	Res.	Res.	Res.	Res.	Res.	Res.	Res.	Res.

15	14	13	12	11	10	9	8	7	6	5	4	3	2	1	0
Res.	Res.	Res.	Res.	DACC1DOR[11:0]											
				r	r	r	r	r	r	r	r	r	r	r	r

Bits 31:12 Reserved, must be kept at reset value.

Bits 11:0 **DACC1DOR[11:0]**: DAC channel1 data output
These bits are read-only, they contain data output for DAC channel1.

17.5.13 DAC channel2 data output register (DAC_DOR2)

Address offset: 0x30
Reset value: 0x0000 0000

31	30	29	28	27	26	25	24	23	22	21	20	19	18	17	16
Res.	Res.	Res.	Res.	Res.	Res.	Res.	Res.	Res.	Res.	Res.	Res.	Res.	Res.	Res.	Res.

15	14	13	12	11	10	9	8	7	6	5	4	3	2	1	0
Res.	Res.	Res.	Res.	DACC2DOR[11:0]											
				r	r	r	r	r	r	r	r	r	r	r	r

Bits 31:12 Reserved, must be kept at reset value.

Bits 11:0 **DACC2DOR[11:0]**: DAC channel2 data output
These bits are read-only, they contain data output for DAC channel2.

17.5.14 DAC status register (DAC_SR)

Address offset: 0x34

Reset value: 0x0000 0000

31	30	29	28	27	26	25	24	23	22	21	20	19	18	17	16
BWST2	CAL_ FLAG2	DMAU DR2	Res.	Res.	Res.	Res.	Res.	Res.	Res.	Res.	Res.	Res.	Res.	Res.	Res.
r	r	rc_w1													

15	14	13	12	11	10	9	8	7	6	5	4	3	2	1	0
BWST1	CAL_ FLAG1	DMAU DR1	Res.	Res.	Res.	Res.	Res.	Res.	Res.	Res.	Res.	Res.	Res.	Res.	Res.
r	r	rc_w1													

Bit 31 **BWST2**: DAC Channel 2 busy writing sample time flag

This bit is systematically set just after Sample & Hold mode enable and is set each time the software writes the register DAC_SHSR2, It is cleared by hardware when the write operation of DAC_SHSR2 is complete. (It takes about 3 LSI periods of synchronization).

0:There is no write operation of DAC_SHSR2 ongoing: DAC_SHSR2 can be written

1:There is a write operation of DAC_SHSR2 ongoing: DAC_SHSR2 cannot be written

Bit 30 **CAL_FLAG2**: DAC Channel 2 calibration offset status

This bit is set and cleared by hardware

0: calibration trimming value is lower than the offset correction value

1: calibration trimming value is equal or greater than the offset correction value

Bit 29 **DMAUDR2**: DAC channel2 DMA underrun flag

This bit is set by hardware and cleared by software (by writing it to 1).

0: No DMA underrun error condition occurred for DAC channel2

1: DMA underrun error condition occurred for DAC channel2 (the currently selected trigger is driving DAC channel2 conversion at a frequency higher than the DMA service capability rate)

Bits 28:16 Reserved, must be kept at reset value.

Bit 15 **BWST1**: DAC Channel 1 busy writing sample time flag

This bit is systematically set just after Sample & Hold mode enable and is set each time the software writes the register DAC_SHSR1, It is cleared by hardware when the write operation of DAC_SHSR1 is complete. (It takes about 3LSI periods of synchronization).

0:There is no write operation of DAC_SHSR1 ongoing: DAC_SHSR1 can be written

1:There is a write operation of DAC_SHSR1 ongoing: DAC_SHSR1 cannot be written

Bit 14 **CAL_FLAG1**: DAC Channel 1 calibration offset status

This bit is set and cleared by hardware

0: calibration trimming value is lower than the offset correction value

1: calibration trimming value is equal or greater than the offset correction value

Bit 13 **DMAUDR1**: DAC channel1 DMA underrun flag

This bit is set by hardware and cleared by software (by writing it to 1).

0: No DMA underrun error condition occurred for DAC channel1

1: DMA underrun error condition occurred for DAC channel1 (the currently selected trigger is driving DAC channel1 conversion at a frequency higher than the DMA service capability rate)

Bits 12:0 Reserved, must be kept at reset value.

17.5.15 DAC calibration control register (DAC_CCR)

Address offset: 0x38

Reset value: 0x00XX 00XX

31	30	29	28	27	26	25	24	23	22	21	20	19	18	17	16
Res.	Res.	Res.	Res.	Res.	Res.	Res.	Res.	Res.	Res.	Res.	OTRIM2[4:0]				
											rw				

15	14	13	12	11	10	9	8	7	6	5	4	3	2	1	0
Res.	Res.	Res.	Res.	Res.	Res.	Res.	Res.	Res.	Res.	Res.	OTRIM1[4:0]				
											rw				

Bits 31:21 Reserved, must be kept at reset value.

Bits 20:16 OTRIM2[4:0]: DAC Channel 2 offset trimming value

Bits 15:5 Reserved, must be kept at reset value.

Bits 4:0 OTRIM1[4:0]: DAC Channel 1 offset trimming value

17.5.16 DAC mode control register (DAC_MCR)

Address offset: 0x3C

Reset value: 0x0000 0000

31	30	29	28	27	26	25	24	23	22	21	20	19	18	17	16
Res.	Res.	Res.	Res.	Res.	Res.	Res.	Res.	Res.	Res.	Res.	Res.	Res.	MODE2[2:0]		
													rw		

15	14	13	12	11	10	9	8	7	6	5	4	3	2	1	0
Res.	Res.	Res.	Res.	Res.	Res.	Res.	Res.	Res.	Res.	Res.	Res.	Res.	MODE1[2:0]		
													rw		

Bits 31:19 Reserved, must be kept at reset value.

Bits 18:16 **MODE2[2:0]:** DAC Channel 2 mode

These bits can be written only when the DAC is disabled and not in the calibration mode (when bit EN2=0 and bit CEN2 =0 in the DAC_CR register). If EN2=1 or CEN2 =1 the write operation is ignored.

They can be set and cleared by software to select the DAC Channel 2 mode:

– DAC Channel 2 in normal Mode

000: DAC Channel 2 is connected to external pin with Buffer enabled

001: DAC Channel 2 is connected to external pin and to on chip peripherals with buffer enabled

010: DAC Channel 2 is connected to external pin with buffer disabled

011: DAC Channel 2 is connected to on chip peripherals with Buffer disabled

– DAC Channel 2 in sample & hold mode

100: DAC Channel 2 is connected to external pin with Buffer enabled

101: DAC Channel 2 is connected to external pin and to on chip peripherals with Buffer enabled

110: DAC Channel 2 is connected to external pin and to on chip peripherals with Buffer disabled

111: DAC Channel 2 is connected to on chip peripherals with Buffer disabled

Bits 15:3 Reserved, must be kept at reset value.

Bits 0:2 **MODE1[2:0]:** DAC Channel 1 mode

These bits can be written only when the DAC is disabled and not in the calibration mode (when bit EN1=0 and bit CEN1 =0 in the DAC_CR register). If EN1=1 or CEN1 =1 the write operation is ignored.

They can be set and cleared by software to select the DAC Channel 1 mode:

– DAC Channel 1 in normal Mode

000: DAC Channel 1 is connected to external pin with Buffer enabled

001: DAC Channel 1 is connected to external pin and to on chip peripherals with Buffer enabled

010: DAC Channel 1 is connected to external pin with Buffer disabled

011: DAC Channel 1 is connected to on chip peripherals with Buffer disabled

– DAC Channel 1 in sample & hold mode

100: DAC Channel 1 is connected to external pin with Buffer enabled

101: DAC Channel 1 is connected to external pin and to on chip peripherals with Buffer enabled

110: DAC Channel 1 is connected to external pin and to on chip peripherals with Buffer disabled

111: DAC Channel 1 is connected to on chip peripherals with Buffer disabled

17.5.17 DAC Sample and Hold sample time register 1 (DAC_SHSR1)

Address offset: 0x40

Reset value: 0x0000 0000

31	30	29	28	27	26	25	24	23	22	21	20	19	18	17	16
Res.	Res.	Res.	Res.	Res.	Res.	Res.	Res.	Res.	Res.	Res.	Res.	Res.	Res.	Res.	Res.

15	14	13	12	11	10	9	8	7	6	5	4	3	2	1	0
Res.	Res.	Res.	Res.	Res.	Res.	TSAMPLE1[9:0]									
						rw	rw	rw	rw	rw	rw	rw	rw	rw	rw

Bits 31:10 Reserved, must be kept at reset value.

Bits 9:0 **TSAMPLE1[9:0]:** DAC Channel 1 sample Time (only valid in sample & hold mode)

These bits can be written when the DAC channel1 is disabled or also during normal operation. in the latter case, the write can be done only when BWSTx of DAC_SR register is low, If BWSTx=1, the write operation is ignored.

*Note: It represents the number of low-speed (LSI) clocks to perform a sample phase. Sampling time = (*TSAMPLE1[9:0] + 1) x T LSI.

17.5.18 DAC Sample and Hold sample time register 2 (DAC_SHSR2)

Address offset: 0x44

Reset value: 0x0000 0000

31	30	29	28	27	26	25	24	23	22	21	20	19	18	17	16
Res.	Res.	Res.	Res.	Res.	Res.	Res.	Res.	Res.	Res.	Res.	Res.	Res.	Res.	Res.	Res.

15	14	13	12	11	10	9	8	7	6	5	4	3	2	1	0
Res.	Res.	Res.	Res.	Res.	Res.	TSAMPLE2[9:0]									
						rw	rw	rw	rw	rw	rw	rw	rw	rw	rw

Bits 31:10 Reserved, must be kept at reset value.

Bits 9:0 **TSAMPLE2[9:0]:** DAC Channel 2 sample Time (only valid in sample & hold mode)

These bits can be written when the DAC channel2 is disabled or also during normal operation. in the latter case, the write can be done only when BWSTx of DAC_SR register is low, if BWSTx=1, the write operation is ignored.

*Note: It represents the number of low-speed (LSI) clocks to perform a sample phase. Sampling time = (*TSAMPLE1[9:0] + 1) x T LSI.

17.5.19 DAC Sample and Hold hold time register (DAC_SHHR)

Address offset: 0x48

Reset value: 0x0001 0001

31	30	29	28	27	26	25	24	23	22	21	20	19	18	17	16
Res.	Res.	Res.	Res.	Res.	Res.	THOLD2[9:0]									
						rw									

15	14	13	12	11	10	9	8	7	6	5	4	3	2	1	0
Res.	Res.	Res.	Res.	Res.	Res.	THOLD1[9:0]									
						rw									

Bits 31:26 Reserved, must be kept at reset value.

Bits 25:16 **THOLD2[9:0]:** DAC Channel 2 hold time (only valid in sample & hold mode).

Hold time= (THOLD[9:0]) x T LSI

Bits 15:10 Reserved, must be kept at reset value.

Bits 9:0 **THOLD1[9:0]:** DAC Channel 1 hold Time (only valid in sample & hold mode)

Hold time= (THOLD[9:0]) x T LSI

Note: These bits can be written only when the DAC channel is disabled and in normal operating mode(when bit ENx=0 and bit CEN2x=0 in the DAC_CR register). If ENx=1 or CENx=1 the write operation is ignored.

17.5.20 DAC Sample and Hold refresh time register (DAC_SHRR)

Address offset: 0x4C

Reset value: 0x0001 0001

31	30	29	28	27	26	25	24	23	22	21	20	19	18	17	16
Res.	Res.	Res.	Res.	Res.	Res.	Res.	Res.	TREFRESH2[7:0]							
								rw							
15	14	13	12	11	10	9	8	7	6	5	4	3	2	1	0
Res.	Res.	Res.	Res.	Res.	Res.	Res.	Res.	TREFRESH1[7:0]							
								rw							

Bits 31:24 Reserved, must be kept at reset value.

Bits 23:16 **TREFRESH2[7:0]:** DAC Channel 2 refresh Time (only valid in sample & hold mode)

Refresh time= (TREFRESH[7:0]) x T LSI

Bits 15:8 Reserved, must be kept at reset value.

Bits 7:0 **TREFRESH1[7:0]:** DAC Channel 1 refresh Time (only valid in sample & hold mode)

Refresh time= (TREFRESH[7:0]) x T LSI

Note: These bits can be written only when the DAC channel is disabled and in normal operating mode (when bit ENx=0 and bit CEN2x=0 in the DAC_CR register). If ENx=1 or CENx=1 the write operation is ignored.

17.5.21 DAC register map

Table 77 summarizes the DAC registers.

Table 77. DAC register map

Offset	Register	31	30	29	28	27	26	25	24	23	22	21	20	19	18	17	16	15	14	13	12	11	10	9	8	7	6	5	4	3	2	1	0
0x00	DAC_CR	Res.	CEN2	DMAUDRIE2	DMAEN2	MAMP2[3:0]				WAVE2[2:0]		TSEL2 [2:0]			TEN2	Res.	EN2	Res.	CEN1	DMAUDRIE1	DMAEN1	MAMP1[3:0]				WAVE1[2:0]		TSEL1 [2:0]			TEN1	Res.	EN1
	Reset value		0	0	0	0	0	0	0	0	0	0	0	0	0		0		0	0	0	0	0	0	0	0	0	0	0	0	0		0
0x04	DAC_ SWTRGR	Res.	Res.	Res.	Res.	Res.	Res.	Res.	Res.	Res.	Res.	Res.	Res.	Res.	Res.	Res.	Res.	Res.	Res.	Res.	Res.	Res.	Res.	Res.	Res.	Res.	Res.	Res.	Res.	Res.	Res.	SWTRIG2	SWTRIG1
	Reset value																															0	0
0x08	DAC_ DHR12R1	Res.	Res.	Res.	Res.	Res.	Res.	Res.	Res.	Res.	Res.	Res.	Res.	Res.	Res.	Res.	Res.	Res.	Res.	Res.	Res.	DACC1DHR[11:0]											
	Reset value																					0	0	0	0	0	0	0	0	0	0	0	0
0x0C	DAC_ DHR12L1	Res.	Res.	Res.	Res.	Res.	Res.	Res.	Res.	Res.	Res.	Res.	Res.	Res.	Res.	Res.	Res.	DACC1DHR[11:0]												Res.	Res.	Res.	Res.
	Reset value																	0	0	0	0	0	0	0	0	0	0	0	0				
0x10	DAC_ DHR8R1	Res.	Res.	Res.	Res.	Res.	Res.	Res.	Res.	Res.	Res.	Res.	Res.	Res.	Res.	Res.	Res.	Res.	Res.	Res.	Res.	Res.	Res.	Res.	Res.	DACC1DHR[7:0]							
	Reset value																									0	0	0	0	0	0	0	0
0x14	DAC_ DHR12R2	Res.	Res.	Res.	Res.	Res.	Res.	Res.	Res.	Res.	Res.	Res.	Res.	Res.	Res.	Res.	Res.	Res.	Res.	Res.	Res.	DACC2DHR[11:0]											
	Reset value																					0	0	0	0	0	0	0	0	0	0	0	0
0x18	DAC_ DHR12L2	Res.	Res.	Res.	Res.	Res.	Res.	Res.	Res.	Res.	Res.	Res.	Res.	Res.	Res.	Res.	Res.	DACC2DHR[11:0]												Res.	Res.	Res.	Res.
	Reset value																	0	0	0	0	0	0	0	0	0	0	0	0				
0x1C	DAC_ DHR8R2	Res.	Res.	Res.	Res.	Res.	Res.	Res.	Res.	Res.	Res.	Res.	Res.	Res.	Res.	Res.	Res.	Res.	Res.	Res.	Res.	Res.	Res.	Res.	Res.	DACC2DHR[7:0]							
	Reset value																									0	0	0	0	0	0	0	0
0x20	DAC_ DHR12RD	Res.	Res.	Res.	Res.	DACC2DHR[11:0]												Res.	Res.	Res.	Res.	DACC1DHR[11:0]											
	Reset value					0	0	0	0	0	0	0	0	0	0	0	0					0	0	0	0	0	0	0	0	0	0	0	0
0x24	DAC_ DHR12LD	DACC2DHR[11:0]												Res.	Res.	Res.	Res.	DACC1DHR[11:0]												Res.	Res.	Res.	Res.
	Reset value	0	0	0	0	0	0	0	0	0	0	0	0					0	0	0	0	0	0	0	0	0	0	0	0				
0x28	DAC_ DHR8RD	Res.	Res.	Res.	Res.	Res.	Res.	Res.	Res.	Res.	Res.	Res.	Res.	Res.	Res.	Res.	Res.	DACC2DHR[7:0]								DACC1DHR[7:0]							
	Reset value																	0	0	0	0	0	0	0	0	0	0	0	0	0	0	0	0
0x2C	DAC_DOR1	Res.	Res.	Res.	Res.	Res.	Res.	Res.	Res.	Res.	Res.	Res.	Res.	Res.	Res.	Res.	Res.	Res.	Res.	Res.	Res.	DACC1DOR[11:0]											
	Reset value																					0	0	0	0	0	0	0	0	0	0	0	0
0x30	DAC_DOR2	Res.	Res.	Res.	Res.	Res.	Res.	Res.	Res.	Res.	Res.	Res.	Res.	Res.	Res.	Res.	Res.	Res.	Res.	Res.	Res.	DACC2DOR[11:0]											
	Reset value																					0	0	0	0	0	0	0	0	0	0	0	0
0x34	DAC_SR	BWST2	CAL_FLAG2	DMAUDR2	Res.	Res.	Res.	Res.	Res.	Res.	Res.	Res.	Res.	Res.	Res.	Res.	Res.	BWST1	CAL_FLAG1	DMAUDR1	Res.	Res.	Res.	Res.	Res.	Res.	Res.	Res.	Res.	Res.	Res.	Res.	Res.
	Reset value	0	0	0														0	0	0													

Table 77. DAC register map

Offset	Register	31	30	29	28	27	26	25	24	23	22	21	20	19	18	17	16	15	14	13	12	11	10	9	8	7	6	5	4	3	2	1	0
0x38	**DAC_CCR**	Res.	Res.	Res.	Res.	Res.	Res.	Res.	Res.	Res.	Res.	Res.	OTRIM2[4:0]					Res.	Res.	Res.	Res.	Res.	Res.	Res.	Res.	Res.	Res.	Res.	OTRIM1[4:0]				
	Reset value												X	X	X	X	X												X	X	X	X	X
0x3C	**DAC_MCR**	Res.	Res.	Res.	Res.	Res.	Res.	Res.	Res.	Res.	Res.	Res.	Res.	Res.	MODE2 [2:0]			Res.	Res.	Res.	Res.	Res.	Res.	Res.	Res.	Res.	Res.	Res.	Res.	Res.	MODE1 [2:0]		
	Reset value														0	0	0														0	0	0
0x40	**DAC_SHSR 1**	Res.	Res.	Res.	Res.	Res.	Res.	Res.	Res.	Res.	Res.	Res.	Res.	Res.	Res.	Res.	Res.	Res.	Res.	Res.	Res.	Res.	Res.	TSAMPLE1[9:0]									
	Reset value																							0	0	0	0	0	0	0	0	0	0
0x44	**DAC_SHSR 2**	Res.	Res.	Res.	Res.	Res.	Res.	Res.	Res.	Res.	Res.	Res.	Res.	Res.	Res.	Res.	Res.	Res.	Res.	Res.	Res.	Res.	Res.	TSAMPLE2[9:0]									
	Reset value																							0	0	0	0	0	0	0	0	0	0
0x48	**DAC_SHHR**	Res.	Res.	Res.	Res.	Res.	Res.	THOLD2[9:0]										Res.	Res.	Res.	Res.	Res.	Res.	THOLD1[9:0]									
	Reset value							0	0	0	0	0	0	0	0	0	1							0	0	0	0	0	0	0	0	0	1
0x4C	**DAC_SHRR**	Res.	Res.	Res.	Res.	Res.	Res.	Res.	Res.	TREFRESH2[7:0]								Res.	Res.	Res.	Res.	Res.	Res.	Res.	Res.	TREFRESH1[7:0]							
	Reset value									0	0	0	0	0	0	0	1									0	0	0	0	0	0	0	1

Refer to *Section 2.2.2: Memory map and register boundary addresses* for the register boundary addresses.

18 Voltage reference buffer (VREFBUF)

18.1 Introduction

The STM32L431/433/443 devices embed a voltage reference buffer which can be used as voltage reference for ADCs, DACs and also as voltage reference for external components through the VREF+ pin. When the VREF+ is double-bonded with VDDA in a package, the voltage reference buffer is not available and must be kept disable (refer to datasheet for packages pinout description).

18.2 VREFBUF functional description

The internal voltage reference buffer supports two voltages, which are configured with VRS bit in the VREFBUF_CSR register:

- V_{REF_OUT1} around 2.048 V. This requires V_{DDA} equal to or higher than 2.4 V.
- V_{REF_OUT2} around 2.5 V. This requires V_{DDA} equal to or higher than 2.8 V.

The internal voltage reference can be configured in four different modes depending on ENVR and HIZ bits configuration. These modes are provided in the table below:

Table 78. VREFBUF buffer modes

ENVR	HIZ	VREFBUF buffer configuration
0	0	VREFBUF buffer OFF: – V_{REF+} pin pulled-down to V_{SSA}.
0	1	External voltage reference mode (default value): – VREFBUF buffer OFF – V_{REF+} pin floating.
1	0	Internal voltage reference mode: – VREFBUF buffer ON – V_{REF+} pin connected to VREFBUF buffer output.
1	1	Hold mode: – VREFBUF buffer OFF – V_{REF+} pin floating. The voltage is held with the external capacitor – V_{RR} detection disabled and VRR bit keeps last state.

After enabling the VREFBUF buffer by setting ENVR bit and clearing HIZ bit in the VREFBUF_CSR register, the user must wait until VRR bit is set, meaning that the voltage reference output has reached its expected value.

18.3 VREFBUF registers

18.3.1 VREFBUF control and status register (VREFBUF_CSR)

Address offset: 0x00

Reset value: 0x0000 0002

31	30	29	28	27	26	25	24	23	22	21	20	19	18	17	16
Res	Res	Res	Res	Res	Res	Res	Res	Res	Res	Res	Res	Res	Res	Res	Res
15	14	13	12	11	10	9	8	7	6	5	4	3	2	1	0
Res	Res	Res	Res	Res	Res	Res	Res	Res	Res	Res	Res	VRR	VRS	HIZ	ENVR
												r	rw	rw	rw

Bits 31:4 Reserved, must be kept at reset value.

Bit 3 **VRR:** Voltage reference buffer ready

0: the voltage reference buffer output is not ready.

1: the voltage reference buffer output reached the requested level.

Bit 2 **VRS**: Voltage reference scale

This bit selects the value generated by the voltage reference buffer.

0: Voltage reference set to V_{REF_OUT1} (around 2.048 V).

1: Voltage reference set to V_{REF_OUT2} (around 2.5 V).

Bit 1 **HIZ:** High impedance mode

This bit controls the analog switch to connect or not the V_{REF+} pin.

0: V_{REF+} pin is internally connected to the voltage reference buffer output.

1: V_{REF+} pin is high impedance.

Refer to *Table 78: VREFBUF buffer modes* for modes descriptions depending on ENVR bit configuration.

Bit 0 **ENVR:** Voltage reference buffer enable

This bit is used to enable the voltage reference buffer.

0: Internal voltage reference disable.

1: Internal voltage reference enable.

18.3.2 VREFBUF calibration control register (VREFBUF_CCR)

Address offset: 0x04

Reset value: 0x0000 00XX

31	30	29	28	27	26	25	24	23	22	21	20	19	18	17	16
Res	Res	Res	Res	Res	Res	Res	Res	Res	Res	Res	Res	Res	Res	Res	Res
15	14	13	12	11	10	9	8	7	6	5	4	3	2	1	0
Res	Res	Res	Res	Res	Res	Res	Res	Res	Res	TRIM[5:0]					
										rw	rw	rw	rw	rw	rw

Bits 31:6 Reserved, must be kept at reset value.

Bits 5:0 **TRIM[5:0]**: Trimming code

These bits are automatically initialized after reset with the trimming value stored in the Flash during production test. Writing into these bits allows to tune the internal reference buffer voltage.

18.3.3 VREFBUF register map

The following table gives the VREFBUF register map and the reset values.

Table 79. VREFBUF register map and reset values

Offset	Register	31	30	29	28	27	26	25	24	23	22	21	20	19	18	17	16	15	14	13	12	11	10	9	8	7	6	5	4	3	2	1	0
0x00	**VREFBUF_CSR**	Res.	Res.	Res.	Res.	Res.	Res.	Res.	Res.	Res.	Res.	Res.	Res.	Res.	Res.	Res.	Res.	Res.	Res.	Res.	Res.	Res.	Res.	Res.	Res.	Res.	Res.	Res.	Res.	VRR	VRS	HIZ	ENVR
	Reset value																													0	0	1	0
0x04	**VREFBUF_CCR**	Res.	Res.	Res.	Res.	Res.	Res.	Res.	Res.	Res.	Res.	Res.	Res.	Res.	Res.	Res.	Res.	Res.	Res.	Res.	Res.	Res.	Res.	Res.	Res.	Res.	Res.	TRIM[5:0]					
	Reset value																											x	x	x	x	x	x

Refer to *Section 2.2.2 on page 62* for the register boundary addresses.

19 Comparator (COMP)

19.1 Introduction

The device embeds two ultra-low power comparators COMP1, and COMP2

The comparators can be used for a variety of functions including:

- Wake-up from low-power mode triggered by an analog signal,
- Analog signal conditioning,
- Cycle-by-cycle current control loop when combined with a PWM output from a timer.

19.2 COMP main features

- Each comparator has configurable plus and minus inputs used for flexible voltage selection:
  - Multiplexed I/O pins
  - DAC Channel1 and Channel2
  - Internal reference voltage and three submultiple values (1/4, 1/2, 3/4) provided by scaler (buffered voltage divider)
- Programmable hysteresis
- Programmable speed / consumption
- The outputs can be redirected to an I/O or to timer inputs for triggering:
  - Break events for fast PWM shutdowns
- Comparator outputs with blanking source
- The two comparators can be combined in a window comparator
- Each comparator has interrupt generation capability with wake-up from Sleep and Stop modes (through the EXTI controller)

19.3 COMP functional description

19.3.1 COMP block diagram

The block diagram of the comparators is shown in *Figure 120: Comparators block diagram*.

Figure 120. Comparators block diagram

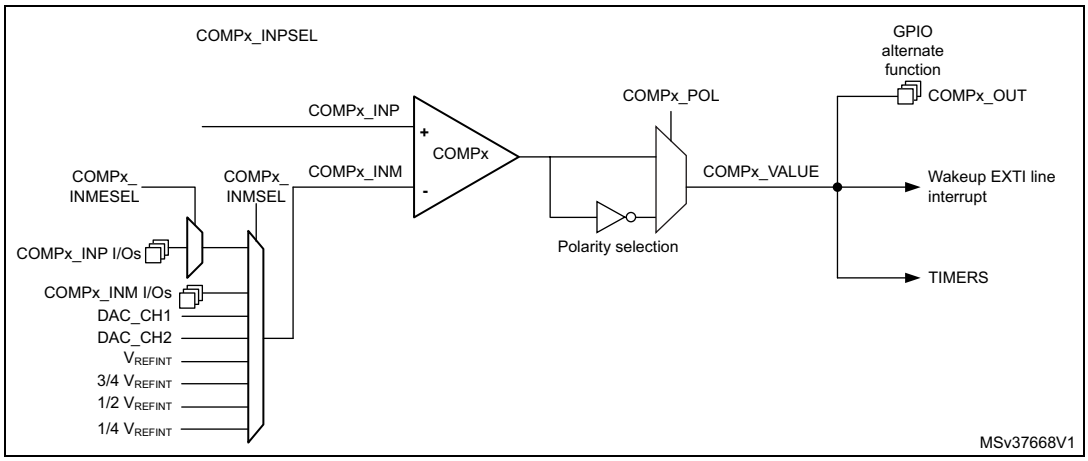

19.3.2 COMP pins and internal signals

The I/Os used as comparators inputs must be configured in analog mode in the GPIOs registers.

The comparator output can be connected to the I/Os using the alternate function channel given in “Alternate function mapping” table in the datasheet.

The output can also be internally redirected to a variety of timer input for the following purposes:

- Emergency shut-down of PWM signals, using BKIN and BKIN2 inputs
- Cycle-by-cycle current control, using OCREF_CLR inputs
- Input capture for timing measures

It is possible to have the comparator output simultaneously redirected internally and externally.

Table 80. COMP1 input plus assignment

COMP1_INP	COMP1_INPSEL
PC5	00
PB2	01
PA1	10

Table 81. COMP1 input minus assignment

COMP1_INM	COMP1_INMSEL[2:0]	COMP1_INMESEL[1:0]
¼ V_{REFINT}	000	N. A.(1)
½ V_{REFINT}	001	N. A.(1)
¾ V_{REFINT}	010	N. A.(1)
V_{REFINT}	011	N. A.(1)
DAC Channel1	100	N. A.(1)
DAC Channel2	101	N. A.(1)
PB1	110	N. A.(1)
PC4	111	00
PA0	111	01
PA4	111	10
PA5	111	11

1. N.A : not affected.

Table 82. COMP2 input plus assignment

COMP2_INP	COMP2_INPSEL
PB4	00
PB6	01
PA3	10

Table 83. COMP2 input minus assignment

COMP2_INM	COMP2_INMSEL[2:0]	COMP2_INMESEL[1:0]
¼ V_{REFINT}	000	N.A.(1)
½ V_{REFINT}	001	N.A.(1)
¾ V_{REFINT}	010	N.A.(1)
V_{REFINT}	011	N.A.(1)
DAC Channel1	100	N.A.(1)
DAC Channel2	101	N.A.(1)
PB3	110	N.A.(1)
PB7	111	00
PA2	111	01
PA4	111	10
PA5	111	11

1. N.A: not affected.

19.3.3 COMP reset and clocks

The COMP clock provided by the clock controller is synchronous with the APB2 clock.

There is no clock enable control bit provided in the RCC controller. Reset and clock enable bits are common for COMP and SYSCFG.

Note: ***Important:*** *The polarity selection logic and the output redirection to the port works independently from the APB2 clock. This allows the comparator to work even in Stop mode.*

19.3.4 Comparator LOCK mechanism

The comparators can be used for safety purposes, such as over-current or thermal protection. For applications having specific functional safety requirements, it is necessary to insure that the comparator programming cannot be altered in case of spurious register access or program counter corruption.

For this purpose, the comparator control and status registers can be write-protected (read-only).

Once the programming is completed, the COMPxLOCK bit can be set to 1. This causes the whole register to become read-only, including the COMPxLOCK bit.

The write protection can only be reset by a MCU reset.

19.3.5 Window comparator

The purpose of window comparator is to monitor the analog voltage if it is within specified voltage range defined by lower and upper threshold.

Two embedded comparators can be utilized to create window comparator. The monitored analog voltage is connected to the non-inverting (plus) inputs of comparators connected together and the upper and lower threshold voltages are connected to the inverting (minus) inputs of the comparators. Two non-inverting inputs can be connected internally together by enabling WINMODE bit to save one IO for other purpose.

Figure 121. Window mode

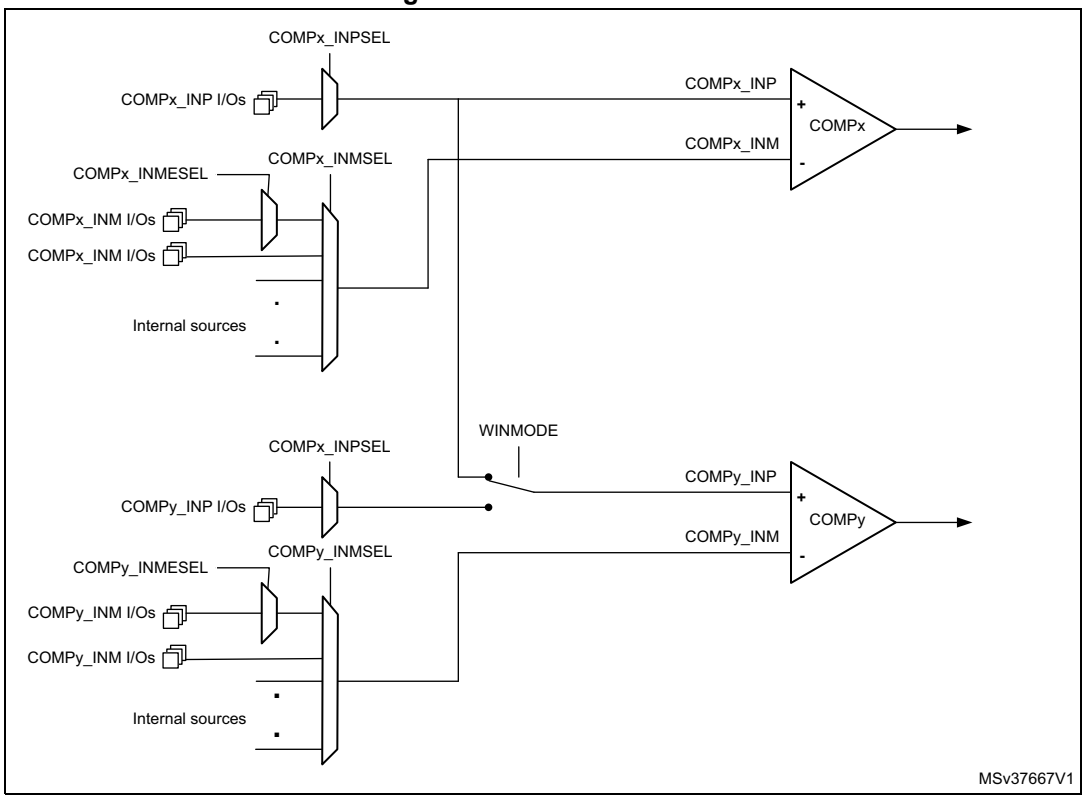

19.3.6 Hysteresis

The comparator includes a programmable hysteresis to avoid spurious output transitions in case of noisy signals. The hysteresis can be disabled if it is not needed (for instance when exiting from low-power mode) to be able to force the hysteresis value using external components.

Figure 122. Comparator hysteresis

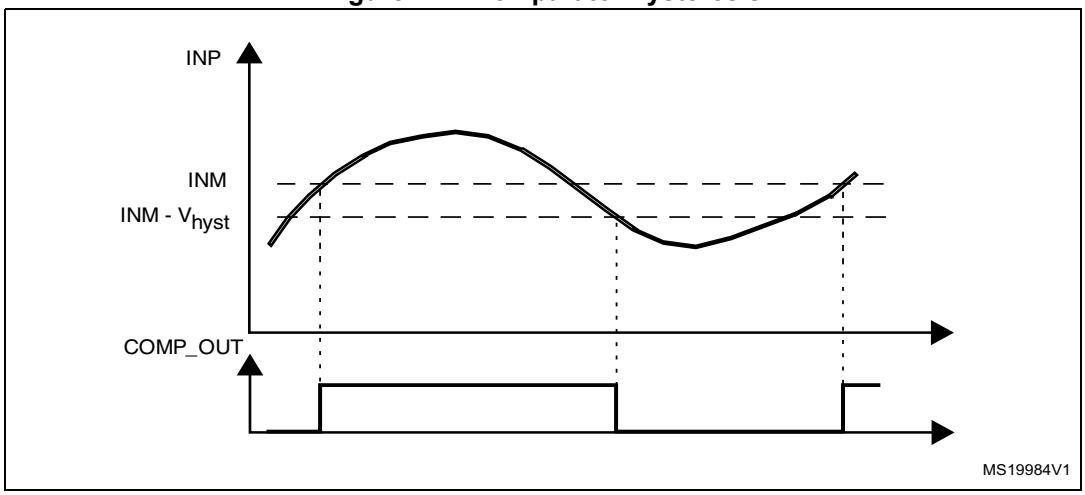

19.3.7 Comparator output blanking function

The purpose of the blanking function is to prevent the current regulation to trip upon short current spikes at the beginning of the PWM period (typically the recovery current in power switches anti parallel diodes).It consists of a selection of a blanking window which is a timer output compare signal. The selection is done by software (refer to the comparator register description for possible blanking signals). Then, the complementary of the blanking signal is ANDed with the comparator output to provide the wanted comparator output. See the example provided in the figure below.

Figure 123. Comparator output blanking

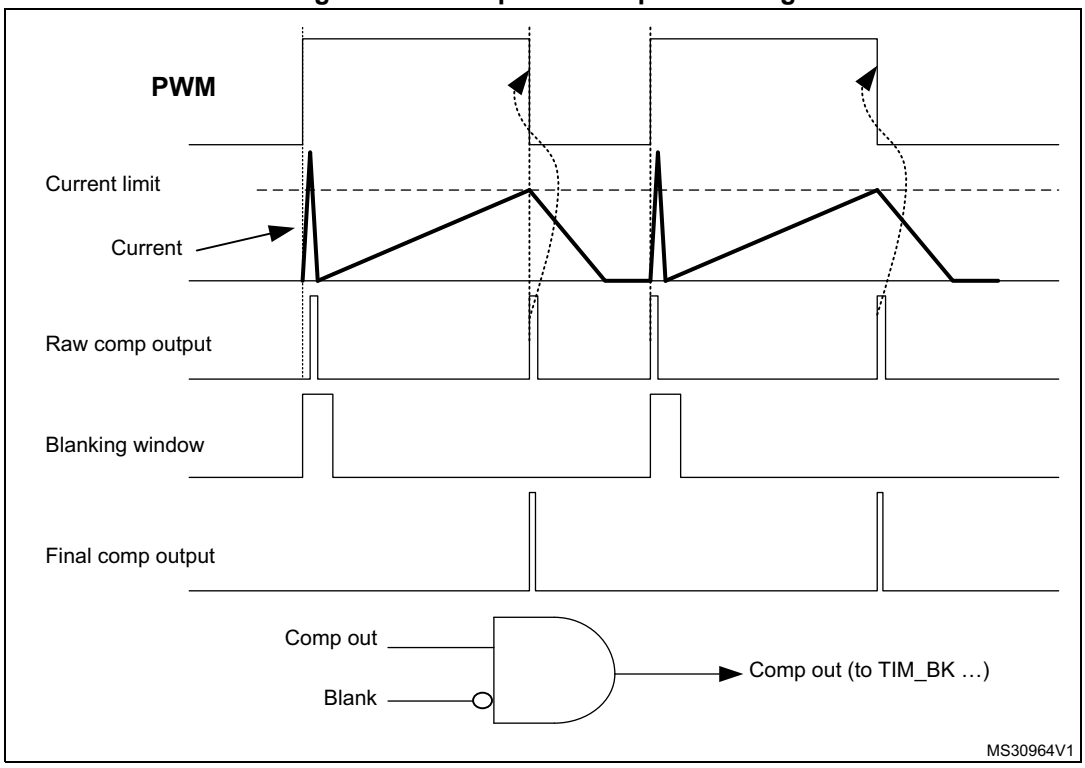

19.3.8 COMP power and speed modes

COMP1 and COMP2 power consumption versus propagation delay can be adjusted to have the optimum trade-off for a given application.

The bits COMPx_PWR_MODE[1:0] in COMPx_CSR registers can be programmed as follows:

00: High speed / full power

01 or 10: Medium speed / medium power

11: Low speed / ultra-low-power

19.4 COMP low-power modes

Table 84. Comparator behavior in the low power modes

Mode	Description
Sleep	No effect on the comparators. Comparator interrupts cause the device to exit the Sleep mode.
Low-power run	No effect.
Low-power sleep	No effect. COMP interrupts cause the device to exit the Low-power sleep mode.
Stop 0	No effect on the comparators. Comparator interrupts cause the device to exit the Stop mode.
Stop 1	
Stop 2	
Standby	The COMP registers are powered down and must be reinitialized after exiting Standby or Shutdown mode.
Shutdown	

19.5 COMP interrupts

The comparator outputs are internally connected to the Extended interrupts and events controller. Each comparator has its own EXTI line and can generate either interrupts or events. The same mechanism is used to exit from low-power modes.

Refer to Interrupt and events section for more details.

To enable the COMPx interrupt, it is required to follow this sequence:

1. Configure and enable the EXTI line corresponding to the COMPx output event in interrupt mode and select the rising, falling or both edges sensitivity
2. Configure and enable the NVIC IRQ channel mapped to the corresponding EXTI lines
3. Enable the COMPx

Table 85. Interrupt control bits

Interrupt event	Event flag	Enable control bit	Exit from Sleep mode	Exit from Stop modes	Exit from Standby mode
COMP1 output	VALUE in COMP1_CSR	through EXTI	yes	yes	N/A
COMP2 output	VALUE in COMP2_CSR	through EXTI	yes	yes	N/A

19.6 COMP registers

19.6.1 Comparator 1 control and status register (COMP1_CSR)

The COMP1_CSR is the Comparator 1 control/status register. It contains all the bits /flags related to comparator1.

Address offset: 0x00

System reset value: 0x0000 0000

31	30	29	28	27	26	25	24	23	22	21	20	19	18	17	16
LOCK	VALUE	Res.	Res.	Res.	INMESEL		Res.	SCAL EN	BRG EN	Res.	BLANKING			HYST	
rs	r				rw			rw	rw		rw			rw	

15	14	13	12	11	10	9	8	7	6	5	4	3	2	1	0
POLA RITY	Res.	Res.	Res.	Res.	Res.	Res.	INP SEL.		INMSEL			PWRMODE		Res.	EN
rw							rw		rw			rw			rw

Bit 31 **LOCK:** COMP1_CSR register lock bit

This bit is set by software and cleared by a hardware system reset. It locks the whole content of the comparator 1 control register, COMP1_CSR[31:0].

0: COMP1_CSR[31:0] for comparator 1 are read/write

1: COMP1_CSR[31:0] for comparator 1 are read-only

Bit 30 **VALUE:** Comparator 1 output status bit

This bit is read-only. It reflects the current comparator 1 output taking into account POLARITY bit effect.

Bits 29:27 Reserved, must be kept at reset value.

Bits 26:25 **INMESEL:** comparator 1 input minus extended selection bits.

These bits are set and cleared by software (only if LOCK is not set). They select which extended GPIO input is connected to the input minus of comparator if INMSEL = 111.

00: PC4

01: PA0

10: PA4

11: PA5

Bit 24 Reserved, must be kept at reset value.

Bit 23 **SCALEN**: Voltage scaler enable bit

This bit is set and cleared by software. This bit enable the outputs of the V_{REFINT} divider available on the minus input of the Comparator 1.

0: Bandgap scaler disable (if SCALEN bit of COMP2_CSR register is also reset)

1: Bandgap scaler enable

Bit 22 **BRGEN:** Scaler bridge enable

This bit is set and cleared by software (only if LOCK not set). This bit enable the bridge of the scaler.

0: Scaler resistor bridge disable (if BRGEN bit of COMP2_CSR register is also reset)

1: Scaler resistor bridge enable

If SCALEN is set and BRGEN is reset, BG voltage reference is available but not 1/4BGAP, 1/2BGAP, 3/4 BGAP. BGAP value is sent instead of 1/4BGAP, 1/2BGAP, 3/4 BGAP.

If SCALEN and BRGEN are set, 1/4 BGAP 1/2BGAP 3/4BGAP and BGAP voltage references are available.

Bit 21 Reserved, must be kept at reset value

Bits 20:18 **BLANKING[2:0]:** Comparator 1 blanking source selection bits

These bits select which timer output controls the comparator 1 output blanking.

000: No blanking

001: TIM1 OC5 selected as blanking source

010: TIM2 OC3 selected as blanking source

All other values: reserved

Bits 17:16 **HYST[1:0]:** Comparator 1 hysteresis selection bits

These bits are set and cleared by software (only if LOCK not set). They select the Hysteresis voltage of the comparator 1.

00: No hysteresis

01: Low hysteresis

10: Medium hysteresis

11: High hysteresis

Bit 15 **POLARITY:** Comparator 1 polarity selection bit

This bit is set and cleared by software (only if LOCK not set). It inverts Comparator 1 polarity.

0: Comparator 1 output value not inverted

1: Comparator 1output value inverted

Bits 14:9 Reserved, must be kept at reset value.

Bits 8:7 **INPSEL**: Comparator1 input plus selection bit

This bit is set and cleared by software (only if LOCK not set).

00: External I/O - PC5

01: PB2

10: PA1

11: Reserved, the bit must be kept at the reset value

Bits 6:4 **INMSEL**: Comparator 1 input minus selection bits

These bits are set and cleared by software (only if LOCK not set). They select which input is connected to the input minus of comparator 1.

000 = 1/4 V_{REFINT}

001 = 1/2 V_{REFINT}

010 = 3/4 V_{REFINT}

011 = V_{REFINT}

100 = DAC Channel1

101 = DAC Channel2

110 = PB1

111 : GPIOx selected by INMESEL bits

Bits 3:2 **PWRMODE[1:0]:** Power Mode of the comparator 1

These bits are set and cleared by software (only if LOCK not set). They control the power/speed of the Comparator 1.

00: High speed
01 or 10: Medium speed
11: Ultra low power

Bit 1 Reserved, must be kept cleared.

Bit 0 **EN:** Comparator 1 enable bit

This bit is set and cleared by software (only if LOCK not set). It switches on Comparator1.

0: Comparator 1 switched OFF
1: Comparator 1 switched ON

19.6.2 Comparator 2 control and status register (COMP2_CSR)

The COMP2_CSR is the Comparator 2 control/status register. It contains all the bits /flags related to comparator2.

Address offset: 0x04

System reset value: 0x0000 0000

31	30	29	28	27	26	25	24	23	22	21	20	19	18	17	16
LOCK	VALUE	Res.	Res.	Res.	INMESEL		Res.	SCAL EN	BRG EN	Res.	BLANKING			HYST	
rs	r				rw			rw	rw		rw			rw	

15	14	13	12	11	10	9	8	7	6	5	4	3	2	1	0
POLA RITY	Res.	Res.	Res.	Res.	Res.	WIN MODE	INPSEL.		INMSEL			PWRMODE		Res.	EN
rw						rw	rw		rw			rw			rw

Bit 31 **LOCK:** CSR register lock bit

This bit is set by software and cleared by a hardware system reset. It locks the whole content of the comparator 2 control register, COMP2_CSR[31:0].

0: COMP2_CSR[31:0] for comparator 2 are read/write
1: COMP2_CSR[31:0] for comparator 2 are read-only

Bit 30 **VALUE:** Comparator 2 output status bit

This bit is read-only. It reflects the current comparator 2 output taking into account POLARITY bit effect.

Bits 29:27 Reserved, must be kept at reset value

Bits 26:25 **INMESEL:** comparator 2 input minus extended selection bits.

These bits are set and cleared by software (only if LOCK is not set). They select which extended GPIO input is connected to the input minus of comparator if INMSEL = 111.

00: PB7
01: PA2
10: PA4
11: PA5

Bit 24 Reserved, must be kept at reset value

Bit 23 **SCALEN**: Voltage scaler enable bit

This bit is set and cleared by software. This bit enable the outputs of the V_{REFINT} divider available on the minus input of the Comparator 2.

0: Bandgap scaler disable (if SCALEN bit of COMP1_CSR register is also reset)

1: Bandgap scaler enable

Bit 22 **BRGEN:** Scaler bridge enable

This bit is set and cleared by software (only if LOCK not set). This bit enable the bridge of the scaler.

0: Scaler resistor bridge disable (if BRGEN bit of COMP1_CSR register is also reset)

1: Scaler resistor bridge enable

If SCALEN is set and BRGEN is reset, BG voltage reference is available but not 1/4BGAP, 1/2BGAP, 3/4 BGAP. BGAP value is sent instead of 1/4BGAP, 1/2BGAP, 3/4 BGAP.

If SCALEN and BRGEN are set, 1/4 BGAP 1/2BGAP 3/4BGAP and BGAP voltage references are available.

Bit 21 Reserved, must be kept at reset value

Bits 20:18 **BLANKING[2:0]:** Comparator 2 blanking source selection bits

These bits select which timer output controls the comparator 2 output blanking.

000: No blanking

001: Reserved

010: Reserved

100: TIM15 OC1 selected as blanking source

All other values: reserved

Bits 17:16 **HYST[1:0]:** Comparator 2 hysteresis selection bits

These bits are set and cleared by software (only if LOCK not set). Select the Hysteresis voltage of the comparator 2.

00: No hysteresis

01: Low hysteresis

10: Medium hysteresis

11: High hysteresis

Bit 15 **POLARITY:** Comparator 2 polarity selection bit

This bit is set and cleared by software (only if LOCK not set). It inverts Comparator 2 polarity.

0: Comparator 2 output value not inverted

1: Comparator 2output value inverted

Bits 14:10 Reserved, must be kept at reset value.

Bit 9 **WINMODE**: Windows mode selection bit

This bit is set and cleared by software (only if LOCK not set). This bit selects the window mode of the comparators. If set, both positive inputs of comparators will be connected together.

0: Input plus of Comparator 2 is not connected to Comparator 1

1: Input plus of Comparator 2 is connected with input plus of Comparator 1

Bits 8:7 **INPSEL**: Comparator 1 input plus selection bit

This bit is set and cleared by software (only if LOCK not set).

00: PB4

01: PB6

10: PA3

11: Reserved, the bit must be kept at the reset value

Bits 6:4 **INMSEL**: Comparator 2 input minus selection bits

These bits are set and cleared by software (only if LOCK not set). They select which input is connected to the input minus of comparator 2.

000 = 1/4 V_{REFINT}
001 = 1/2 V_{REFINT}
010 = 3/4 V_{REFINT}
011 = V_{REFINT}
100 = DAC Channel1
101 = DAC Channel2
110 = PB3
111: GPIOx selected by INMESEL bits

Bits 3:2 **PWRMODE[1:0]:** Power Mode of the comparator 2

These bits are set and cleared by software (only if LOCK not set). They control the power/speed of the Comparator 2.

00: High speed
01 or 10: Medium speed
11: Ultra low power

Bit 1 Reserved, must be kept cleared.

Bit 0 **EN:** Comparator 2 enable bit

This bit is set and cleared by software (only if LOCK not set). It switches oncomparator2.

0: Comparator 2 switched OFF
1: Comparator 2 switched ON

19.6.3 COMP register map

The following table summarizes the comparator registers.

Table 86. COMP register map and reset values

Offset	Register	31	30	29	28	27	26	25	24	23	22	21	20	19	18	17	16	15	14	13	12	11	10	9	8	7	6	5	4	3	2	1	0
0x00	COMP1_CSR	LOCK	VALUE	Res.	Res.	Res.	INMESEL		Res.	SCALEN	BRGEN.	Res.	BLANKING			HYST		POLARITY.	Res.	Res.	Res.	Res.	Res.	Res.	INPSEL		INMSEL			PWRMODE		Res.	EN
	Reset value	0	0				0	0		0	0		0	0	0	0	0	0							0	0	0	0	0	0	0		0
0x04	COMP2_CSR	LOCK	VALUE	Res.	Res.	Res.	INMESEL		Res.	SCALEN	BRGEN	Res.	BLANKING			HYST		POLARITY.	Res.	Res.	Res.	Res.	Res.	WINMODE	INPSEL		INMSEL			PWRMODE		Res.	EN
	Reset value	0	0				0	0		0	0		0	0	0	0	0	0						0	0	0	0	0	0	0	0		0

Refer to *Section 2.2.2 on page 62* for the register boundary addresses.

20 Operational amplifiers (OPAMP)

20.1 Introduction

The device embeds an operational amplifier with two inputs and one output. The three I/Os can be connected to the external pins, this enables any type of external interconnections. The operational amplifier can be configured internally as a follower or as an amplifier with a non-inverting gain ranging from 2 to 16.

The positive input can be connected to the internal DAC.

The output can be connected to the internal ADC.

20.2 OPAMP main features

- Rail-to-rail input and output voltage range
- Low input bias current (down to 1 nA)
- Low input offset voltage (1.5 mV after calibration, 3 mV with factory calibration)
- Low-power mode (current consumption reduced to 30 µA instead of 100 µA)
- Fast wakeup time (10 µs in normal mode, 30 µs in low-power mode)
- Gain bandwidth of 1.6 MHz

20.3 OPAMP functional description

The OPAMP has several modes.

When the OPAMP is disabled, the output is high impedance.

When enabled, it can be in calibration mode, all input and output of the OPAMP are then disconnected, or in functional mode.

There are two functional modes, the low-power mode or the normal mode. In functional mode the inputs and output of the OPAMP are connected as described in the *Section 20.3.3: Signal routing*.

20.3.1 OPAMP reset and clocks

The operational amplifier clock is necessary for accessing the registers. When the application does not need to have read or write access to those registers, the clock can be switched off using the peripheral clock enable register (see OPAMPEN bit in *Section 6.4.18: APB1 peripheral clock enable register 1 (RCC_APB1ENR1)*).

The bit OPAEN enables and disables the OPAMP operation. The OPAMP registers configurations should be changed before enabling the OPAEN bit in order to avoid spurious effects on the output.

When the output of the operational amplifier is no more needed the operational amplifier can be disabled to save power. All the configurations previously set (including the calibration) are maintained while OPAMP is disabled.

20.3.2 Initial configuration

The default configuration of the operational amplifier is a functional mode where the three IOs are connected to external pins. In the default mode the operational amplifier uses the factory trimming values. See electrical characteristics section of the datasheet for factory trimming conditions, usually the temperature is 30 °C and the voltage is 3 V. The trimming values can be adjusted, see *Section 20.3.5: Calibration* for changing the trimming values. The default configuration uses the normal mode, which provides the highest performance. Bit OPALPM can be set in order to switch the operational amplifier to low-power mode and reduced performance. Both normal and low-power mode characteristics are defined in the section “electrical characteristics” of the datasheet. Before utilization, the bit OPA_RANGE of OPAMP_CSR must be set to 1 if V_{DDA} is above 2.4V, or kept at 0 otherwise.

As soon as the OPAEN bit in OPAMP_CSR register is set, the operational amplifier is functional. The two input pins and the output pin are connected as defined in *Section 20.3.3: Signal routing* and the default connection settings can be changed.

Note: The inputs and output pins must be configured in analog mode (default state) in the corresponding GPIOx_MODER register.

20.3.3 Signal routing

The routing for the operational amplifier pins is determined by OPAMP_CSR register.

The connections of the operational amplifier OPAMP1 is described in the table below.

Table 87. Operational amplifier possible connections

Signal	Pin	Internal	comment
OPAMP1_VINM	PA1 or dedicated pin	OPAMP1_OUT or PGA	controlled by bits OPAMODE and VM_SEL.
OPAMP1_VINP	PA0	DAC1_OUT1	controlled by bit VP_SEL.
OPAMP1_VOUT	PA3	ADC1_IN8	The pin is connected when the OPAMP is enabled. The ADC input is controlled by ADC.

20.3.4 OPAMP modes

The operational amplifier inputs and outputs are all accessible on terminals. The amplifier can be used in multiple configuration environments:

- Standalone mode (external gain setting mode)
- Follower configuration mode
- PGA modes

Note: The amplifier output pin is directly connected to the output pad to minimize the output impedance. It cannot be used as a general purpose I/O, even if the amplifier is configured as a PGA and only connected to the ADC channel.

Note: The impedance of the signal must be maintained below a level which avoids the input leakage to create significant artifacts (due to a resistive drop in the source). Please refer to the electrical characteristics section in the datasheet for further details.

Standalone mode (external gain setting mode)

The procedure to use the OPAMP in standalone mode is presented hereafter.

Starting from the default value of OPAMP_CSR, and the default state of GPIOx_MODER, configure bit OPA_RANGE according the V_{DDA} voltage. As soon as the OPAEN bit is set, the two input pins and the output pin are connected to the operational amplifier.

This default configuration uses the factory trimming values and operates in normal mode (highest performance). The behavior of the OPAMP can be changed as follows:

- OPALPM can be set to “operational amplifier low-power” mode in order to save power.
- USERTRIM can be set to modify the trimming values for the input offset.

Figure 124. Standalone mode: external gain setting mode

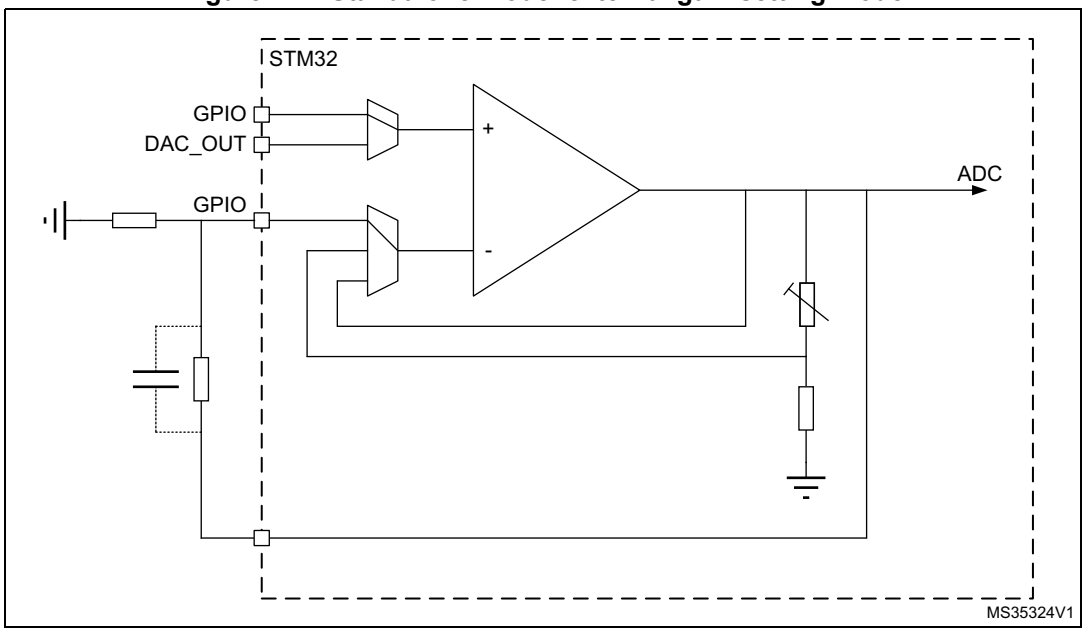

Follower configuration mode

The procedure to use the OPAMP in follower mode is presented hereafter.

- configure OPAMODE bits as “internal follower”
- configure VP_SEL bits as “GPIO connected to VINP”.
- As soon as the OPAEN bit is set, the signal on pin OPAMP_VINP is copied to pin OPAMP_VOUT.

Note: The pin corresponding to OPAMP_VINM is free for another usage.

Note: The signal on the operational amplifier output is also seen as an ADC input. As a consequence, the OPAMP configured in follower mode can be used to perform impedance adaptation on input signals before feeding them to the ADC input, assuming the input signal frequency is compatible with the operational amplifier gain bandwidth specification.

Figure 125. Follower configuration

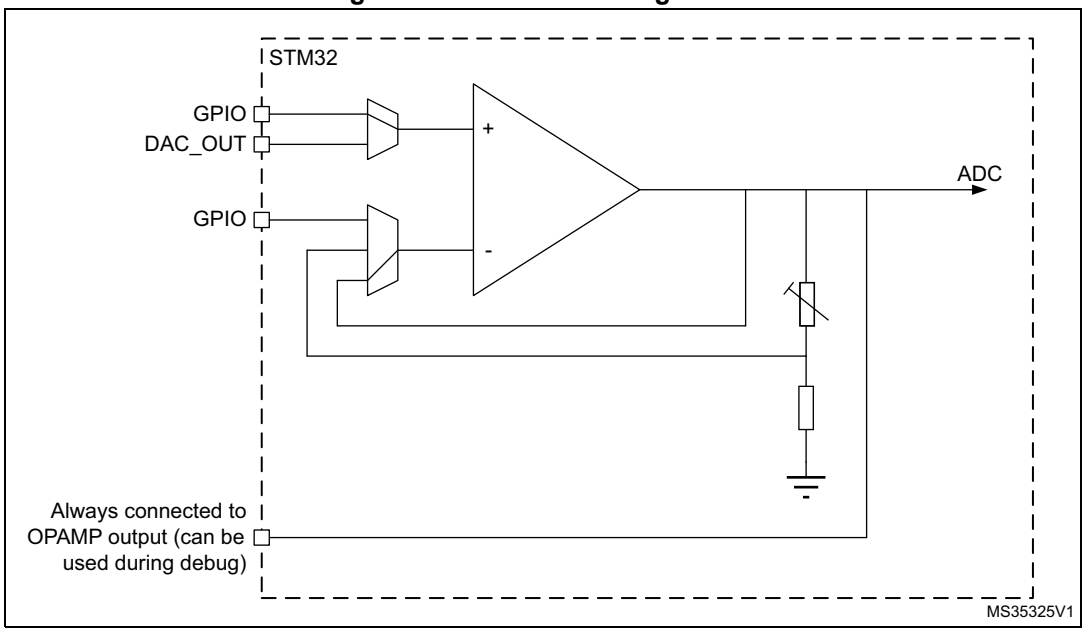

Programmable Gain Amplifier mode

The procedure to use the OPAMP to amplify the amplitude of an input signal is presented hereafter.

- configure OPAMODE bits as “internal PGA enabled”,
- configure PGA_GAIN bits as “internal PGA Gain 2, 4, 8 or 16”,
- configure VM_SEL bits as “inverting not externally connected”,
- configure VP_SEL bits as “GPIO connected to VINP”.

As soon as the OPAEN bit is set, the signal on pin OPAMP_VINP is amplified by the selected gain and visible on pin OPAMP_VOUT.

Note: To avoid saturation, the input voltage should stay below V_{DDA} divided by the selected gain.

Figure 126. PGA mode, internal gain setting (x2/x4/x8/x16), inverting input not used

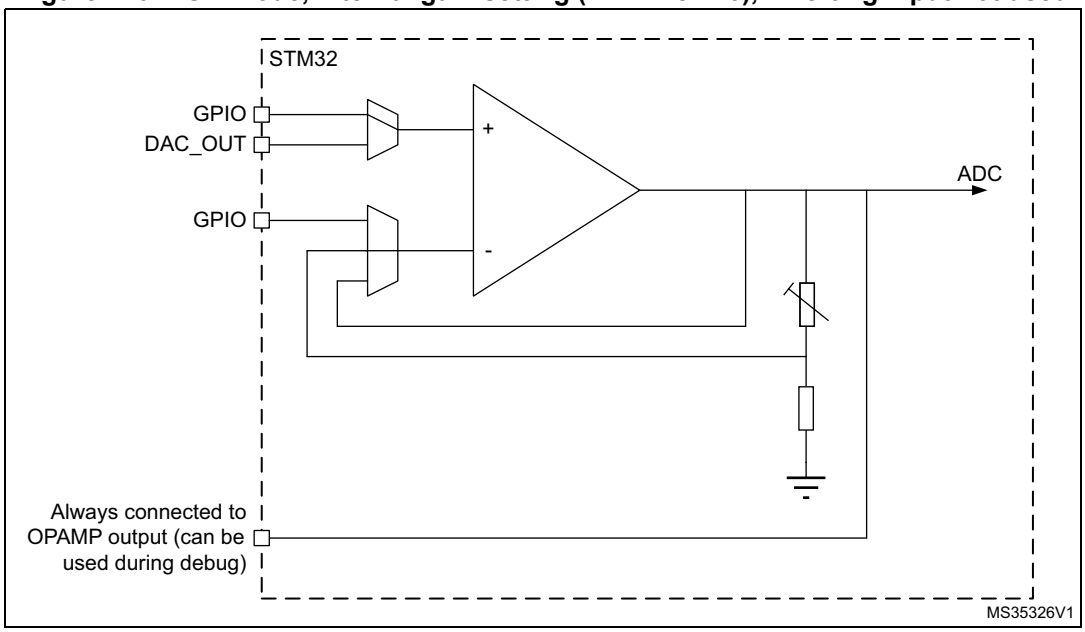

Programmable Gain Amplifier mode with external filtering

The procedure to use the OPAMP to amplify the amplitude of an input signal, with an external filtering, is presented hereafter.

- configure OPAMODE bits as “internal PGA enabled”,
- configure PGA_GAIN bits as “internal PGA Gain 2, 4, 8 or 16”,
- configure VM_SEL bits as “GPIO connected to VINM”,
- configure VP_SEL bits as “GPIO connected to VINP”.

Any external connection on VINP can be used in parallel with the internal PGA, for example a capacitor can be connected between VOUT and VINM for filtering purpose (see datasheet for the value of resistors used in the PGA resistor network).

Figure 127. PGA mode, internal gain setting (x2/x4/x8/x16), inverting input used for filtering

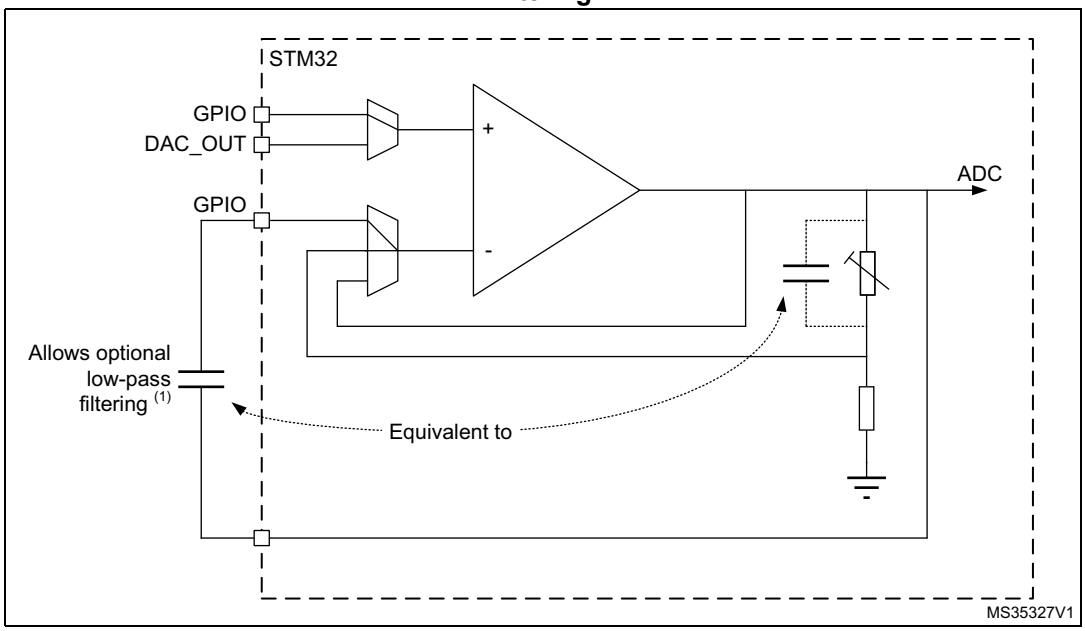

1. The gain depends on the cut-off frequency.

20.3.5 Calibration

At startup, the trimming values are initialized with the preset ‘factory’ trimming value.

The operational amplifier offset can be trimmed by the user. Specific registers allow to have different trimming values for normal mode and for low-power mode.

The aim of the calibration is to cancel as much as possible the OPAMP inputs offset voltage. The calibration circuitry allows to reduce the inputs offset voltage to less than +/-1.5 mV within stable voltage and temperature conditions.

For each mode of the operational amplifier, two trimming values need to be trimmed, one for N differential pair and one for P differential pair.

There are two registers for trimming the operational amplifier offset, one for normal mode (OPAMP_OTR) and one low-power mode (OPAMP_LPOTR). Each register is composed of five bits for P differential pair trimming and five bits for N differential pair trimming. These are the ‘user’ values.

The user is able to switch from ‘factory’ values to ‘user’ trimmed values using the USERTRIM bit in the OPAMP_CSR register. This bit is reset at startup and so the ‘factory’ value are applied by default to the OPAMP trimming registers.

User is liable to change the trimming values in calibration or in functional mode.

The offset trimming registers are typically configured after the calibration operation is initialized by setting bit CALON to 1. When CALON = 1 the inputs of the operational amplifier are disconnected from the functional environment.

- Setting CALSEL to 1 initializes the offset calibration for the P differential pair (low voltage reference used).
- Resetting CALSEL to 0 initializes the offset calibration for the N differential pair (high voltage reference used).

When CALON = 1, the bit CALOUT will reflect the influence of the trimming value selected by CALSEL and OPALPM. When the value of CALOUT switches between two consecutive trimming values, this means that those two values are the best trimming values. The CALOUT flag needs up to 1 ms after the trimming value is changed to become steady (see $t_{OFFTRIM}$max delay specification in the electrical characteristics section of the datasheet).

Note: The closer the trimming value is to the optimum trimming value, the longer it takes to stabilize (with a maximum stabilization time remaining below 1 ms in any case).

Table 88. Operating modes and calibration

Mode	Control bits				Output	
	OPAEN	OPALPM	CALON	CALSEL	V_{OUT}	CALOUT flag
Normal operating mode	1	0	0	X	analog	0
Low-power mode	1	1	0	X	analog	0
Power down	0	X	X	X	Z	0
Offset cal high for normal mode	1	0	1	0	analog	X
Offset cal low for normal mode	1	0	1	1	analog	X
Offset cal high for low-power mode	1	1	1	0	analog	X
Offset cal low for low-power mode	1	1	1	1	analog	X

Calibration procedure

Here are the steps to perform full operational amplifier calibration:

1. Select correct OPA_RANGE in OPAMP_CSR, then set the OPAEN bit in OPAMP_CSR to 1 to enable the operational amplifier.
2. Set the USERTRIM bit in the OPAMP_CSR register to 1.
3. Choose a calibration mode (refer to *Table 88: Operating modes and calibration*). The steps 3 to 4 will have to be repeated 4 times. For the first iteration select
   – Normal mode, offset cal high (N differential pair)

   The above calibration mode correspond to OPALPM=0 and CALSEL=0 in the OPAMP_CSR register.
4. Increment TRIMOFFSETN[4:0] in OPAMP_OTR starting from 00000b until CALOUT changes to 1 in OPAMP_CSR.

Note: CALOUT will switch from 0 to 1 for offset cal high and from 1 to 0 for offset cal low.

Note: Between the write to the OPAMP_OTR register and the read of the CALOUT value, make sure to wait for the $t_{OFFTRIM}$max delay specified in the electrical characteristics section of the datasheet, to get the correct CALOUT value.

The commutation means that the offset is correctly compensated and that the corresponding trim code must be saved in the OPAMP_OTR register.

Repeat steps 3 to 4 for:

– Normal_mode and offset cal low
– Low power mode and offset cal high
– Low power mode and offset cal low

If a mode is not used it is not necessary to perform the corresponding calibration.

Note: During the whole calibration phase the external connection of the operational amplifier output must not pull up or down currents higher than 500 µA.

During the calibration procedure, it is necessary to set up OPAMODE bits as 00 or 01 (PGA disable) or 11 (internal follower).

20.4 OPAMP low-power modes

Table 89. Effect of low-power modes on the OPAMP

Mode	Description
Sleep	No effect.
Low-power run	No effect.
Low-power sleep	No effect.
Stop 0 / Stop 1	No effect, OPAMP registers content is kept.
Stop 2	OPAMP registers content is kept. OPAMP must be disabled before entering Stop 2 mode.
Standby	The OPAMP registers are powered down and must be re-initialized after exiting Standby or Shutdown mode.
Shutdown	

20.5 OPAMP registers

20.5.1 OPAMP1 control/status register (OPAMP1_CSR)

Address offset: 0x00

Reset value: 0x0000 0000

31	30	29	28	27	26	25	24	23	22	21	20	19	18	17	16
OPA_ RANGE	Res.	Res.	Res.	Res.	Res.	Res.	Res.	Res.	Res.	Res.	Res.	Res.	Res.	Res.	Res.
rw															

15	14	13	12	11	10	9	8	7	6	5	4	3	2	1	0
CAL OUT	USER TRIM	CAL SEL	CALON	Res.	VP_ SEL	VM_SEL		Res.	Res.	PGA_GAIN		OPAMODE		OPA LPM	OPAEN
r	rw	rw	rw		rw	rw	rw			rw	rw	rw	w	rw	rw

Bit 31 **OPA_RANGE:** Operational amplifier power supply range for stability

All AOP must be in power down to allow AOP-RANGE bit write. It applies to all AOP embedded in the product.

0: Low range (VDDA < 2.4V)

1: High range (VDDA > 2.4V)

Bits 30:16 Reserved, must be kept at reset value.

Bit 15 **CALOUT:** Operational amplifier calibration output

During calibration mode offset is trimmed when this signal toggle.

Bit 14 **USERTRIM:** allows to switch from ‘factory’ AOP offset trimmed values to AOP offset ‘user’ trimmed values

This bit is active for both mode normal and low-power.

0: ‘factory’ trim code used

1: ‘user’ trim code used

Bit 13 **CALSEL:** Calibration selection

0: NMOS calibration (200mV applied on OPAMP inputs)

1: PMOS calibration (VDDA-200mV applied on OPAMP inputs)

Bit 12 **CALON:** Calibration mode enabled

0: Normal mode

1: Calibration mode (all switches opened by HW)

Bit 11 Reserved, must be kept at reset value.

Bit 10 **VP_SEL:** Non inverted input selection

0: GPIO connected to VINP

1: DAC connected to VINP

Bits 9:8 **VM_SEL:** Inverting input selection

These bits are used only when OPAMODE = 00, 01 or 10.

00: GPIO connected to VINM (valid also in PGA mode for filtering)

01: Reserved

1x: Inverting input not externally connected. These configurations are valid only when OPAMODE = 10 (PGA mode)

Bits 7:6 Reserved, must be kept at reset value.

Bits 5:4 **PGA_GAIN:** Operational amplifier Programmable amplifier gain value
00: internal PGA Gain 2
01: internal PGA Gain 4
10: internal PGA Gain 8
11: internal PGA Gain 16

Bits 3:2 **OPAMODE:** Operational amplifier PGA mode
00: internal PGA disable
01: internal PGA disable
10: internal PGA enable, gain programmed in PGA_GAIN
11: internal follower

Bit 1 **OPALPM:** Operational amplifier Low Power Mode
The operational amplifier must be disable to change this configuration.
0: operational amplifier in normal mode
1: operational amplifier in low-power mode

Bit 0 **OPAEN:** Operational amplifier Enable
0: operational amplifier disabled
1: operational amplifier enabled

20.5.2 OPAMP1 offset trimming register in normal mode (OPAMP1_OTR)

Address offset: 0x04

Reset value: 0x0000 XXXX (factory trimmed values)

31	30	29	28	27	26	25	24	23	22	21	20	19	18	17	16
Res.	Res.	Res.	Res.	Res.	Res.	Res.	Res.	Res.	Res.	Res.	Res.	Res.	Res.	Res.	Res.

15	14	13	12	11	10	9	8	7	6	5	4	3	2	1	0
Res.	Res.	Res.	TRIMOFFSETP					Res.	Res.	Res.	TRIMOFFSETN				
			rw	rw	rw	rw	rw				rw	rw	rw	rw	rw

Bits 31:13 Reserved, must be kept at reset value.

Bits 12:8 **TRIMOFFSETP[4:0]:** Trim for PMOS differential pairs

Bits 7:5 Reserved, must be kept at reset value.

Bits 4:0 **TRIMOFFSETN[4:0]:** Trim for NMOS differential pairs

20.5.3 OPAMP1 offset trimming register in low-power mode (OPAMP1_LPOTR)

Address offset: 0x08

Reset value: 0x0000 XXXX (factory trimmed values)

31	30	29	28	27	26	25	24	23	22	21	20	19	18	17	16
Res.	Res.	Res.	Res.	Res.	Res.	Res.	Res.	Res.	Res.	Res.	Res.	Res.	Res.	Res.	Res.

15	14	13	12	11	10	9	8	7	6	5	4	3	2	1	0
Res.	Res.	Res.	TRIMLPOFFSETP					Res.	Res.	Res.	TRIMLPOFFSETN				
			rw	rw	rw	rw	rw				rw	rw	rw	rw	rw

Bits 31:13 Reserved, must be kept at reset value.

Bits 12:8 **TRIMLPOFFSETP[4:0]:** Low-power mode trim for PMOS differential pairs

Bits 7:5 Reserved, must be kept at reset value.

Bits 4:0 **TRIMLPOFFSETN[4:0]:** Low-power mode trim for NMOS differential pairs

20.5.4 OPAMP register map

Table 90. OPAMP register map and reset values

Offset	Register	31	30	29	28	27	26	25	24	23	22	21	20	19	18	17	16	15	14	13	12	11	10	9	8	7	6	5	4	3	2	1	0
0x00	**OPAMP1_CSR**	OPA_RANGE	Res.	Res.	Res.	Res.	Res.	Res.	Res.	Res.	Res.	Res.	Res.	Res.	Res.	Res.	Res.	CALOUT	USERTRIM	CALSEL	CALON	Res.	VP_SEL	VM_SEL		Res.	Res.	PGA_GAIN		OPAMODE		OPALPM	OPAEN
	Reset value	0																0	0	0	0		0	0	0			0	0	0	0	0	0
0x04	**OPAMP1_OTR**	Res.	Res.	Res.	Res.	Res.	Res.	Res.	Res.	Res.	Res.	Res.	Res.	Res.	Res.	Res.	Res.	Res.	Res.	Res.	TRIM OFFSETP[4:0]					Res.	Res.	Res.	TRIM OFFSETN[4:0]				
	Reset value																				(1)								(1)				
0x08	**OPAMP1_ LPOTR**	Res.	Res.	Res.	Res.	Res.	Res.	Res.	Res.	Res.	Res.	Res.	Res.	Res.	Res.	Res.	Res.	Res.	Res.	Res.	TRIMLP OFFSETP[4:0]					Res.	Res.	Res.	TRIMLP OFFSETN[4:0]				
	Reset value																				(1)								(1)				

1. Factory trimmed values.

Refer to *Section 2.2.2: Memory map and register boundary addresses* for the register boundary addresses.

21 Liquid crystal display controller (LCD)

This section does not apply to STM32L431xx devices.

21.1 Introduction

The LCD controller is a digital controller/driver for monochrome passive liquid crystal display (LCD) with up to 8 common terminals and up to 44 segment terminals to drive 176 (44x4) or 320 (40x8) LCD picture elements (pixels). The exact number of terminals depends on the device pinout as described in the datasheet.

The LCD is made up of several segments (pixels or complete symbols) which can be turned visible or invisible. Each segment consists of a layer of liquid crystal molecules aligned between two electrodes. When a voltage greater than a threshold voltage is applied across the liquid crystal, the segment becomes visible. The segment voltage must be alternated to avoid an electrophoresis effect in the liquid crystal (which degrades the display). The waveform across a segment must then be generated so as to avoid having a direct current (DC).

Glossary

Bias: Number of voltage levels used when driving an LCD. It is defined as 1/(number of voltage levels used to drive an LCD display - 1).

Boost circuit: Contrast controller circuit

Common: Electrical connection terminal connected to several segments (44 segments).

Duty ratio: Number defined as 1/(number of common terminals on a given LCD display).

Frame: One period of the waveform written to a segment.

Frame rate: Number of frames per second, that is, the number of times the LCD segments are energized per second.

LCD: (liquid crystal display) a passive display panel with terminals leading directly to a segment.

Segment: The smallest viewing element (a single bar or dot that is used to help create a character on an LCD display).

21.2 LCD main features

- Highly flexible frame rate control.
- Supports Static, 1/2, 1/3, 1/4 and 1/8 duty.
- Supports Static, 1/2, 1/3 and 1/4 bias.
- Double buffered memory allows data in LCD_RAM registers to be updated at any time by the application firmware without affecting the integrity of the data displayed.
  - LCD data RAM of up to 16 x 32-bit registers which contain pixel information (active/inactive)
- Software selectable LCD output voltage (contrast) from V_{LCDmin} to V_{LCDmax}.
- No need for external analog components:
  - A step-up converter is embedded to generate an internal V_{LCD} voltage higher than V_{DD}
  - Software selection between external and internal V_{LCD} voltage source. In case of an external source, the internal boost circuit is disabled to reduce power consumption
  - A resistive network is embedded to generate intermediate V_{LCD} voltages
  - The structure of the resistive network is configurable by software to adapt the power consumption to match the capacitive charge required by the LCD panel
  - Integrated voltage output buffers for higher LCD driving capability.
- The contrast can be adjusted using two different methods:
  - When using the internal step-up converter, the software can adjust V_{LCD} between V_{LCDmin} and V_{LCDmax}.
  - Programmable dead time (up to 8 phase periods) between frames.
- Full support of low-power modes: the LCD controller can be displayed in Sleep, Low-power run, Low-power sleep and Stop modes or can be fully disabled to reduce power consumption.
- Built in phase inversion for reduced power consumption and EMI (electromagnetic interference).
- Start of frame interrupt to synchronize the software when updating the LCD data RAM.
- Blink capability:
  - Up to 1, 2, 3, 4, 8 or all pixels which can be programmed to blink at a configurable frequency
  - Software adjustable blink frequency to achieve around 0.5 Hz, 1 Hz, 2 Hz or 4 Hz.
- Used LCD segment and common pins should be configured as GPIO alternate functions and unused segment and common pins can be used for general purpose I/O or for another peripheral alternate function.

Note: When the LCD relies on the internal step-up converter, the VLCD pin should be connected to V_{SS} with a capacitor. Its typical value is 1 µF (see C_{EXT} value in the product datasheets for further information).

21.3 LCD functional description

21.3.1 General description

The LCD controller has five main blocks (see *Figure 128*):

Figure 128. LCD controller block diagram

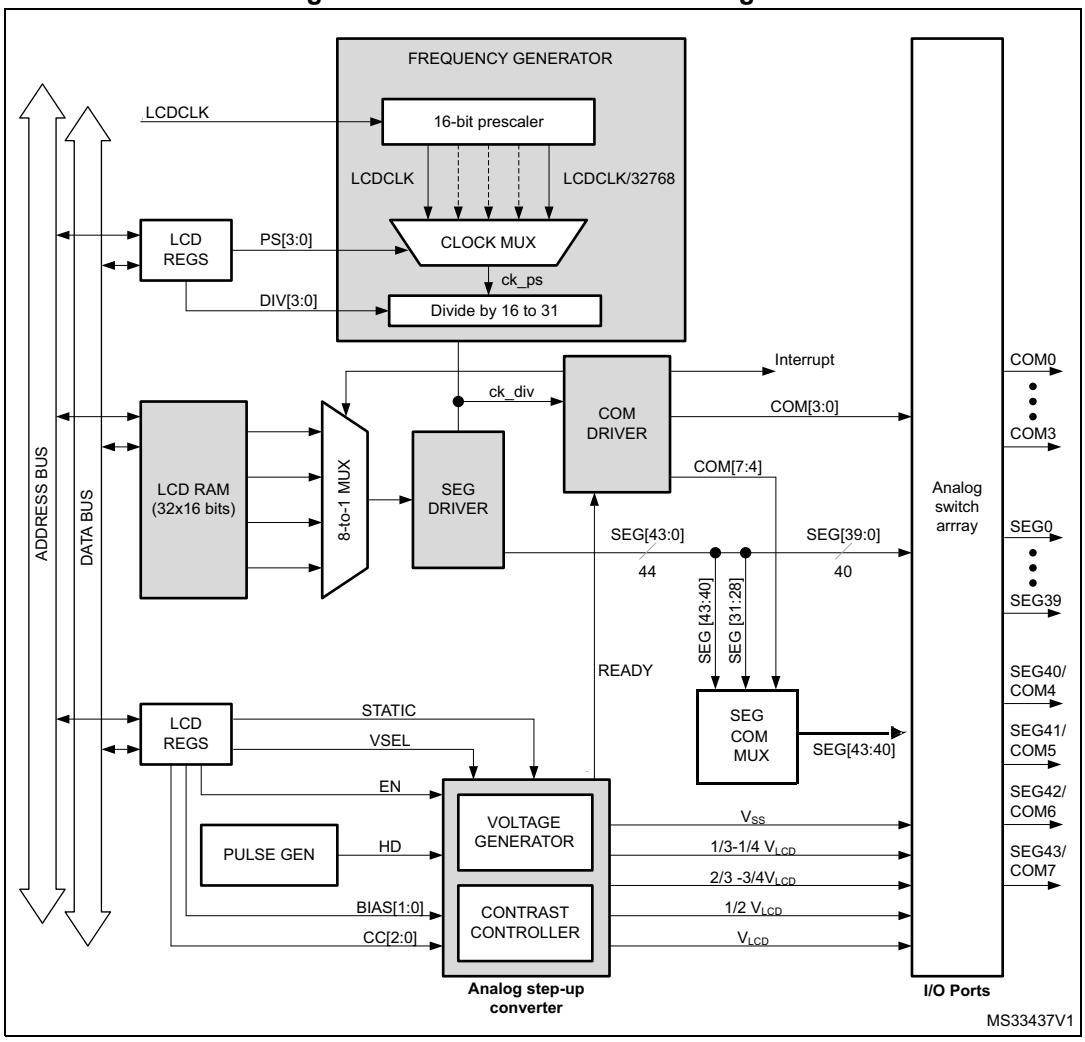

Note: LCDCLK is the same as RTCCLK. Please refer to the RTC/LCD clock description in the RCC section of this manual.

The frequency generator allows you to achieve various LCD frame rates starting from an LCD input clock frequency (LCDCLK) which can vary from 32 kHz up to 1 MHz.

3 different clock sources can be used to provide the LCD clock (LCDCLK/RTCCLK):

- 32 kHz Low speed external RC (LSE)
- 32 kHz Low speed internal RC (LSI)
- High speed external (HSE) divided by 32

21.3.2 Frequency generator

This clock source must be stable in order to obtain accurate LCD timing and hence minimize DC voltage offset across LCD segments. The input clock LCDCLK can be divided by any value from 1 to 2^{15}x 31 (see *Section 21.6.2: LCD frame control register (LCD_FCR) on page 551*). The frequency generator consists of a prescaler (16-bit ripple counter) and a 16 to 31 clock divider. The PS[3:0] bits, in the LCD_FCR register, select LCDCLK divided by $2^{PS[3:0]}$. If a finer resolution rate is required, the DIV[3:0] bits, in the LCD_FCR register, can be used to divide the clock further by 16 to 31. In this way you can roughly scale the frequency, and then fine-tune it by linearly scaling the clock with the counter. The output of the frequency generator block is f_{ck_div} which constitutes the time base for the entire LCD controller. The ck_div frequency is equivalent to the LCD phase frequency, rather than the frame frequency (they are equal only in case of static duty). The frame frequency (f_{frame}) is obtained from f_{ck_div} by dividing it by the number of active common terminals (or by multiplying it for the duty). Thus the relation between the input clock frequency (f_{LCDCLK}) of the frequency generator and its output clock frequency f_{ck_div} is:

$$f_{ckdiv} = \frac{f_{LCDCLK}}{2^{PS} \times (16 + DIV)}$$

$$f_{frame} = f_{ckdiv} \times duty$$

This makes the frequency generator very flexible. An example of frame rate calculation is shown in *Table 91*.

Table 91. Example of frame rate calculation

LCDCLK	PS[3:0]	DIV[3:0]	Ratio	Duty	f_{frame}
32.768 kHz	3	1	136	1/8	30.12 Hz
32.768 kHz	4	1	272	1/4	30.12 Hz
32.768 kHz	4	6	352	1/3	31.03 Hz
32.768 kHz	5	1	544	1/2	30.12 Hz
32.768 kHz	6	1	1088	static	30.12 Hz
32.768 kHz	1	4	40	1/8	102.40 Hz
32.768 kHz	2	4	80	1/4	102.40 Hz
32.768 kHz	2	11	108	1/3	101.14 Hz
32.768 kHz	3	4	160	1/2	102.40 Hz
32.768 kHz	4	4	320	static	102.40 Hz
1.00 MHz	6	3	1216	1/8	102.80 Hz
1.00 MHz	7	3	2432	1/4	102.80 Hz
1.00 MHz	7	10	3328	1/3	100.16 Hz
1.00 MHz	8	3	4864	1/2	102.80 Hz
1.00 MHz	9	3	9728	static	102.80 Hz

The frame frequency must be selected to be within a range of around ~30 Hz to ~100 Hz and is a compromise between power consumption and the acceptable refresh rate. In

addition, a dedicated blink prescaler selects the blink frequency. This frequency is defined as:

$f_{BLINK} = f_{ck_div}/2^{(BLINKF + 3)}$,

with BLINKF[2:0] = 0, 1, 2, ... ,7

The blink frequency achieved is in the range of 0.5 Hz, 1 Hz, 2 Hz or 4 Hz.

21.3.3 Common driver

Common signals are generated by the common driver block (see *Figure 128*).

COM signal bias

Each COM signal has identical waveforms, but different phases. It has its max amplitude V_{LCD} or V_{SS} only in the corresponding phase of a frame cycle, while during the other phases, the signal amplitude is:

- 1/4 V_{LCD} or 3/4 V_{LCD} in case of 1/4 bias
- 1/3 V_{LCD} or 2/3 V_{LCD} in case of 1/3 bias
- and 1/2 V_{LCD} in case of 1/2 bias.

Selection between 1/2, 1/3 and 1/4 bias mode can be done through the BIAS bits in the LCD_CR register.

A pixel is activated when both of its corresponding common and segment lines are active during the same phase, it means when the voltage difference between common and segment is maximum during this phase. Common signals are phase inverted in order to reduce EMI. As shown in *Figure 129*, with phase inversion, there is a mean voltage of 1/2 V_{LCD} at the end of every odd cycle.

Figure 129. 1/3 bias, 1/4 duty

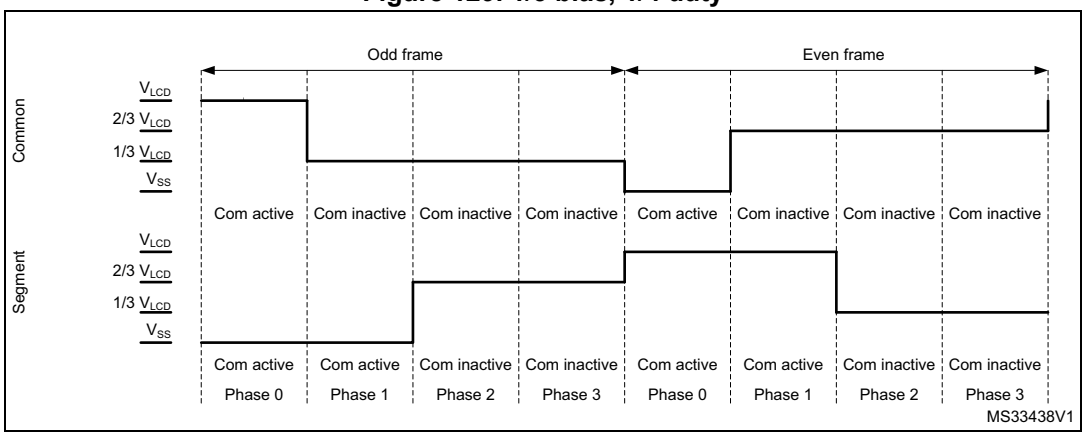

In case of 1/2 bias (BIAS = 01) the VLCD pin generates an intermediate voltage equal to 1/2 V_{LCD} on node b for odd and even frames (see *Figure 132*).

COM signal duty

Depending on the DUTY[2:0] bits in the LCD_CR register, the COM signals are generated with static duty (see *Figure 131*), 1/2 duty (see *Figure 132*), 1/3 duty (see *Figure 133*), 1/4 duty (see *Figure 134*) or 1/8 duty (see *Figure 135*).

COM[*n*] *n*[0 to 7] is active during phase *n* in the odd frame, so the COM pin is driven to V_{LCD}.

During phase *n* of the even frame the COM pin is driven to V_{SS}.

In the case of 1/3 or 1/4) bias:

- COM[*n*] is inactive during phases other than n so the COM pin is driven to 1/3 (1/4) V_{LCD} during odd frames and to 2/3 (3/4) V_{LCD} during even frames

In the case of 1/2 bias:

- If COM[*n*] is inactive during phases other than n, the COM pin is always driven (odd and even frame) to 1/2 V_{LCD}.

When static duty is selected, the segment lines are not multiplexed, which means that each segment output corresponds to one pixel. In this way only up to 44 pixels can be driven. COM[0] is always active while COM[7:1] are not used and are driven to V_{SS}.

When the LCDEN bit in the LCD_CR register is reset, all common lines are pulled down to V_{SS} and the ENS flag in the LCD_SR register becomes 0. Static duty means that COM[0] is always active and only two voltage levels are used for the segment and common lines: V_{LCD} and V_{SS}. A pixel is active if the corresponding SEG line has a voltage opposite to that of the COM, and inactive when the voltages are equal. In this way the LCD has maximum contrast (see *Figure 130*, *Figure 131*). In the *Figure 130* pixel 0 is active while pixel 1 is inactive.

Figure 130. Static duty case 1

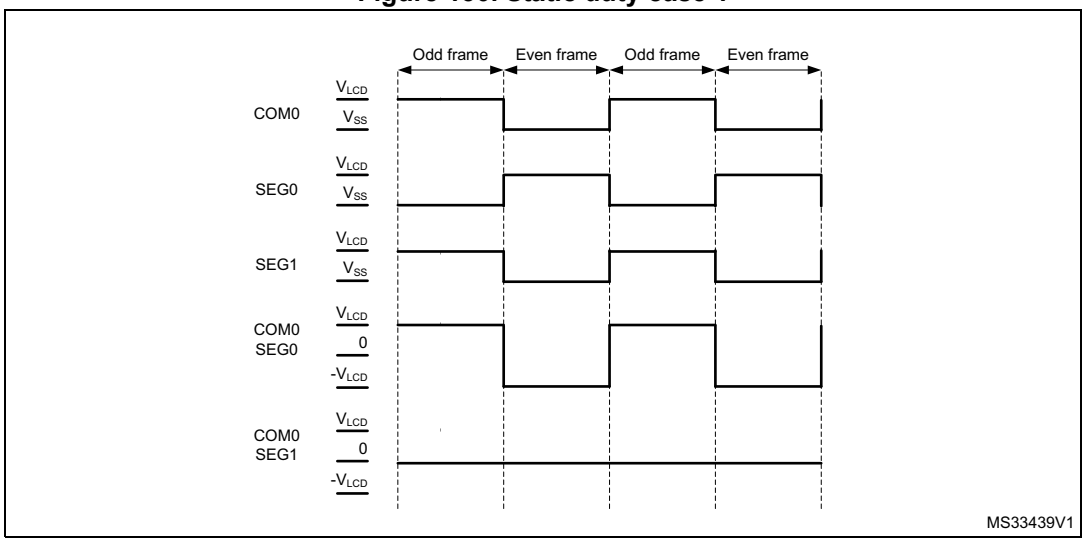

In each frame there is only one phase, this is why f_{frame} is equal to f_{LCD}. If 1/4 duty is selected there are four phases in a frame in which COM[0] is active during phase 0, COM[1] is active during phase 1, COM[2] is active during phase 2, and COM[3] is active during phase 3.

Figure 131. Static duty case 2

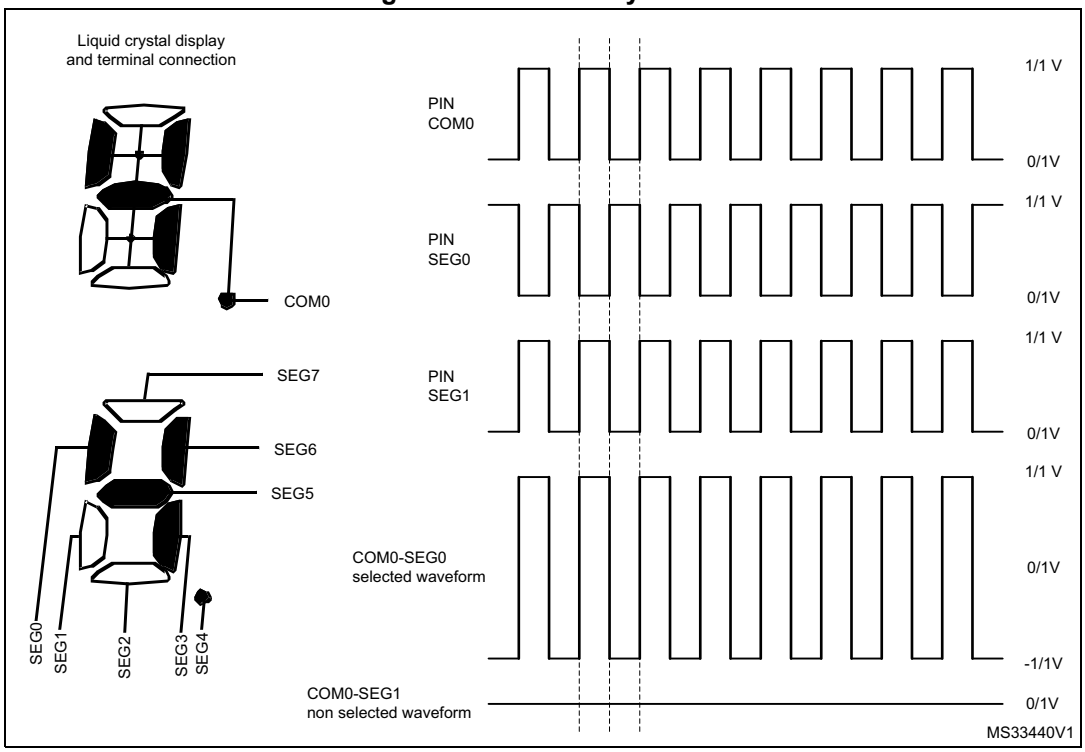

In this mode, the segment terminals are multiplexed and each of them control four pixels. A pixel is activated only when both of its corresponding SEG and COM lines are active in the same phase. In case of 1/4 duty, to deactivate pixel 0 connected to COM[0] the SEG[0] needs to be inactive during the phase 0 when COM[0] is active. To activate pixel 0 connected to COM[1], the SEG[0] needs to be active during phase 1 when COM[1] is active (see *Figure 134*). To activate pixels from 0 to 43 connected to COM[0], SEG[0:43] need to be active during phase 0 when COM[0] is active. These considerations can be extended to the other pixels.

8 to 1 Mux

When COM[0] is active the common driver block, also drives the 8 to 1 mux shown in *Figure 128* in order to select the content of first two RAM register locations. When *COM[7]* is active, the output of the 8 to 1 mux is the content of the last two RAM locations.

Figure 132. 1/2 duty, 1/2 bias

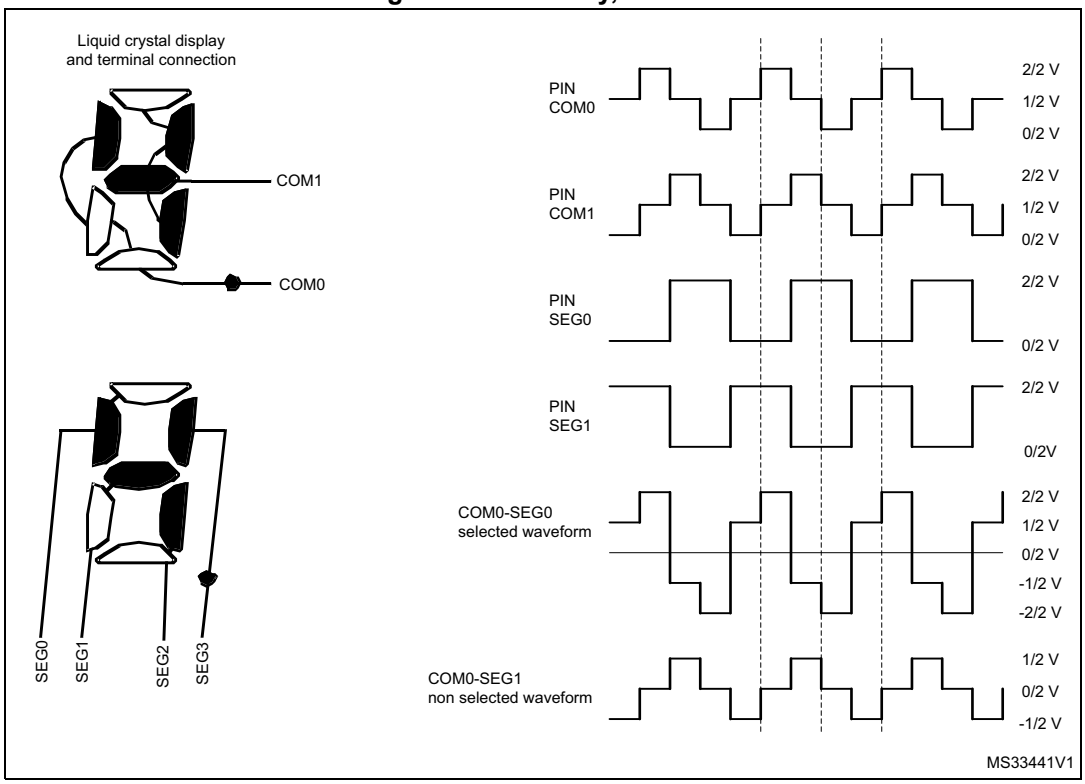

21.3.4 Segment driver

The segment driver block controls the SEG lines according to the pixel data coming from the 8 to 1 mux driven in each phase by the common driver block.

In the case of 1/4 or 1/8 duty

When COM[0] is active, the pixel information (active/inactive) related to the pixel connected to COM[0] (content of the first two LCD_RAM locations) goes through the 8 to 1 mux.

The SEG[*n*] pin *n* [0 to 43] is driven to V_{SS} (indicating pixel *n* is active when COM[0] is active) in phase 0 of the odd frame.

The SEG[*n*] pin is driven to V_{LCD} in phase 0 of the even frame. If pixel *n* is inactive then the SEG[*n*] pin is driven to 2/3 (2/4) V_{LCD} in the odd frame or 1/3 (2/4) V_{LCD} in the even frame (current inversion in V_{LCD} pad) (see *Figure 129*).

In case of 1/2 bias, if the pixel is inactive the SEG[*n*] pin is driven to V_{LCD} in the odd and to V_{SS} in the even frame.

When the LCD controller is disabled (LCDEN bit cleared in the LCD_CR register) then the SEG lines are pulled down to V_{SS}.

Figure 133. 1/3 duty, 1/3 bias

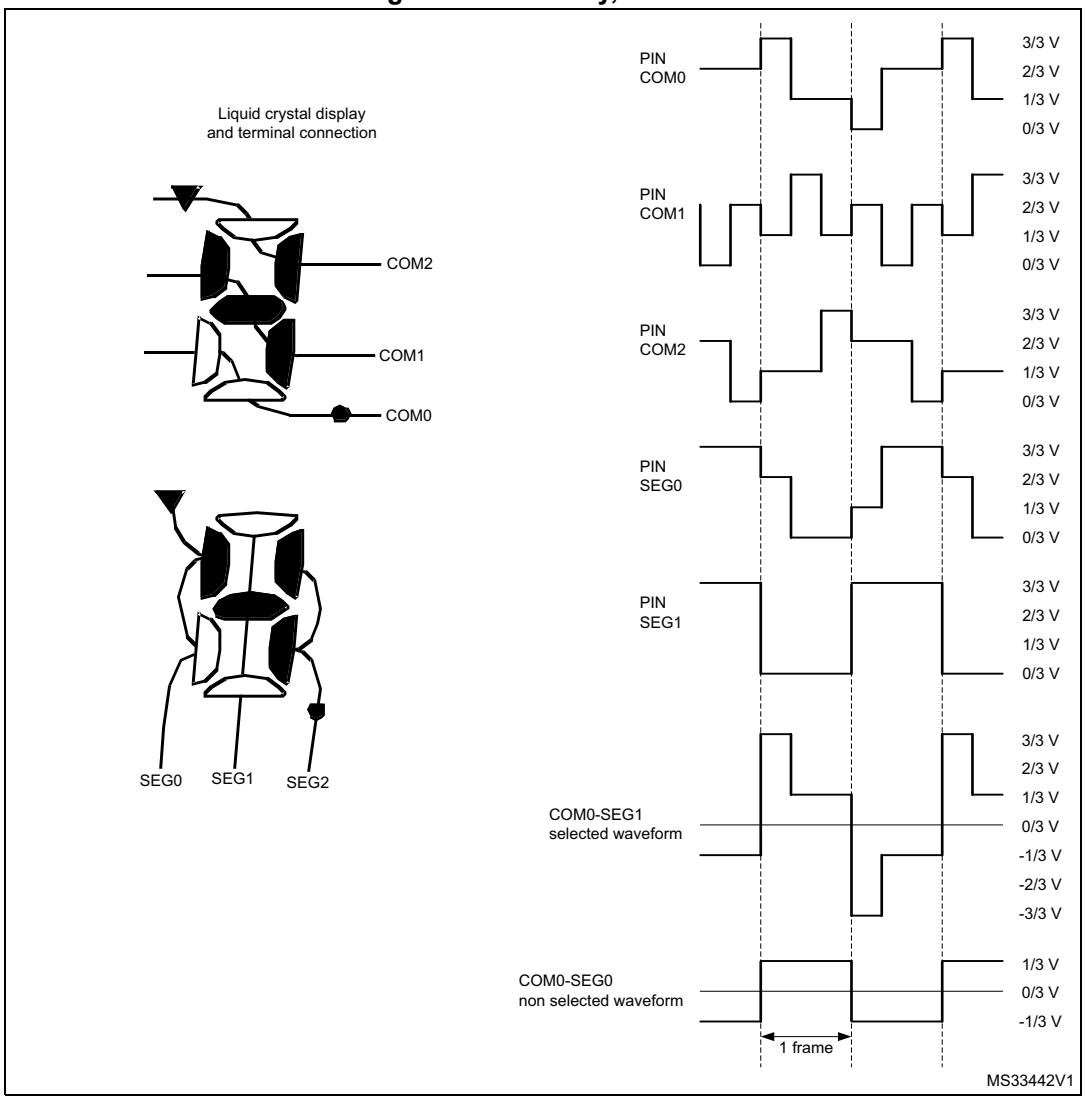

Figure 134. 1/4 duty, 1/3 bias

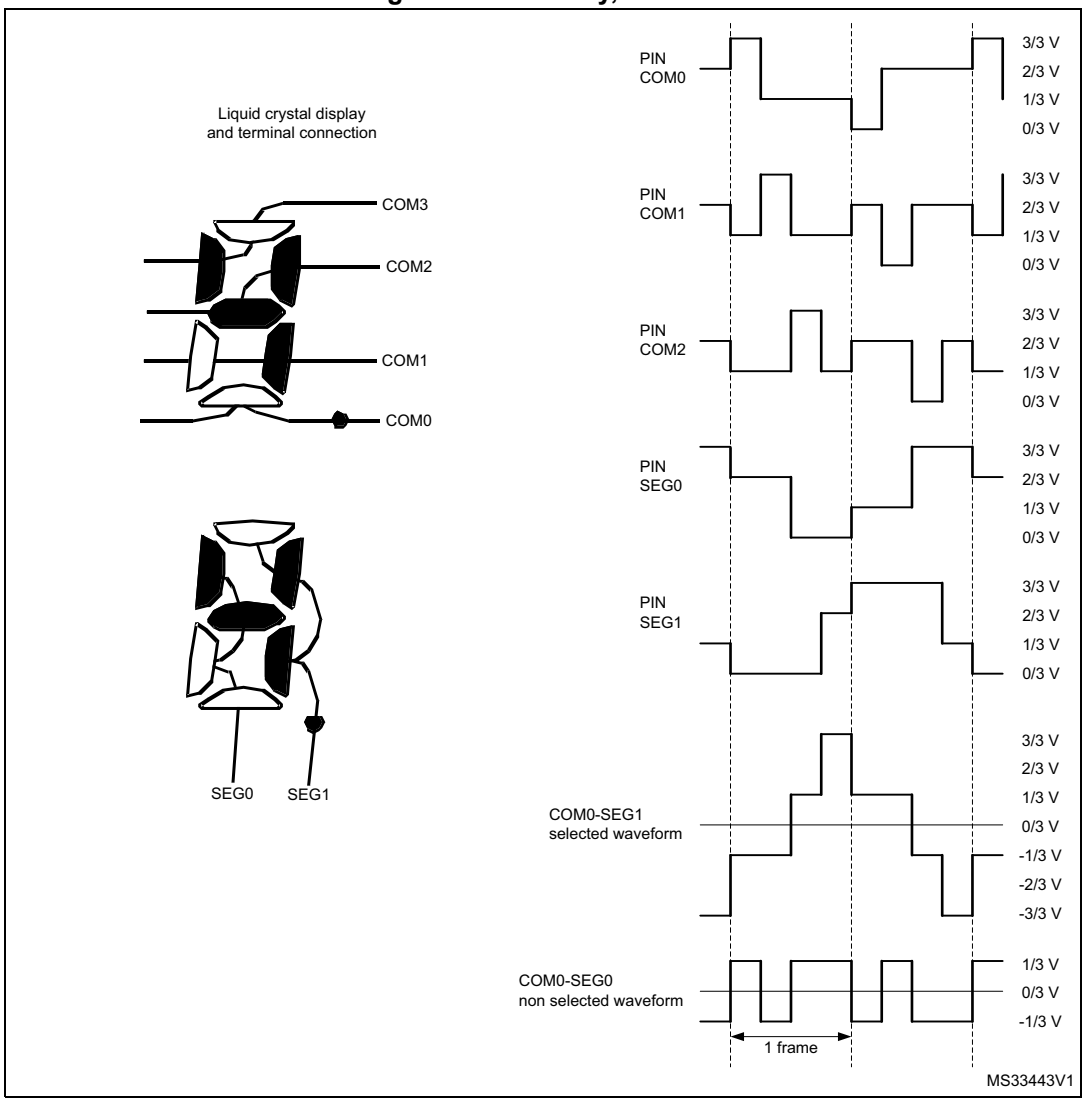

Figure 135. 1/8 duty, 1/4 bias

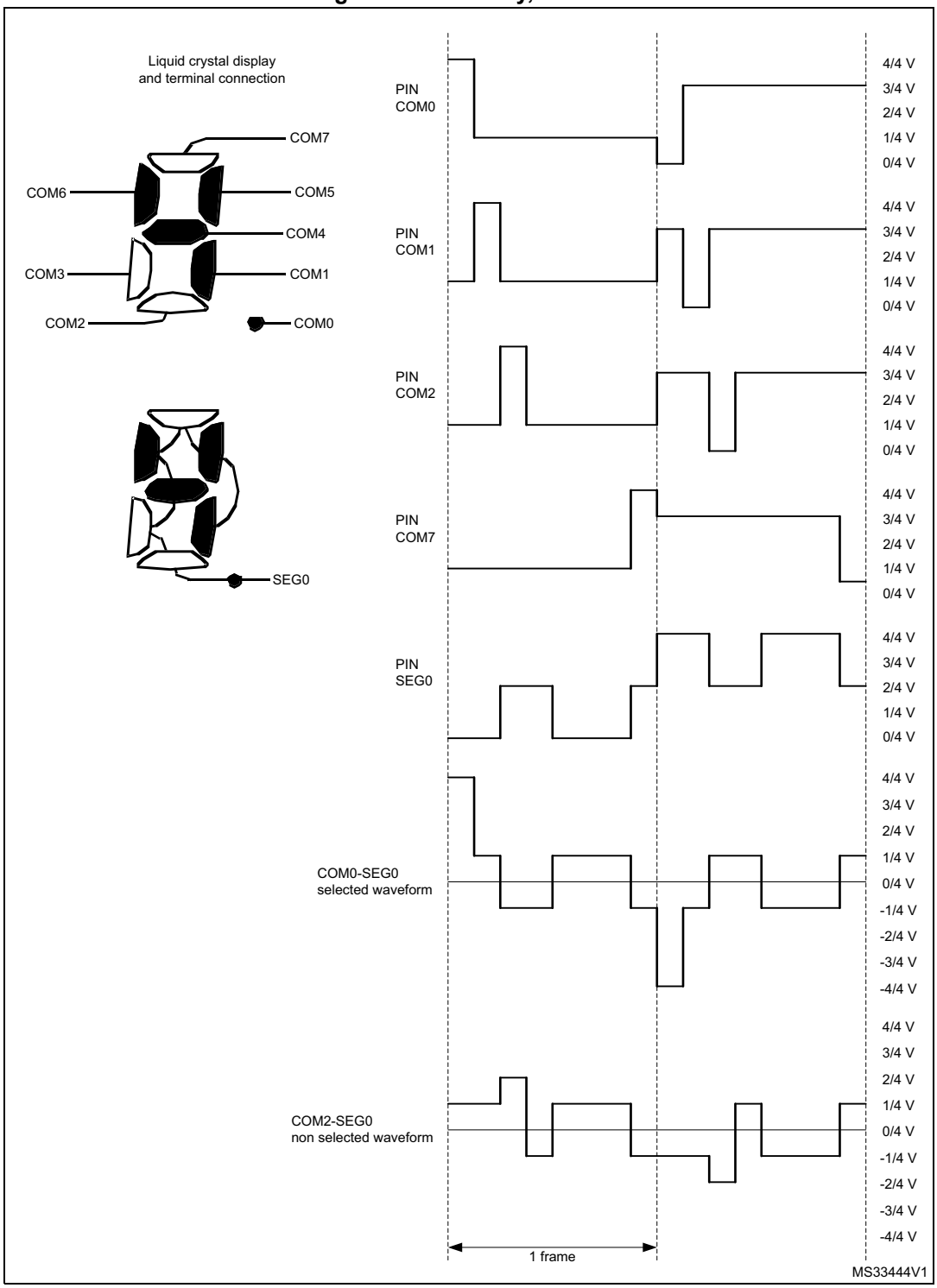

Blink

The segment driver also implements a programmable blink feature to allow some pixels to continuously switch on at a specific frequency. The blink mode can be configured by the BLINK[1:0] bits in the LCD_FCR register, making possible to blink up to 1, 2, 4, 8 or all pixels (see *Section 21.6.2: LCD frame control register (LCD_FCR)*). The blink frequency can be selected from eight different values using the BLINKF[2:0] bits in the LCD_FCR register.

Table 92 gives examples of different blink frequencies (as a function of ck_div frequency).

Table 92. Blink frequency

BLINKF[2:0] bits			ck_div frequency (with LCDCLK frequency of 32.768 kHz)			
			32 Hz	64 Hz	128 Hz	256 Hz
0	0	0	4.0 Hz	N/A	N/A	N/A
0	0	1	2.0 Hz	4.0 Hz	N/A	N/A
0	1	0	1.0 Hz	2.0 Hz	4.0 Hz	N/A
0	1	1	0.5 Hz	1.0 Hz	2.0 Hz	4.0 Hz
1	0	0	0.25 Hz	0.5 Hz	1.0 Hz	2.0 Hz
1	0	1	N/A	0.25 Hz	0.5 Hz	1.0 Hz
1	1	0	N/A	N/A	0.25 Hz	0.5 Hz
1	1	1	N/A	N/A	N/A	0.25 Hz

21.3.5 Voltage generator and contrast control

LCD supply source

The LCD power supply source may come from either the internal step-up converter or from an external voltage applied on the VLCD pin. Internal or external voltage source can be selected using the VSEL bit in the LCD_CR register. In case of external source selected, the internal boost circuit (step-up converter) is disabled to reduce power consumption.

When the step-up converter is selected as V_{LCD} source, the V_{LCD} value can be chosen among a wide set of values from V_{LCDmin} to V_{LCDmax} by means of CC[2:0] (Contrast Control) bits inside LCD_FCR (see *Section 21.6.2*) register. New values of V_{LCD} takes effect every beginning of a new frame.

When external power source is selected as V_{LCD} source, the V_{LCD} voltage must be chosen in the range of V_{LCDmin} to V_{LCDmax} (see datasheets). The contrast can then be controlled by programming a dead time between frames (see *Deadtime on page 542*).

A specific software sequence must be performed to configure the LCD depending on the LCD power supply source to be used. Here we consider the LCD controller is disabled prior to the configuration sequence.

In case the internal step-up converter is used (capacitor C_{EXT} on VLCD pin is required):

- Configure the VLCD pin as alternate function LCD in the GPIO_AFR register.
- Wait for the external capacitor C_{EXT} to be charged (C_{EXT} connected to the VLCD pin, approximately 2 ms for C_{EXT} = 1 µF)
- Set voltage source to internal source by resetting VSEL bit in the LCD_CR register
- Enable the LCD controller by setting LCDEN bit in the LCD_CR register

In case of LCD external power source is used:

- Set voltage source to external source by setting VSEL bit in the LCD_CR register
- Configure the VLCD pin as alternate function LCD in the GPIO_AFR register
- Enable the LCD controller by setting LCDEN bit in the LCD_CR register

LCD intermediate voltages

The LCD intermediate voltage levels are generated through an internal resistor divider network as shown in *Figure 136*.

The LCD voltage generator issues intermediate voltage levels between V_{SS} and V_{LCD}:

- 1/3 V_{LCD} and 2/3 V_{LCD} in case of 1/3 bias
- 1/4 V_{LCD}, 2/4 V_{LCD} and 3/4 V_{LCD} in case of 1/4 bias
- only 1/2 V_{LCD} in case of 1/2 bias.

LCD drive selection

Two resistive networks, one with low value resistors (R_L) and one with high value resistors (R_H) are respectively used to increase the current during transitions and reduce power consumption in static state.

The EN switch follows the rules described below (see *Figure 136*):

- If LCDEN bit in the LCD_CR register is set, the EN switch is closed.
- When clearing the LCDEN bit in the LCD_CR register, the EN switch is open at the end of the even frame in order to avoid a medium voltage level different from 0 considering the entire frame odd plus even.

The PON[2:0] (Pulse ON duration) bits in the LCD_FCR register configure the time during which R_L is enabled through the HD (high drive) switch when the levels of the common and segment lines change (see *Figure 136*). A short drive time will lead to lower power consumption, but displays with high internal resistance may need a longer drive time to achieve satisfactory contrast.

Figure 136. LCD voltage control

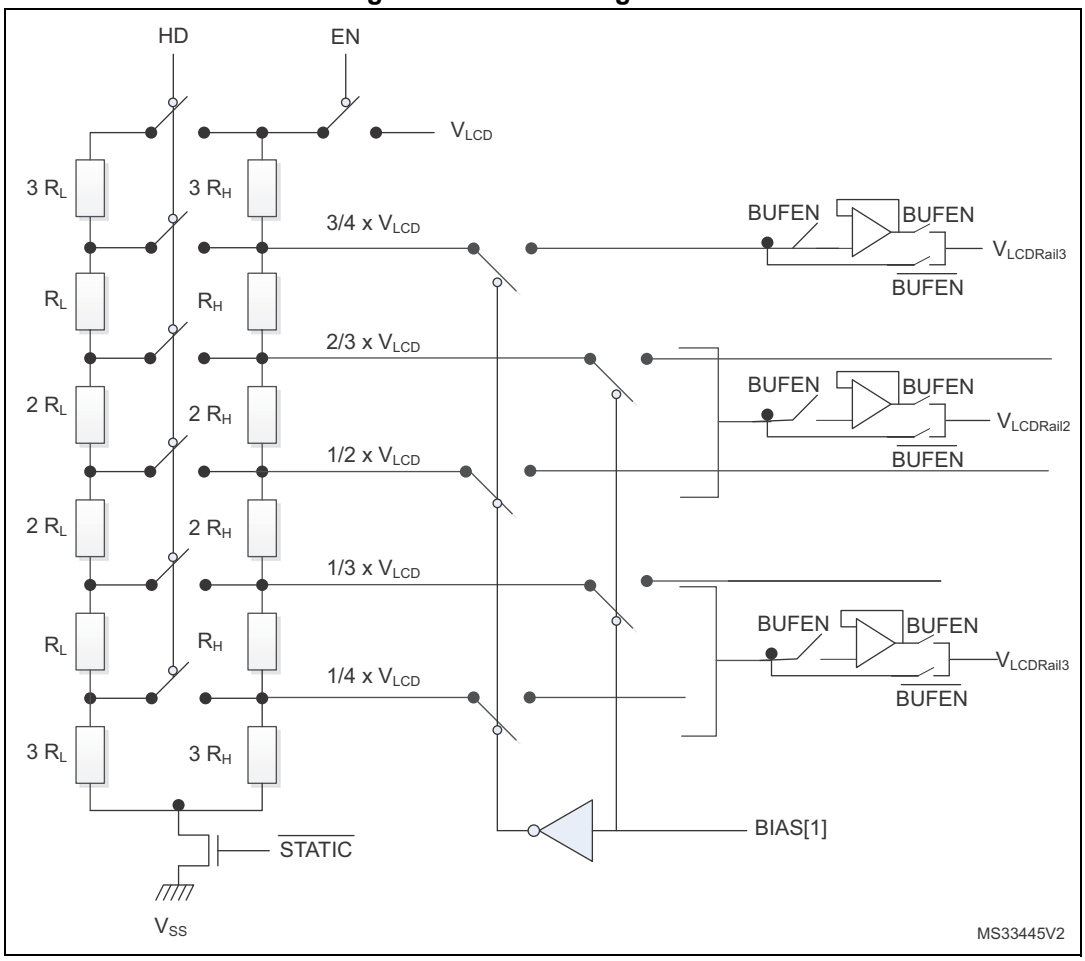

1. R_{LN} and R_{HN} are the low value resistance network and the high value resistance network, respectively.

The R_{LN} divider can be always switched on using the HD bit in the LCD_FCR configuration register (see *Section 21.6.2*).

The HD switch follows the rules described below:

- If the HD bit and the PON[2:0] bits in the LCD_FCR register are reset, then HD switch is open.
- If the HD bit in the LCD_FCR register is reset and the PON[2:0] bits in the LCD_FCR are different from 00 then, the HD switch is closed during the number of pulses defined in the PON[2:0] bits.
- If HD bit in the LCD_FCR register is 1 then HD switch is always closed.

Buffered mode

When voltage output buffers are enabled by setting BUFEN bit in the LCD_CR register, LCD driving capability is improved as buffers prevent the LCD capacitive loads from loading the resistor bridge unacceptably and interfering with its voltage generation. As a result we obtain more stable intermediate voltage levels thus improving RMS voltage applied to the LCD pixels.

In buffer mode, intermediate voltages are generated by the high value resistor bridge R_{HN} to reduce power consumption, the low value resistor bridge R_{LN} is automatically disabled whatever the HD bit or PON bits configuration.

Buffers can be used independently of the V_{LCD} supply source (internal or external) but can only be enabled or disabled when LCD controller is not activated.

After the LCDEN bit is activated, the RDY bit is set in the LCD_SR register to indicate that voltage levels are stable and the LCD controller can start to work.

Deadtime

In addition to using the CC[2:0] bits, the contrast can be controlled by programming a dead time between each frame. During the dead time the COM and SEG values are put to V_{SS}. The DEAD[2:0] bits in the LCD_FCR register can be used to program a time of up to eight phase periods. This dead time reduces the contrast without modifying the frame rate.

Figure 137. Deadtime

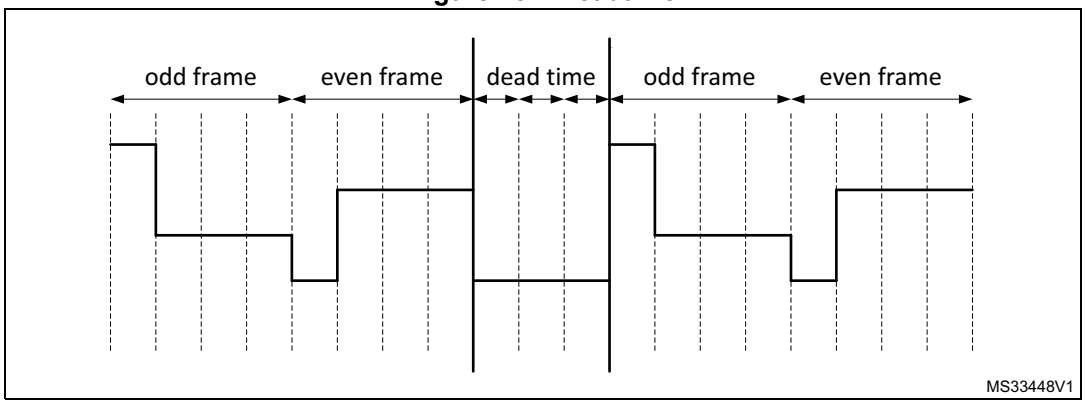

21.3.6 Double buffer memory

Using its double buffer memory the LCD controller ensures the coherency of the displayed information without having to use interrupts to control LCD_RAM modification.

The application software can access the first buffer level (LCD_RAM) through the APB interface. Once it has modified the LCD_RAM, it sets the UDR flag in the LCD_SR register. This UDR flag (update display request) requests the updated information to be moved into the second buffer level (LCD_DISPLAY).

This operation is done synchronously with the frame (at the beginning of the next frame), until the update is completed, the LCD_RAM is write protected and the UDR flag stays high. Once the update is completed another flag (UDD - Update Display Done) is set and generates an interrupt if the UDDIE bit in the LCD_FCR register is set.

The time it takes to update LCD_DISPLAY is, in the worst case, one odd and one even frame.

The update will not occur (UDR = 1 and UDD = 0) until the display is enabled (LCDEN = 1)

21.3.7 COM and SEG multiplexing

Output pins versus duty modes

The output pins consists of:

- SEG[43:0]
- COM[3:0]

Depending on the duty configuration, the COM and SEG output pins may have different functions:

- In static, 1/2, 1/3 and 1/4 duty modes there are up to 44 SEG pins and respectively 1, 2, 3 and 4 COM pins
- In 1/8 duty mode (DUTY[2:0] = 100), COM[7:4] outputs are available on the SEG[43:40] pins, reducing to the number of available segments to 40.

Remapping capability for small packages

Additionally, it is possible to remap 4 segments by setting the MUX_SEG bit in the LCD_CR register. This is particularly useful when using smaller device types with fewer external pins. When MUX_SEG is set, output pins SEG[43:40] have the same function as SEG[31:28].

This feature is available only if the mode 1/8 duty is not selected.

Check the availability of this feature referring to the pinout section of the product datasheet.

For the considered package, check the availability of the SEG/COM multiplexing pin as follow:

LCD_SEG[n-1]/LCD_COM7/LCD_SEG[31]

LCD_SEG[n-2]/LCD_COM6/LCD_SEG[30]

LCD_SEG[n-3]/LCD_COM5/LCD_SEG[29]

LCD_SEG[n-4]/LCD_COM4/LCD_SEG[28]

with n = number of segment for the considered package.

Summary of COM and SEG functions versus duty and remap

All the possible ways of multiplexing the COM and SEG functions are described in *Table 93*. *Figure 138* gives examples showing the signal connections to the external pins.

Table 93. Remapping capability

Configuration bits		SEG x COM	Output pin	Function
DUTY	MUX_SEG			
1/8	0/1	40x8	SEG[43:40]/SEG[31:28]/COM[7:4]	COM[7:4]
			COM[3:0]	COM[3:0]
			SEG[39:0]	SEG[39:0]
	0/1	28x8	SEG[43:40]/SEG[31:28]/COM[7:4]	COM[7:4]
			COM[3:0]	COM[3:0]
			SEG[27:0]	SEG[27:0]
1/4	0	44x4	COM[3:0]	COM[3:0]
			SEG[43:40]/SEG[31:28]/COM[7:4]	SEG[43:40]
			SEG[39:0]	SEG[39:0]
	1	40x4	COM[3:0]	COM[3:0]
			SEG[43:40]/SEG[31:28]/COM[7:4]	SEG[31:28]
			SEG[39:32]	SEG[39:32]
			SEG[31:28]	not used
			SEG[27:0]	SEG[27:0]
	0	28x4	COM[3:0]	COM[3:0]
			SEG[43:40]/SEG[31:28]/COM[7:4]	not used
			SEG[27:0]	SEG[27:0]
	1	32x4	COM[3:0]	COM[3:0]
			SEG[43:40]/SEG[31:28]/COM[7:4]	SEG[31:28]
			SEG[27:0]	SEG[27:0]

Table 93. Remapping capability (continued)

Configuration bits		SEG x COM	Output pin	Function
DUTY	MUX_SEG			
1/3	0	44x3	COM3	not used
			COM[2:0]	COM[2:0]
			SEG[43:40]/SEG[31:28]/COM[7:4]	SEG[43:40]
			SEG[39:0]	SEG[39:0]
	1	40x3	COM3	not used
			COM[2:0]	COM[2:0]
			SEG[43:40]/SEG[31:28]/COM[7:4]	SEG[31:28]
			SEG[39:32]	SEG[39:32]
			SEG[31:28]	not used
			SEG[27:0]	SEG[27:0]
	0	28x3	COM3	not used
			COM[2:0]	COM[2:0]
			SEG[43:40]/SEG[31:28]/COM[7:4]	not used
			SEG[31:0]	SEG[31:0]
	1	32x3	COM3	not used
			COM[2:0]	COM[2:0]
			SEG[43:40]/SEG[31:28]/COM[7:4]	SEG[31:28]
			SEG[27:0]	SEG[27:0]
1/2	0	44x2	COM[3:2]	not used
			COM[1:0]	COM[1:0]
			SEG[43:40]/SEG[31:28]/COM[7:4]	SEG[43:40]
			SEG[39:0]	SEG[39:0]
	1	40x2	COM[3:2]	not used
			COM[1:0]	COM[1:0]
			SEG[43:40]/SEG[31:28]/COM[7:4]	SEG[31:28]
			SEG[39:32]	SEG[39:32]
			SEG[31:28]	not used
			SEG[27:0]	SEG[27:0]

Table 93. Remapping capability (continued)

Configuration bits		SEG x COM	Output pin	Function
DUTY	MUX_SEG			
1/2	0	28x2	COM[3:2]	not used
			COM[1:0]	COM[1:0]
			SEG[43:40]/SEG[31:28]/COM[7:4]	not used
			SEG[27:0]	SEG[27:0]
	1	32x2	COM[3:2]	not used
			COM[1:0]	COM[1:0]
			SEG[43:40]/SEG[31:28]/COM[7:4]	SEG[31:28]
			SEG[27:0]	SEG[27:0]
STATIC	0	44x1	COM[3:1]	not used
			COM0	COM0
			SEG[43:40]/SEG[31:28]/COM[7:4]	SEG[43:40]
			SEG[39:0]	SEG[39:0]
	1	40x1	COM[3:1]	not used
			COM0	COM0
			SEG[43:40]/SEG[31:28]/COM[7:4]	SEG[31:28]
			SEG[39:32]	SEG[39:32]
			SEG[31:28]	not used
			SEG[27:0]	SEG[27:0]
	0	28x1	COM[3:1]	not used
			COM0	COM0
			SEG[43:40]/SEG[31:28]/COM[7:4]	not used
			SEG[27:0]	SEG[27:0]
	1	32x1	COM[3:1]	not used
			COM0	COM0
			SEG[43:40]/SEG[31:28]/COM[7:4]	SEG[31:28]
			SEG[27:0]	SEG[27:0]

Figure 138. SEG/COM mux feature example

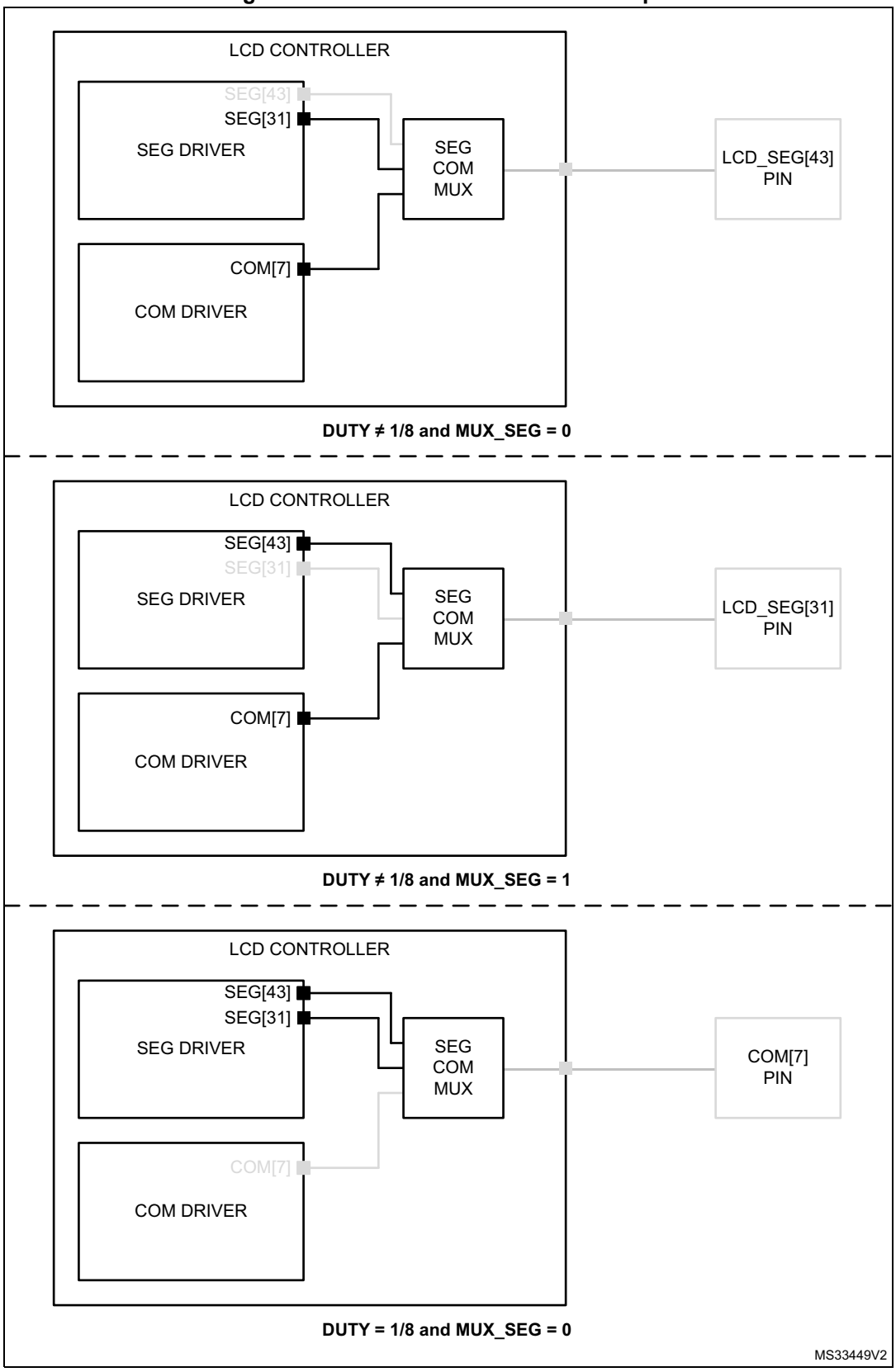

21.3.8 Flowchart

Figure 139. Flowchart example

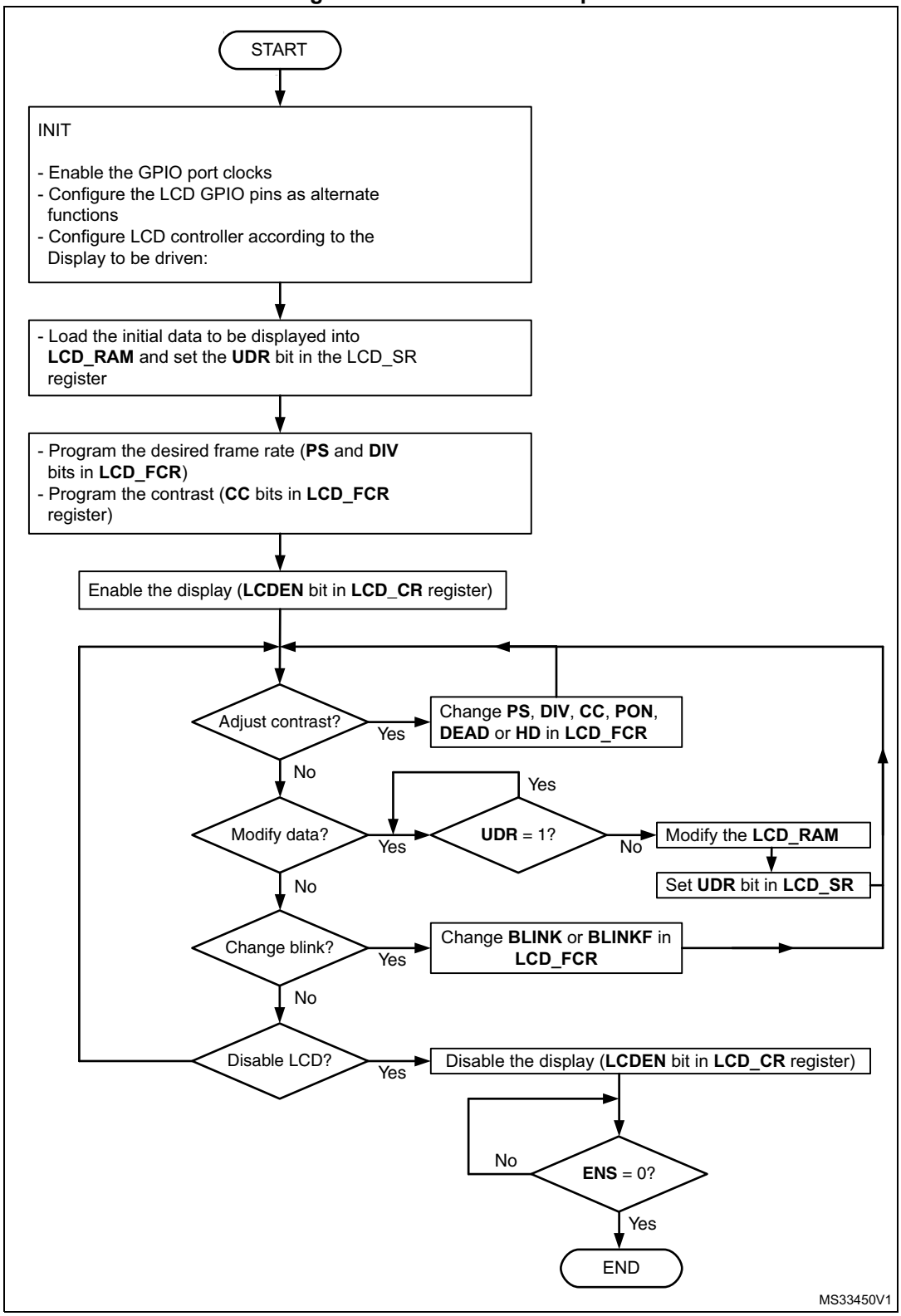

21.4 LCD low-power modes

the LCD controller can be displayed in Stop mode or can be fully disabled to reduce power consumption.

Table 94. LCD behavior in low-power modes

Mode	Description
Sleep	No effect. LCD interrupt causes the device to exit the Sleep mode.
Low-power run	No effect.
Low-power sleep	No effect. LCD interrupt causes the device to exit the Low-power sleep mode.
Stop 0	No effect. LCD interrupt causes the device to exit the Stop mode.
Stop 1	
Stop 2	
Standby	The LCD peripheral is powered down and must be reinitialized after exiting Standby or Shutdown mode.
Shutdown	

21.5 LCD interrupts

The table below gives the list of LCD interrupt requests.

Table 95. LCD interrupt requests

Interrupt event	Event flag	Event flag/Interrupt clearing method	Interrupt enable control bit
Start Of Frame (SOF)	SOF	Write SOFC =1	SOFIE
Update Display Done (UDD)	UDD	Write UDDC = 1	UDDIE

Start of frame (SOF)

The LCD start of frame interrupt is executed if the SOFIE (start of frame interrupt enable) bit is set (see *Section 21.6.2: LCD frame control register (LCD_FCR)*). SOF is cleared by writing the SOFC bit to 1 in the LCD_CLR register when executing the corresponding interrupt handling vector.

Update display done (UDD)

The LCD update display interrupt is executed if the UDDIE (update display done interrupt enable) bit is set (see *Section 21.6.2: LCD frame control register (LCD_FCR)*). UDD is cleared by writing the UDDC bit to 1 in the LCD_CLR register when executing the corresponding interrupt handling vector.

Depending on the product implementation, all these interrupts events can either share the same interrupt vector (LCD global interrupt), or be grouped into 2 interrupt vectors (LCD SOF interrupt and LCD UDD interrupt). Refer to the *Table 45: STM32L431/433/443 vector table* for details.

In order to enable the LCD interrupts, the following sequence is required:

1. Configure and enable the LCD IRQ channel in the NVIC
2. Configure the LCD to generate interrupts

21.6 LCD registers

The peripheral registers have to be accessed by words (32-bit).

21.6.1 LCD control register (LCD_CR)

Address offset: 0x00

Reset value: 0x0000 0000

31	30	29	28	27	26	25	24	23	22	21	20	19	18	17	16
Res.	Res.	Res.	Res.	Res.	Res.	Res.	Res.	Res.	Res.	Res.	Res.	Res.	Res.	Res.	Res.

15	14	13	12	11	10	9	8	7	6	5	4	3	2	1	0
Res.	Res.	Res.	Res.	Res.	Res.	Res.	BUFEN	MUX_SEG	BIAS[1:0]		DUTY[2:0]			VSEL	LCDEN
							rw	rw	rw	rw	rw	rw	rw	rw	rw

Bits 31:9 Reserved, must be kept at reset value

Bit 8 **BUFEN**: Voltage output buffer enable

This bit is used to enable/disable the voltage output buffer for higher driving capability.

0: Output buffer disabled
1: Output buffer enabled

Bit 7 **MUX_SEG**: Mux segment enable

This bit is used to enable SEG pin remapping. Four SEG pins can be multiplexed with SEG[31:28]. See *Section 21.3.7*.

0: SEG pin multiplexing disabled
1: SEG[31:28] are multiplexed with SEG[43:40]

Bits 6:5 **BIAS[1:0]**: Bias selector

These bits determine the bias used. Value 11 is forbidden.

00: Bias 1/4
01: Bias 1/2
10: Bias 1/3
11: Reserved

Bits 4:2 **DUTY[2:0]**: Duty selection

These bits determine the duty cycle. Values 101, 110 and 111 are forbidden.

000: Static duty
001: 1/2 duty
010: 1/3 duty
011: 1/4 duty
100: 1/8 duty
101: Reserved
110: Reserved
111: Reserved

Bit 1 **VSEL**: Voltage source selection

The VSEL bit determines the voltage source for the LCD.

0: Internal source (voltage step-up converter)
1: External source (VLCD pin)

Bit 0 **LCDEN**: LCD controller enable

This bit is set by software to enable the LCD Controller/Driver. It is cleared by software to turn off the LCD at the beginning of the next frame. When the LCD is disabled all COM and SEG pins are driven to V_{SS}.

0: LCD Controller disabled
1: LCD Controller enabled

Note: The VSEL, MUX_SEG, BIAS, DUTY and BUFEN bits are write-protected when the LCD is enabled (ENS bit in LCD_SR to 1).

21.6.2 LCD frame control register (LCD_FCR)

Address offset: 0x04

Reset value: 0x0000 0000

31	30	29	28	27	26	25	24	23	22	21	20	19	18	17	16
Res.	Res.	Res.	Res.	Res.	Res.	PS[3:0]				DIV[3:0]				BLINK[1:0]	
						rw	rw	rw	rw	rw	rw	rw	rw	rw	rw

15	14	13	12	11	10	9	8	7	6	5	4	3	2	1	0
BLINKF[2:0]			CC[2:0]			DEAD[2:0]			PON[2:0]			UDDIE	Res.	SOFIE	HD
rw	rw	rw	rw	rw	rw	rw	rw	rw	rw	rw	rw	rw		rw	rw

Bits 31:26 Reserved, must be kept at reset value

Bits 25:22 **PS[3:0]**: PS 16-bit prescaler

These bits are written by software to define the division factor of the PS 16-bit prescaler. ck_ps = LCDCLK/(2). See *Section 21.3.2*.

0000: ck_ps = LCDCLK
0001: ck_ps = LCDCLK/2
0002: ck_ps = LCDCLK/4
...
1111:ck_ps = LCDCLK/32768

Bits 21:18 **DIV[3:0]**: DIV clock divider

These bits are written by software to define the division factor of the DIV divider. See *Section 21.3.2*.

0000: ck_div = ck_ps/16
0001: ck_div = ck_ps/17
0002: ck_div = ck_ps/18
...
1111:ck_div = ck_ps/31

Bits 17:16 **BLINK[1:0]**: Blink mode selection

00: Blink disabled
01: Blink enabled on SEG[0], COM[0] (1 pixel)
10: Blink enabled on SEG[0], all COMs (up to 8 pixels depending on the programmed duty)
11: Blink enabled on all SEGs and all COMs (all pixels)

Bits 15:13 **BLINKF[2:0]**: Blink frequency selection

000: $f_{LCD}/8$
001: $f_{LCD}/16$
010: $f_{LCD}/32$
011: $f_{LCD}/64$
100: $f_{LCD}/128$
101: $f_{LCD}/256$
110: $f_{LCD}/512$
111: $f_{LCD}/1024$

Bits 12:10 **CC[2:0]**: Contrast control

These bits specify one of the V_{LCD} maximum voltages (independent of V_{DD}). It ranges from 2.60 V to 3.51V.

000: V_{LCD0}
001: V_{LCD1}
010: V_{LCD2}
011: V_{LCD3}
100: V_{LCD4}
101: V_{LCD5}
110: V_{LCD6}
111: V_{LCD7}

Refer to the product datasheet for the V_{LCDx} values.

Bits 9:7 **DEAD[2:0]**: Dead time duration

These bits are written by software to configure the length of the dead time between frames. During the dead time the COM and SEG voltage levels are held at 0 V to reduce the contrast without modifying the frame rate.

000: No dead time
001: 1 phase period dead time
010: 2 phase period dead time
.....
111: 7 phase period dead time

Bits 6:4 **PON[2:0]**: Pulse ON duration

These bits are written by software to define the pulse duration in terms of ck_ps pulses. A short pulse will lead to lower power consumption, but displays with high internal resistance may need a longer pulse to achieve satisfactory contrast.

Note that the pulse will never be longer than one half prescaled LCD clock period.

000: 0
001: 1/ck_ps
010: 2/ck_ps
011: 3/ck_ps
100: 4/ck_ps
101: 5/ck_ps
110: 6/ck_ps
111: 7/ck_ps

PON duration example with LCDCLK = 32.768 kHz and PS=0x03:

000: 0 µs
001: 244 µs
010: 488 µs
011: 782 µs
100: 976 µs
101: 1.22 ms
110: 1.46 ms
111: 1.71 ms

Bit 3 **UDDIE**: Update display done interrupt enable

This bit is set and cleared by software.

0: LCD Update Display Done interrupt disabled
1: LCD Update Display Done interrupt enabled

Bit 2 Reserved, must be kept at reset value

Bit 1 **SOFIE**: Start of frame interrupt enable

This bit is set and cleared by software.

0: LCD Start of Frame interrupt disabled
1: LCD Start of Frame interrupt enabled

Bit 0 **HD**: High drive enable

This bit is written by software to enable a low resistance divider. Displays with high internal resistance may need a longer drive time to achieve satisfactory contrast. This bit is useful in this case if some additional power consumption can be tolerated.

0: Permanent high drive disabled
1: Permanent high drive enabled. When HD=1, then the PON bits have to be programmed to 001.

Note: The data in this register can be updated any time, however the new values are applied only at the beginning of the next frame (except for UDDIE, SOFIE that affect the device behavior immediately).

The new value of CC[2:0] bits is also applied immediately but its effect on device is delayed at the beginning of next frame by the voltage generator.

Reading this register obtains the last value written in the register and not the configuration used to display the current frame.

Note: When BUFEN bit is set in the LCD_CR register, low resistor divider network is automatically disabled whatever the HD or PON[2:0] bits configuration.

21.6.3 LCD status register (LCD_SR)

Address offset: 0x08

Reset value: 0x0000 0020

31	30	29	28	27	26	25	24	23	22	21	20	19	18	17	16
Res.	Res.	Res.	Res.	Res.	Res.	Res.	Res.	Res.	Res.	Res.	Res.	Res.	Res.	Res.	Res.

15	14	13	12	11	10	9	8	7	6	5	4	3	2	1	0
Res.	Res.	Res.	Res.	Res.	Res.	Res.	Res.	Res.	Res.	FCRSF	RDY	UDD	UDR	SOF	ENS
										r	r	r	rs	r	r

Bits 31:6 Reserved, must be kept at reset value

Bit 5 **FCRSF**: LCD Frame Control Register Synchronization flag

This bit is set by hardware each time the LCD_FCR register is updated in the LCDCLK domain. It is cleared by hardware when writing to the LCD_FCR register.

0: LCD Frame Control Register not yet synchronized

1: LCD Frame Control Register synchronized

Bit 4 **RDY**: Ready flag

This bit is set and cleared by hardware. It indicates the status of the step-up converter.

0: Not ready

1: Step-up converter is enabled and ready to provide the correct voltage.

Bit 3 **UDD**: Update Display Done

This bit is set by hardware. It is cleared by writing 1 to the UDDC bit in the LCD_CLR register. The bit set has priority over the clear.

0: No event

1: Update Display Request done. A UDD interrupt is generated if the UDDIE bit in the LCD_FCR register is set.

Note: If the device is in Stop mode (PCLK not provided) UDD will not generate an interrupt even if UDDIE = 1.

If the display is not enabled the UDD interrupt will never occur.

Bit 2 **UDR**: Update display request

Each time software modifies the LCD_RAM it must set the UDR bit to transfer the updated data to the second level buffer. The UDR bit stays set until the end of the update and during this time the LCD_RAM is write protected.

0: No effect

1: Update Display request

Note: When the display is disabled, the update is performed for all LCD_DISPLAY locations. When the display is enabled, the update is performed only for locations for which commons are active (depending on DUTY). For example if DUTY = 1/2, only the LCD_DISPLAY of COM0 and COM1 will be updated.

Note: Writing 0 on this bit or writing 1 when it is already 1 has no effect. This bit can be cleared by hardware only. It can be cleared only when LCDEN = 1

Bit 1 **SOF**: Start of frame flag

This bit is set by hardware at the beginning of a new frame, at the same time as the display data is updated. It is cleared by writing a 1 to the SOFC bit in the LCD_CLR register. The bit clear has priority over the set.

0: No event

1: Start of Frame event occurred. An LCD Start of Frame Interrupt is generated if the SOFIE bit is set.

ENS: LCD enabled status

Bit 0 This bit is set and cleared by hardware. It indicates the LCD controller status.

0: LCD Controller disabled.

1: LCD Controller enabled

Note: The ENS bit is set immediately when the LCDEN bit in the LCD_CR goes from 0 to 1. On deactivation it reflects the real status of LCD so it becomes 0 at the end of the last displayed frame.

21.6.4 LCD clear register (LCD_CLR)

Address offset: 0x0C

Reset value: 0x0000 0000

31	30	29	28	27	26	25	24	23	22	21	20	19	18	17	16
Res.	Res.	Res.	Res.	Res.	Res.	Res.	Res.	Res.	Res.	Res.	Res.	Res.	Res.	Res.	Res.

15	14	13	12	11	10	9	8	7	6	5	4	3	2	1	0
Res.	Res.	Res.	Res.	Res.	Res.	Res.	Res.	Res.	Res.	Res.	Res.	UDDC	Res.	SOFC	Res.
												w		w	

Bits 31:4 Reserved, must be kept at reset value

Bit 3 **UDDC:** Update display done clear

This bit is written by software to clear the UDD flag in the LCD_SR register.

0: No effect

1: Clear UDD flag

Bit 2 Reserved, must be kept at reset value

Bit 1 **SOFC:** Start of frame flag clear
This bit is written by software to clear the SOF flag in the LCD_SR register.
0: No effect
1: Clear SOF flag

Bit 0 Reserved, must be kept at reset value

21.6.5 LCD display memory (LCD_RAM)

Address offset: 0x14 to 0x50

Reset value: 0x0000 0000

31	30	29	28	27	26	25	24	23	22	21	20	19	18	17	16
SEGMENT_DATA[31:16]															
rw	rw	rw	rw	rw	rw	rw	rw	rw	rw	rw	rw	rw	rw	rw	rw

15	14	13	12	11	10	9	8	7	6	5	4	3	2	1	0
SEGMENT_DATA[15:0]															
rw	rw	rw	rw	rw	rw	rw	rw	rw	rw	rw	rw	rw	rw	rw	rw

Bits 31:0 SEGMENT_DATA[31:0]
Each bit corresponds to one pixel of the LCD display.
0: Pixel inactive
1: Pixel active

21.6.6 LCD register map

The following table summarizes the LCD registers.

Table 96. LCD register map and reset values

Offset	Register	31	30	29	28	27	26	25	24	23	22	21	20	19	18	17	16	15	14	13	12	11	10	9	8	7	6	5	4	3	2	1	0
0x00	LCD_CR	Res.	Res.	Res.	Res.	Res.	Res.	Res.	Res.	Res.	Res.	Res.	Res.	Res.	Res.	Res.	Res.	Res.	Res.	Res.	Res.	Res.	Res.	Res.	BUFEN	MUX_SEG	BIAS[1:0]		DUTY [2:0]			VSEL	LCDEN
	Reset value																									0	0	0	0	0	0	0	0
0x04	LCD_FCR	Res.	Res.	Res.	Res.	Res.	Res.	PS[3:0]				DIV[3:0]				BLINK[1:0]		BLINKF[2:0]			CC [2:0]			DEAD [2:0]			PON [2:0]			UDDIE	Res.	SOFIE	HD
	Reset value							0	0	0	0	0	0	0	0	0	0	0	0	0	0	0	0	0	0	0	0	0	0	0		0	0
0x08	LCD_SR	Res.	Res.	Res.	Res.	Res.	Res.	Res.	Res.	Res.	Res.	Res.	Res.	Res.	Res.	Res.	Res.	Res.	Res.	Res.	Res.	Res.	Res.	Res.	Res.	Res.	Res.	FCRSF	RDY	UDD	UDR	SOF	ENS
	Reset value																											1	0	0	0	0	0

Table 96. LCD register map and reset values (continued)

Offset	Register	31	30	29	28	27	26	25	24	23	22	21	20	19	18	17	16	15	14	13	12	11	10	9	8	7	6	5	4	3	2	1	0
0x0C	LCD_CLR	Res.	Res.	Res.	Res.	Res.	Res.	Res.	Res.	Res.	Res.	Res.	Res.	Res.	Res.	Res.	Res.	Res.	Res.	Res.	Res.	Res.	Res.	Res.	Res.	Res.	Res.	Res.	Res.	UDDC	Res.	SOFC	Res.
	Reset value																													0		0	
0x14	LCD_RAM (COM0)	S31	S30	S29	S28	S27	S26	S25	S24	S23	S22	S21	S20	S19	S18	S17	S16	S15	S14	S13	S12	S11	S10	S09	S08	S07	S06	S05	S04	S03	S02	S01	S00
		0	0	0	0	0	0	0	0	0	0	0	0	0	0	0	0	0	0	0	0	0	0	0	0	0	0	0	0	0	0	0	0
0x18		Res.	Res.	Res.	Res.	Res.	Res.	Res.	Res.	Res.	Res.	Res.	Res.	Res.	Res.	Res.	Res.	Res.	Res.	Res.	Res.	S43	S42	S41	S40	S39	S38	S37	S36	S35	S34	S33	S32
																						0	0	0	0	0	0	0	0	0	0	0	0
0x1C	LCD_RAM (COM1)	S31	S30	S29	S28	S27	S26	S25	S24	S23	S22	S21	S20	S19	S18	S17	S16	S15	S14	S13	S12	S11	S10	S09	S08	S07	S06	S05	S04	S03	S02	S01	S00
		0	0	0	0	0	0	0	0	0	0	0	0	0	0	0	0	0	0	0	0	0	0	0	0	0	0	0	0	0	0	0	0
0x20		Res.	Res.	Res.	Res.	Res.	Res.	Res.	Res.	Res.	Res.	Res.	Res.	Res.	Res.	Res.	Res.	Res.	Res.	Res.	Res.	S43	S42	S41	S40	S39	S38	S37	S36	S35	S34	S33	S32
																						0	0	0	0	0	0	0	0	0	0	0	0
0x24	LCD_RAM (COM2)	S31	S30	S29	S28	S27	S26	S25	S24	S23	S22	S21	S20	S19	S18	S17	S16	S15	S14	S13	S12	S11	S10	S09	S08	S07	S06	S05	S04	S03	S02	S01	S00
		0	0	0	0	0	0	0	0	0	0	0	0	0	0	0	0	0	0	0	0	0	0	0	0	0	0	0	0	0	0	0	0
0x28		Res.	Res.	Res.	Res.	Res.	Res.	Res.	Res.	Res.	Res.	Res.	Res.	Res.	Res.	Res.	Res.	Res.	Res.	Res.	Res.	S43	S42	S41	S40	S39	S38	S37	S36	S35	S34	S33	S32
																						0	0	0	0	0	0	0	0	0	0	0	0
0x2C	LCD_RAM (COM3)	S31	S30	S29	S28	S27	S26	S25	S24	S23	S22	S21	S20	S19	S18	S17	S16	S15	S14	S13	S12	S11	S10	S09	S08	S07	S06	S05	S04	S03	S02	S01	S00
		0	0	0	0	0	0	0	0	0	0	0	0	0	0	0	0	0	0	0	0	0	0	0	0	0	0	0	0	0	0	0	0
0x30		Res.	Res.	Res.	Res.	Res.	Res.	Res.	Res.	Res.	Res.	Res.	Res.	Res.	Res.	Res.	Res.	Res.	Res.	Res.	Res.	S43	S42	S41	S40	S39	S38	S37	S36	S35	S34	S33	S32
																						0	0	0	0	0	0	0	0	0	0	0	0
0x34	LCD_RAM (COM4)	S31	S30	S29	S28	S27	S26	S25	S24	S23	S22	S21	S20	S19	S18	S17	S16	S15	S14	S13	S12	S11	S10	S09	S08	S07	S06	S05	S04	S03	S02	S01	S00
		0	0	0	0	0	0	0	0	0	0	0	0	0	0	0	0	0	0	0	0	0	0	0	0	0	0	0	0	0	0	0	0
0x38		Res.	Res.	Res.	Res.	Res.	Res.	Res.	Res.	Res.	Res.	Res.	Res.	Res.	Res.	Res.	Res.	Res.	Res.	Res.	Res.	Res.	Res.	Res.	Res.	S39	S38	S37	S36	S35	S34	S33	S32
																										0	0	0	0	0	0	0	0
0x3C	LCD_RAM (COM5)	S31	S30	S29	S28	S27	S26	S25	S24	S23	S22	S21	S20	S19	S18	S17	S16	S15	S14	S13	S12	S11	S10	S09	S08	S07	S06	S05	S04	S03	S02	S01	S00
		0	0	0	0	0	0	0	0	0	0	0	0	0	0	0	0	0	0	0	0	0	0	0	0	0	0	0	0	0	0	0	0
0x40		Res.	Res.	Res.	Res.	Res.	Res.	Res.	Res.	Res.	Res.	Res.	Res.	Res.	Res.	Res.	Res.	Res.	Res.	Res.	Res.	Res.	Res.	Res.	Res.	S39	S38	S37	S36	S35	S34	S33	S32
		0	0	0	0	0	0	0	0	0	0	0	0	0	0	0	0	0	0	0	0	0	0	0	0	0	0	0	0	0	0	0	0

Table 96. LCD register map and reset values (continued)

Offset	Register	31	30	29	28	27	26	25	24	23	22	21	20	19	18	17	16	15	14	13	12	11	10	9	8	7	6	5	4	3	2	1	0
0x44	LCD_RAM (COM6)	S31	S30	S29	S28	S27	S26	S25	S24	S23	S22	S21	S20	S19	S18	S17	S16	S15	S14	S13	S12	S11	S10	S09	S08	S07	S06	S05	S04	S03	S02	S01	S00
		0	0	0	0	0	0	0	0	0	0	0	0	0	0	0	0	0	0	0	0	0	0	0	0	0	0	0	0	0	0	0	0
0x48		Res.	Res.	Res.	Res.	Res.	Res.	Res.	Res.	Res.	Res.	Res.	Res.	Res.	Res.	Res.	Res.	Res.	Res.	Res.	Res.	Res.	Res.	Res.	Res.	S39	S38	S37	S36	S35	S34	S33	S32
		0	0	0	0	0	0	0	0	0	0	0	0	0	0	0	0	0	0	0	0	0	0	0	0	0	0	0	0	0	0	0	0
0x4C	LCD_RAM (COM7)	S31	S30	S29	S28	S27	S26	S25	S24	S23	S22	S21	S20	S19	S18	S17	S16	S15	S14	S13	S12	S11	S10	S09	S08	S07	S06	S05	S04	S03	S02	S01	S00
		0	0	0	0	0	0	0	0	0	0	0	0	0	0	0	0	0	0	0	0	0	0	0	0	0	0	0	0	0	0	0	0
0x50		Res.	Res.	Res.	Res.	Res.	Res.	Res.	Res.	Res.	Res.	Res.	Res.	Res.	Res.	Res.	Res.	Res.	Res.	Res.	Res.	Res.	Res.	Res.	Res.	S39	S38	S37	S36	S35	S34	S33	S32
		0	0	0	0	0	0	0	0	0	0	0	0	0	0	0	0	0	0	0	0	0	0	0	0	0	0	0	0	0	0	0	0

Refer to *Section 2.2.2 on page 62* for the *Register boundary addresses* table.

22 Touch sensing controller (TSC)

22.1 Introduction

The touch sensing controller provides a simple solution for adding capacitive sensing functionality to any application. Capacitive sensing technology is able to detect finger presence near an electrode which is protected from direct touch by a dielectric (for example glass, plastic). The capacitive variation introduced by the finger (or any conductive object) is measured using a proven implementation based on a surface charge transfer acquisition principle.

The touch sensing controller is fully supported by the STMTouch touch sensing firmware library which is free to use and allows touch sensing functionality to be implemented reliably in the end application.

22.2 TSC main features

The touch sensing controller has the following main features:

- Proven and robust surface charge transfer acquisition principle
- Supports up to 21 capacitive sensing channels
- Up to 7 capacitive sensing channels can be acquired in parallel offering a very good response time
- Spread spectrum feature to improve system robustness in noisy environments
- full hardware management of the charge transfer acquisition sequence
- Programmable charge transfer frequency
- Programmable sampling capacitor I/O pin
- Programmable channel I/O pin
- Programmable max count value to avoid long acquisition when a channel is faulty
- Dedicated end of acquisition and max count error flags with interrupt capability
- One sampling capacitor for up to 3 capacitive sensing channels to reduce the system components
- Compatible with proximity, touchkey, linear and rotary touch sensor implementation
- Designed to operate with STMTouch touch sensing firmware library

Note: The number of capacitive sensing channels is dependent on the size of the packages and subject to IO availability.

22.3 TSC functional description

22.3.1 TSC block diagram

The block diagram of the touch sensing controller is shown in *Figure 140: TSC block diagram*.

Figure 140. TSC block diagram

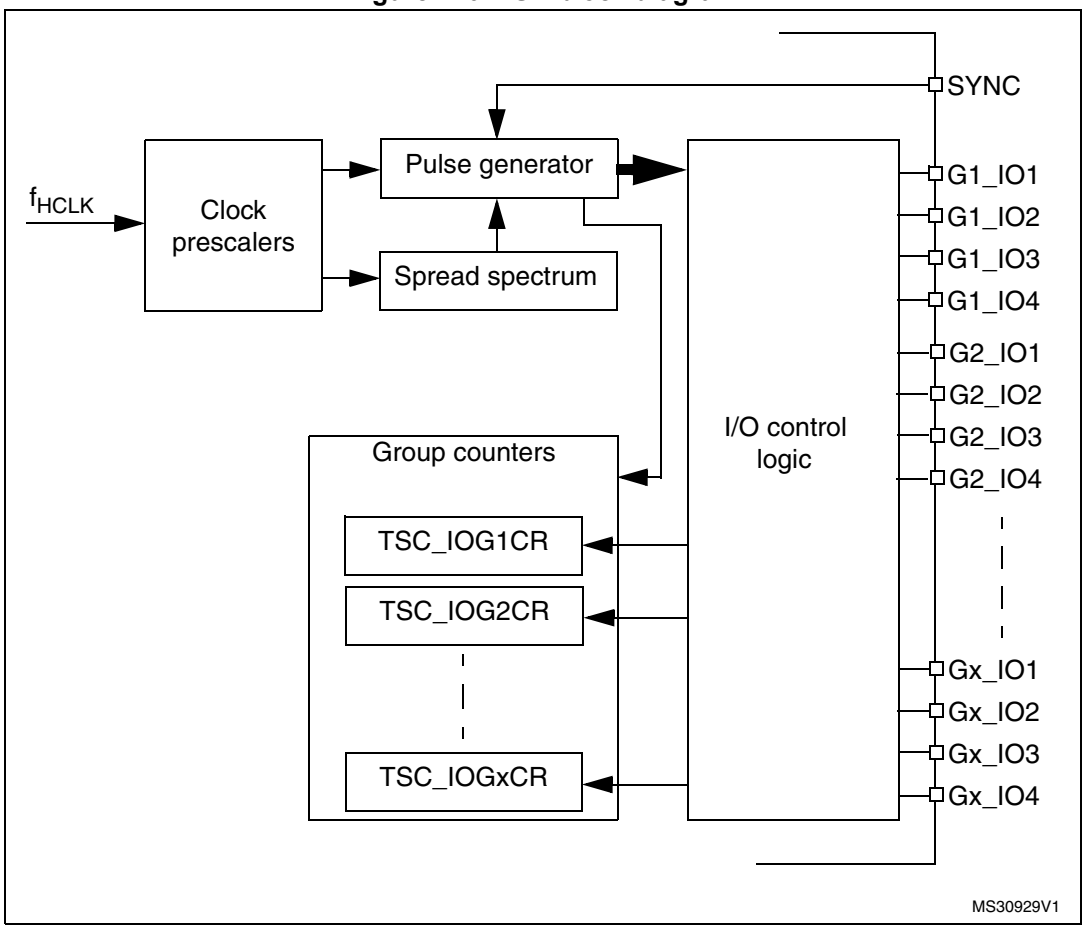

22.3.2 Surface charge transfer acquisition overview

The surface charge transfer acquisition is a proven, robust and efficient way to measure a capacitance. It uses a minimum number of external components to operate with a single ended electrode type. This acquisition is designed around an analog I/O group which is composed of four GPIOs (see *Figure 141*). Several analog I/O groups are available to allow the acquisition of several capacitive sensing channels simultaneously and to support a larger number of capacitive sensing channels. Within a same analog I/O group, the acquisition of the capacitive sensing channels is sequential.

One of the GPIOs is dedicated to the sampling capacitor C_S. Only one sampling capacitor I/O per analog I/O group must be enabled at a time.

The remaining GPIOs are dedicated to the electrodes and are commonly called channels. For some specific needs (such as proximity detection), it is possible to simultaneously enable more than one channel per analog I/O group.

Figure 141. Surface charge transfer analog I/O group structure

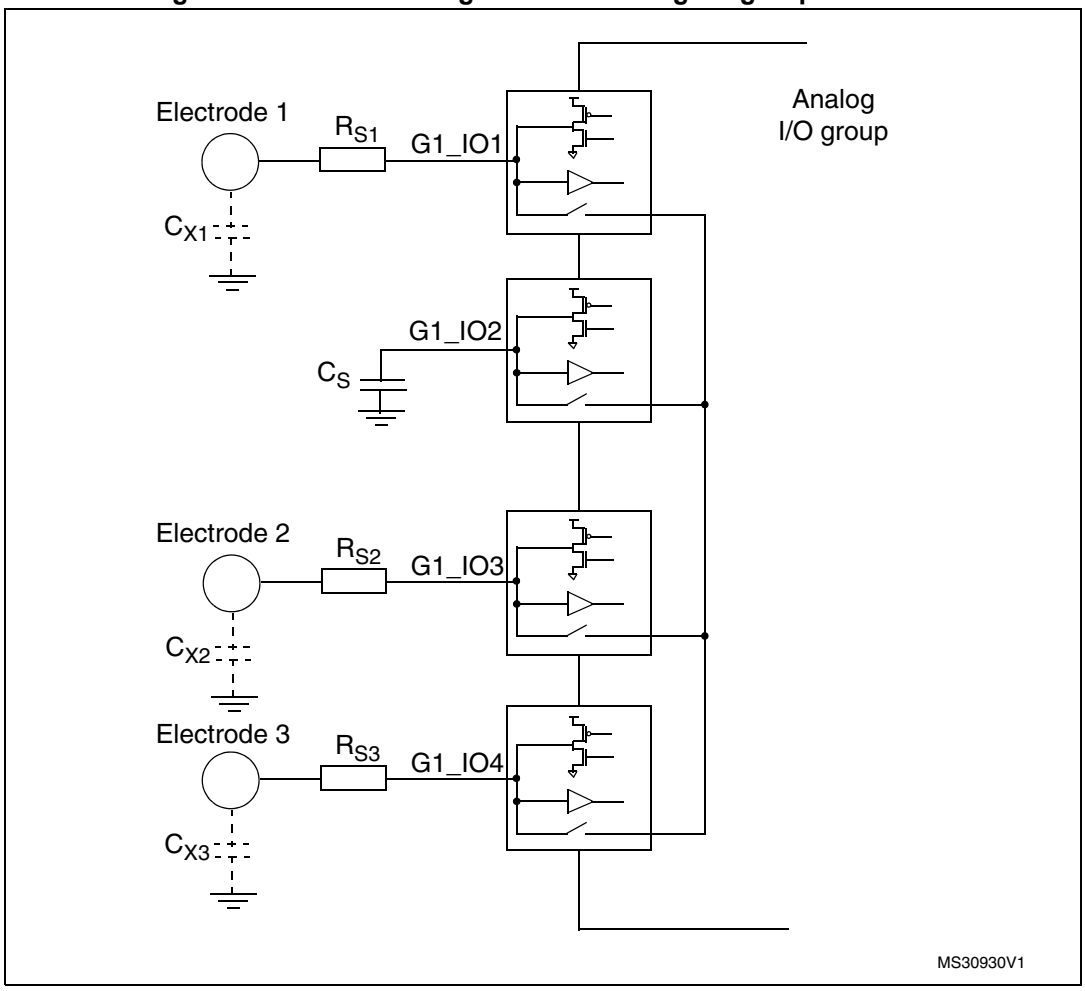

Note: Gx_IOy where x is the analog I/O group number and y the GPIO number within the selected group.

The surface charge transfer acquisition principle consists of charging an electrode capacitance (C_X) and transferring a part of the accumulated charge into a sampling capacitor (C_S). This sequence is repeated until the voltage across C_S reaches a given threshold (V_{IH} in our case). The number of charge transfers required to reach the threshold is a direct representation of the size of the electrode capacitance.

The *Table 97* details the charge transfer acquisition sequence of the capacitive sensing channel 1. States 3 to 7 are repeated until the voltage across C_S reaches the given threshold. The same sequence applies to the acquisition of the other channels. The electrode serial resistor R_S improves the ESD immunity of the solution.

Table 97. Acquisition sequence summary

State	G1_IO1 (electrode)	G1_IO2 (sampling)	G1_IO3 (electrode)	G1_IO4 (electrode)	State description
#1	Input floating with analog switch closed	Output open-drain low with analog switch closed	Input floating with analog switch closed		Discharge all C_X and C_S
#2	Input floating				Dead time
#3	Output push-pull high	Input floating			Charge C_{X1}
#4	Input floating				Dead time
#5	Input floating with analog switch closed		Input floating		Charge transfer from C_{X1} to C_S
#6	Input floating				Dead time
#7	Input floating				Measure C_S voltage

The voltage variation over the time on the sampling capacitor C_S is detailed below:

Figure 142. Sampling capacitor voltage variation

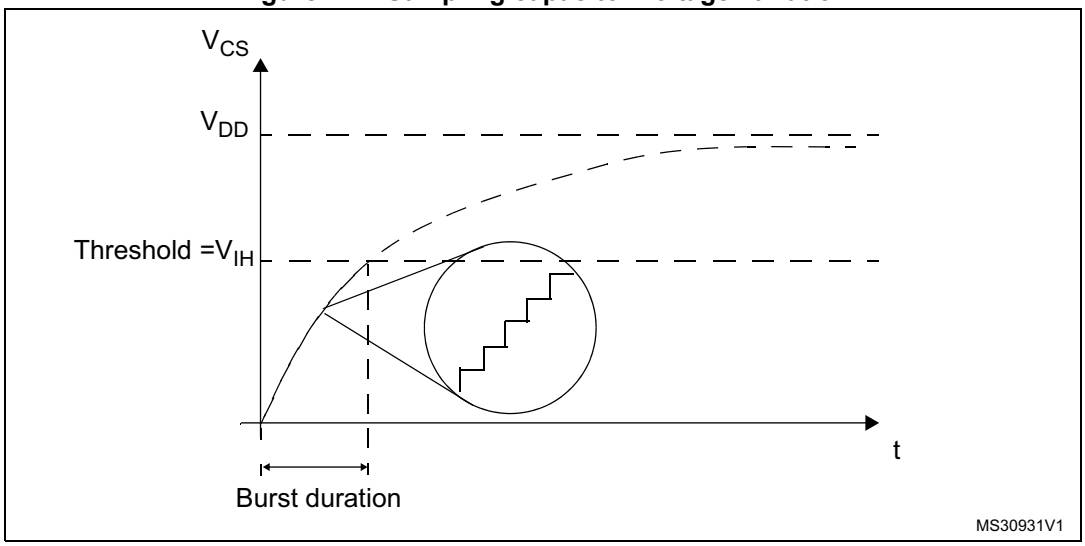

22.3.3 Reset and clocks

The TSC clock source is the AHB clock (HCLK). Two programmable prescalers are used to generate the pulse generator and the spread spectrum internal clocks:

- The pulse generator clock (PGCLK) is defined using the PGPSC[2:0] bits of the TSC_CR register
- The spread spectrum clock (SSCLK) is defined using the SSPSC bit of the TSC_CR register

The Reset and Clock Controller (RCC) provides dedicated bits to enable the touch sensing controller clock and to reset this peripheral. For more information, please refer to *Section 6: Reset and clock control (RCC)*.

22.3.4 Charge transfer acquisition sequence

An example of a charge transfer acquisition sequence is detailed in *Figure 143*.

Figure 143. Charge transfer acquisition sequence

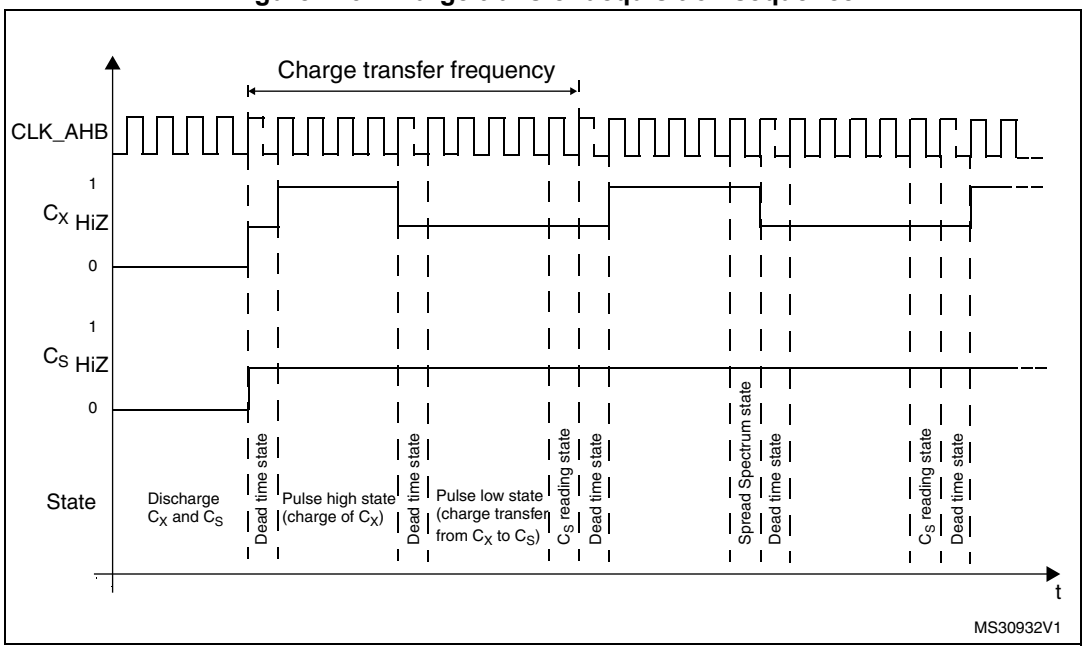

For higher flexibility, the charge transfer frequency is fully configurable. Both the pulse high state (charge of C_X) and the pulse low state (transfer of charge from C_X to C_S) duration can be defined using the CTPH[3:0] and CTPL[3:0] bits in the TSC_CR register. The standard range for the pulse high and low states duration is 500 ns to 2 µs. To ensure a correct measurement of the electrode capacitance, the pulse high state duration must be set to ensure that C_X is always fully charged.

A dead time where both the sampling capacitor I/O and the channel I/O are in input floating state is inserted between the pulse high and low states to ensure an optimum charge transfer acquisition sequence. This state duration is 1 periods of HCLK.

At the end of the pulse high state and if the spread spectrum feature is enabled, a variable number of periods of the SSCLK clock are added.

The reading of the sampling capacitor I/O, to determine if the voltage across C_S has reached the given threshold, is performed at the end of the pulse low state and its duration is one period of HCLK.

Note: The following TSC control register configurations are forbidden:

- *bits PGPSC are set to '0' and bits CTPL are set to '0'*
- *bits PGPSC are set to '0' and bits CTPL are set to '1'*
- *bits PGPSC are set to '1' and bits CTPL are set to '0'*

22.3.5 Spread spectrum feature

The spread spectrum feature allows to generate a variation of the charge transfer frequency. This is done to improve the robustness of the charge transfer acquisition in noisy environments and also to reduce the induced emission. The maximum frequency variation is in the range of 10% to 50% of the nominal charge transfer period. For instance, for a nominal charge transfer frequency of 250 kHz (4 µs), the typical spread spectrum deviation is 10% (400 ns) which leads to a minimum charge transfer frequency of ~227 kHz.

In practice, the spread spectrum consists of adding a variable number of SSCLK periods to the pulse high state using the principle shown below:

Figure 144. Spread spectrum variation principle

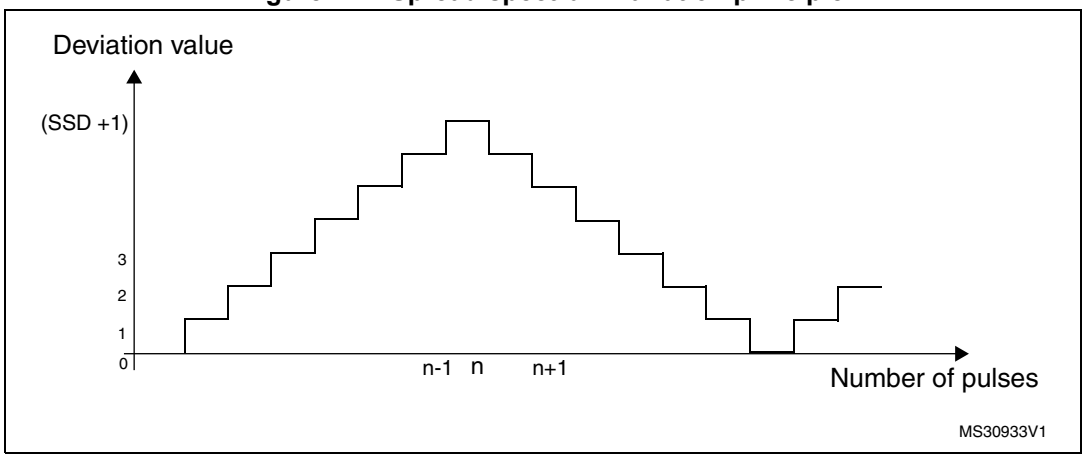

The table below details the maximum frequency deviation with different HCLK settings:

Table 98. Spread spectrum deviation versus AHB clock frequency

f_{HCLK}	Spread spectrum step	Maximum spread spectrum deviation
24 MHz	41.6 ns	10666.6 ns
48 MHz	20.8 ns	5333.3 ns
80MHz	12.5 ns	3205.1 ns

The spread spectrum feature can be disabled/enabled using the SSE bit in the TSC_CR register. The frequency deviation is also configurable to accommodate the device HCLK clock frequency and the selected charge transfer frequency through the SSPSC and SSD[6:0] bits in the TSC_CR register.

22.3.6 Max count error

The max count error prevents long acquisition times resulting from a faulty capacitive sensing channel. It consists of specifying a maximum count value for the analog I/O group counters. This maximum count value is specified using the MCV[2:0] bits in the TSC_CR register. As soon as an acquisition group counter reaches this maximum value, the ongoing acquisition is stopped and the end of acquisition (EOAF bit) and max count error (MCEF bit) flags are both set. An interrupt can also be generated if the corresponding end of acquisition (EOAIE bit) or/and max count error (MCEIE bit) interrupt enable bits are set.

22.3.7 Sampling capacitor I/O and channel I/O mode selection

To allow the GPIOs to be controlled by the touch sensing controller, the corresponding alternate function must be enabled through the standard GPIO registers and the GPIOxAFR registers.

The GPIOs modes controlled by the TSC are defined using the TSC_IOSCR and TSC_IOCCR register.

When there is no ongoing acquisition, all the I/Os controlled by the touch sensing controller are in default state. While an acquisition is ongoing, only unused I/Os (neither defined as sampling capacitor I/O nor as channel I/O) are in default state. The IODEF bit in the TSC_CR register defines the configuration of the I/Os which are in default state. The table below summarizes the configuration of the I/O depending on its mode.

Table 99. I/O state depending on its mode and IODEF bit value

IODEF bit	Acquisition status	Unused I/O mode	Electrode I/O mode	Sampling capacitor I/O mode
0 (output push-pull low)	No	Output push-pull low	Output push-pull low	Output push-pull low
0 (output push-pull low)	ongoing	Output push-pull low	-	-
1 (input floating)	No	Input floating	Input floating	Input floating
1 (input floating)	ongoing	Input floating	-	-

Unused I/O mode

An unused I/O corresponds to a GPIO controlled by the TSC peripheral but not defined as an electrode I/O nor as a sampling capacitor I/O.

Sampling capacitor I/O mode

To allow the control of the sampling capacitor I/O by the TSC peripheral, the corresponding GPIO must be first set to alternate output open drain mode and then the corresponding Gx_IOy bit in the TSC_IOSCR register must be set.

Only one sampling capacitor per analog I/O group must be enabled at a time.

Channel I/O mode

To allow the control of the channel I/O by the TSC peripheral, the corresponding GPIO must be first set to alternate output push-pull mode and the corresponding Gx_IOy bit in the TSC_IOCCR register must be set.

For proximity detection where a higher equivalent electrode surface is required or to speed-up the acquisition process, it is possible to enable and simultaneously acquire several channels belonging to the same analog I/O group.

Note: During the acquisition phase and even if the TSC peripheral alternate function is not enabled, as soon as the TSC_IOSCR or TSC_IOCCR bit is set, the corresponding GPIO analog switch is automatically controlled by the touch sensing controller.

22.3.8 Acquisition mode

The touch sensing controller offers two acquisition modes:

- Normal acquisition mode: the acquisition starts as soon as the START bit in the TSC_CR register is set.
- Synchronized acquisition mode: the acquisition is enabled by setting the START bit in the TSC_CR register but only starts upon the detection of a falling edge or a rising edge and high level on the SYNC input pin. This mode is useful for synchronizing the capacitive sensing channels acquisition with an external signal without additional CPU load.

The GxE bits in the TSC_IOGCSR registers specify which analog I/O groups are enabled (corresponding counter is counting). The C_S voltage of a disabled analog I/O group is not monitored and this group does not participate in the triggering of the end of acquisition flag. However, if the disabled analog I/O group contains some channels, they will be pulsed.

When the C_S voltage of an enabled analog I/O group reaches the given threshold, the corresponding GxS bit of the TSC_IOGCSR register is set. When the acquisition of all enabled analog I/O groups is complete (all GxS bits of all enabled analog I/O groups are set), the EOAF flag in the TSC_ISR register is set. An interrupt request is generated if the EOAIE bit in the TSC_IER register is set.

In the case that a max count error is detected, the ongoing acquisition is stopped and both the EOAF and MCEF flags in the TSC_ISR register are set. Interrupt requests can be generated for both events if the corresponding bits (EOAIE and MCEIE bits of the TSCIER register) are set. Note that when the max count error is detected the remaining GxS bits in the enabled analog I/O groups are not set.

To clear the interrupt flags, the corresponding EOAIC and MCEIC bits in the TSC_ICR register must be set.

The analog I/O group counters are cleared when a new acquisition is started. They are updated with the number of charge transfer cycles generated on the corresponding channel(s) upon the completion of the acquisition.

22.3.9 I/O hysteresis and analog switch control

In order to offer a higher flexibility, the touch sensing controller also allows to take the control of the Schmitt trigger hysteresis and analog switch of each Gx_IOy. This control is available whatever the I/O control mode is (controlled by standard GPIO registers or other peripherals) assuming that the touch sensing controller is enabled. This may be useful to perform a different acquisition sequence or for other purposes.

In order to improve the system immunity, the Schmitt trigger hysteresis of the GPIOs controlled by the TSC must be disabled by resetting the corresponding Gx_IOy bit in the TSC_IOHCR register.

22.4 TSC low-power modes

Table 100. Effect of low-power modes on TSC

Mode	Description
Sleep	No effect. Peripheral interrupts cause the device to exit Sleep mode.
Low power run	No effect.
Low power sleep	No effect. Peripheral interrupts cause the device to exit Low-power sleep mode.
Stop 0 / Stop 1	Peripheral registers content is kept.
Stop 2	
Standby	Powered-down. The peripheral must be reinitialized after exiting Standby or Shutdown mode.
Shutdown	

22.5 TSC interrupts

Table 101. Interrupt control bits

Interrupt event	Enable control bit	Event flag	Clear flag bit	Exit the Sleep mode	Exit the Stop mode	Exit the Standby mode
End of acquisition	EOAIE	EOAIF	EOAIC	yes	no	no
Max count error	MCEIE	MCEIF	MCEIC	yes	no	no

22.6 TSC registers

Refer to *Section 1.1 on page 55* of the reference manual for a list of abbreviations used in register descriptions.

The peripheral registers can be accessed by words (32-bit).

22.6.1 TSC control register (TSC_CR)

Address offset: 0x00

Reset value: 0x0000 0000

31	30	29	28	27	26	25	24	23	22	21	20	19	18	17	16
CTPH[3:0]				CTPL[3:0]				SSD[6:0]							SSE
rw	rw	rw	rw	rw	rw	rw	rw	rw	rw	rw	rw	rw	rw	rw	rw
15	14	13	12	11	10	9	8	7	6	5	4	3	2	1	0
SSPSC	PGPSC[2:0]			Res.	Res.	Res.	Res.	MCV[2:0]			IODEF	SYNC POL	AM	START	TSCE
rw	rw	rw	rw					rw	rw	rw	rw	rw	rw	rw	rw

Bits 31:28 **CTPH[3:0]**: Charge transfer pulse high

These bits are set and cleared by software. They define the duration of the high state of the charge transfer pulse (charge of C_X).

0000: 1x t_{PGCLK}
0001: 2x t_{PGCLK}
...
1111: 16x t_{PGCLK}

Note: These bits must not be modified when an acquisition is ongoing.

Bits 27:24 **CTPL[3:0]**: Charge transfer pulse low

These bits are set and cleared by software. They define the duration of the low state of the charge transfer pulse (transfer of charge from C_X to C_S).

0000: 1x t_{PGCLK}
0001: 2x t_{PGCLK}
...
1111: 16x t_{PGCLK}

Note: These bits must not be modified when an acquisition is ongoing.

Note: Some configurations are forbidden. Please refer to the Section 22.3.4: Charge transfer acquisition sequence for details.

Bits 23:17 **SSD[6:0]**: Spread spectrum deviation

These bits are set and cleared by software. They define the spread spectrum deviation which consists in adding a variable number of periods of the SSCLK clock to the charge transfer pulse high state.

0000000: 1x t_{SSCLK}
0000001: 2x t_{SSCLK}
...
1111111: 128x t_{SSCLK}

Note: These bits must not be modified when an acquisition is ongoing.

Bit 16 **SSE**: Spread spectrum enable

This bit is set and cleared by software to enable/disable the spread spectrum feature.

0: Spread spectrum disabled
1: Spread spectrum enabled

Note: This bit must not be modified when an acquisition is ongoing.

Bit 15 **SSPSC**: Spread spectrum prescaler

This bit is set and cleared by software. It selects the AHB clock divider used to generate the spread spectrum clock (SSCLK).

0: f_{HCLK}
1: f_{HCLK} /2

Note: This bit must not be modified when an acquisition is ongoing.

Bits 14:12 **PGPSC[2:0]**: pulse generator prescaler

These bits are set and cleared by software.They select the AHB clock divider used to generate the pulse generator clock (PGCLK).

000: f_{HCLK}
001: f_{HCLK} /2
010: f_{HCLK} /4
011: f_{HCLK} /8
100: f_{HCLK} /16
101: f_{HCLK} /32
110: f_{HCLK} /64
111: f_{HCLK} /128

Note: These bits must not be modified when an acquisition is ongoing.

Note: Some configurations are forbidden. Please refer to the Section 22.3.4: Charge transfer acquisition sequence for details.

Bits 11:8 Reserved, must be kept at reset value.

Bits 7:5 **MCV[2:0]**: Max count value

These bits are set and cleared by software. They define the maximum number of charge transfer pulses that can be generated before a max count error is generated.

000: 255
001: 511
010: 1023
011: 2047
100: 4095
101: 8191
110: 16383
111: reserved

Note: These bits must not be modified when an acquisition is ongoing.

Bit 4 **IODEF**: I/O Default mode

This bit is set and cleared by software. It defines the configuration of all the TSC I/Os when there is no ongoing acquisition. When there is an ongoing acquisition, it defines the configuration of all unused I/Os (not defined as sampling capacitor I/O or as channel I/O).

0: I/Os are forced to output push-pull low
1: I/Os are in input floating

Note: This bit must not be modified when an acquisition is ongoing.

Bit 3 **SYNCPOL**: Synchronization pin polarity

This bit is set and cleared by software to select the polarity of the synchronization input pin.

0: Falling edge only
1: Rising edge and high level

Bit 2 **AM**: Acquisition mode

This bit is set and cleared by software to select the acquisition mode.

0: Normal acquisition mode (acquisition starts as soon as START bit is set)
1: Synchronized acquisition mode (acquisition starts if START bit is set and when the selected signal is detected on the SYNC input pin)

Note: This bit must not be modified when an acquisition is ongoing.

Bit 1 **START**: Start a new acquisition

This bit is set by software to start a new acquisition. It is cleared by hardware as soon as the acquisition is complete or by software to cancel the ongoing acquisition.

0: Acquisition not started
1: Start a new acquisition

Bit 0 **TSCE**: Touch sensing controller enable

This bit is set and cleared by software to enable/disable the touch sensing controller.

0: Touch sensing controller disabled
1: Touch sensing controller enabled

Note: When the touch sensing controller is disabled, TSC registers settings have no effect.

22.6.2 TSC interrupt enable register (TSC_IER)

Address offset: 0x04

Reset value: 0x0000 0000

31	30	29	28	27	26	25	24	23	22	21	20	19	18	17	16
Res.	Res.	Res.	Res.	Res.	Res.	Res.	Res.	Res.	Res.	Res.	Res.	Res.	Res.	Res.	Res.

15	14	13	12	11	10	9	8	7	6	5	4	3	2	1	0
Res.	Res.	Res.	Res.	Res.	Res.	Res.	Res.	Res.	Res.	Res.	Res.	Res.	Res.	MCEIE	EOAIE
														rw	rw

Bits 31:2 Reserved, must be kept at reset value.

Bit 1 **MCEIE**: Max count error interrupt enable

This bit is set and cleared by software to enable/disable the max count error interrupt.

0: Max count error interrupt disabled
1: Max count error interrupt enabled

Bit 0 **EOAIE**: End of acquisition interrupt enable

This bit is set and cleared by software to enable/disable the end of acquisition interrupt.

0: End of acquisition interrupt disabled
1: End of acquisition interrupt enabled

22.6.3 TSC interrupt clear register (TSC_ICR)

Address offset: 0x08

Reset value: 0x0000 0000

31	30	29	28	27	26	25	24	23	22	21	20	19	18	17	16
Res.	Res.	Res.	Res.	Res.	Res.	Res.	Res.	Res.	Res.	Res.	Res.	Res.	Res.	Res.	Res.

15	14	13	12	11	10	9	8	7	6	5	4	3	2	1	0
Res.	Res.	Res.	Res.	Res.	Res.	Res.	Res.	Res.	Res.	Res.	Res.	Res.	Res.	MCEIC	EOAIC
														rw	rw

Bits 31:2 Reserved, must be kept at reset value.

Bit 1 **MCEIC**: Max count error interrupt clear

This bit is set by software to clear the max count error flag and it is cleared by hardware when the flag is reset. Writing a ‘0’ has no effect.

0: No effect

1: Clears the corresponding MCEF of the TSC_ISR register

Bit 0 **EOAIC**: End of acquisition interrupt clear

This bit is set by software to clear the end of acquisition flag and it is cleared by hardware when the flag is reset. Writing a ‘0’ has no effect.

0: No effect

1: Clears the corresponding EOAF of the TSC_ISR register

22.6.4 TSC interrupt status register (TSC_ISR)

Address offset: 0x0C

Reset value: 0x0000 0000

31	30	29	28	27	26	25	24	23	22	21	20	19	18	17	16
Res.	Res.	Res.	Res.	Res.	Res.	Res.	Res.	Res.	Res.	Res.	Res.	Res.	Res.	Res.	Res.
15	14	13	12	11	10	9	8	7	6	5	4	3	2	1	0
Res.	Res.	Res.	Res.	Res.	Res.	Res.	Res.	Res.	Res.	Res.	Res.	Res.	Res.	MCEF	EOAF
														r	r

Bits 31:2 Reserved, must be kept at reset value.

Bit 1 **MCEF**: Max count error flag

This bit is set by hardware as soon as an analog I/O group counter reaches the max count value specified. It is cleared by software writing 1 to the bit MCEIC of the TSC_ICR register.

0: No max count error (MCE) detected
1: Max count error (MCE) detected

Bit 0 **EOAF**: End of acquisition flag

This bit is set by hardware when the acquisition of all enabled group is complete (all GxS bits of all enabled analog I/O groups are set or when a max count error is detected). It is cleared by software writing 1 to the bit EOAIC of the TSC_ICR register.

0: Acquisition is ongoing or not started
1: Acquisition is complete

22.6.5 TSC I/O hysteresis control register (TSC_IOHCR)

Address offset: 0x10

Reset value: 0xFFFF FFFF

31	30	29	28	27	26	25	24	23	22	21	20	19	18	17	16
Res.	Res.	Res.	Res.	G7_IO4	G7_IO3	G7_IO2	G7_IO1	G6_IO4	G6_IO3	G6_IO2	G6_IO1	G5_IO4	G5_IO3	G5_IO2	G5_IO1
				rw	rw	rw	rw	rw	rw	rw	rw	rw	rw	rw	rw
15	14	13	12	11	10	9	8	7	6	5	4	3	2	1	0
G4_IO4	G4_IO3	G4_IO2	G4_IO1	G3_IO4	G3_IO3	G3_IO2	G3_IO1	G2_IO4	G2_IO3	G2_IO2	G2_IO1	G1_IO4	G1_IO3	G1_IO2	G1_IO1
rw	rw	rw	rw	rw	rw	rw	rw	rw	rw	rw	rw	rw	rw	rw	rw

Bits 31:28 Reserved, must be kept at reset value.

Bits 27:0 **Gx_IOy**: Gx_IOy Schmitt trigger hysteresis mode

These bits are set and cleared by software to enable/disable the Gx_IOy Schmitt trigger hysteresis.

0: Gx_IOy Schmitt trigger hysteresis disabled
1: Gx_IOy Schmitt trigger hysteresis enabled

Note: These bits control the I/O Schmitt trigger hysteresis whatever the I/O control mode is (even if controlled by standard GPIO registers).

22.6.6 TSC I/O analog switch control register (TSC_IOASCR)

Address offset: 0x18

Reset value: 0x0000 0000

31	30	29	28	27	26	25	24	23	22	21	20	19	18	17	16
Res.	Res.	Res.	Res.	G7_IO4	G7_IO3	G7_IO2	G7_IO1	G6_IO4	G6_IO3	G6_IO2	G6_IO1	G5_IO4	G5_IO3	G5_IO2	G5_IO1
				rw	rw	rw	rw	rw	rw	rw	rw	rw	rw	rw	rw
15	14	13	12	11	10	9	8	7	6	5	4	3	2	1	0
G4_IO4	G4_IO3	G4_IO2	G4_IO1	G3_IO4	G3_IO3	G3_IO2	G3_IO1	G2_IO4	G2_IO3	G2_IO2	G2_IO1	G1_IO4	G1_IO3	G1_IO2	G1_IO1
rw	rw	rw	rw	rw	rw	rw	rw	rw	rw	rw	rw	rw	rw	rw	rw

Bits 31:28 Reserved, must be kept at reset value.

Bits 27:0 **Gx_IOy**: Gx_IOy analog switch enable

These bits are set and cleared by software to enable/disable the Gx_IOy analog switch.

0: Gx_IOy analog switch disabled (opened)
1: Gx_IOy analog switch enabled (closed)

Note: These bits control the I/O analog switch whatever the I/O control mode is (even if controlled by standard GPIO registers).

22.6.7 TSC I/O sampling control register (TSC_IOSCR)

Address offset: 0x20

Reset value: 0x0000 0000

31	30	29	28	27	26	25	24	23	22	21	20	19	18	17	16
Res.	Res.	Res.	Res.	G7_IO4	G7_IO3	G7_IO2	G7_IO1	G6_IO4	G6_IO3	G6_IO2	G6_IO1	G5_IO4	G5_IO3	G5_IO2	G5_IO1
				rw	rw	rw	rw	rw	rw	rw	rw	rw	rw	rw	rw
15	14	13	12	11	10	9	8	7	6	5	4	3	2	1	0
G4_IO4	G4_IO3	G4_IO2	G4_IO1	G3_IO4	G3_IO3	G3_IO2	G3_IO1	G2_IO4	G2_IO3	G2_IO2	G2_IO1	G1_IO4	G1_IO3	G1_IO2	G1_IO1
rw	rw	rw	rw	rw	rw	rw	rw	rw	rw	rw	rw	rw	rw	rw	rw

Bits 27:0 **Gx_IOy**: Gx_IOy sampling mode

These bits are set and cleared by software to configure the Gx_IOy as a sampling capacitor I/O. Only one I/O per analog I/O group must be defined as sampling capacitor.

0: Gx_IOy unused
1: Gx_IOy used as sampling capacitor

Note: These bits must not be modified when an acquisition is ongoing.

During the acquisition phase and even if the TSC peripheral alternate function is not enabled, as soon as the TSC_IOSCR bit is set, the corresponding GPIO analog switch is automatically controlled by the touch sensing controller.

22.6.8 TSC I/O channel control register (TSC_IOCCR)

Address offset: 0x28

Reset value: 0x0000 0000

31	30	29	28	27	26	25	24	23	22	21	20	19	18	17	16
Res.	Res.	Res.	Res.	G7_IO4	G7_IO3	G7_IO2	G7_IO1	G6_IO4	G6_IO3	G6_IO2	G6_IO1	G5_IO4	G5_IO3	G5_IO2	G5_IO1
				rw	rw	rw	rw	rw	rw	rw	rw	rw	rw	rw	rw
15	14	13	12	11	10	9	8	7	6	5	4	3	2	1	0
G4_IO4	G4_IO3	G4_IO2	G4_IO1	G3_IO4	G3_IO3	G3_IO2	G3_IO1	G2_IO4	G2_IO3	G2_IO2	G2_IO1	G1_IO4	G1_IO3	G1_IO2	G1_IO1
rw	rw	rw	rw	rw	rw	rw	rw	rw	rw	rw	rw	rw	rw	rw	rw

Bits 27:0 **Gx_IOy**: Gx_IOy channel mode

These bits are set and cleared by software to configure the Gx_IOy as a channel I/O.

0: Gx_IOy unused

1: Gx_IOy used as channel

Note: These bits must not be modified when an acquisition is ongoing.

During the acquisition phase and even if the TSC peripheral alternate function is not enabled, as soon as the TSC_IOCCR bit is set, the corresponding GPIO analog switch is automatically controlled by the touch sensing controller.

22.6.9 TSC I/O group control status register (TSC_IOGCSR)

Address offset: 0x30

Reset value: 0x0000 0000

31	30	29	28	27	26	25	24	23	22	21	20	19	18	17	16
Res.	Res.	Res.	Res.	Res.	Res.	Res.	Res.	Res.	G7S	G6S	G5S	G4S	G3S	G2S	G1S
									r	r	r	r	r	r	r
15	14	13	12	11	10	9	8	7	6	5	4	3	2	1	0
Res.	Res.	Res.	Res.	Res.	Res.	Res.	Res.	Res.	G7E	G6E	G5E	G4E	G3E	G2E	G1E
									rw	rw	rw	rw	rw	rw	rw

Bits 31:23 Reserved, must be kept at reset value.

Bits 22:16 **GxS**: Analog I/O group x status

These bits are set by hardware when the acquisition on the corresponding enabled analog I/O group x is complete. They are cleared by hardware when a new acquisition is started.

0: Acquisition on analog I/O group x is ongoing or not started
1: Acquisition on analog I/O group x is complete

Note: When a max count error is detected the remaining GxS bits of the enabled analog I/O groups are not set.

Bits 15:7 Reserved, must be kept at reset value.

Bits 6:0 **GxE**: Analog I/O group x enable

These bits are set and cleared by software to enable/disable the acquisition (counter is counting) on the corresponding analog I/O group x.

0: Acquisition on analog I/O group x disabled
1: Acquisition on analog I/O group x enabled

22.6.10 TSC I/O group x counter register (TSC_IOGxCR) (x = 1..7)

Address offset: 0x30 + 0x04 x Analog I/O group number

Reset value: 0x0000 0000

31	30	29	28	27	26	25	24	23	22	21	20	19	18	17	16
Res.	Res.	Res.	Res.	Res.	Res.	Res.	Res.	Res.	Res.	Res.	Res.	Res.	Res.	Res.	Res.

15	14	13	12	11	10	9	8	7	6	5	4	3	2	1	0
Res.	Res.	CNT[13:0]													
		r	r	r	r	r	r	r	r	r	r	r	r	r	r

Bits 31:14 Reserved, must be kept at reset value.

Bits 13:0 **CNT[13:0]**: Counter value

These bits represent the number of charge transfer cycles generated on the analog I/O group x to complete its acquisition (voltage across C_S has reached the threshold).

22.6.11 TSC register map

Table 102. TSC register map and reset values

Offset	Register	31	30	29	28	27	26	25	24	23	22	21	20	19	18	17	16	15	14	13	12	11	10	9	8	7	6	5	4	3	2	1	0
0x0000	**TSC_CR**	CTPH[3:0]				CTPL[3:0]				SSD[6:0]							SSE	SSPSC	PGPSC[2:0]			Res.	Res.	Res.	Res.	MCV [2:0]			IODEF	SYNCPOL	AM	START	TSCE
	Reset value	0	0	0	0	0	0	0	0	0	0	0	0	0	0	0	0	0	0	0	0					0	0	0	0	0	0	0	0
0x0004	**TSC_IER**	Res.	Res.	Res.	Res.	Res.	Res.	Res.	Res.	Res.	Res.	Res.	Res.	Res.	Res.	Res.	Res.	Res.	Res.	Res.	Res.	Res.	Res.	Res.	Res.	Res.	Res.	Res.	Res.	Res.	Res.	MCEIE	EOAIE
	Reset value																															0	0
0x0008	**TSC_ICR**	Res.	Res.	Res.	Res.	Res.	Res.	Res.	Res.	Res.	Res.	Res.	Res.	Res.	Res.	Res.	Res.	Res.	Res.	Res.	Res.	Res.	Res.	Res.	Res.	Res.	Res.	Res.	Res.	Res.	Res.	MCEIC	EOAIC
	Reset value																															0	0
0x000C	**TSC_ISR**	Res.	Res.	Res.	Res.	Res.	Res.	Res.	Res.	Res.	Res.	Res.	Res.	Res.	Res.	Res.	Res.	Res.	Res.	Res.	Res.	Res.	Res.	Res.	Res.	Res.	Res.	Res.	Res.	Res.	Res.	MCEF	EOAF
	Reset value																															0	0
0x0010	**TSC_IOHCR**	Res.	Res.	Res.	Res.	G7_IO4	G7_IO3	G7_IO2	G7_IO1	G6_IO4	G6_IO3	G6_IO2	G6_IO1	G5_IO4	G5_IO3	G5_IO2	G5_IO1	G4_IO4	G4_IO3	G4_IO2	G4_IO1	G3_IO4	G3_IO3	G3_IO2	G3_IO1	G2_IO4	G2_IO3	G2_IO2	G2_IO1	G1_IO4	G1_IO3	G1_IO2	G1_IO1
	Reset value					1	1	1	1	1	1	1	1	1	1	1	1	1	1	1	1	1	1	1	1	1	1	1	1	1	1	1	1
0x0014	Reserved																																
0x0018	**TSC_IOASCR**	Res.	Res.	Res.	Res.	G7_IO4	G7_IO3	G7_IO2	G7_IO1	G6_IO4	G6_IO3	G6_IO2	G6_IO1	G5_IO4	G5_IO3	G5_IO2	G5_IO1	G4_IO4	G4_IO3	G4_IO2	G4_IO1	G3_IO4	G3_IO3	G3_IO2	G3_IO1	G2_IO4	G2_IO3	G2_IO2	G2_IO1	G1_IO4	G1_IO3	G1_IO2	G1_IO1
	Reset value					0	0	0	0	0	0	0	0	0	0	0	0	0	0	0	0	0	0	0	0	0	0	0	0	0	0	0	0
0x001C	Reserved																																
0x0020	**TSC_IOSCR**	Res.	Res.	Res.	Res.	G7_IO4	G7_IO3	G7_IO2	G7_IO1	G6_IO4	G6_IO3	G6_IO2	G6_IO1	G5_IO4	G5_IO3	G5_IO2	G5_IO1	G4_IO4	G4_IO3	G4_IO2	G4_IO1	G3_IO4	G3_IO3	G3_IO2	G3_IO1	G2_IO4	G2_IO3	G2_IO2	G2_IO1	G1_IO4	G1_IO3	G1_IO2	G1_IO1
	Reset value					0	0	0	0	0	0	0	0	0	0	0	0	0	0	0	0	0	0	0	0	0	0	0	0	0	0	0	0
0x0024	Reserved																																
0x0028	**TSC_IOCCR**	Res.	Res.	Res.	Res.	G7_IO4	G7_IO3	G7_IO2	G7_IO1	G6_IO4	G6_IO3	G6_IO2	G6_IO1	G5_IO4	G5_IO3	G5_IO2	G5_IO1	G4_IO4	G4_IO3	G4_IO2	G4_IO1	G3_IO4	G3_IO3	G3_IO2	G3_IO1	G2_IO4	G2_IO3	G2_IO2	G2_IO1	G1_IO4	G1_IO3	G1_IO2	G1_IO1
	Reset value					0	0	0	0	0	0	0	0	0	0	0	0	0	0	0	0	0	0	0	0	0	0	0	0	0	0	0	0
0x002C	Reserved																																
0x0030	**TSC_IOGCSR**	Res.	Res.	Res.	Res.	Res.	Res.	Res.	Res.	Res.	G7S	G6S	G5S	G4S	G3S	G2S	G1S	Res.	Res.	Res.	Res.	Res.	Res.	Res.	Res.	Res.	G7E	G6E	G5E	G4E	G3E	G2E	G1E
	Reset value										0	0	0	0	0	0	0										0	0	0	0	0	0	0
0x0034	**TSC_IOG1CR**	Res.	Res.	Res.	Res.	Res.	Res.	Res.	Res.	Res.	Res.	Res.	Res.	Res.	Res.	Res.	Res.	Res.	Res.	CNT[13:0]													
	Reset value																			0	0	0	0	0	0	0	0	0	0	0	0	0	0
0x0038	**TSC_IOG2CR**	Res.	Res.	Res.	Res.	Res.	Res.	Res.	Res.	Res.	Res.	Res.	Res.	Res.	Res.	Res.	Res.	Res.	Res.	CNT[13:0]													
	Reset value																			0	0	0	0	0	0	0	0	0	0	0	0	0	0

Table 102. TSC register map and reset values (continued)

Offset	Register	31	30	29	28	27	26	25	24	23	22	21	20	19	18	17	16	15	14	13	12	11	10	9	8	7	6	5	4	3	2	1	0
0x003C	**TSC_IOG3CR**	Res.	Res.	Res.	Res.	Res.	Res.	Res.	Res.	Res.	Res.	Res.	Res.	Res.	Res.	Res.	Res.	Res.	Res.	CNT[13:0]													
	Reset value																			0	0	0	0	0	0	0	0	0	0	0	0	0	0
0x0040	**TSC_IOG4CR**	Res.	Res.	Res.	Res.	Res.	Res.	Res.	Res.	Res.	Res.	Res.	Res.	Res.	Res.	Res.	Res.	Res.	Res.	CNT[13:0]													
	Reset value																			0	0	0	0	0	0	0	0	0	0	0	0	0	0
0x0044	**TSC_IOG5CR**	Res.	Res.	Res.	Res.	Res.	Res.	Res.	Res.	Res.	Res.	Res.	Res.	Res.	Res.	Res.	Res.	Res.	Res.	CNT[13:0]													
	Reset value																			0	0	0	0	0	0	0	0	0	0	0	0	0	0
0x0048	**TSC_IOG6CR**	Res.	Res.	Res.	Res.	Res.	Res.	Res.	Res.	Res.	Res.	Res.	Res.	Res.	Res.	Res.	Res.	Res.	Res.	CNT[13:0]													
	Reset value																			0	0	0	0	0	0	0	0	0	0	0	0	0	0
0x004C	**TSC_IOG7CR**	Res.	Res.	Res.	Res.	Res.	Res.	Res.	Res.	Res.	Res.	Res.	Res.	Res.	Res.	Res.	Res.	Res.	Res.	CNT[13:0]													
	Reset value																			0	0	0	0	0	0	0	0	0	0	0	0	0	0

Refer to *Section 2.2.2 on page 62* for the register boundary addresses.

23 Random number generator (RNG)

23.1 Introduction

The RNG processor is a random number generator, based on a continuous analog noise, that provides a random 32-bit value to the host when read.

The RNG passed the FIPS PUB 140-2 (2001 October 10) tests with a success ratio of 99%.

23.2 RNG main features

- It delivers 32-bit random numbers, produced by an analog generator
- 40 periods of the RNG_CLK clock signal between two consecutive random numbers
- Monitoring of the RNG entropy to flag abnormal behavior (generation of stable values, or of a stable sequence of values)
- It can be disabled to reduce power consumption

23.3 RNG functional description

Figure 145 shows the RNG block diagram.

Figure 145. Block diagram

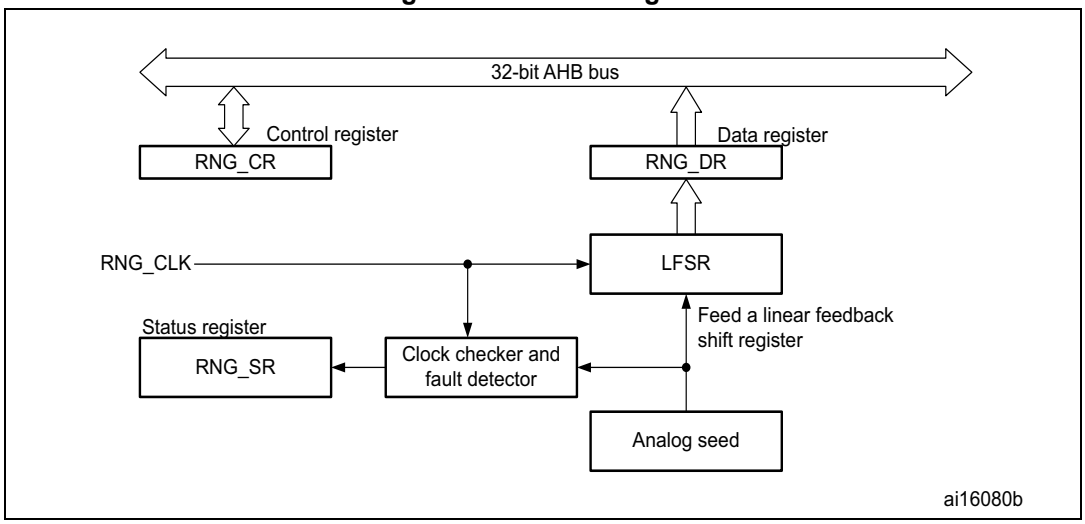

1. For more details about RNG Clock (RNG_CLK) source, please refer to *Section 6: Reset and clock control (RCC)*.

The random number generator implements an analog circuit. This circuit generates seeds that feed a linear feedback shift register (RNG_LFSR) in order to produce 32-bit random numbers.

The analog circuit is made of several ring oscillators whose outputs are XORed to generate the seeds. The RNG_LFSR is clocked by a dedicated clock (RNG_CLK) at a constant frequency, so that the quality of the random number is independent of the HCLK frequency. The contents of the RNG_LFSR are transferred into the data register (RNG_DR) when a significant number of seeds have been introduced into the RNG_LFSR.

In parallel, the analog seed and the dedicated RNG_CLK clock are monitored. Status bits (in the RNG_SR register) indicate when an abnormal sequence occurs on the seed or when the frequency of the RNG_CLK clock is too low. An interrupt can be generated when an error is detected.

23.3.1 Operation

To run the RNG, follow the steps below:

1. Enable the interrupt if needed (to do so, set the IE bit in the RNG_CR register). An interrupt is generated when a random number is ready or when an error occurs.
2. Enable the random number generation by setting the RNGEN bit in the RNG_CR register. This activates the analog part, the RNG_LFSR and the error detector.
3. At each interrupt, check that no error occurred (the SEIS and CEIS bits should be ‘0’ in the RNG_SR register) and that a random number is ready (the DRDY bit is ‘1’ in the RNG_SR register). The contents of the RNG_DR register can then be read.

As required by the FIPS PUB (Federal Information Processing Standard Publication) 140-2, the first random number generated after setting the RNGEN bit should not be used, but saved for comparison with the next generated random number. Each subsequent generated random number has to be compared with the previously generated number. The test fails if any two compared numbers are equal (continuous random number generator test).

23.3.2 Error management

If the CEIS bit is read as ‘1’ (clock error)

In the case of a clock, the RNG is no more able to generate random numbers because the RNG_CLK clock is not correct. Check that the clock controller is correctly configured to provide the RNG clock and clear the CEIS bit. The RNG can work when the CECS bit is ‘0’. The clock error has no impact on the previously generated random numbers, and the RNG_DR register contents can be used.

If the SEIS bit is read as ‘1’ (seed error)

In the case of a seed error, the generation of random numbers is interrupted for as long as the SECS bit is ‘1’. If a number is available in the RNG_DR register, it must not be used because it may not have enough entropy.

What you should do is clear the SEIS bit, then clear and set the RNGEN bit to reinitialize and restart the RNG.

23.4 RNG registers

The RNG is associated with a control register, a data register and a status register. They have to be accessed by words (32 bits).

23.4.1 RNG control register (RNG_CR)

Address offset: 0x00

Reset value: 0x0000 0000

31	30	29	28	27	26	25	24	23	22	21	20	19	18	17	16
Res.	Res.	Res.	Res.	Res.	Res.	Res.	Res.	Res.	Res.	Res.	Res.	Res.	Res.	Res.	Res.
15	14	13	12	11	10	9	8	7	6	5	4	3	2	1	0
Res.	Res.	Res.	Res.	Res.	Res.	Res.	Res.	Res.	Res.	Res.	Res.	IE	RNGEN	Res.	Res.
												rw	rw		

Bits 31:4 Reserved, must be kept at reset value

Bit 3 **IE:** Interrupt enable

0: RNG Interrupt is disabled
1: RNG Interrupt is enabled. An interrupt is pending as soon as DRDY=1 or SEIS=1 or CEIS=1 in the RNG_SR register.

Bit 2 **RNGEN:** Random number generator enable

0: Random number generator is disabled
1: random Number Generator is enabled.

Bits 1:0 Reserved, must be kept at reset value

23.4.2 RNG status register (RNG_SR)

Address offset: 0x04

Reset value: 0x0000 0000

31	30	29	28	27	26	25	24	23	22	21	20	19	18	17	16
Res.	Res.	Res.	Res.	Res.	Res.	Res.	Res.	Res.	Res.	Res.	Res.	Res.	Res.	Res.	Res.
15	14	13	12	11	10	9	8	7	6	5	4	3	2	1	0
Res.	Res.	Res.	Res.	Res.	Res.	Res.	Res.	Res.	SEIS	CEIS	Res.	Res.	SECS	CECS	DRDY
									rc_w0	rc_w0			r	r	r

Bits 31:7 Reserved, must be kept at reset value

Bit 6 **SEIS:** Seed error interrupt status

This bit is set at the same time as SECS, it is cleared by writing it to 0.

0: No faulty sequence detected

1: One of the following faulty sequences has been detected:

– More than 64 consecutive bits at the same value (0 or 1)

– More than 32 consecutive alternations of 0 and 1 (0101010101...01)

An interrupt is pending if IE = 1 in the RNG_CR register.

Bit 5 **CEIS:** Clock error interrupt status

This bit is set at the same time as CECS, it is cleared by writing it to 0.

0: The RNG_CLK clock was correctly detected

1: The RNG_CLK was not correctly detected ($f_{RNG_CLK} < f_{HCLK}/16$)

An interrupt is pending if IE = 1 in the RNG_CR register.

Bits 4:3 Reserved, must be kept at reset value

Bit 2 **SECS:** Seed error current status

0: No faulty sequence has currently been detected. If the SEIS bit is set, this means that a faulty sequence was detected and the situation has been recovered.

1: One of the following faulty sequences has been detected:

– More than 64 consecutive bits at the same value (0 or 1)

– More than 32 consecutive alternations of 0 and 1 (0101010101...01)

Bit 1 **CECS:** Clock error current status

0: The RNG_CLK clock has been correctly detected. If the CEIS bit is set, this means that a clock error was detected and the situation has been recovered

1: The RNG_CLK was not correctly detected ($f_{RNG_CLK} < f_{HCLK}/16$).

Bit 0 **DRDY:** Data ready

0: The RNG_DR register is not yet valid, no random data is available

1: The RNG_DR register contains valid random data

Note: An interrupt is pending if IE = 1 in the RNG_CR register.

Once the RNG_DR register has been read, this bit returns to 0 until a new valid value is computed.

23.4.3 RNG data register (RNG_DR)

Address offset: 0x08

Reset value: 0x0000 0000

The RNG_DR register is a read-only register that delivers a 32-bit random value when read. After being read, this register delivers a new random value after a maximum time of 40 periods of the RNG_CLK clock. The software must check that the DRDY bit is set before reading the RNDATA value.

31	30	29	28	27	26	25	24	23	22	21	20	19	18	17	16
RNDATA															
r	r	r	r	r	r	r	r	r	r	r	r	r	r	r	r
15	14	13	12	11	10	9	8	7	6	5	4	3	2	1	0
RNDATA															
r	r	r	r	r	r	r	r	r	r	r	r	r	r	r	r

Bits 31:0 **RNDATA:** Random data
32-bit random data.

23.4.4 RNG register map

Table 103 gives the RNG register map and reset values.

Table 103. RNG register map and reset map

Offset	Register name reset value	31	30	29	28	27	26	25	24	23	22	21	20	19	18	17	16	15	14	13	12	11	10	9	8	7	6	5	4	3	2	1	0
0x00	**RNG_CR**	Res.	Res.	Res.	Res.	Res.	Res.	Res.	Res.	Res.	Res.	Res.	Res.	Res.	Res.	Res.	Res.	Res.	Res.	Res.	Res.	Res.	Res.	Res.	Res.	Res.	Res.	Res.	Res.	IE	RNGEN	Res.	Res.
	Reset value																													0	0		
0x04	**RNG_SR**	Res.	Res.	Res.	Res.	Res.	Res.	Res.	Res.	Res.	Res.	Res.	Res.	Res.	Res.	Res.	Res.	Res.	Res.	Res.	Res.	Res.	Res.	Res.	Res.	Res.	SEIS	CEIS	Res.	Res.	SECS	CECS	DRDY
	Reset value																										0	0			0	0	0
0x08	**RNG_DR**	RNDATA[31:0]																															
	Reset value	0	0	0	0	0	0	0	0	0	0	0	0	0	0	0	0	0	0	0	0	0	0	0	0	0	0	0	0	0	0	0	0

Refer to *Section 2.2.2 on page 62* for the register boundary addresses.

24 Advanced encryption standard hardware accelerator (AES)

This section does not apply to STM32L431xx and STM32L433xx devices.

24.1 Introduction

The AES hardware accelerator can be used to both encipher and decipher data using AES algorithm. It is a fully compliant implementation of the following standard:

- The advanced encryption standard (AES) as defined by Federal Information Processing Standards Publication (FIPS PUB 197, 2001 November 26)

The accelerator encrypts and decrypts 128-bit blocks using either 128-bit or 256-bit key length. It can also perform key derivation. The encryption or decryption key is stored in an internal register in order to minimize write operations by the CPU or DMA when processing several data blocks using the same key.

By default, electronic codebook mode (ECB) is selected. Cipher block chaining (CBC), counter (CTR) mode, Galois counter (GCM) mode, Galois message authentication code (GMAC) or cipher message authentication code mode (CMAC) chaining algorithms are also supported by the hardware.

The AES supports DMA transfer for incoming and for outcoming data (2 DMA channels required).

24.2 AES main features

- Encryption/decryption using AES Rijndael Block Cipher algorithm
- NIST FIPS 197 compliant implementation of AES encryption/decryption algorithm
- 256-bit register for storing the encryption, decryption or derivation key (8x 32-bit registers)
- Electronic codebook (ECB), cipher block chaining (CBC), counter mode (CTR), Galois counter mode (GCM), Galois message authentication code mode (GMAC) and cipher message authentication code mode (CMAC) supported
- Key scheduler
- Key derivation for decryption
- 128-bit data block processing
- 128-bit, 256-bit key length
- 1x32-bit INPUT buffer and 1x32-bit OUTPUT buffer
- Register access supporting 32-bit data width only
- One register used as a 128-bit initialization vector when AES is configured in CBC mode or used as a 32-bit counter initialization when CTR, GCM or CMAC mode is selected
- Automatic data flow control with support of direct memory access (DMA) using 2 channels, one for incoming data, and one for outcoming data.
- Suspend a message if another message with a higher priority needs to be processed
- Cycles to process for each mode

24.3 AES functional description

Figure 146 shows the block diagram of the AES accelerator.

Figure 146. AES block diagram

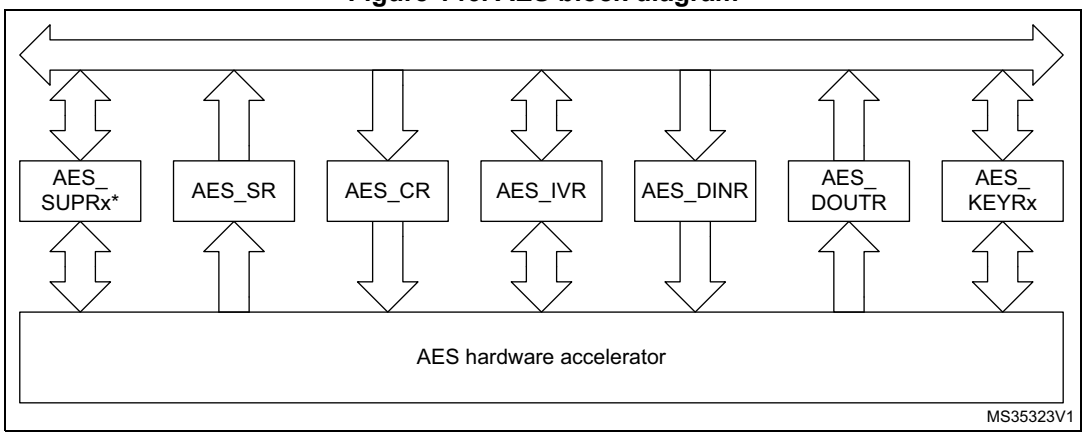

The AES accelerator processes data blocks of 128-bits (4 words) using a key with a length of either 256 bits or 128 bits, and an initialization vector when CBC, CTR, GCM, GMAC or CMAC chaining mode is selected.

It provides 4 operating modes:

- Mode 1: encryption using the encryption key stored in the AES_KEYRx registers.
- Mode 2: key derivation stored internally in the AES_KEYRx registers at the end of the key derivation processed from the encryption key stored in this register before enabling the AES. This mode is independent from the AES chaining mode selection.
- Mode 3: decryption using a given (pre-computed) decryption key stored in the AES_KEYRx registers.
- Mode 4: key derivation + decryption using an encryption key stored in the AES_KEYRx registers (not used when the AES is configured in Counter mode for perform a chaining algorithm).

The operating mode is selected by programming bits MODE[1:0] into the AES_CR register. The mode must be changed only when the AES is disabled (bit EN = 0 in the AES_CR register).

Note: The AES_KEYRx registers must be stored before enabling the AES.

To select which one of the ECB, CBC, CTR, GCM, GMAC or CMAC mode is going to be used for the cryptographic solution, it is mandatory to write the bit CHMOD[2:0] of the AES_CR register and the AES_IVR register when the AES is disabled (bit EN = 0 in the AES_CR register).

Once enabled (bit EN = 1 in AES_CR register), the AES is in the input phase, waiting for the software to write the input data words into the AES_DINR (4 words) for the modes 1, 3 or 4. The data correspond either to the plaintext message or the cipher message. A wait cycle is automatically inserted between two consecutive writes to the AES_DINR register in order to send, interleaved with the data, the key to the AES processor.

For mode 2, the key derivation processing is started immediately after the EN bit in the AES_CR register is set. It requires that the AES_KEYRx registers are loaded with the encrypted key before enabling the AES. At the end of the key derivation processing computation complete flag (CCF) in AES_SR register is set. The derivative key is available

in the AES_KEYRx registers and the AES is disabled by hardware. In this mode, the AES_KEYRx registers must not be read when AES is enabled and until the CCF flag is set to 1 by hardware.

The status flag CCF in the AES_SR register is set once the computation phase is complete. An interrupt can be generated if bit CCFIE = 1 (CCF interrupt enable) in the AES_CR register. The software can then read back the data from the AES_DOUTR register (for modes 1, 3, 4) or from the AES_KEYRx registers (if mode 2 is selected).

The flag CCF has no meaning when DMA is used (DMAOUTEN = 1 in the AES_CR register), because the reading the AES_DOUTR register is managed by DMA automatically without any software action at the end of the computation phase.

The operation ends with the output phase, during which the software reads successively the 4 output data words from the AES_DOUTR register in mode 1, 3 or 4. In mode 2 (key derivation mode), the data is automatically stored in the AES_KEYRx registers and the AES is disabled by hardware. Then, software can select mode 3 (decryption mode) before it enables the AES to start the decryption using this derivative key.

During the input and output phases, the software must read or write the data bytes successively (except in mode 2) but the AES is tolerant of any delays occurring between each read or write operation (example: if servicing another interrupt at this time).

The read error flag (RDERR) and write error flag (WRERR) in the AES_SR register are set when an unexpected read or write operation is detected. An interrupt can be generated if the error interrupt enable (ERRIE) bit is set in the AES_CR register. AES is not disabled after an error detection and continues processing as normal.

It is also possible to use the general purpose DMA to write the input words and to read the output words (refer to *Figure 161* and *Figure 162*).

The AES can be re-initialized at any moment by resetting the EN bit in the AES_CR register. Then the AES can be re-started from the beginning by setting EN = 1, waiting for the first input data byte to be written (except in mode 2 where key derivation processing starts as soon as the EN bit is set, starting from the value stored in the AES_KEYRx registers).

24.4 Encryption and derivation keys

The AES_KEYRx registers are used to store the encryption or decryption keys. These four (respectively eight) registers are organized in little-endian configuration: Register AES_KEYR0 has to be loaded with the 32-bit LSB of the key. Consequently, AES_KEYR3 (respectively AES_KEYR7) has to be loaded with the 32-bit MSB of the 128-bit key (respectively with the 32-bit MSB of the 256-bit key).

Note: 1 AES_KEYR0 to AES_KEYR3 registers are used when key length equal to 128-bit or 256-bit is selected.

2 AES_KEYR4 to AES_KEYR7 registers are used only when key length equal to 256-bit is selected.

The key for encryption or decryption must be stored in these registers when the AES is disabled (EN = 0 into the AES_CR register). Their endianess are fixed.

In mode 2 (key derivation), the AES_KEYRx needs to be loaded with the encryption key. Then, the AES has to be enabled. At the end of the computation phase, the derivation key is stored automatically in the AES_KEYRx registers, overwriting the previous encryption key. The AES is disabled by hardware when the derivation key is available. If the software needs

to switch the AES to mode 3 (decryption mode), there is no need to write the AES_KEYRx registers if their content corresponds to the derivation key (previously computed by mode 2).

In mode 4 (key derivation + decryption), the AES_KEYRx registers contain only the encryption key. The derivation key is calculated internally without any write to these registers.

24.5 AES chaining algorithms

Five algorithms are supported by the AES hardware and can be selected through the CHMOD[2:0] bits in the AES_CR register when the AES is disabled (bit EN = 0):

- Electronic codebook (ECB)
- Cipher block chaining (CBC)
- Counter mode (CTR)
- Galois counter mode (GCM) and Galois message authentication code mode (GMAC)
- Cipher message authentication code mode (CMAC)

24.5.1 Electronic codebook (ECB)

This is the default mode. This mode does not use the AES_IVR register. There are no chaining operations. The message is divided into blocks and each block is encrypted separately.

Figure 147 and *Figure 148* describe the principle of the electronic codebook algorithm for encryption and decryption respectively.

Figure 147. ECB encryption mode

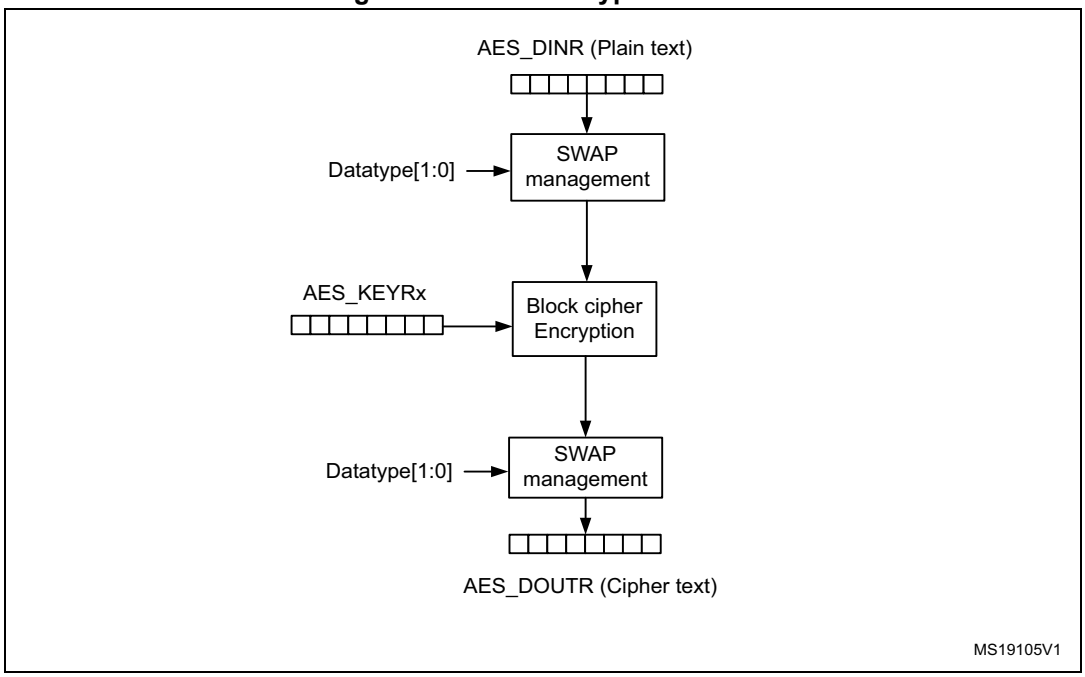

Figure 148. ECB decryption mode

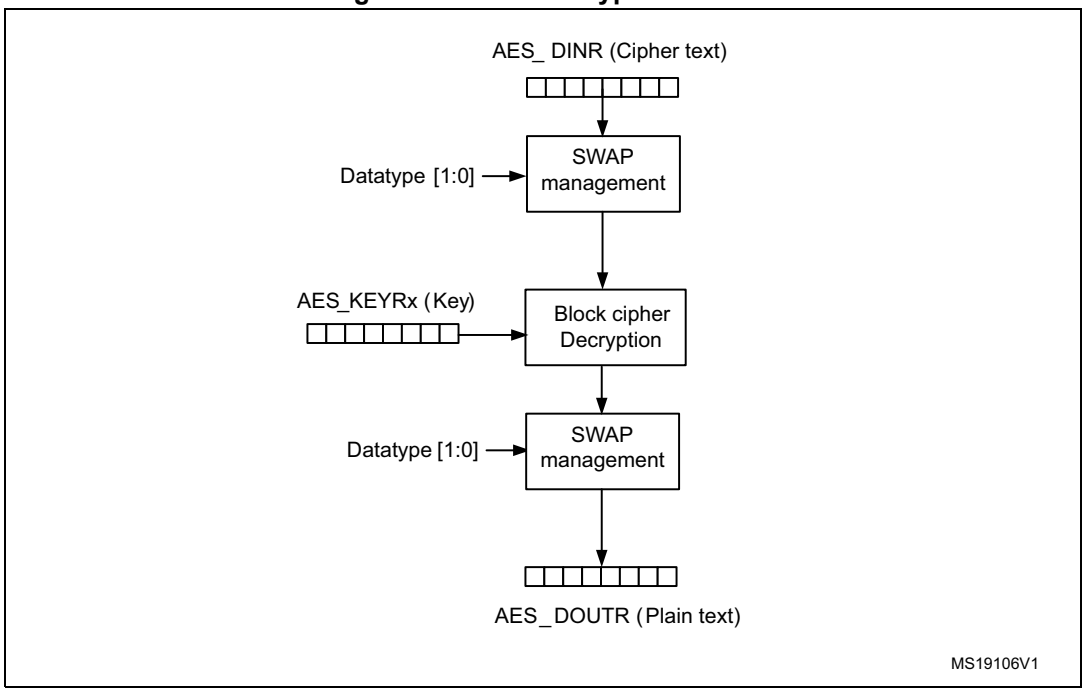

24.5.2 Cipher block chaining (CBC)

In cipher-block chaining (CBC) mode, each block of plain text is XORed with the previous cipher text block before being encrypted. To make each message unique, an initialization vector (AES_IVRx) is used during the first block processing.

The initialization vector is XORed after the swapping management block during encryption mode and before it in decryption mode (refer to *Figure 149* and *Figure 150*).

Figure 149. CBC mode encryption

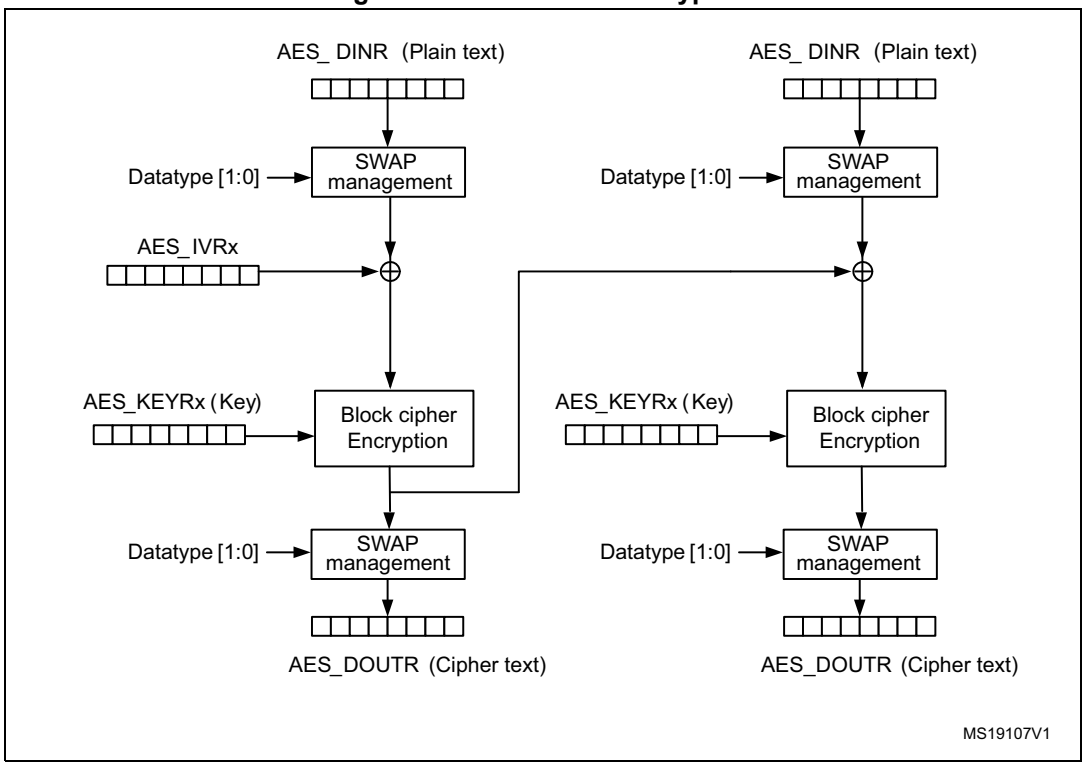

Figure 150. CBC mode decryption

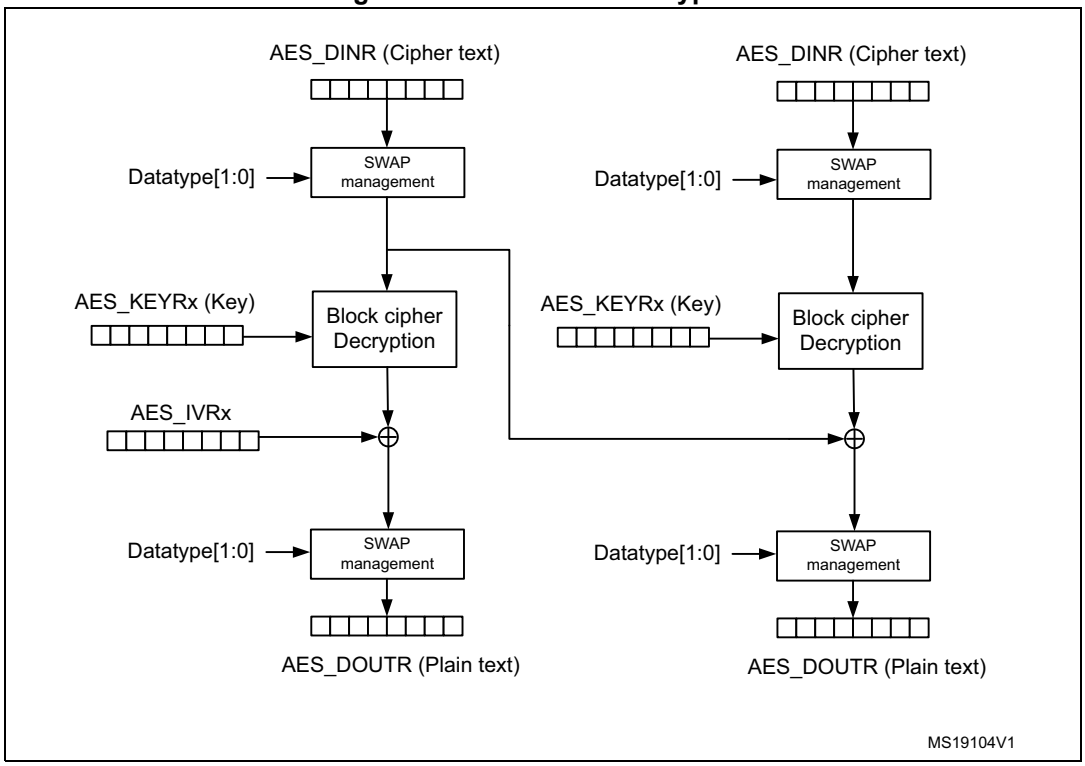

Note: When the AES is enabled, reading the AES_IVR returns the value 0x0000 0000.

Suspended mode for a given message

It is possible to suspend a message if another message with a higher priority needs to be processed. After sending this highest priority message, the suspended message may be resumed in both encryption or decryption mode. This feature is available only when the data transfer is done by CPU accesses to the AES_DOUTR and AES_DINR registers. It is advised to not use it when the DMA controller is managing the data transfer.

For correct operation, the message must be suspended at the end of a block processing (after the fourth read of the AES_DOUTR register and before the next AES_DINR write access corresponding to the input of the next block to be processed).

The AES should be disabled writing bit EN = 0 in the AES_CR register. The software has to read the AES_IVRx which contains the latest value to be used for the chaining XOR operation before message interruption. This value has to be stored for reuse by writing the AES_IVRx registers as soon as the interrupted message has to be resumed (when AES is disabled).

Note: This does not break the chaining operation and the message processing can be resumed as soon as the AES is enabled again to send the next 128-bit data block.

Note: This behavior is valid whatever the AES configuration (encryption or decryption mode).

Figure 151 gives an example of a message 1 which is suspended in order to send a higher priority message 2, shorter than message 1. At the end of the 128-bit block processing, AES is disabled. The AES_IVR register is read back to store the value to be retrieved later on when the message is resumed, in order not to break the chaining operation. Then, the AES is configured to send message 2 and it is enabled to start processing. At the end of message 2 processing, AES has to be disabled again and the AES_IVRx registers have to be loaded with the value previously stored when the message 1 was interrupted. Then software has to restart from the input value corresponding to block 4 as soon as AES is enabled to resume message 1.

Figure 151. Example of suspend mode management

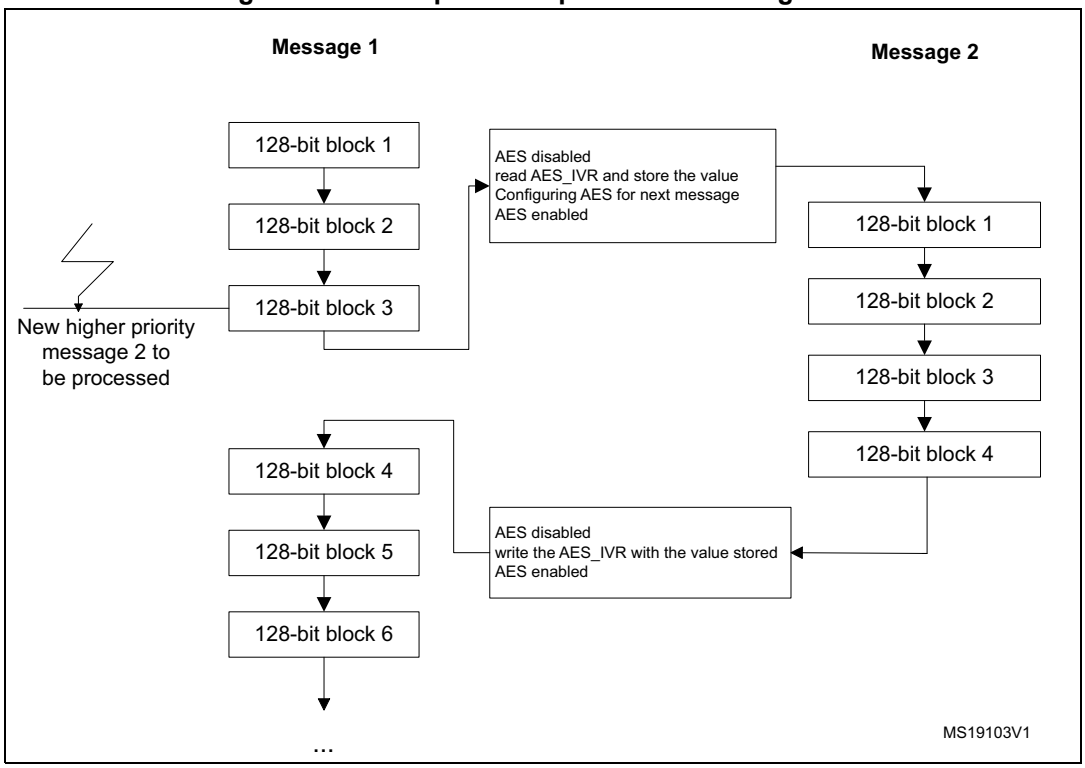

24.5.3 Counter Mode (CTR)

In counter mode, a 32-bit counter is used in addition to a nonce value for the XOR operation with the cipher text or plain text (refer to *Figure 152* and *Figure 153*).

Figure 152. CTR mode encryption

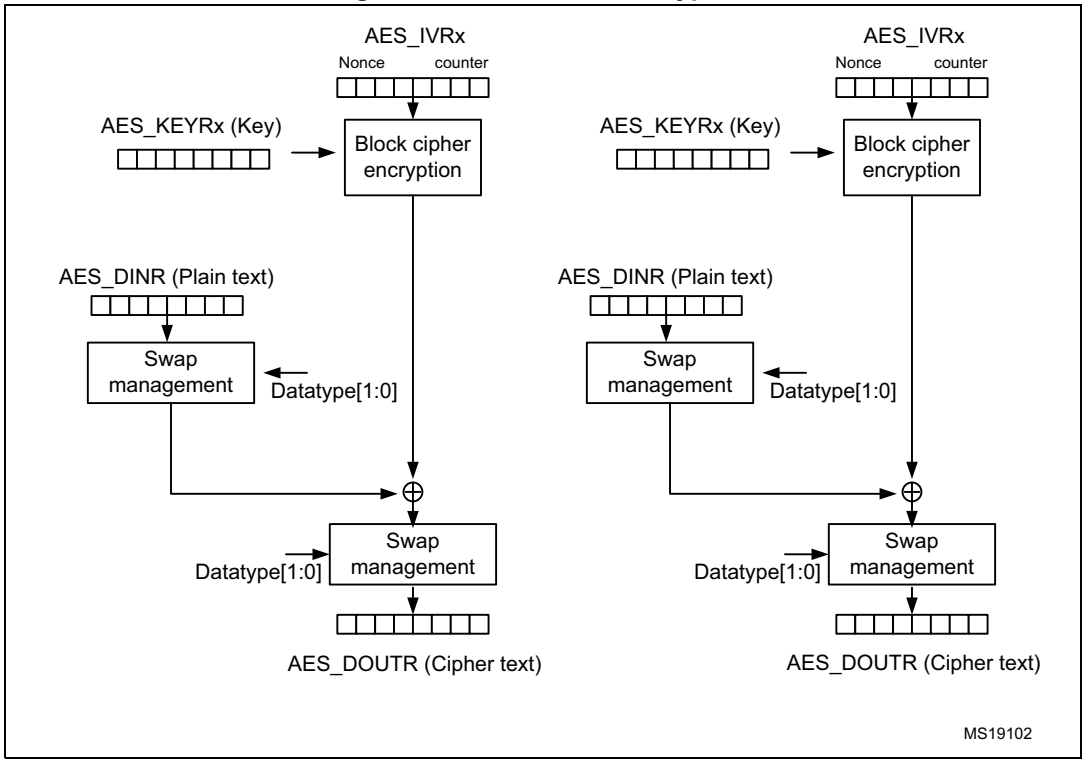

Figure 153. CTR mode decryption

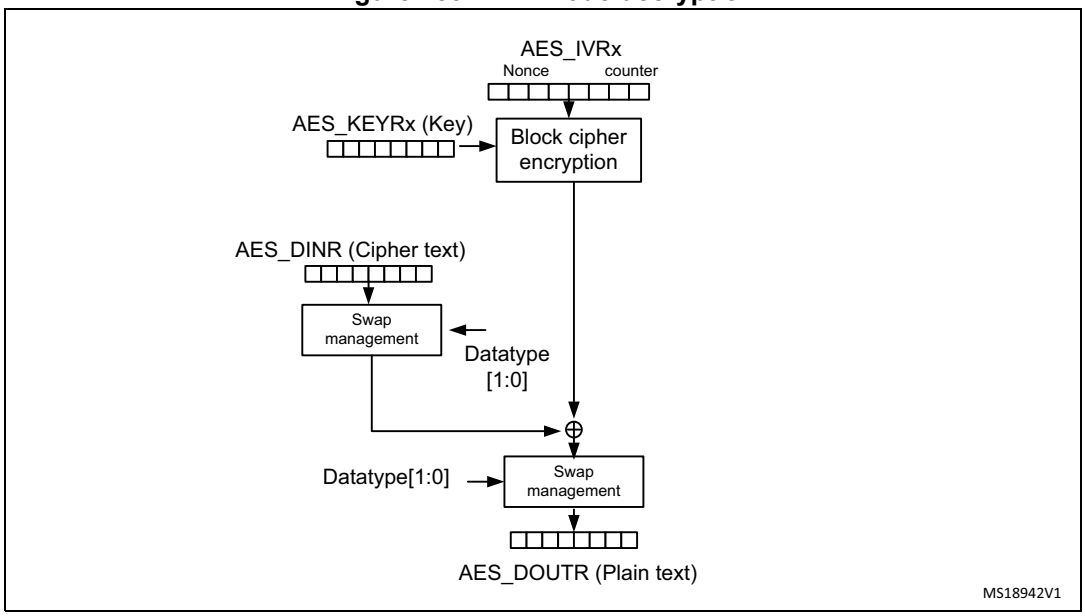

The nonce value and 32-bit counter are accessible through the AES_IVRx register and organized like below in *Figure 154*:

Figure 154. 32-bit counter + nonce organization

In counter mode, the counter is incremented from the initialized value for each block to be processed in order to guarantee a unique sequence which is not repeated for a long time. It is a 32-bit counter, meaning that the nonce message is kept to the initialized value stored when the AES was disabled. Only the 32-bit LSB of the 128-bit initialization vector register represents the counter. In contrast to CBC mode (which uses the AES_IVRx registers only once when processing the first data block), in counter mode, the AES_IVRx registers are used for processing each data block.

In counter mode, key derivation + decryption mode is not applicable.

Note: The AES_IVRx register has be written only when the AES is disabled (bit EN = 0) to guarantee good AES behavior.

Reading it while AES is enabled returns the value 0x00000000.

Reading it while the AES is disabled returns the latest counter value (useful for managing suspend mode).

In CTR mode, key derivation + decryption serves no purpose. Consequently it is forbidden to set MODE[1:0] = 11 in the AES_CR register and any attempt to set this configuration is forced to MODE[1:0] = 10 (which corresponds to CTR mode decryption). This uses the encryption block of the AES processor to decipher the message as shown in *Figure 153*.

Suspend mode in CTR mode

Like for the CBC mode, it is possible to interrupt a message, sending a higher priority message and resume the message which was interrupted. Refer to the *Figure 151* and *Section 24.5.2* for more details about the suspend mode capability.

24.6 Galois counter mode (GCM)

GCM allows to encrypt and authenticate the plaintext, generating the corresponding ciphertext and the TAG (also known as message authentication code or message integrity check). It is based on AES in counter mode for confidentiality and it uses a multiplier over a fixed finite field for generating the TAG. It requires an initialization vector at the beginning. The message to process can be split in 2 different portions:

- The first that is authenticated only (the header of the message),
- The second that is authenticated and encrypted (the payload).

The header part must precede the payload and the two portions cannot be mixed. GCM standard requires to pass at the end of the message a particular 128-bit block composed by

the size of the header on 64 bits and the size of the payload on 64 bits. During computation we have to distinguish between the blocks of the header and the blocks of the payload.

- Header (aka additional authentication data): data which is authenticated but not protected (such as information for routing the packet)
- Payload (aka plaintext / ciphertext): the message itself which is protected.

In GCM mode the user must follow 4 phases: GCM Init, GCM header, GCM payload, GCM final.

- **GCM init phase:** in this first step, the hash key is calculated and saved internally for use during the processing of all the blocks.
  a) Make sure that the AES core is disabled by clearing EN (AES_CR).
  b) Select GCM chaining mode by programming CHMOD[1:0] = 011 in AES_CR.
  c) Configure GCMPH[1:0] = 00 in AES_CR to indicate GCM init phase and force DATATYPE[1:0] = 00 (No swapping) in AES_CR.
  d) Select mode by selecting either MODE[1:0]= 00 for encryption or MODE[1:0] = 10 for decryption in AES_CR register.
  e) Initialize the key registers (128/256 bits) in AES_KEYRx and IV.
  f) Set EN bit in AES_CR register to 1 to start the calculation of the hash key. EN is automatically reset when the calculation finishes.
  g) Wait until the CCF flag in AES_SR register is set to 1 (or use the corresponding interrupt) before moving on to the next phase.
  h) Erase the CCF flag by setting CCFC in AES_CR.
- **GCM header phase:** To be performed after the GCM init phase.
  i) Set GCMPH=”01” in AES_CR register to indicate that we are in the header phase and configure DATATYPE[1:0] (1-bit, 8-bits, 16-bits or 32-bits) in AES_CR
  j) Enable the AES by setting EN bit in AES_CR register.
  k) Write 4 times the header message into AES_DINR register.
  l) Wait until the computation flag CCF in AES_SR register is set to 1 (or use the corresponding interrupt).
  m) Erase CCF by setting the bit CCFC in AES_CR register.
  n) Repeat (k), (l), and (m) until each of the header blocks is inserted. Alternatively, DMA may be used.

- **GCM payload phase (encryption / decryption):** This step is after GCM_header phase.
  o) Choose the combination 10 of GCMPH in AES_CR register.
  p) Write 4 times the payload message into AES_DINR register.
  q) Wait until the computation flag CCF in AES_SR is set to 1 (or use the corresponding interrupt).
  r) Erase CCF flag by writing 1 in CCFC bit (AES_CR). This must be done before inserting the next block.
  s) Read AES_DOUTR 4 times to get the (ciphertext / plaintext). This is compulsory before starting a new block.

Repeat (p), (q), (r) and (s) until ciphering or deciphering of all the payload blocks. Alternatively, DMA may be used.

- **GCM Final Phase:** In this last step, we generate the authentication tag.
  - t) Choose the combination GCMPH[1:0] = 11 in AES_CR.
  - u) Write 4 times the input into the AES_DINR register: the input must be composed of the length of header coded on 64 bits followed with the length of payload coded on 64 bits.
  - v) Wait until the computation flag CCF in AES_SR register is set to 1 (or use the corresponding interrupt).
  - w) Read 4 times the AES_DOUTR register: the output is the “auth tag”.
  - x) Clear CCF flag in AES_SR register by setting CCFC bit in AES_CR to 1.
  - y) Disable AES processor by setting bit EN in AES_CR to 0.

No need to disable / enable AES processor when moving from header phase to tag phase.

AES can move directly from init to payload or/and to tag (bypassing header phase or/and payload phase) in this case AES enable step should be added after selecting the next phase.

AES Galois message authentication code (GMAC)

The AES processor supports also GMAC to authenticate the plaintext based on GCM algorithm for generating the corresponding TAG.

It is based on a multiplier over a fixed finite field for generating the TAG. It requires an initialization vector at the beginning.

Actually GMAC is the same as GCM applied on a message composed only by the header, so all steps and settings are the same except phase 3 will not be used.

Suspend mode in GCM

In GCM algorithm, suspend mode can be performed during header phase and payload phase. It is advised to not use suspend mode in init phase or tag phase since suspend mode has no benefit in these phases:

Suspend mode during header phase: the user must respect the following steps:

- Before interrupting the current message:
  - a) Make sure that CCF flag read from AES_SR is set to 1.
  - b) Clear CCF flag in AES_SR register by setting CCFC in AES_CR to 1.
  - c) Save AES_SUSPxR registers in the memory.
  - d) Disable AES processor by setting EN in AES_CR to 0.
  - e) Save the current AES configuration in the memory.
- To resume:
  - f) Make sure that AES processor is disabled by reading the bit EN in AES_CR.
  - g) Write back AES_SUSPxR registers into their corresponding suspend registers.
  - h) Re-configure AES with the initial setting values in CR register, IV register and key registers.
  - i) Enable the AES processor by setting EN in AES_CR register.

Suspend mode during Payload phase: the user must respect the following steps:

- Before interrupting the current message:
  - a) Read 4 times the AES_DOUTR register.
  - b) Make sure that busy flag is set to 0 (only in encryption mode, not necessary in decryption mode).
  - c) Save AES_SUSPxR registers in the memory.
  - d) Save AES initialization vector registers AES_IVx in the memory.

Note: AES_IVx registers are modified during payload phase.

  - e) Disable AES processor by setting EN i n AES_CR to 0.
  - f) Save the current AES configuration in the memory (except AES initialization vector values)
- To resume:
  - g) Make sure that AES processor is disabled by reading EN in AES_CR.
  - h) Write back AES_SUSPxR registers into their corresponding suspend registers.
  - i) Write back AES_IVx registers into their AES initialization vectors.
  - j) Re-configure AES with the initial setting values in CR register and key registers.
  - k) Enable the AES processor by setting EN bit in AES_CR register.

Suspend mode in GMAC

GMAC is exactly the same as GCM algorithm except: only Header phase can be interrupt.

24.7 AES cipher message authentication code mode (CMAC)

CMAC allows to authenticate the plaintext, generating the corresponding TAG. The message is composed only by the header phase and the tag phase. The CCM standard (RFC 3610 Counter with CBC-MAC (CCM) dated September 2003) defines particular encoding rules for the first authentication block (called B0 in the standard). In particular, the first block includes flags, a nonce and the payload length expressed in bytes.

  - a) Make sure that the AES processor is disabled by clearing EN (AES_CR) and that AES operating mode is different than mode 2 (key derivation) and mode 4 (key derivation + decryption)
  - b) Select CMAC chaining mode by programming CHMOD bits[2:0] = 100 in AES_CR.
  - c) Initialize key registers (128 / 256 bits) in AES_KEYRx and IV with zero values in AES_IVRx
- **CMAC header phase:**

Note: In this stage, no output is provided in AES_DOUTR register.

d) Set GCMPH=”01” in AES_CR to indicate that we are in the header phase.

e) Enable the AES by setting EN bit in AES_CR.

f) Insert B0 for first transfer, and then B for further transfers.

g) Write 4 times the header message into AES_DINR register.

h) Wait until the computation flag CCF (AES_SR) is set (or use the corresponding interrupt).

i) Erase CCF by setting CCFC in AES_CR.

j) Repeat (g), (h), and (i) until each of the header blocks is inserted. Alternatively, DMA may be used.

- **CMAC Final Phase:** in this last step, we generate the authorization tag.

Note: In this stage, The authorization tag of the message is provided in AES_DOUTR register.

k) Choose the combination GCMPH[1:0] = 11 in AES_CR.

l) Write 4 times the input into the AES_DIN register: the input must be the 128-bit value formatted from the original B0 packet.(i.e bits [7:3] of B0 should be forced to zero value).

m) Wait until computation flag CCF is set in AES_SR.

n) Read 4 times the AES_DOUTR: the output is the “auth tag”.

o) Erase the flag by raising CCFC bit in AES_CR.

p) Disable AES.

Note: 1 The hardware does not manage the formatting operation of the original B0 and B1, the latter having to contain the header length. This task must be handled by software.

2 No need to disable/enable AES processor when moving from header phase to tag phase.

3 The software should filter the Auth Tag output with tag length to obtain the valid TAG.

Suspend mode in CMAC mode

In CMAC algorithm, suspend mode can be performed only during header phase. It is advised to not use suspend mode in tag phase since suspend mode has no benefit in this phase:

To suspend mode CMAC during header phase, the user must respect the following steps:

- Before interrupting the current message:
  a) Make sure that CCF flag in AES_SR is set to 1.
  b) Clear CCF flag in AES_SR register by setting CCFC bit to 1 in AES_CR.
  c) Save AES initialization vector registers AES_IVx and AES_SUSPxR registers in the memory (AES_IVx registers are modified during header phase)
  d) Disable AES processor by setting EN in AES_CR to 0.
  e) Save the current AES configuration values in the memory.
- To resume:
  f) Make sure that AES processor is disabled by reading bit EN in AES_CR.
  g) Write back AES_SUSPxR registers into their corresponding suspend registers.
  h) Write back AES_IVx registers into their AES initialization vector registers
  i) Re-configure AES with the initial setting values in CR register and key registers.
  j) Enable the AES processor by setting EN in AES_CR register.

24.8 Data type

Data are entered in the AES processor 32 bits at a time (words), by writing them in the AES_DINR register. AES handles 128-bit data blocks. The AES_DINR or AES_DOUTR registers must be read or written four times to handle one 128-bit data block with the MSB first.

The system memory organization is little-endian: whatever the data type (bit, byte, 16-bit half-word, 32-bit word) used, the less-significant data occupies the lowest address location.

Thus, there must be a bit, byte, or half-word swapping operation to be performed on data to be written in the AES_DINR from system memory before entering the AES processor, and the same swapping must be performed for AES data to be read from the AES_DOUTR register to the system memory, depending on to the kind of data to be encrypted or decrypted.

The DATATYPE bits in the AES_CR register offer different swap modes to be applied to the AES_DINR register before sending it to the AES processor and to be applied on the AES_DOUTR register on the data coming out from the processor (refer to *Figure 155*).

Note: The swapping operation concerns only the AES_DOUTR and AES_DINR registers. The AES_KEYRx and AES_IVRx registers are not sensitive to the swap mode selected. They have a fixed little-endian configuration (refer to Section 24.4 and Section 24.14).

Figure 155. 128-bit block construction according to the data type

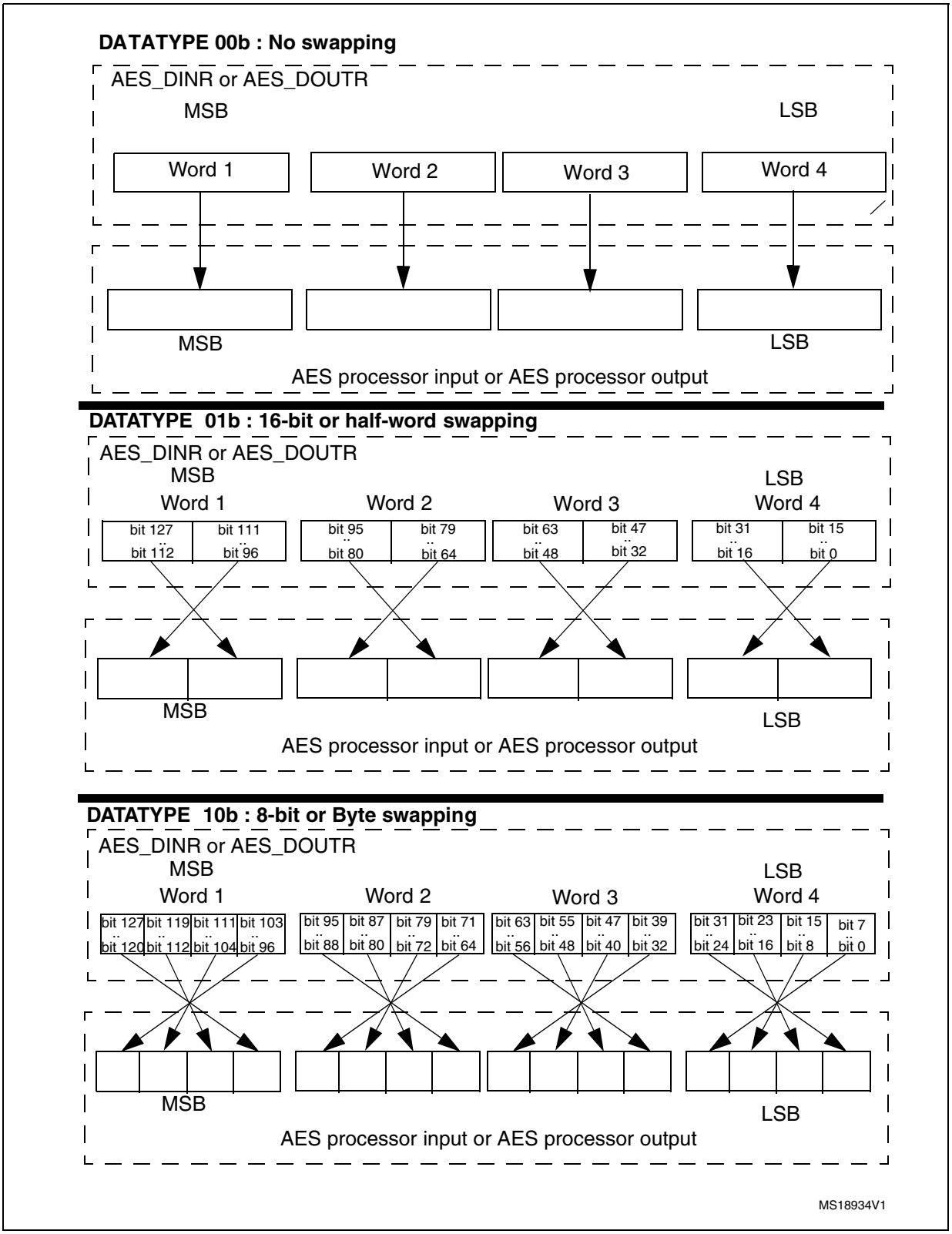

Figure 156. 128-bit block construction according to the data type (continued)

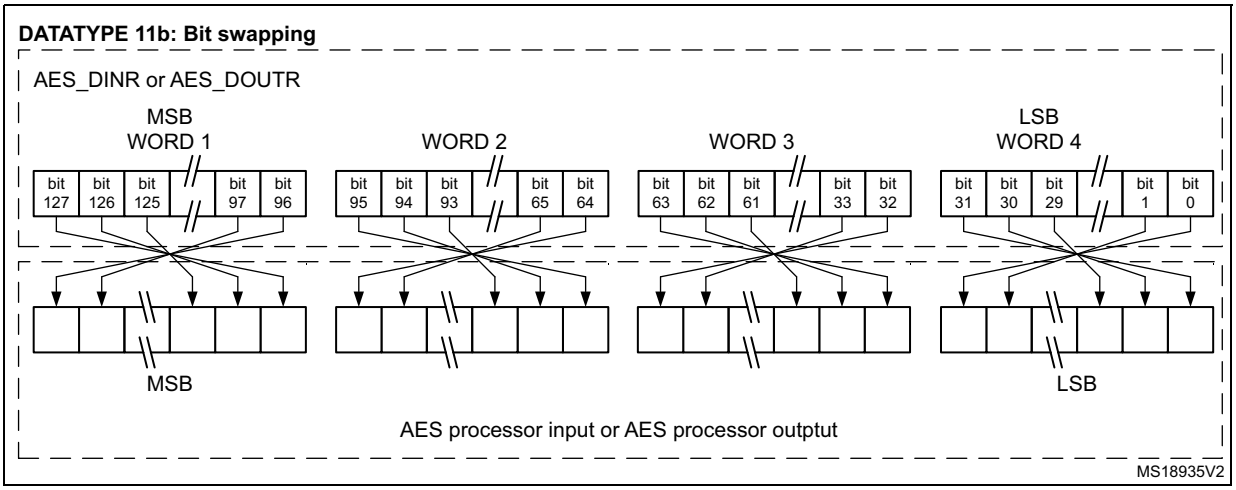

24.9 Operating modes

24.9.1 Mode 1: encryption

1. Disable the AES by resetting EN bit in the AES_CR register.
2. Configure the mode 1 by programming MODE[1:0] = 00 in the AES_CR register and select which type of chaining mode needs to be performed by programming the CHMOD[2:0] bits.
3. Select key length 128-bits or 256-bits via KEYSIZE bits configuration in AES_CR register.
4. Write the AES_KEYRx registers (128-bit or 256-bit with encryption key) and the AES_IVRx registers if CTR, CBC or GCM mode is selected. For ECB mode, the AES_IVRx register is not used.
5. Enable the AES by setting the EN bit in the AES_CR register.
6. Write the AES_DINR register 4 times to input the plain text (MSB first) as shown in *Figure 157: Mode 1: encryption with 128-bit key length*.
7. Wait until the CCF flag is set in the AES_SR register.
8. Read the AES_DOUTR register 4 times to get the cipher text (MSB first) as shown in *Figure 157: Mode 1: encryption with 128-bit key length*.
9. Repeat steps 6,7,8 to process all the blocks with the same encryption key.

Figure 157. Mode 1: encryption with 128-bit key length

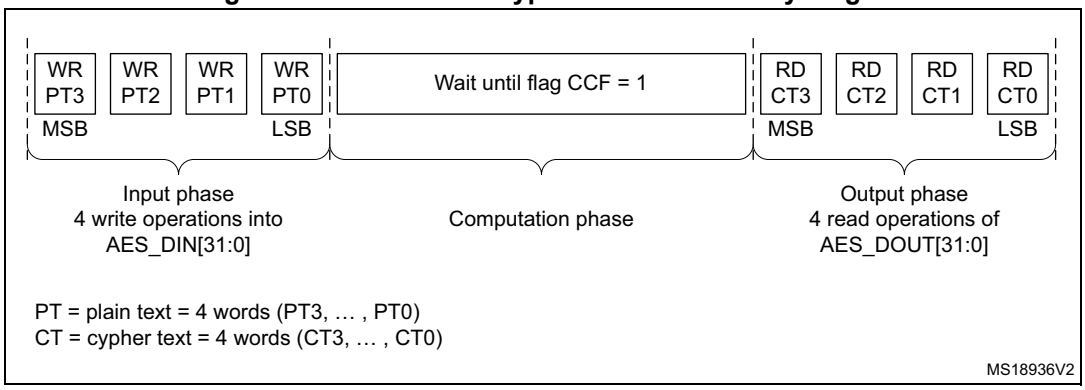

24.9.2 Mode 2: key derivation

1. Disable the AES by resetting the EN bit in the AES_CR register.
2. Configure mode 2 by programming MODE[1:0] = 01 in the AES_CR register.

Note: CHMOD[2:0] bits are not significant in this case because this key derivation mode is independent from the chaining algorithm selected.

3. Select key length 128-bit or 256-bit via KEYSIZE bits configuration in AES_CR register.
4. Write the AES_KEYRx registers with the encryption key to obtain the derivative key. A write to the AES_IVRx has no effect.
5. Enable the AES by setting the EN bit in the AES_CR register.
6. Wait until the CCF flag is set in the AES_SR register.
7. The derivation key is put automatically into the AES_KEYRx registers. Read the AES_KEYRx registers to obtain the decryption key if needed. The AES is disabled by hardware. To restart a derivation key calculation, repeat steps 3, 4, 5 and 6.

Figure 158. Mode 2: key derivation with 128-bit key length

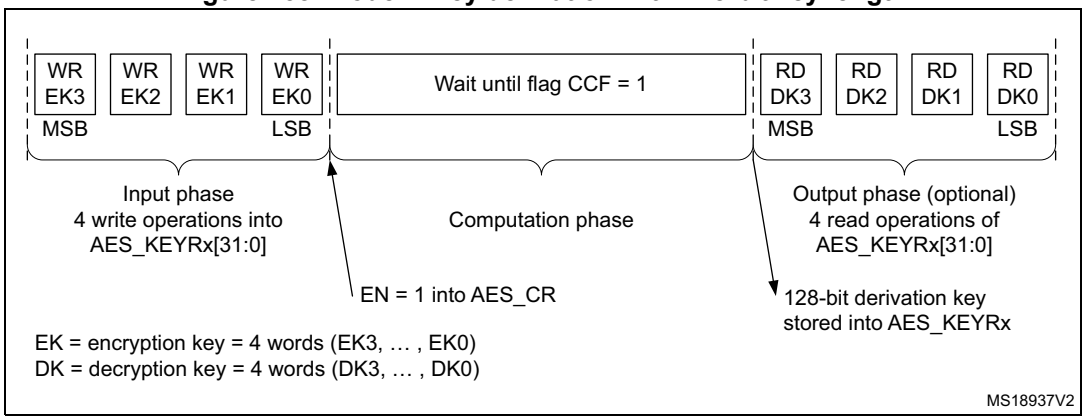

24.9.3 Mode 3: decryption

1. Disable the AES by resetting the EN bit in the AES_CR register.
2. Configure mode 3 by programming MODE[1:0] = 10 in the AES_CR register and select which type of chaining mode needs to be performed by programming the CHMOD[2:0] bits.
3. Select Key length 128-bit or 256-bit via KEYSIZE bits configuration in AES_CR register.
4. Write the AES_KEYRx registers with the decryption key (this step can be bypassed if the derivation key is already stored in the AES_KEYRx registers using mode 2: key derivation). Write the AES_IVRx registers if CTR, CBC or GCM mode is selected. For ECB mode, the AES_IVRx registers are not used.
5. Enable the AES by setting the EN bit in the AES_CR register.
6. Write the AES_DINR register 4 times to input the cipher text (MSB first) as shown in *Figure 159: Mode 3: decryption with 128-bit key length*.
7. Wait until the CCF flag is set in the AES_SR register.
8. Read the AES_DOUTR register 4 times to get the plain text (MSB first) as shown in *Figure 159: Mode 3: decryption with 128-bit key length*.
9. Repeat steps 6, 7, 8 to process all the blocks using the same derivation key stored in the AES_KEYRx registers.

Figure 159. Mode 3: decryption with 128-bit key length

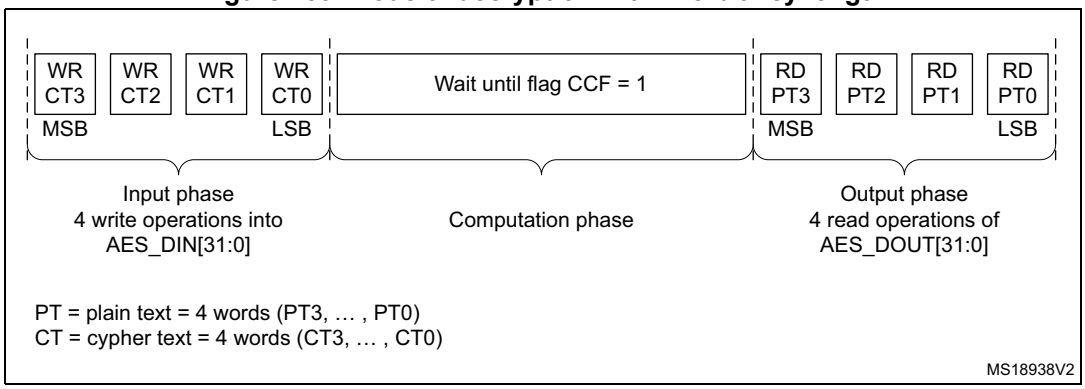

24.9.4 Mode 4: key derivation and decryption

1. Disable the AES by resetting the EN bit in the AES_CR register.
2. Configure mode 4 by programming MODE[1:0] = 11 in the AES_CR register. This mode is forbidden when AES is configured in CTR, GCM, GMAC or CMAC mode. It will be

forced to CTR decryption mode if the software writes MODE[1:0] = 11 and CHMOD[2:0] = 010.

3. Select key length 128-bit or 256-bit via KEYSIZE bits configuration in AES_CR register.
4. Write the AES_KEYRx register with the encryption key. Write the AES_IVRx register if the CBC mode is selected.
5. Enable the AES by setting the EN bit in the AES_CR register.
6. Write the AES_DINR register 4 times to input the cipher text (MSB first) as shown in *Figure 160: Mode 4: key derivation and decryption with 128-bit key length*.
7. Wait until the CCF flag is set in the AES_SR register.
8. Read the AES_DOUTR register 4 times to get the plain text (MSB first) as shown in *Figure 160: Mode 4: key derivation and decryption with 128-bit key length*.
9. Repeat steps 6, 7, 8 to process all the blocks with the same encryption key.

Note: The AES_KEYRx registers contain the encryption key during all phases of the processing, No derivation key is stored in these registers. The derivation key starting from the encryption key is stored internally in the AES without storing a copy in the AES_KEYRx registers.

Figure 160. Mode 4: key derivation and decryption with 128-bit key length

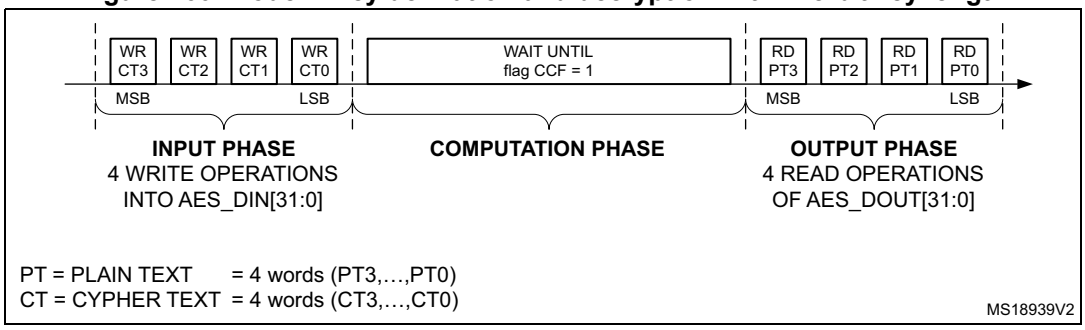

24.10 AES DMA interface

The AES accelerator provides an interface to connect to the DMA controller.

The DMA must be configured to transfer words.

The AES can be associated with two distinct DMA request channels:

- A DMA request channel for the inputs: When the DMAINEN bit is set in the AES_CR register, the AES initiates a DMA request (AES_IN) during the INPUT phase each time it requires a word to be written to the AES_DINR register. The DMA channel must be configured in memory-to-peripheral mode with 32-bit data size.
- A DMA request channel for the outputs: When the DMAOUTEN bit is enabled, the AES initiates a DMA request (AES_OUT) during the OUTPUT phase each time it requires a word to be read from the AES_DOUTR register. The DMA channel must be configured in peripheral-to-memory mode with a data size equal to 32-bit.

Four DMA requests are asserted for each phase, these are described in *Figure 161* and *Figure 162*.

DMA requests are generated until the AES is disabled. So, after the data output phase at the end of processing a 128-bit data block, the AES switches automatically to a new data input phase for the next data block if any.

Note: 1 For mode 2 (key derivation), access to the AES_KEYRx registers can be done by software using the CPU. No DMA channel is provided for this purpose. Consequently, the DMAINEN bit and DMAOUTEN bits in the AES_CR register have no effect during this mode.

2 The CCF flag is not relevant when DMAOUTEN = 1 and software does not need to read it in this case. This bit may stay high and has to be cleared by software if the application needs to disable the AES to cancel the DMA management and use CPU access for the data input or data output phase.

Figure 161. DMA requests and data transfers during Input phase (AES_IN)

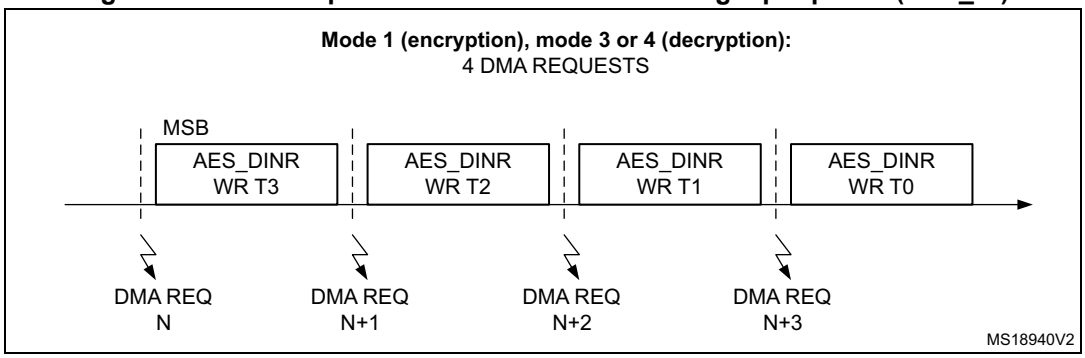

Figure 162. DMA requests during Output phase (AES_OUT)

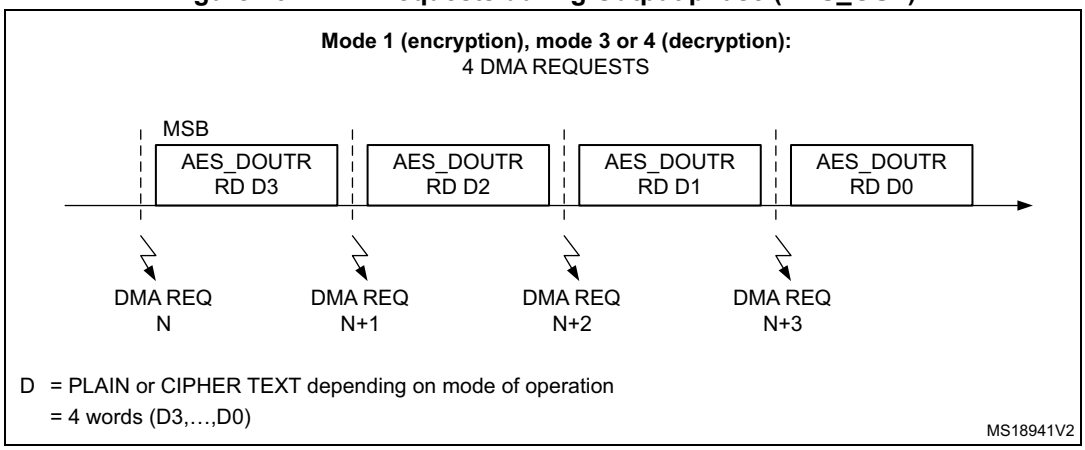

24.11 Error flags

The AES read error flag (RDERR) in the AES_SR register is set when an unexpected read operation is detected during the computation phase or during the input phase.

The AES write error flag (WRERR) in the AES_SR register is set when an unexpected write operation is detected during the output phase or during the computation phase.

The flags may be cleared setting the respective bit in the AES_CR register (CCFC bit to clear the CCF flag, ERRC bit to clear the WERR and RDERR flags).

An interrupt can be generated when one of the error flags (WERR or RDERR) is set if the error interrupt enable (ERRIE) bit in the AES_CR register has been previously set.

If an error is detected, AES is not disabled by hardware and continues processing as normal.

24.12 Processing time

The following tables summarize the time required to process a 128-bit block for each mode of operation.

Table 104. Processing time (in clock cycle)

Mode of operation	Input phase	Computation phase	Output phase	Total
Mode 1: Encryption	8	202	4	214
Mode 2: Key derivation	-	80	-	80
Mode 3: Decryption	8	202	4	214
Mode 4: Key derivation + decryption	8	276	4	288

Table 105. Processing time (in clock cycle) for ECB, CBC and CTR

Key size	Mode of operation	Algorithm	Input phase	Computation phase	Output phase	Total
128-bit	Mode 1: Encryption	ECB, CBC, CTR	8	202	4	214
	Mode 2: Key derivation	-	-	80	-	80
	Mode 3: Decryption	ECB, CBC, CTR	8	202	4	214
	Mode 4: Key derivation + decryption	ECB, CBC	8	276	4	288
256-bit	Mode 1: Encryption	ECB, CBC, CTR	8	286	4	298
	Mode 2: Key derivation	-	-	109	-	109
	Mode 3: Decryption	ECB, CBC, CTR	8	286	4	298
	Mode 4: Key derivation + decryption	ECB, CBC	8	380	4	392

Table 106. Processing time (in clock cycle) for GCM and CMAC

Key size	Mode of operation	Algorithm	Init Phase	Header phase	Payload phase	Tag phase
128-bit	Mode 1: Encryption/ Mode 3: Decryption	GCM	215	67	202	202
	-	GMAC	215	67	-	202
	-	CMAC	-	206	-	202
256-bit	Mode 1: Encryption/ Mode 3: Decryption	GCM	299	67	286	286
	-	GMAC	299	67	-	286
	-	CMAC	-	290	-	286

Note: Mode 2 and mode 4 has no meaning when GCM is selected.

Mode operation (mode 1 to mode 4) has no meaning when GMAC/CMAC is used.

24.13 AES interrupts

Table 107. AES interrupt requests

Interrupt event	Event flag	Enable control bit	Exit from Wait
AES computation completed flag	CCF	CCFIE	yes
AES read error flag	RDERR	ERRIE	yes
AES write error flag	WRERR	ERRIE	yes

24.14 AES registers

24.14.1 AES control register (AES_CR)

Address offset: 0x00

Reset value: 0x0000 0000

31	30	29	28	27	26	25	24	23	22	21	20	19	18	17	16
Res.	Res.	Res.	Res.	Res.	Res.	Res.	Res.	Res.	Res.	Res.	Res.	Res.	KEY SIZE	Res.	CH MOD [2]
													rw		rw

15	14	13	12	11	10	9	8	7	6	5	4	3	2	1	0
Res.	GCMPH[1:0]		DMA OUT EN	DMA INEN	ERRIE	CCFIE	ERRC	CCFC	CHMOD[1:0]		MODE[1:0]		DATATYPE[1:0]		EN
	rw	rw	rw	rw	rw	rw	rw	rw	rw	rw	rw	rw	rw	rw	rw

Bits 31:19 Reserved, must be kept at reset value.

Bit 18 **KEYSIZE:** Key size selection

0: 128 bit key length

1: 256 bit key length

The operation mode must only be changed if the AES is disabled. Writing these bits while the AES is enabled is forbidden in order to avoid unpredictable AES behavior.

Bits 17, 15 Reserved, must be kept at reset value.

Bits 14:13 **GCMPH[1:0]:** Used only for GCM, GMAC and CMAC algorithms and has no effect when other algorithms are selected

00: GCM init Phase

01: GCM header phase

10: GCM payload phase

11: GCM final phase

Note: GCM init phase and GCM payload phase must not be used when CMAC is selected, else AES peripheral behavior is not guaranteed.

Bit 12 **DMAOUTEN:** Enable DMA management of data output phase

0: DMA (during data output phase) disabled

1: DMA (during data output phase) enabled

If the DMAOUTEN bit is set, DMA requests are generated for the output data phase in mode 1, 3 or 4. This bit has no effect in mode 2 (key derivation).

Bit 11 **DMAINEN:** Enable DMA management of data input phase

0: DMA (during data input phase) disabled

1: DMA (during data input phase) enabled

If the DMAINEN bit is set, DMA requests are generated for the data input phase in mode 1, 3 or 4. This bit has no action in mode 2 (key derivation).

Bit 10 **ERRIE**: Error interrupt enable

An interrupt is generated if at least one of the both flags RDERR or WRERR is set.

0: Error interrupt disabled

1: Error interrupt enabled

Bit 9 **CCFIE**: CCF flag interrupt enable

An interrupt is generated if the CCF flag is set.

0: CCF interrupt disabled

1: CCF interrupt enabled

Bit 8 **ERRC**: Error clear

Writing 1 to this bit clears the RDERR and WRERR flags.

This bit is always read low.

Bit 7 **CCFC**: Computation complete flag clear

Writing 1 to this bit clears the CCF flag.

This bit is always read low.

Bit 16 and Bits 6:5 **CHMOD[2:0]**: AES chaining mode

000: Electronic codebook (ECB)

001: Cipher block chaining (CBC)

010: Counter mode (CTR)

011: Galois counter mode (GCM) and Galois message authentication code (GMAC)

100: Cipher message authentication code (CMAC)

The AES chaining mode must only be changed while the AES is disabled. Writing these bits while the AES is enabled is forbidden in order to avoid unpredictable AES behavior.

Bits 4:3 **MODE[1:0]**: AES operating mode

00: Mode 1: Encryption

01: Mode 2: Key derivation

10: Mode 3: Decryption

11: Mode 4: Key derivation + decryption

The operation mode must only be changed if the AES is disabled. Writing these bits while the AES is enabled is forbidden in order to avoid unpredictable AES behavior.

Mode 4 is forbidden if CTR mode/GCM mode is selected. It will be forced to mode 3 if the software, nevertheless, attempts to set mode 4 for this CTR/GCM mode configuration.

Bits 2:1 **DATATYPE[1:0]**: Data type selection (for data in and data out to/from the cryptographic block)

00: 32-bit data. No swapping.

01: 16-bit data or half-word. In the word, each half-word is swapped. For example, if one of the four 32-bit data written in the AES_DINR register is 0x764356AB, the value given to the cryptographic block is 0x56AB7643

10: 8-bit data or bytes. In the word, all the bytes are swapped. For example, if one of the four 32-bit data written in the AES_DINR register is 0x764356AB, the value given to the cryptographic block is 0xAB564376.

11: Bit data. In the word all the bits are swapped. For example, if one of the four 32-bit data written in the AES_DINR register is 0x764356AB, the value given to the cryptographic block is 0xD56AC26E

The DATATYPE selection must be changed if the AES is disabled. Writing these bits while the AES is enabled is forbidden to avoid unpredictable AES behavior.

Bit 0 **EN**: AES enable

0: AES disable

1: AES enable

The AES can be re-initialized at any moment by resetting this bit: the AES is then ready to start processing a new block when EN is set.

This bit is cleared by hardware when the AES computation is finished in mode 2 (key derivation)

24.14.2 AES status register (AES_SR)

Address offset: 0x04

Reset value: 0x0000 0000

31	30	29	28	27	26	25	24	23	22	21	20	19	18	17	16
Res.	Res.	Res.	Res.	Res.	Res.	Res.	Res.	Res.	Res.	Res.	Res.	Res.	Res.	Res.	Res.
15	14	13	12	11	10	9	8	7	6	5	4	3	2	1	0
Res.	Res.	Res.	Res.	Res.	Res.	Res.	Res.	Res.	Res.	Res.	Res.	BUSY	WRERR	RDERR	CCF
												r	r	r	r

Bits 31:4 Reserved, must be kept at reset value.

Bit 3 **Busy**: Busy flag

This bit is set and reset by hardware to indicate that higher priority message can interrupt the current message during GCM payload phase for encryption mode only

0: GCM suspend mode can perform

1: GCM suspend mode cannot perform

Note: This bit has effect only when GCM algorithm is selected.

Note: This flag has no effect when GCM is configured in GCM init phase, GCM header phase, GCM payload phase (decryption mode) and GCM final phase.

Bit 2 **WRERR**: Write error flag

This bit is set by hardware when an unexpected write operation to the AES_DINR register is detected (during computation or data output phase). An interrupt is generated if the ERRIE bit has been previously set in the AES_CR register. This flag has no impact on the AES which continues running even if WERR is set.

It is cleared by software by setting the ERRC bit in the AES_CR register.

0: No write error detected

1: Write error detected

Note: This Flags has no meaning when:

- *Key derivation mode is selected*
- *GCM init phase*

Bit 1 **RDERR**: Read error flag

This bit is set by hardware when an unexpected read operation from the AES_DOUTR register is detected (during computation or data input phase). An interrupt is generated if the ERRIE bit has been previously set in the AES_CR register.This flag has no impact on the AES which continues running even if RDERR is set.

It is cleared by software by setting the ERRC bit i in the AES_CR register.

0: No read error detected

1: Read error detected

Note: This Flags has no meaning when:

- *Key derivation mode is selected*
- *GCM init phase is selected*
- *GMAC or CMAC header phase is selected*

Bit 0 **CCF**: Computation complete flag

This bit is set by hardware when the computation is complete. An interrupt is generated if the CCFIE bit has been previously set in the AES_CR register.

It is cleared by software by setting the CCFC bit in the AES_CR register.

0: Computation is not complete

1: Computation complete

Note: This bit is significant only when DMAOUTEN = 0. It may stay high when DMA_EN = 1.

24.14.3 AES data input register (AES_DINR)

Address offset: 0x08

Reset value: 0x0000 0000

31	30	29	28	27	26	25	24	23	22	21	20	19	18	17	16
DINR[31:16]															
rw	rw	rw	rw	rw	rw	rw	rw	rw	rw	rw	rw	rw	rw	rw	rw
15	14	13	12	11	10	9	8	7	6	5	4	3	2	1	0
DINR[15:0]															
rw	rw	rw	rw	rw	rw	rw	rw	rw	rw	rw	rw	rw	rw	rw	rw

Bits 31:0 **DINR[31:0]**: Data input register

This register must be written 4 times during the input phase:

– In mode 1 (encryption), 4 words must be written which represent the plain text from MSB to LSB.

– In mode 2 (key derivation), This register is not used because this mode concerns only derivative key calculation starting from the AES_KEYRx register.

– In mode 3 (decryption) and 4 (Key derivation + decryption), 4 words must be written which represent the cipher text MSB to LSB.

Note: This register must be accessed with 32-bit data width.

24.14.4 AES data output register (AES_DOUTR)

Address offset: 0x0C

Reset value: 0x0000 0000

31	30	29	28	27	26	25	24	23	22	21	20	19	18	17	16
DOUTR[31:16]															
r	r	r	r	r	r	r	r	r	r	r	r	r	r	r	r
15	14	13	12	11	10	9	8	7	6	5	4	3	2	1	0
DOUTR[15:0]															
r	r	r	r	r	r	r	r	r	r	r	r	r	r	r	r

Bits 31:0 **DOUTR[31:0]**: Data output register

This register is read only.

Once the CCF flag (computation complete flag) is set, reading this data register 4 times gives access to the 128-bit output results:

– In mode 1 (encryption), the 4 words read represent the cipher text from MSB to LSB.

– In mode 2 (key derivation), there is no need to read this register because the derivative key is located in the AES_KEYRx registers.

– In mode 3 (decryption) and mode 4 (key derivation + decryption), the 4 words read represent the plain text from MSB to LSB.

Note: This register must be accessed with 32-bit data width.

24.14.5 AES key register 0 (AES_KEYR0) (LSB: key [31:0])

Address offset: 0x10

Reset value: 0x0000 0000

31	30	29	28	27	26	25	24	23	22	21	20	19	18	17	16
KEYR0[31:16]															
rw	rw	rw	rw	rw	rw	rw	rw	rw	rw	rw	rw	rw	rw	rw	rw
15	14	13	12	11	10	9	8	7	6	5	4	3	2	1	0
KEYR0[15:0]															
rw	rw	rw	rw	rw	rw	rw	rw	rw	rw	rw	rw	rw	rw	rw	rw

Bits 31:0 **KEYR0[31:0]**: Data output register (LSB key [31:0])

This register must be written before the EN bit in the AES_CR register is set:

In mode 1 (encryption), mode 2 (key derivation) and mode 4 (key derivation + decryption), the value to be written represents the encryption key from LSB, meaning key [31:0].

In mode 3 (decryption), the value to be written represents the decryption key from LSB, meaning key [31:0]. When the register is written with the encryption key in this decryption mode, reading it before the AES is enabled will return the encryption value. Reading it after CCF flag is set will return the derivation key.

Reading this register while AES is enabled returns an unpredictable value.

Note: This register does not contain the derivation key in mode 4 (derivation key + decryption). It always contains the encryption key value.

24.14.6 AES key register 1 (AES_KEYR1) (key[63:32])

Address offset: 0x14

Reset value: 0x0000 0000

31	30	29	28	27	26	25	24	23	22	21	20	19	18	17	16
KEYR1[31:16]															
rw	rw	rw	rw	rw	rw	rw	rw	rw	rw	rw	rw	rw	rw	rw	rw
15	14	13	12	11	10	9	8	7	6	5	4	3	2	1	0
KEYR1[15:0]															
rw	rw	rw	rw	rw	rw	rw	rw	rw	rw	rw	rw	rw	rw	rw	rw

Bits 31:0 **KEYR1[31:0]**: Data output register (key [63:32])

Refer to the description of AES_KEYR0.

24.14.7 AES key register 2 (AES_KEYR2) (key [95:64])

Address offset: 0x18

Reset value: 0x0000 0000

31	30	29	28	27	26	25	24	23	22	21	20	19	18	17	16
KEYR2[31:16]															
rw	rw	rw	rw	rw	rw	rw	rw	rw	rw	rw	rw	rw	rw	rw	rw
15	14	13	12	11	10	9	8	7	6	5	4	3	2	1	0
KEYR2[15:0]															
rw	rw	rw	rw	rw	rw	rw	rw	rw	rw	rw	rw	rw	rw	rw	rw

Bits 31:0 **KEYR2[31:0]**: Data output register (key [95:64])
Refer to the description of AES_KEYR0.

24.14.8 AES key register 3 (AES_KEYR3) (MSB: key[127:96])

Address offset: 0x1C

Reset value: 0x0000 0000

31	30	29	28	27	26	25	24	23	22	21	20	19	18	17	16
KEYR3[31:16]															
rw	rw	rw	rw	rw	rw	rw	rw	rw	rw	rw	rw	rw	rw	rw	rw
15	14	13	12	11	10	9	8	7	6	5	4	3	2	1	0
KEYR3[15:0]															
rw	rw	rw	rw	rw	rw	rw	rw	rw	rw	rw	rw	rw	rw	rw	rw

Bits 31:0 **KEYR3[31:0]**: Data output register (MSB key [127:96])
Refer to the description of AES_KEYR0.

24.14.9 AES initialization vector register 0 (AES_IVR0) (LSB: IVR[31:0])

Address offset: 0x20

Reset value: 0x0000 0000

31	30	29	28	27	26	25	24	23	22	21	20	19	18	17	16
IVR0[31:16]															
rw	rw	rw	rw	rw	rw	rw	rw	rw	rw	rw	rw	rw	rw	rw	rw
15	14	13	12	11	10	9	8	7	6	5	4	3	2	1	0
IVR0[15:0]															
rw	rw	rw	rw	rw	rw	rw	rw	rw	rw	rw	rw	rw	rw	rw	rw

Bits 31:0 **IVR0[31:0]**: initialization vector register (LSB IVR[31:0])

This register must be written before the EN bit in the AES_CR register is set:

The register value has no meaning if:

– The ECB mode (electronic codebook) is selected.

– The CTR or CBC mode is selected in addition with the key derivation.

In CTR mode (counter mode), this register contains the 32-bit counter value.

Reading this register while AES is enabled will return the value 0x00000000.

24.14.10 AES initialization vector register 1 (AES_IVR1) (IVR[63:32])

Address offset: 0x24

Reset value: 0x0000 0000

31	30	29	28	27	26	25	24	23	22	21	20	19	18	17	16
IVR1[31:16]															
rw	rw	rw	rw	rw	rw	rw	rw	rw	rw	rw	rw	rw	rw	rw	rw
15	14	13	12	11	10	9	8	7	6	5	4	3	2	1	0
IVR1[15:0]															
rw	rw	rw	rw	rw	rw	rw	rw	rw	rw	rw	rw	rw	rw	rw	rw

Bits 31:0 **IVR1[31:0]**: Initialization vector register (IVR[63:32])

This register must be written before the EN bit in the AES_CR register is set:

The register value has no meaning if:

– The ECB mode (electronic codebook) is selected.

– The CTR or CBC mode is selected in addition with the key derivation or key derivation + decryption mode.

In CTR mode (counter mode), this register contains the nonce value.

Reading this register while AES is enabled will return the value 0x00000000.

24.14.11 AES initialization vector register 2 (AES_IVR2) (IVR[95:64])

Address offset: 0x28

Reset value: 0x0000 0000

31	30	29	28	27	26	25	24	23	22	21	20	19	18	17	16
IVR2[31:16]															
rw	rw	rw	rw	rw	rw	rw	rw	rw	rw	rw	rw	rw	rw	rw	rw
15	14	13	12	11	10	9	8	7	6	5	4	3	2	1	0
IVR2[15:0]															
rw	rw	rw	rw	rw	rw	rw	rw	rw	rw	rw	rw	rw	rw	rw	rw

Bits 31:0 **IVR2[31:0]**: Initialization vector register (IVR[95:64])

This register must be written before the EN bit in the AES_CR register is set:

The register value has no meaning if:

– The ECB mode (electronic codebook) is selected.

– The CTR or CBC mode is selected in addition with the key derivation or key derivation + decryption mode.

In CTR mode (counter mode), this register contains the nonce value.

Reading this register while AES is enabled will return the value 0x00000000.

24.14.12 AES initialization vector register 3 (AES_IVR3) (MSB: IVR[127:96])

Address offset: 0x2C

Reset value: 0x0000 0000

31	30	29	28	27	26	25	24	23	22	21	20	19	18	17	16
IVR3[31:16]															
rw	rw	rw	rw	rw	rw	rw	rw	rw	rw	rw	rw	rw	rw	rw	rw
15	14	13	12	11	10	9	8	7	6	5	4	3	2	1	0
IVR3[15:0]															
rw	rw	rw	rw	rw	rw	rw	rw	rw	rw	rw	rw	rw	rw	rw	rw

Bits 31:0 **IVR3[31:0]**: Initialization vector register (MSB IVR[127:96])

This register must be written before the EN bit in the AES_CR register is set:

The register value has no meaning if:

– The ECB mode (electronic codebook) is selected.

– The CTR or CBC mode is selected in addition with the key derivation or key derivation + decryption mode.

In CTR mode (counter mode), this register contains the nonce value.

Reading this register while AES is enabled will return the value 0x00000000.

24.14.13 AES key register 4 (AES_KEYR4) (key[159:128])

Address offset: 0x30

Reset value: 0x0000 0000

31	30	29	28	27	26	25	24	23	22	21	20	19	18	17	16
KEYR431:16]															
rw	rw	rw	rw	rw	rw	rw	rw	rw	rw	rw	rw	rw	rw	rw	rw
15	14	13	12	11	10	9	8	7	6	5	4	3	2	1	0
KEYR4[15:0]															
rw	rw	rw	rw	rw	rw	rw	rw	rw	rw	rw	rw	rw	rw	rw	rw

Bits 31:0 **KEYR4[31:0]**: Data output register (key [159:128])
Same description as AES_KEYR0 for the key[159:128].

24.14.14 AES key register 5 (AES_KEYR5) (key[191:160])

Address offset: 0x34

Reset value: 0x0000 0000

31	30	29	28	27	26	25	24	23	22	21	20	19	18	17	16
KEYR5[31:16]															
rw	rw	rw	rw	rw	rw	rw	rw	rw	rw	rw	rw	rw	rw	rw	rw
15	14	13	12	11	10	9	8	7	6	5	4	3	2	1	0
KEYR5[15:0]															
rw	rw	rw	rw	rw	rw	rw	rw	rw	rw	rw	rw	rw	rw	rw	rw

Bits 31:0 **KEYR5[31:0]**: Data output register (key [191:160])
Same description as AES_KEYR0 for the key[191:160].

24.14.15 AES key register 6 (AES_KEYR6) (key[223:192])

Address offset: 0x38

Reset value: 0x0000 0000

31	30	29	28	27	26	25	24	23	22	21	20	19	18	17	16
KEYR631:16]															
rw	rw	rw	rw	rw	rw	rw	rw	rw	rw	rw	rw	rw	rw	rw	rw
15	14	13	12	11	10	9	8	7	6	5	4	3	2	1	0
KEYR615:0]															
rw	rw	rw	rw	rw	rw	rw	rw	rw	rw	rw	rw	rw	rw	rw	rw

Bits 31:0 **KEYR6[31:0]**: Data output register (key [223:192])
Same description as AES_KEYR0 for the key[223:192].

24.14.16 AES key register 7 (AES_KEYR7) (MSB: key[255:224])

Address offset: 0x3C

Reset value: 0x0000 0000

31	30	29	28	27	26	25	24	23	22	21	20	19	18	17	16
KEYR731:16]															
rw	rw	rw	rw	rw	rw	rw	rw	rw	rw	rw	rw	rw	rw	rw	rw
15	14	13	12	11	10	9	8	7	6	5	4	3	2	1	0
KEYR7[15:0]															
rw	rw	rw	rw	rw	rw	rw	rw	rw	rw	rw	rw	rw	rw	rw	rw

Bits 31:0 **KEYR7[31:0]**: Data output register (MSB key [255:224])
Same description as AES_KEYR0 for the key[255:224].

Note: The key registers from 4 to 7 are used only when 256-bit key length is selected. These registers have no effect when 128-bit key length is selected (only key registers from 0 to 3 are used).

24.14.17 AES Suspend registers (AES_SUSPxR) (x = 0..7)

Address offset: 0x040 (AES_SUSP0R) to 0x05C (AES_SUSP7R)

Reset value: 0x0000 0000

These registers contain the complete internal register states of the AES processor when the GCM/GMAC is selected, and are useful when a suspend has to be done because a high-priority task has to use the AES processor while it is already in use by another task.

When such an event occurs, the AES_SUSP0..7R registers (when GCM/GMAC is selected) have to be read and the read values have to be saved somewhere in the memory space. Then the AES processor can be used by the preemptive task, and when AES computation is finished, the saved context can be read from memory and written back into their corresponding suspend registers.

Note: 1 These registers are used only when GCM/GMAC algorithm mode is selected.

2 These registers can only be read when AES is enabled (Bit [0] set to 1 in AES_CR register), else reading these registers while AES is disabled will return the value 0x00000000.

31	30	29	28	27	26	25	24	23	22	21	20	19	18	17	16
AES_SUSPxR															
rw	rw	rw	rw	rw	rw	rw	rw	rw	rw	rw	rw	rw	rw	rw	rw
15	14	13	12	11	10	9	8	7	6	5	4	3	2	1	0
AES_SUSPxR															
rw	rw	rw	rw	rw	rw	rw	rw	rw	rw	rw	rw	rw	rw	rw	rw

24.14.18 AES register map

Table 108. AES register map

Offset	Register	31	30	29	28	27	26	25	24	23	22	21	20	19	18	17	16	15	14	13	12	11	10	9	8	7	6	5	4	3	2	1	0
0x0000	**AES_CR**	Res.	Res.	Res.	Res.	Res.	Res.	Res.	Res.	Res.	Res.	Res.	Res.	Res.	KEYSIZE	Res.	CHMOD[2]	Res.	GCMPH[1:0]		DMAOUTEN	DMAINEN	ERRIE	CCFIE	ERRC	CCFC	CHMOD[1:0]		MODE[1:0]		DATATYPE[1:0]		EN
	Reset value														0		0		0	0	0	0	0	0	0	0	0	0	0	0	0	0	0
0x0004	**AES_SR**	Res.	Res.	Res.	Res.	Res.	Res.	Res.	Res.	Res.	Res.	Res.	Res.	Res.	Res.	Res.	Res.	Res.	Res.	Res.	Res.	Res.	Res.	Res.	Res.	Res.	Res.	Res.	Res.	BUSY	WRERR	RDERR	CCF
	Reset value																													0	0	0	0
0x0008	**AES_DINR**	AES_DINR[31:0]																															
	Reset value	0	0	0	0	0	0	0	0	0	0	0	0	0	0	0	0	0	0	0	0	0	0	0	0	0	0	0	0	0	0	0	0
0x000C	**AES_DOUTR**	AES_DOUTR[31:0]																															
	Reset value	0	0	0	0	0	0	0	0	0	0	0	0	0	0	0	0	0	0	0	0	0	0	0	0	0	0	0	0	0	0	0	0
0x0010	**AES_KEYR0**	AES_KEYR0[31:0]																															
	Reset value	0	0	0	0	0	0	0	0	0	0	0	0	0	0	0	0	0	0	0	0	0	0	0	0	0	0	0	0	0	0	0	0
0x0014	**AES_KEYR1**	AES_KEYR1[31:0]																															
	Reset value	0	0	0	0	0	0	0	0	0	0	0	0	0	0	0	0	0	0	0	0	0	0	0	0	0	0	0	0	0	0	0	0
0x0018	**AES_KEYR2**	AES_KEYR2[31:0]																															
	Reset value	0	0	0	0	0	0	0	0	0	0	0	0	0	0	0	0	0	0	0	0	0	0	0	0	0	0	0	0	0	0	0	0

Table 108. AES register map

Offset	Register	31	30	29	28	27	26	25	24	23	22	21	20	19	18	17	16	15	14	13	12	11	10	9	8	7	6	5	4	3	2	1	0
0x001C	**AES_KEYR3**	AES_KEYR3[31:0]																															
	Reset value	0	0	0	0	0	0	0	0	0	0	0	0	0	0	0	0	0	0	0	0	0	0	0	0	0	0	0	0	0	0	0	0
0x0020	**AES_IVR0**	AES_IVR0[31:0]																															
	Reset value	0	0	0	0	0	0	0	0	0	0	0	0	0	0	0	0	0	0	0	0	0	0	0	0	0	0	0	0	0	0	0	0
0x0024	**AES_IVR1**	AES_IVR1[31:0]																															
	Reset value	0	0	0	0	0	0	0	0	0	0	0	0	0	0	0	0	0	0	0	0	0	0	0	0	0	0	0	0	0	0	0	0
0x0028	**AES_IVR2**	AES_IVR2[31:0]																															
	Reset value	0	0	0	0	0	0	0	0	0	0	0	0	0	0	0	0	0	0	0	0	0	0	0	0	0	0	0	0	0	0	0	0
0x002C	**AES_IVR3**	AES_IVR3[31:0]																															
	Reset value	0	0	0	0	0	0	0	0	0	0	0	0	0	0	0	0	0	0	0	0	0	0	0	0	0	0	0	0	0	0	0	0
0x0030	**AES_KEYR4**	AES_KEYR4[31:0]																															
	Reset value	0	0	0	0	0	0	0	0	0	0	0	0	0	0	0	0	0	0	0	0	0	0	0	0	0	0	0	0	0	0	0	0
0x0034	**AES_KEYR5**	AES_KEYR5[31:0]																															
	Reset value	0	0	0	0	0	0	0	0	0	0	0	0	0	0	0	0	0	0	0	0	0	0	0	0	0	0	0	0	0	0	0	0
0x0038	**AES_KEYR6**	AES_KEYR6[31:0]																															
	Reset value	0	0	0	0	0	0	0	0	0	0	0	0	0	0	0	0	0	0	0	0	0	0	0	0	0	0	0	0	0	0	0	0
0x003C	**AES_KEYR7**	AES_KEYR7[31:0]																															
	Reset value	0	0	0	0	0	0	0	0	0	0	0	0	0	0	0	0	0	0	0	0	0	0	0	0	0	0	0	0	0	0	0	0
0x0040	**AES_SUSP0R**	AES_SUSP0R[31:0]																															
	Reset value	0	0	0	0	0	0	0	0	0	0	0	0	0	0	0	0	0	0	0	0	0	0	0	0	0	0	0	0	0	0	0	0
0x0044	**AES_SUSP1R**	AES_SUSP1R[31:0]																															
	Reset value	0	0	0	0	0	0	0	0	0	0	0	0	0	0	0	0	0	0	0	0	0	0	0	0	0	0	0	0	0	0	0	0
0x0048	**AES_SUSP2R**	AES_SUSP2R[31:0]																															
	Reset value	0	0	0	0	0	0	0	0	0	0	0	0	0	0	0	0	0	0	0	0	0	0	0	0	0	0	0	0	0	0	0	0
0x004C	**AES_SUSP3R**	AES_SUSP3R[31:0]																															
	Reset value	0	0	0	0	0	0	0	0	0	0	0	0	0	0	0	0	0	0	0	0	0	0	0	0	0	0	0	0	0	0	0	0
0x0050	**AES_SUSP4R**	AES_SUSP4R[31:0]																															
	Reset value	0	0	0	0	0	0	0	0	0	0	0	0	0	0	0	0	0	0	0	0	0	0	0	0	0	0	0	0	0	0	0	0
0x0054	**AES_SUSP5R**	AES_SUSP5R[31:0]																															
	Reset value	0	0	0	0	0	0	0	0	0	0	0	0	0	0	0	0	0	0	0	0	0	0	0	0	0	0	0	0	0	0	0	0
0x0058	**AES_SUSP6R**	AES_SUSP6R[31:0]																															
	Reset value	0	0	0	0	0	0	0	0	0	0	0	0	0	0	0	0	0	0	0	0	0	0	0	0	0	0	0	0	0	0	0	0
0x005C	**AES_SUSP7R**	AES_SUSP7R[31:0]																															
	Reset value	0	0	0	0	0	0	0	0	0	0	0	0	0	0	0	0	0	0	0	0	0	0	0	0	0	0	0	0	0	0	0	0

Refer to *Section 2.2.2* for the register boundary addresses.

25 Advanced-control timers (TIM1)

25.1 TIM1 introduction

The advanced-control timer (TIM1) consists of a 16-bit auto-reload counter driven by a programmable prescaler.

It may be used for a variety of purposes, including measuring the pulse lengths of input signals (input capture) or generating output waveforms (output compare, PWM, complementary PWM with dead-time insertion).

Pulse lengths and waveform periods can be modulated from a few microseconds to several milliseconds using the timer prescaler and the RCC clock controller prescalers.

The advanced-control (TIM1) and general-purpose (TIMx) timers are completely independent, and do not share any resources. They can be synchronized together as described in *Section 25.3.26: Timer synchronization*.

25.2 TIM1 main features

TIM1 timer features include:

- 16-bit up, down, up/down auto-reload counter.
- 16-bit programmable prescaler allowing dividing (also “on the fly”) the counter clock frequency either by any factor between 1 and 65536.
- Up to 6 independent channels for:
  - Input Capture (but channels 5 and 6)
  - Output Compare
  - PWM generation (Edge and Center-aligned Mode)
  - One-pulse mode output
- Complementary outputs with programmable dead-time
- Synchronization circuit to control the timer with external signals and to interconnect several timers together.
- Repetition counter to update the timer registers only after a given number of cycles of the counter.
- 2 break inputs to put the timer’s output signals in a safe user selectable configuration.
- Interrupt/DMA generation on the following events:
  - Update: counter overflow/underflow, counter initialization (by software or internal/external trigger)
  - Trigger event (counter start, stop, initialization or count by internal/external trigger)
  - Input capture
  - Output compare
- Supports incremental (quadrature) encoder and Hall-sensor circuitry for positioning purposes
- Trigger input for external clock or cycle-by-cycle current management

Figure 163. Advanced-control timer block diagram

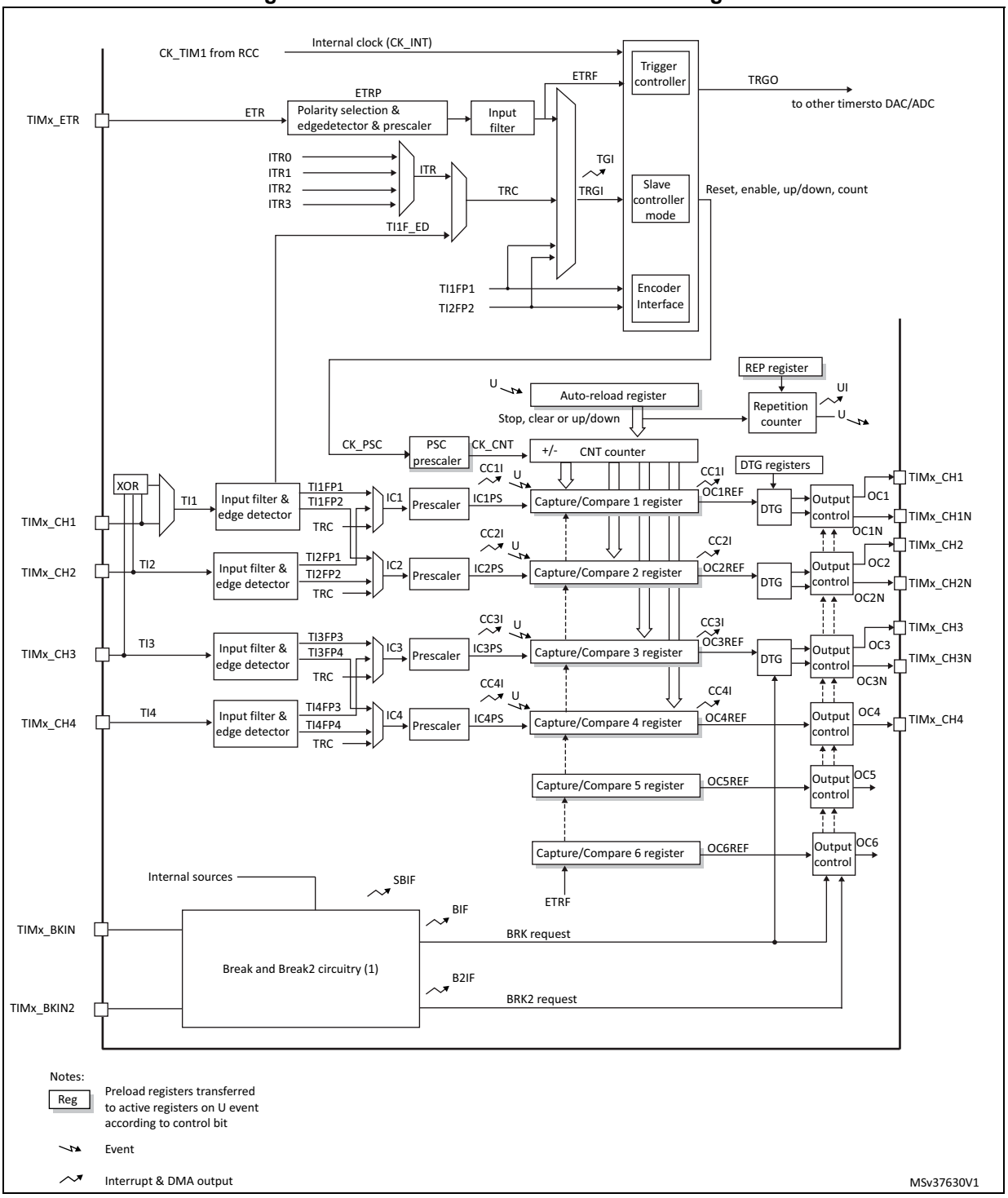

1. See *Figure 206: Break and Break2 circuitry overview* for details

25.3 TIM1 functional description

25.3.1 Time-base unit

The main block of the programmable advanced-control timer is a 16-bit counter with its related auto-reload register. The counter can count up, down or both up and down. The counter clock can be divided by a prescaler.

The counter, the auto-reload register and the prescaler register can be written or read by software. This is true even when the counter is running.

The time-base unit includes:

- Counter register (TIMx_CNT)
- Prescaler register (TIMx_PSC)
- Auto-reload register (TIMx_ARR)
- Repetition counter register (TIMx_RCR)

The auto-reload register is preloaded. Writing to or reading from the auto-reload register accesses the preload register. The content of the preload register are transferred into the shadow register permanently or at each update event (UEV), depending on the auto-reload preload enable bit (ARPE) in TIMx_CR1 register. The update event is sent when the counter reaches the overflow (or underflow when downcounting) and if the UDIS bit equals 0 in the TIMx_CR1 register. It can also be generated by software. The generation of the update event is described in detailed for each configuration.

The counter is clocked by the prescaler output CK_CNT, which is enabled only when the counter enable bit (CEN) in TIMx_CR1 register is set (refer also to the slave mode controller description to get more details on counter enabling).

Note that the counter starts counting 1 clock cycle after setting the CEN bit in the TIMx_CR1 register.

Prescaler description

The prescaler can divide the counter clock frequency by any factor between 1 and 65536. It is based on a 16-bit counter controlled through a 16-bit register (in the TIMx_PSC register). It can be changed on the fly as this control register is buffered. The new prescaler ratio is taken into account at the next update event.

Figure 164 and *Figure 165* give some examples of the counter behavior when the prescaler ratio is changed on the fly:

Figure 164. Counter timing diagram with prescaler division change from 1 to 2

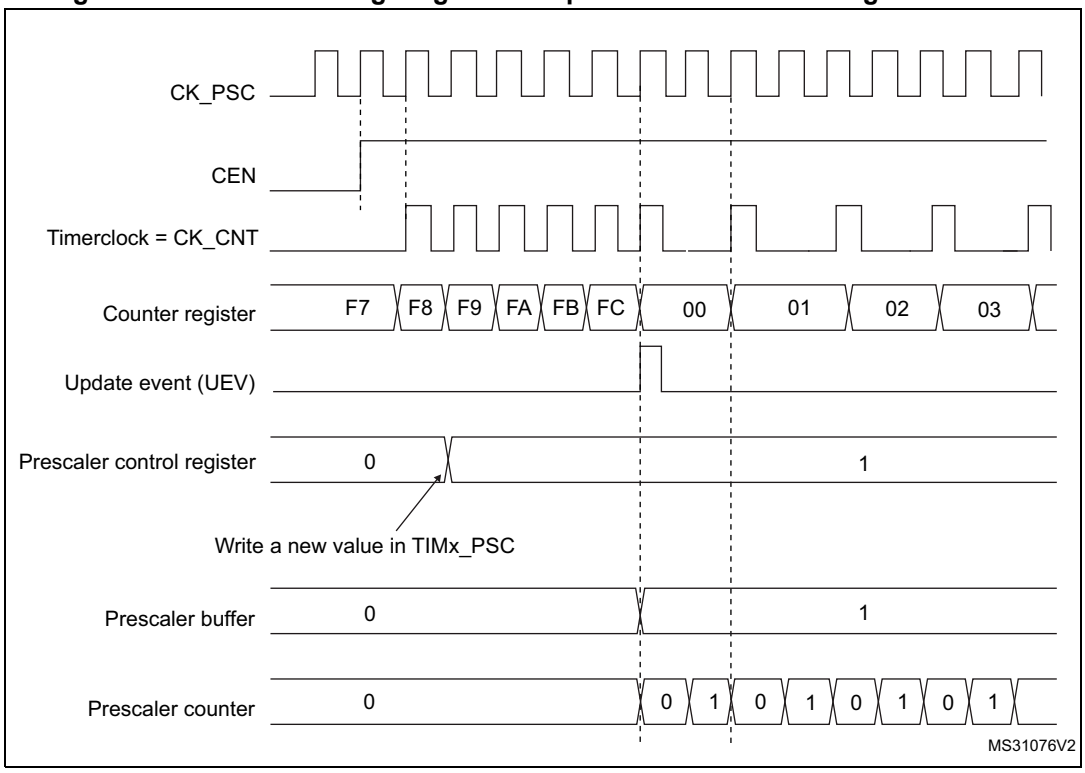

Figure 165. Counter timing diagram with prescaler division change from 1 to 4

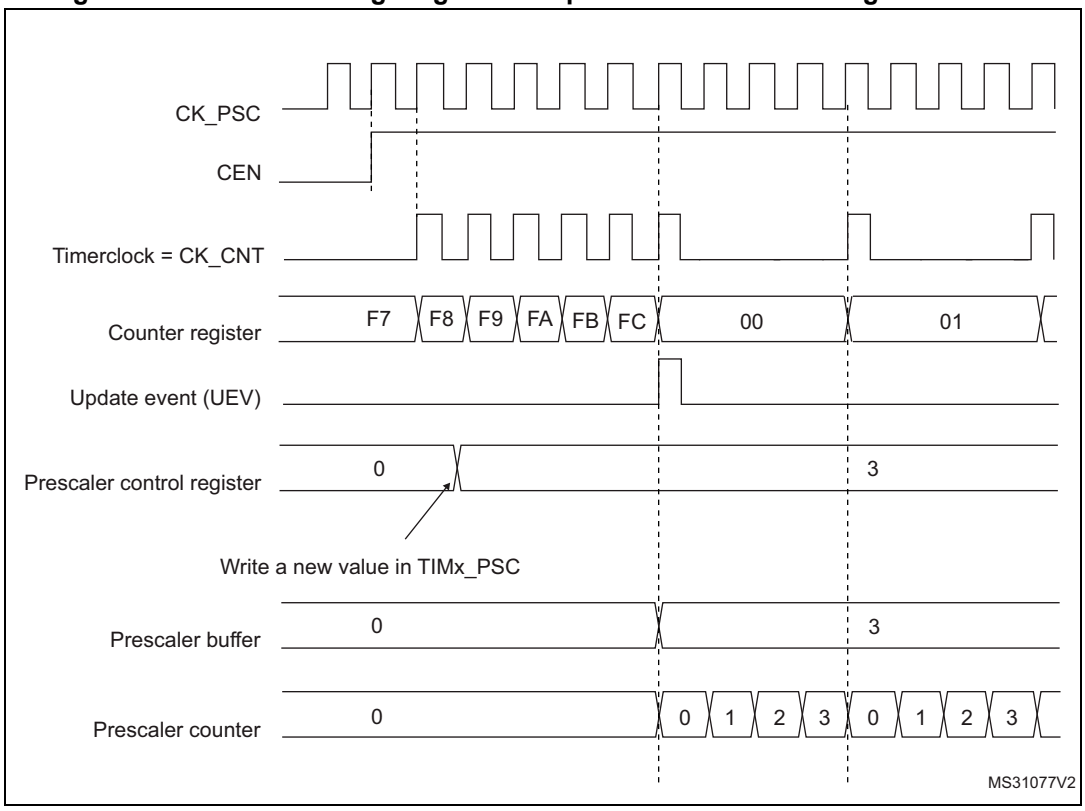

25.3.2 Counter modes

Upcounting mode

In upcounting mode, the counter counts from 0 to the auto-reload value (content of the TIMx_ARR register), then restarts from 0 and generates a counter overflow event.

If the repetition counter is used, the update event (UEV) is generated after upcounting is repeated for the number of times programmed in the repetition counter register (TIMx_RCR) + 1. Else the update event is generated at each counter overflow.

Setting the UG bit in the TIMx_EGR register (by software or by using the slave mode controller) also generates an update event.

The UEV event can be disabled by software by setting the UDIS bit in the TIMx_CR1 register. This is to avoid updating the shadow registers while writing new values in the preload registers. Then no update event occurs until the UDIS bit has been written to 0. However, the counter restarts from 0, as well as the counter of the prescaler (but the prescale rate does not change). In addition, if the URS bit (update request selection) in TIMx_CR1 register is set, setting the UG bit generates an update event UEV but without setting the UIF flag (thus no interrupt or DMA request is sent). This is to avoid generating both update and capture interrupts when clearing the counter on the capture event.

When an update event occurs, all the registers are updated and the update flag (UIF bit in TIMx_SR register) is set (depending on the URS bit):

- The repetition counter is reloaded with the content of TIMx_RCR register,
- The auto-reload shadow register is updated with the preload value (TIMx_ARR),
- The buffer of the prescaler is reloaded with the preload value (content of the TIMx_PSC register).

The following figures show some examples of the counter behavior for different clock frequencies when TIMx_ARR=0x36.

Figure 166. Counter timing diagram, internal clock divided by 1

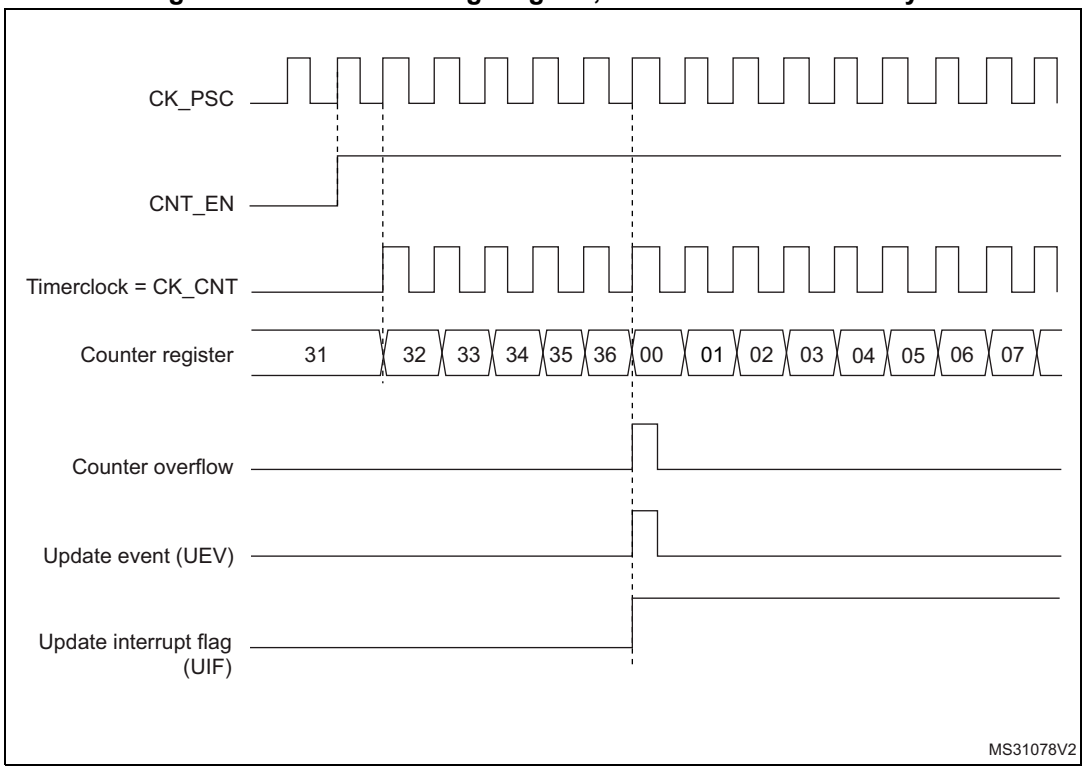

Figure 167. Counter timing diagram, internal clock divided by 2

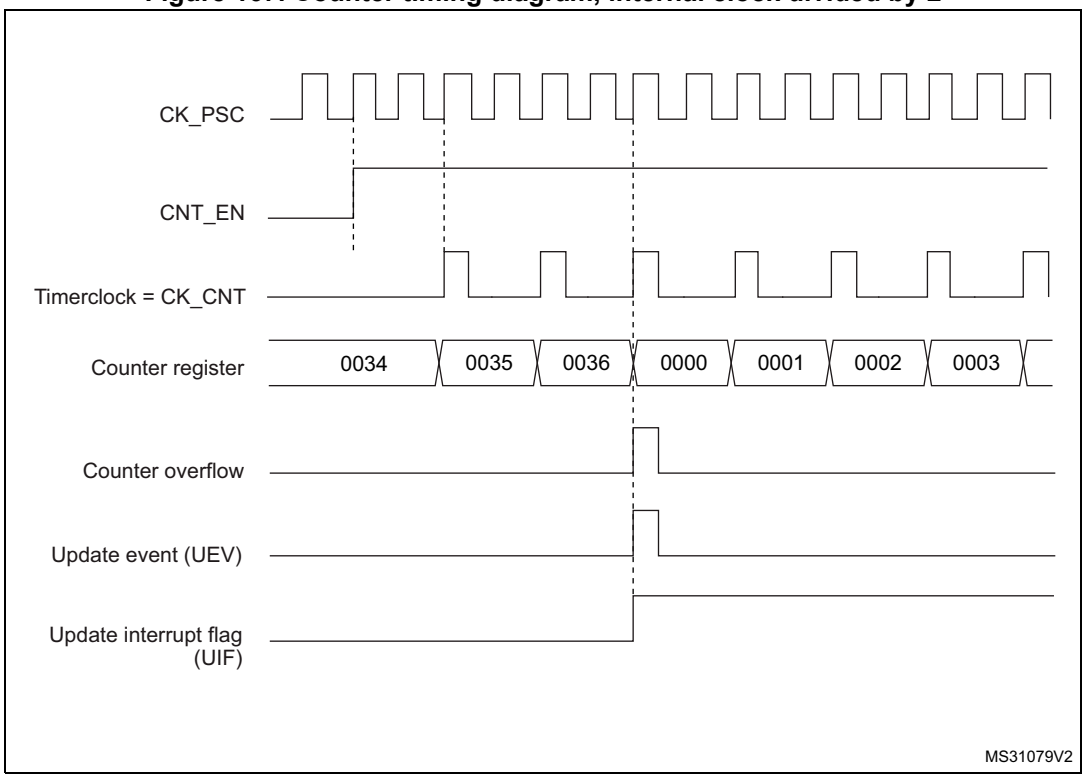

Figure 168. Counter timing diagram, internal clock divided by 4

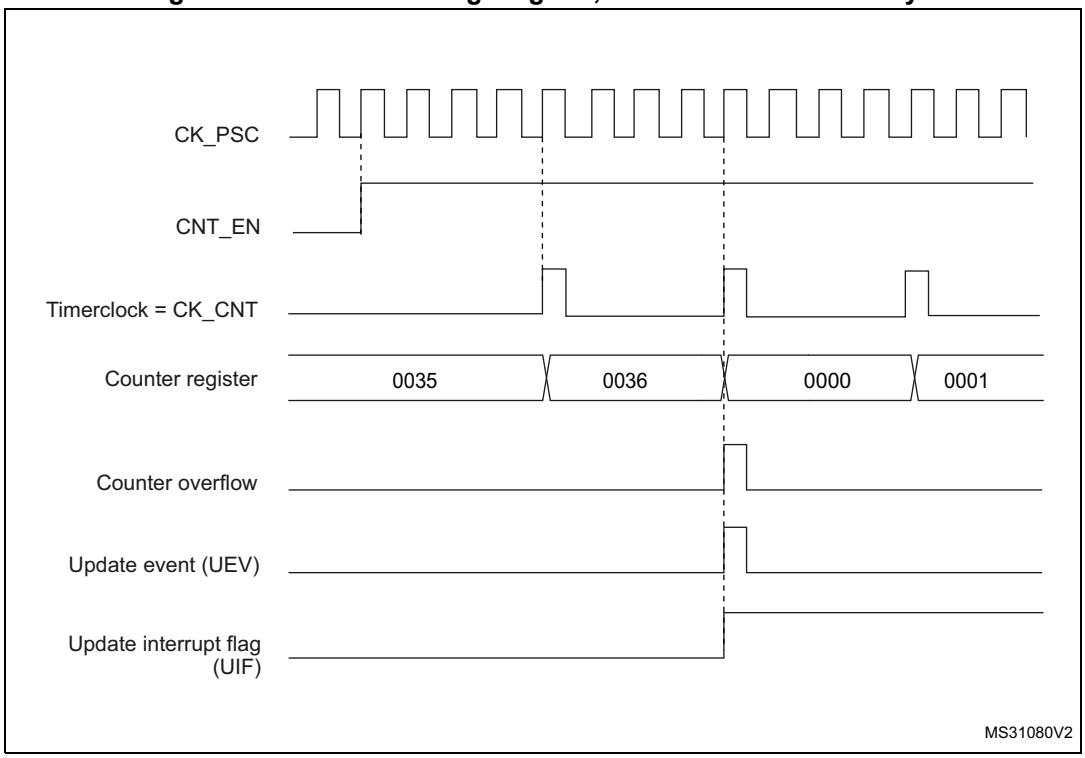

Figure 169. Counter timing diagram, internal clock divided by N

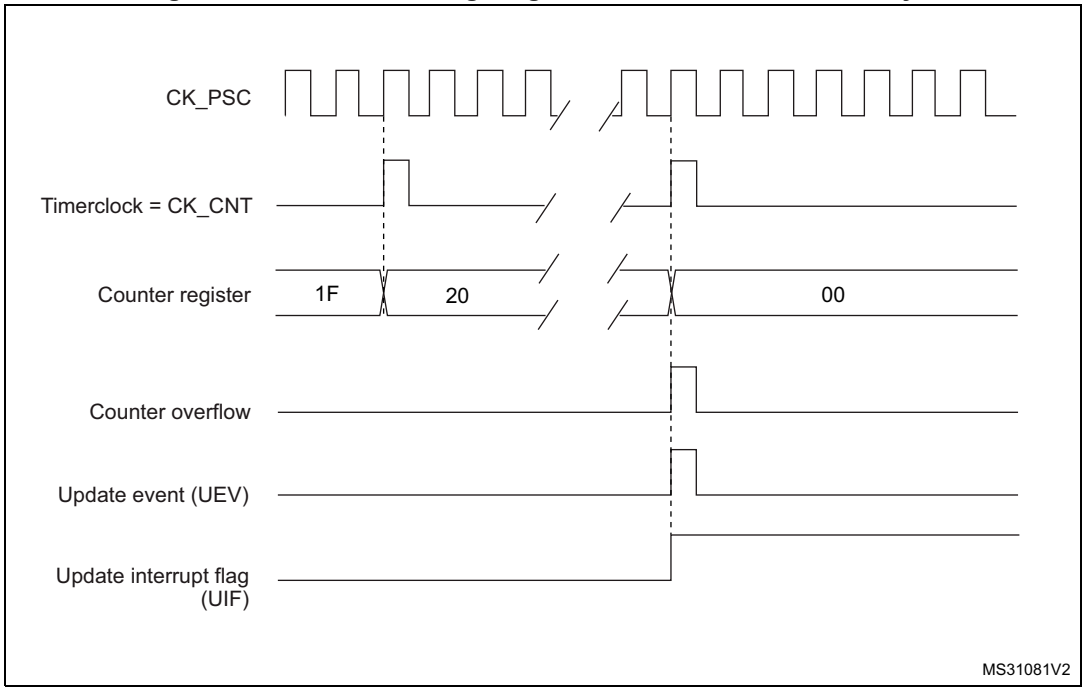

Figure 170. Counter timing diagram, update event when ARPE=0 (TIMx_ARR not preloaded)

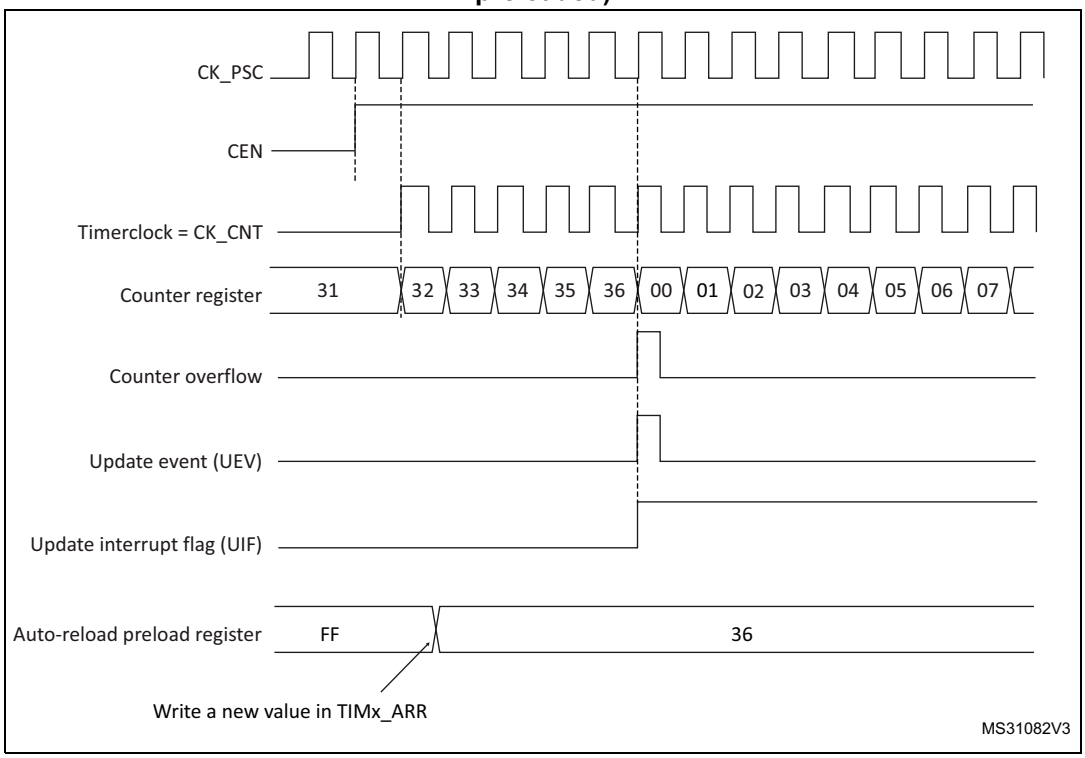

Figure 171. Counter timing diagram, update event when ARPE=1 (TIMx_ARR preloaded)

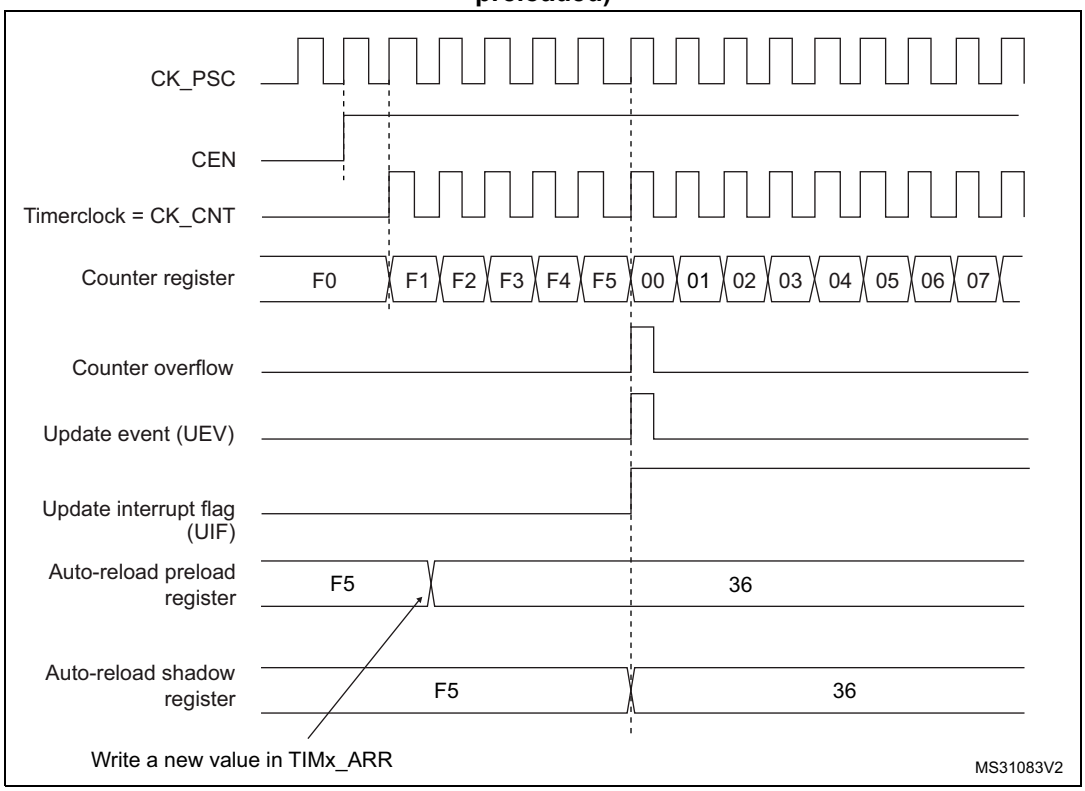

Downcounting mode

In downcounting mode, the counter counts from the auto-reload value (content of the TIMx_ARR register) down to 0, then restarts from the auto-reload value and generates a counter underflow event.

If the repetition counter is used, the update event (UEV) is generated after downcounting is repeated for the number of times programmed in the repetition counter register (TIMx_RCR) + 1. Else the update event is generated at each counter underflow.

Setting the UG bit in the TIMx_EGR register (by software or by using the slave mode controller) also generates an update event.

The UEV update event can be disabled by software by setting the UDIS bit in TIMx_CR1 register. This is to avoid updating the shadow registers while writing new values in the preload registers. Then no update event occurs until UDIS bit has been written to 0. However, the counter restarts from the current auto-reload value, whereas the counter of the prescaler restarts from 0 (but the prescale rate doesn't change).

In addition, if the URS bit (update request selection) in TIMx_CR1 register is set, setting the UG bit generates an update event UEV but without setting the UIF flag (thus no interrupt or DMA request is sent). This is to avoid generating both update and capture interrupts when clearing the counter on the capture event.

When an update event occurs, all the registers are updated and the update flag (UIF bit in TIMx_SR register) is set (depending on the URS bit):

- The repetition counter is reloaded with the content of TIMx_RCR register.
- The buffer of the prescaler is reloaded with the preload value (content of the TIMx_PSC register).
- The auto-reload active register is updated with the preload value (content of the TIMx_ARR register). Note that the auto-reload is updated before the counter is reloaded, so that the next period is the expected one.

The following figures show some examples of the counter behavior for different clock frequencies when TIMx_ARR=0x36.

Figure 172. Counter timing diagram, internal clock divided by 1

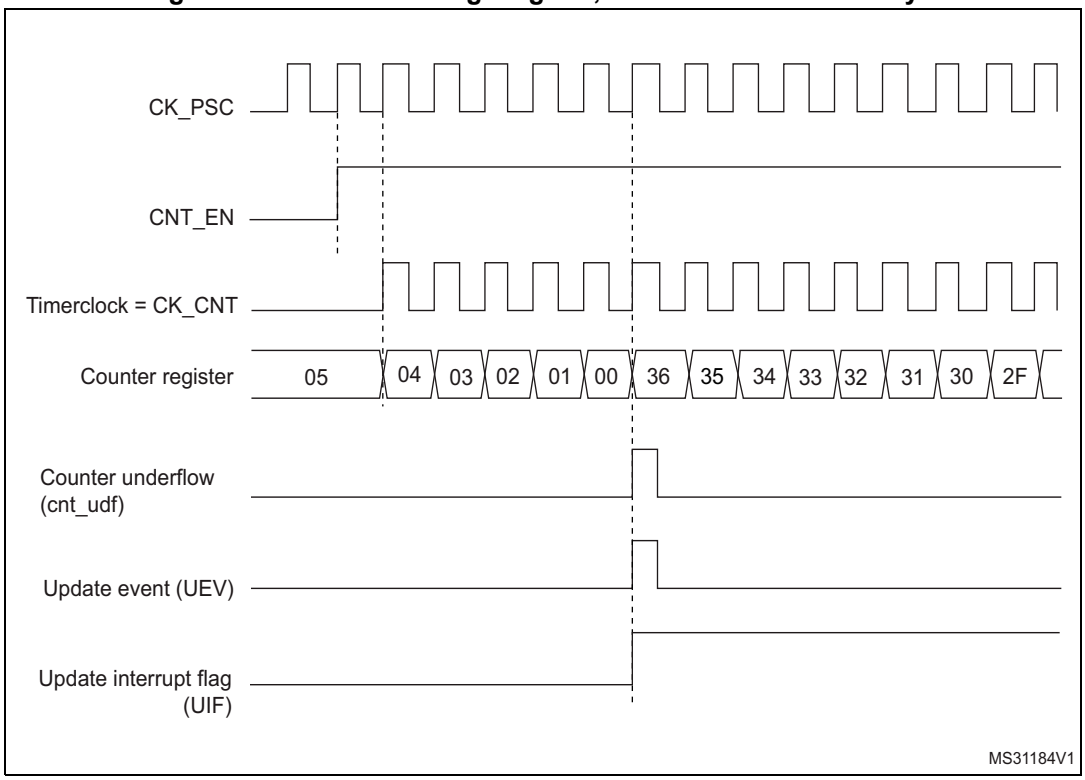

Figure 173. Counter timing diagram, internal clock divided by 2

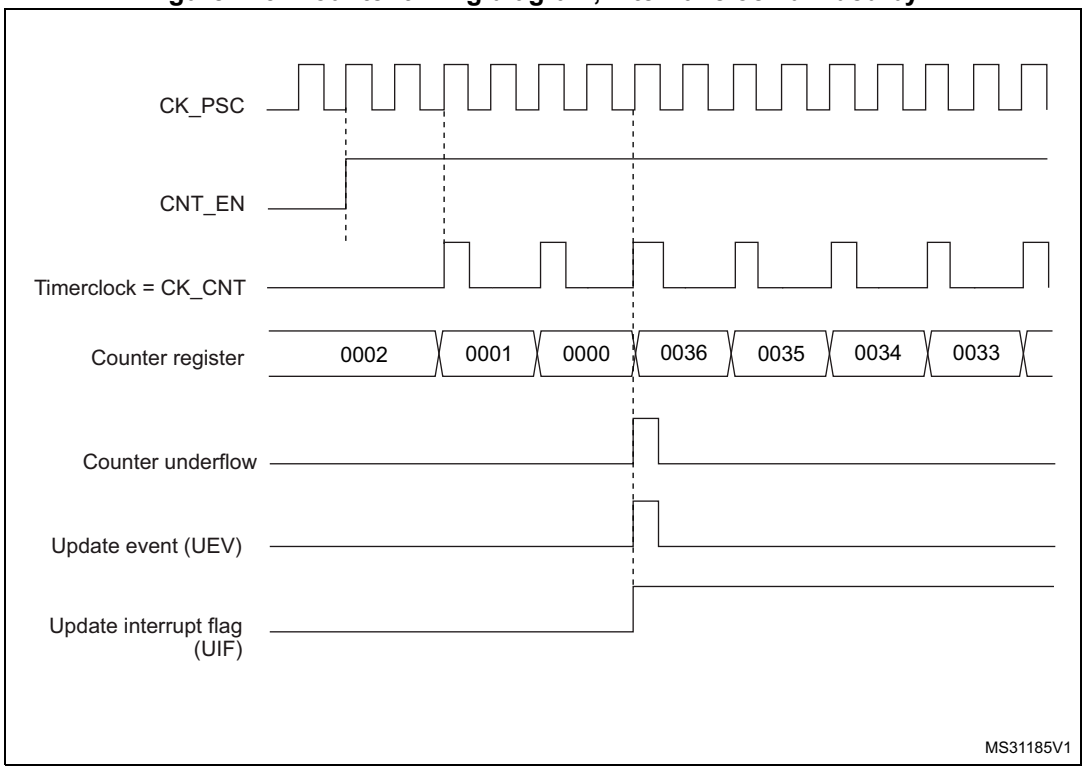

Figure 174. Counter timing diagram, internal clock divided by 4

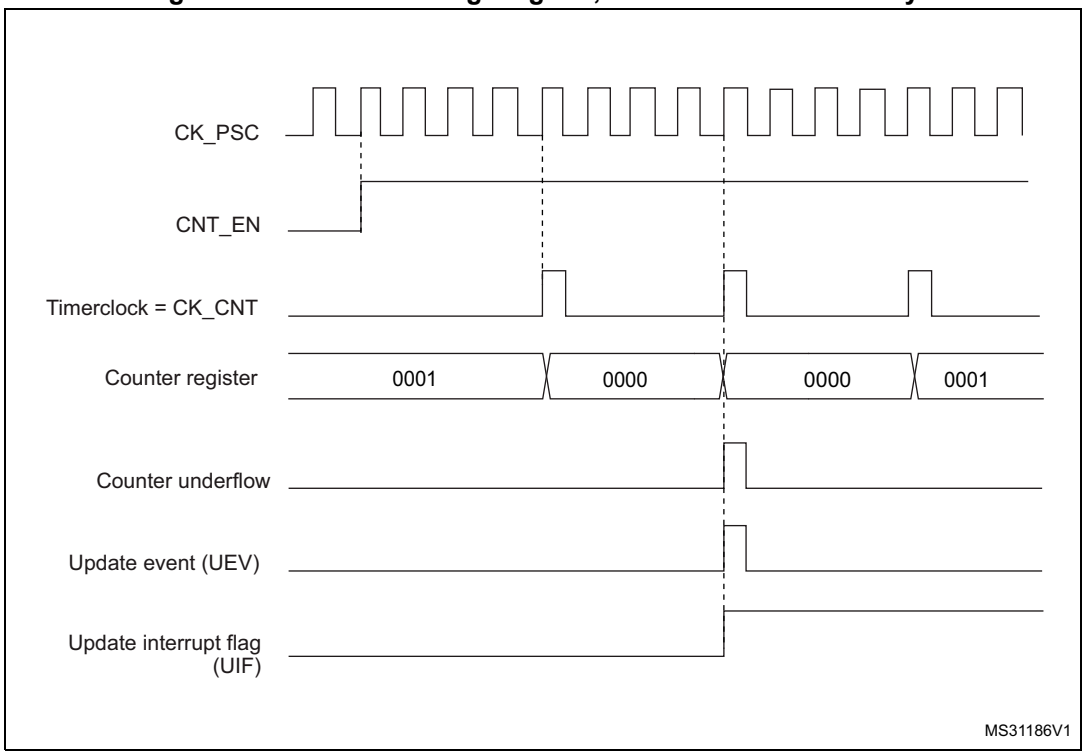

Figure 175. Counter timing diagram, internal clock divided by N

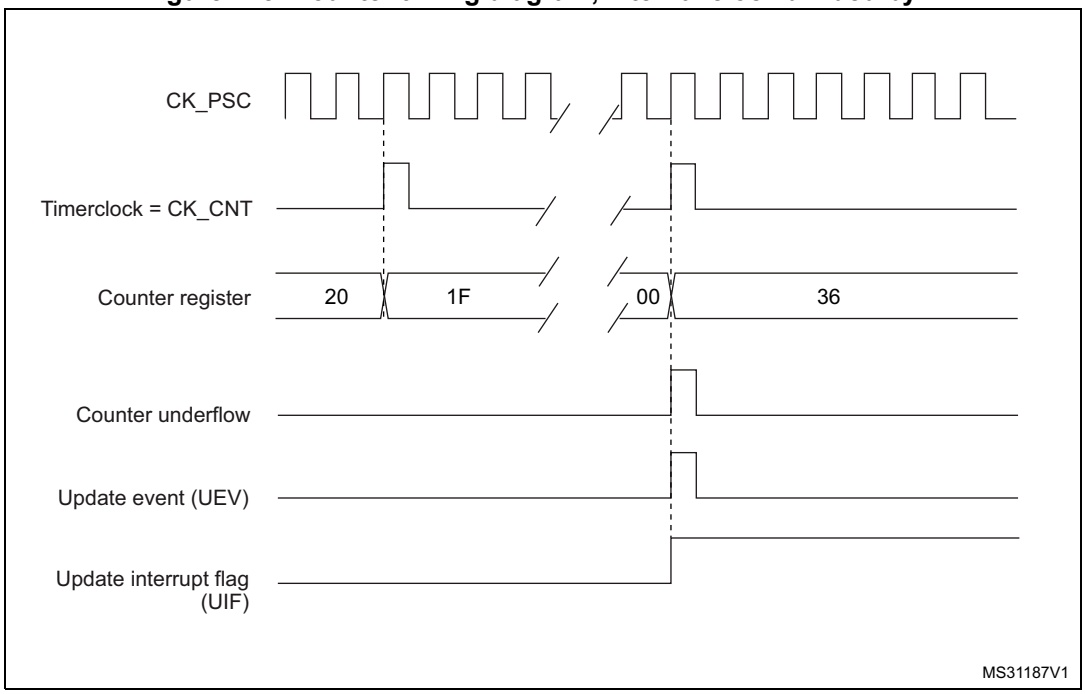

Figure 176. Counter timing diagram, update event when repetition counter is not used

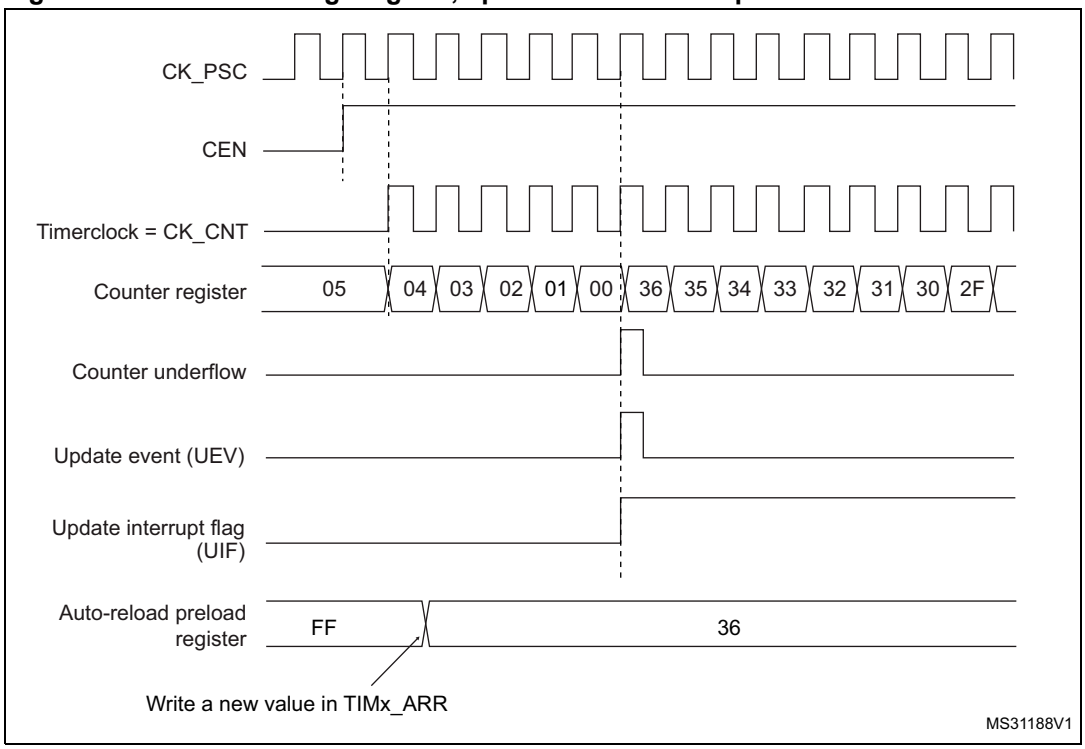

Center-aligned mode (up/down counting)

In center-aligned mode, the counter counts from 0 to the auto-reload value (content of the TIMx_ARR register) – 1, generates a counter overflow event, then counts from the auto-reload value down to 1 and generates a counter underflow event. Then it restarts counting from 0.

Center-aligned mode is active when the CMS bits in TIMx_CR1 register are not equal to '00'. The Output compare interrupt flag of channels configured in output is set when: the counter counts down (Center aligned mode 1, CMS = "01"), the counter counts up (Center aligned mode 2, CMS = "10") the counter counts up and down (Center aligned mode 3, CMS = "11").

In this mode, the DIR direction bit in the TIMx_CR1 register cannot be written. It is updated by hardware and gives the current direction of the counter.

The update event can be generated at each counter overflow and at each counter underflow or by setting the UG bit in the TIMx_EGR register (by software or by using the slave mode controller) also generates an update event. In this case, the counter restarts counting from 0, as well as the counter of the prescaler.

The UEV update event can be disabled by software by setting the UDIS bit in the TIMx_CR1 register. This is to avoid updating the shadow registers while writing new values in the preload registers. Then no update event occurs until UDIS bit has been written to 0. However, the counter continues counting up and down, based on the current auto-reload value.

In addition, if the URS bit (update request selection) in TIMx_CR1 register is set, setting the UG bit generates an UEV update event but without setting the UIF flag (thus no interrupt or

DMA request is sent). This is to avoid generating both update and capture interrupts when clearing the counter on the capture event.

When an update event occurs, all the registers are updated and the update flag (UIF bit in TIMx_SR register) is set (depending on the URS bit):

- The repetition counter is reloaded with the content of TIMx_RCR register
- The buffer of the prescaler is reloaded with the preload value (content of the TIMx_PSC register)
- The auto-reload active register is updated with the preload value (content of the TIMx_ARR register). Note that if the update source is a counter overflow, the auto-reload is updated before the counter is reloaded, so that the next period is the expected one (the counter is loaded with the new value).

The following figures show some examples of the counter behavior for different clock frequencies.

Figure 177. Counter timing diagram, internal clock divided by 1, TIMx_ARR = 0x6

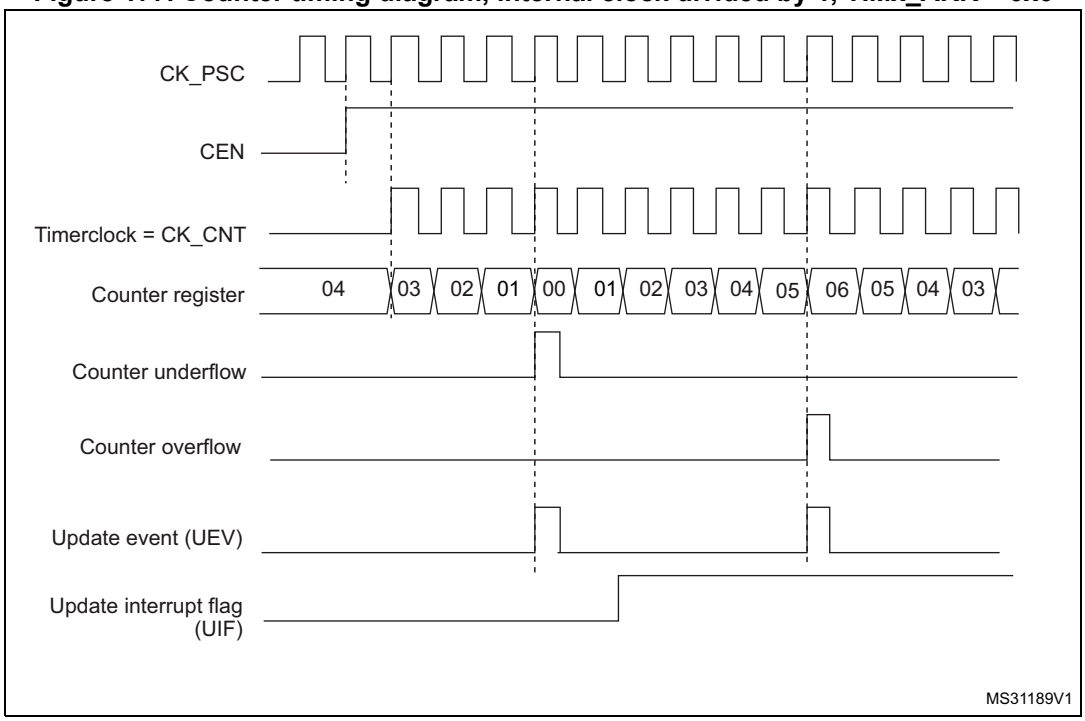

1. Here, center-aligned mode 1 is used (for more details refer to *Section 25.4: TIM1 registers*).

Figure 178. Counter timing diagram, internal clock divided by 2

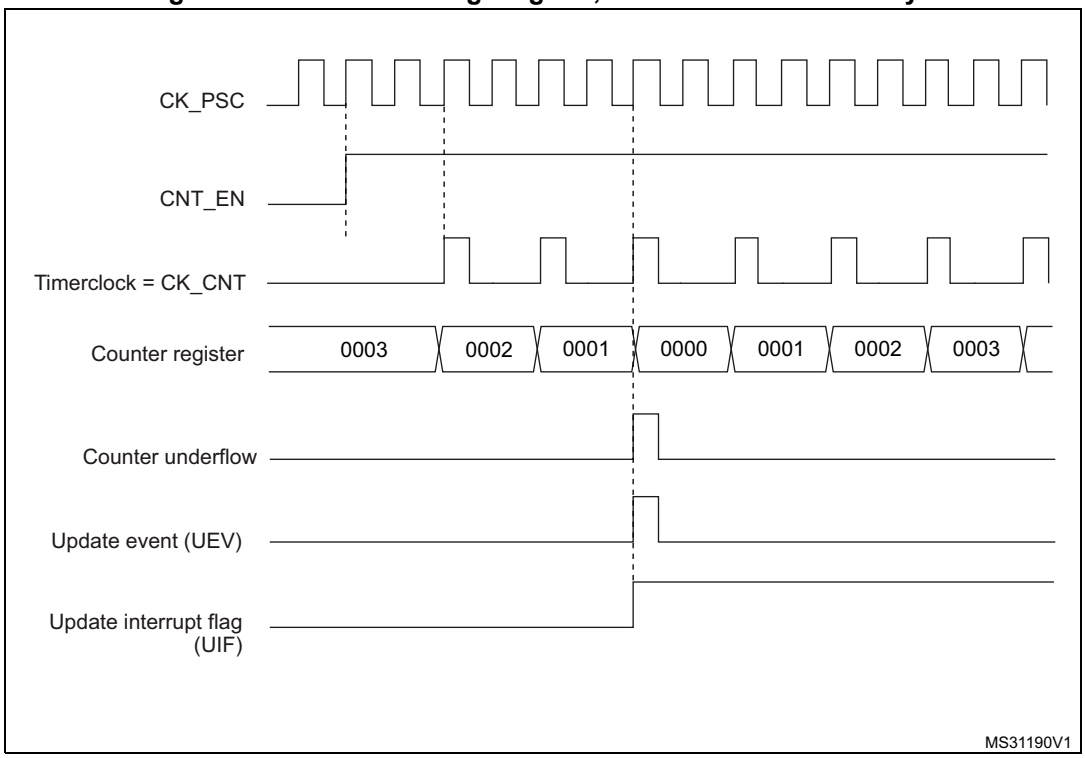

Figure 179. Counter timing diagram, internal clock divided by 4, TIMx_ARR=0x36

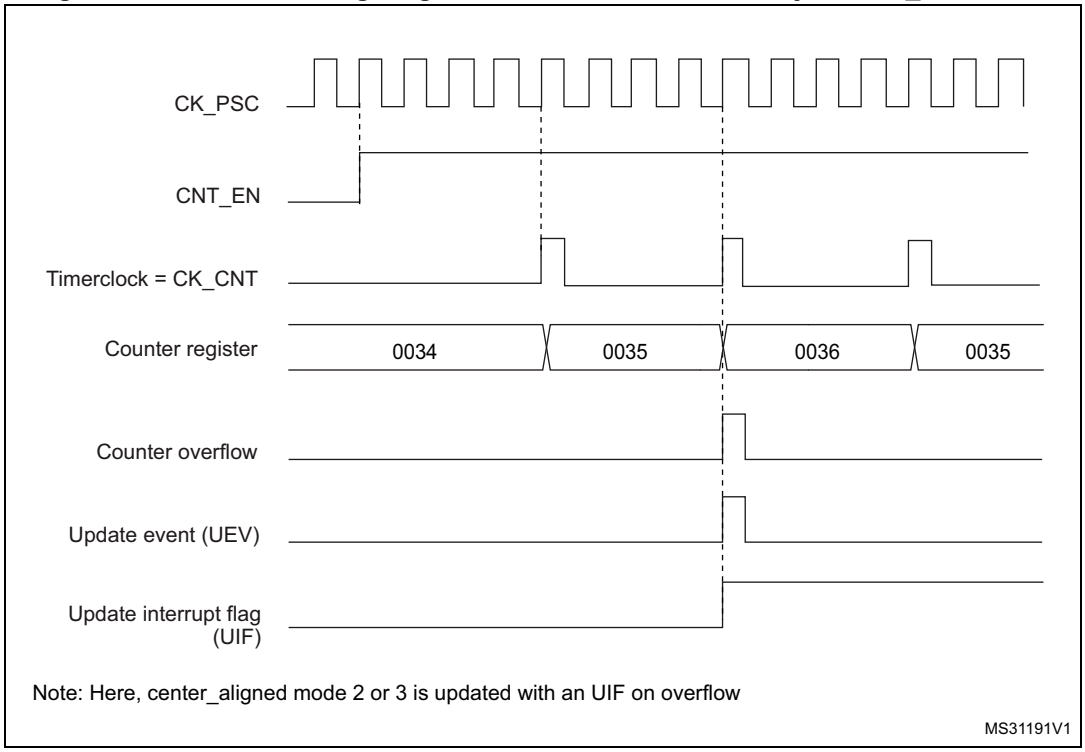

Figure 180. Counter timing diagram, internal clock divided by N

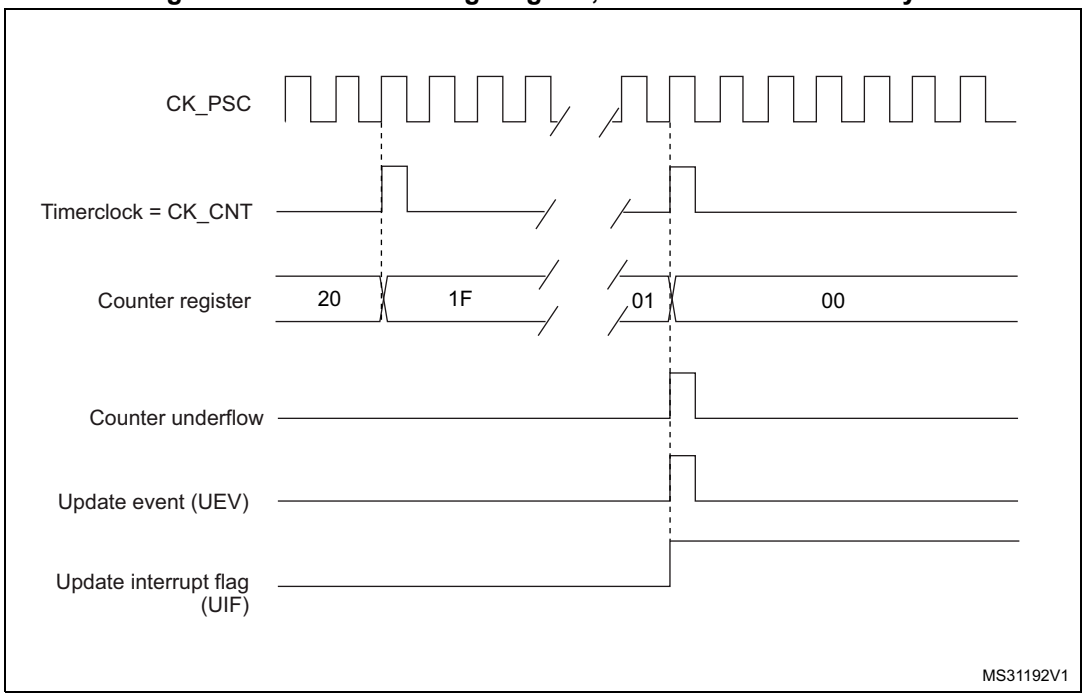

Figure 181. Counter timing diagram, update event with ARPE=1 (counter underflow)

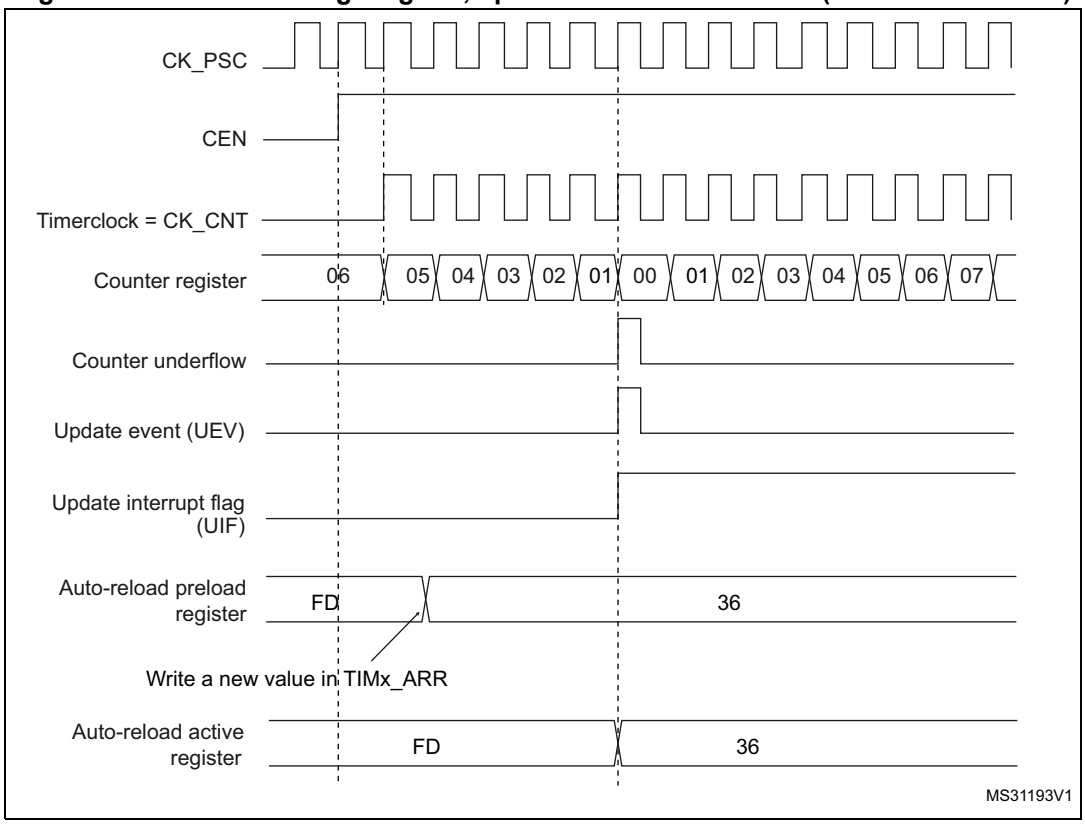

Figure 182. Counter timing diagram, Update event with ARPE=1 (counter overflow)

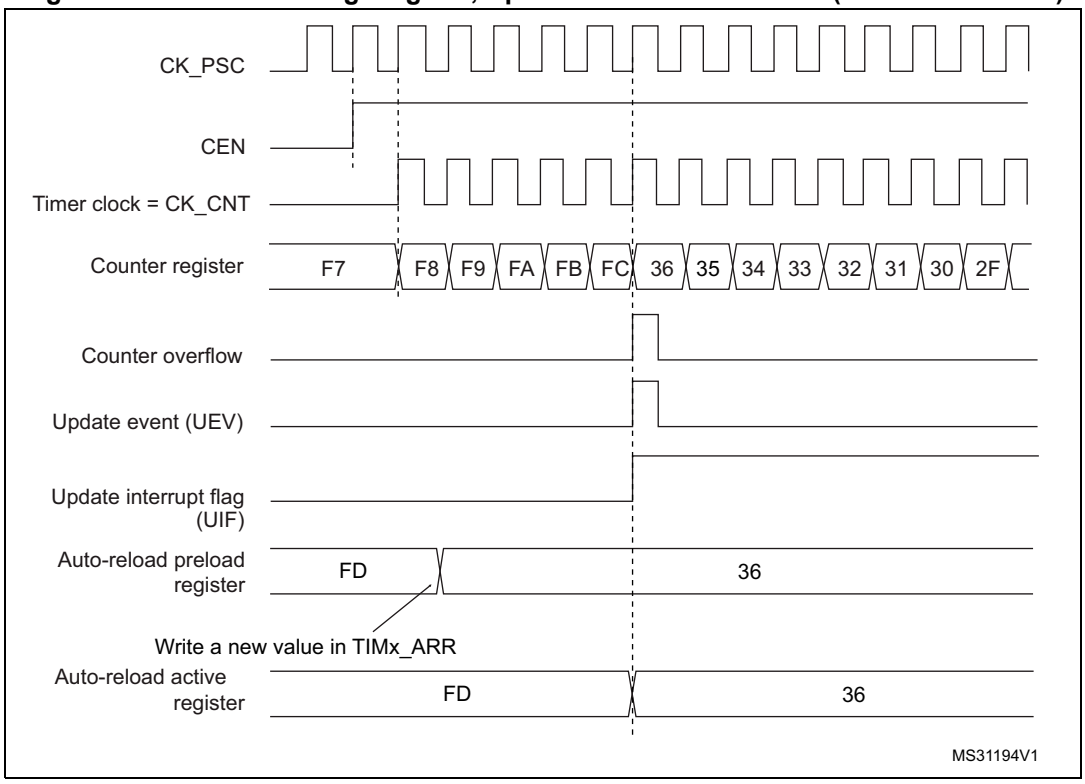

25.3.3 Repetition counter

Section 25.3.1: Time-base unit describes how the update event (UEV) is generated with respect to the counter overflows/underflows. It is actually generated only when the repetition counter has reached zero. This can be useful when generating PWM signals.

This means that data are transferred from the preload registers to the shadow registers (TIMx_ARR auto-reload register, TIMx_PSC prescaler register, but also TIMx_CCRx capture/compare registers in compare mode) every N+1 counter overflows or underflows, where N is the value in the TIMx_RCR repetition counter register.

The repetition counter is decremented:

- At each counter overflow in upcounting mode,
- At each counter underflow in downcounting mode,
- At each counter overflow and at each counter underflow in center-aligned mode. Although this limits the maximum number of repetition to 32768 PWM cycles, it makes it possible to update the duty cycle twice per PWM period. When refreshing compare registers only once per PWM period in center-aligned mode, maximum resolution is $2xT_{ck}$, due to the symmetry of the pattern.

The repetition counter is an auto-reload type; the repetition rate is maintained as defined by the TIMx_RCR register value (refer to *Figure 183*). When the update event is generated by software (by setting the UG bit in TIMx_EGR register) or by hardware through the slave mode controller, it occurs immediately whatever the value of the repetition counter is and the repetition counter is reloaded with the content of the TIMx_RCR register.

In Center aligned mode, for odd values of RCR, the update event occurs either on the overflow or on the underflow depending on when the RCR register was written and when the counter was launched: if the RCR was written before launching the counter, the UEV occurs on the overflow. If the RCR was written after launching the counter, the UEV occurs on the underflow.

For example, for RCR = 3, the UEV is generated each 4th overflow or underflow event depending on when the RCR was written.

Figure 183. Update rate examples depending on mode and TIMx_RCR register settings

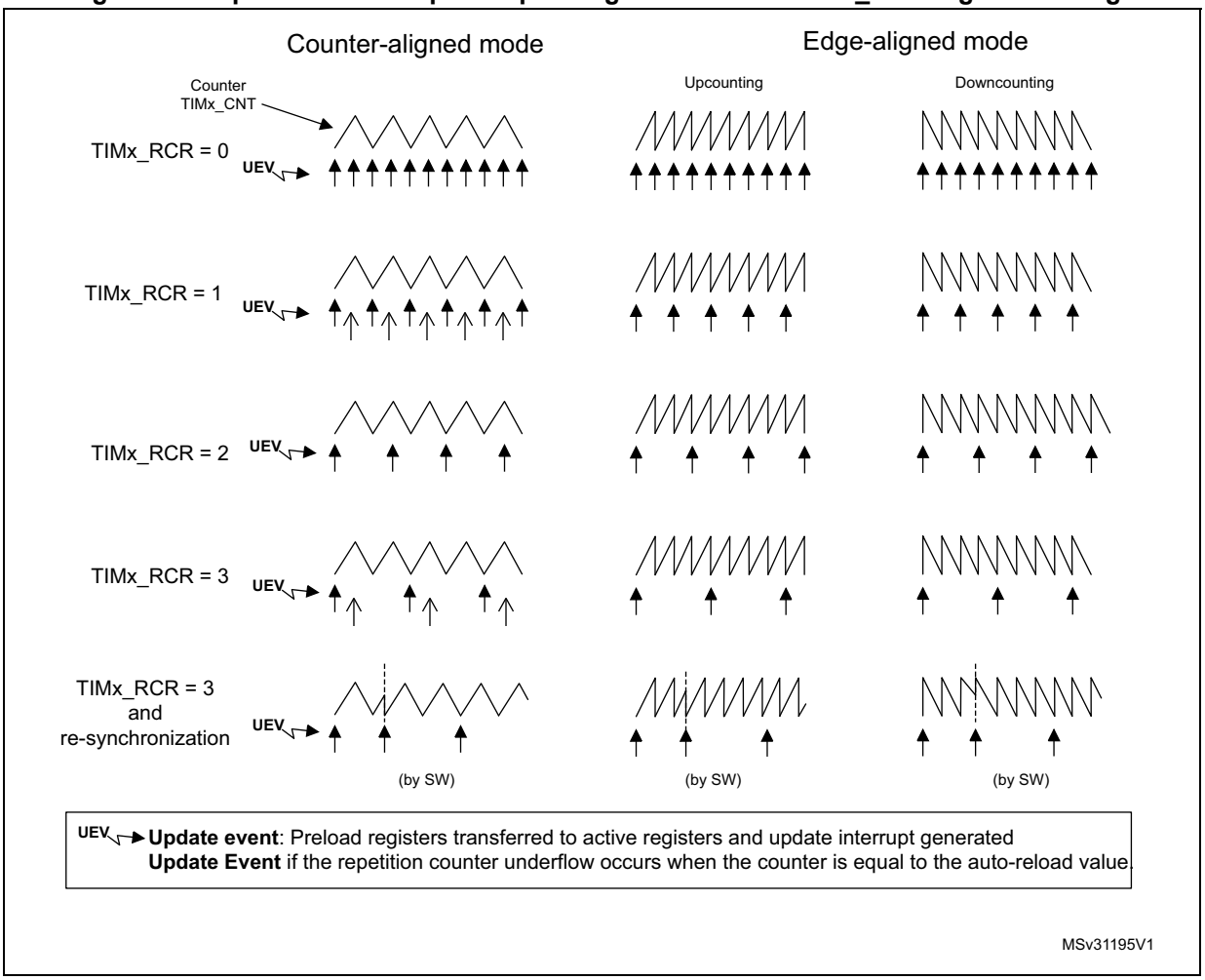

25.3.4 External trigger input

The timer features an external trigger input ETR. It can be used as:

- external clock (external clock mode 2, see *Section 25.3.5*)
- trigger for the slave mode (see *Section 25.3.26*)
- PWM reset input for cycle-by-cycle current regulation (see *Section 25.3.7*)

Figure 184 below describes the ETR input conditioning. The input polarity is defined with the ETP bit in TIMxSMCR register. The trigger can be prescaled with the divider programmed by the ETPS[1:0] bitfield and digitally filtered with the ETF[3:0] bitfield.

Figure 184. External trigger input block

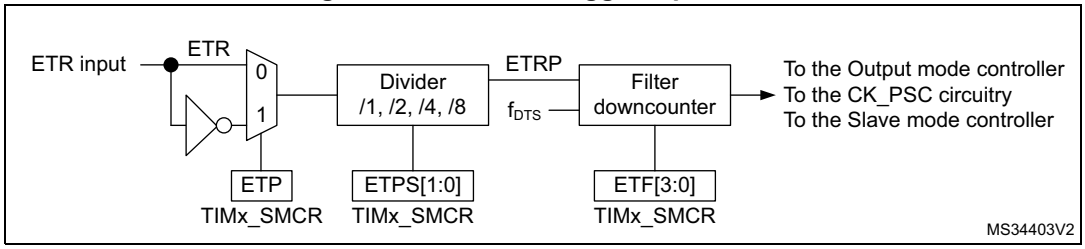

The ETR input comes from multiple sources: input pins (default configuration), comparator outputs and analog watchdogs. The selection is done with:

- the ETRSEL[2:0] bitfield in the TIMx_OR2 register
- the ETR_ADC1_RMP bitfield in the TIMxOR1[1:0] register
- the ETR_ADC3_RMP bitfield in the TIMxOR1[3:2] register.

Figure 185. TIM1 ETR input circuitry

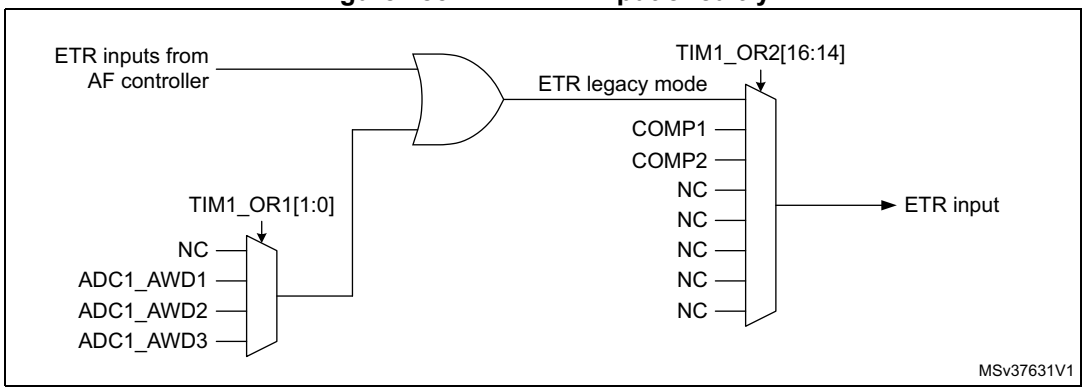

25.3.5 Clock selection

The counter clock can be provided by the following clock sources:

- Internal clock (CK_INT)
- External clock mode1: external input pin
- External clock mode2: external trigger input ETR
- Encoder mode

Internal clock source (CK_INT)

If the slave mode controller is disabled (SMS=000), then the CEN, DIR (in the TIMx_CR1 register) and UG bits (in the TIMx_EGR register) are actual control bits and can be changed only by software (except UG which remains cleared automatically). As soon as the CEN bit is written to 1, the prescaler is clocked by the internal clock CK_INT.

Figure 186 shows the behavior of the control circuit and the upcounter in normal mode, without prescaler.

Figure 186. Control circuit in normal mode, internal clock divided by 1

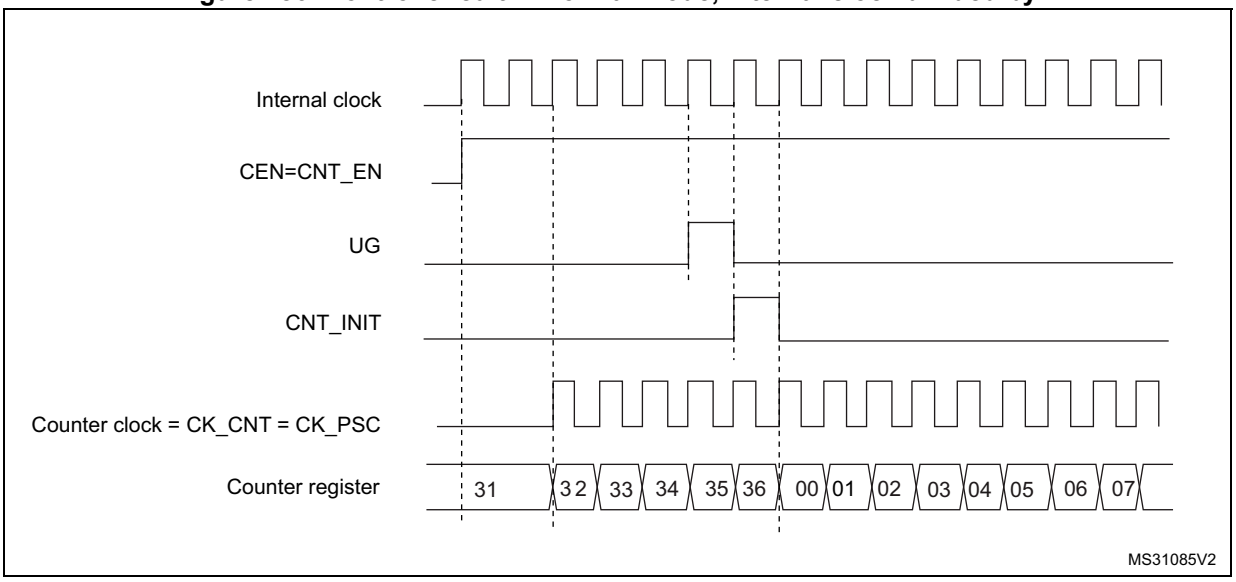

External clock source mode 1

This mode is selected when SMS=111 in the TIMx_SMCR register. The counter can count at each rising or falling edge on a selected input.

Figure 187. TI2 external clock connection example

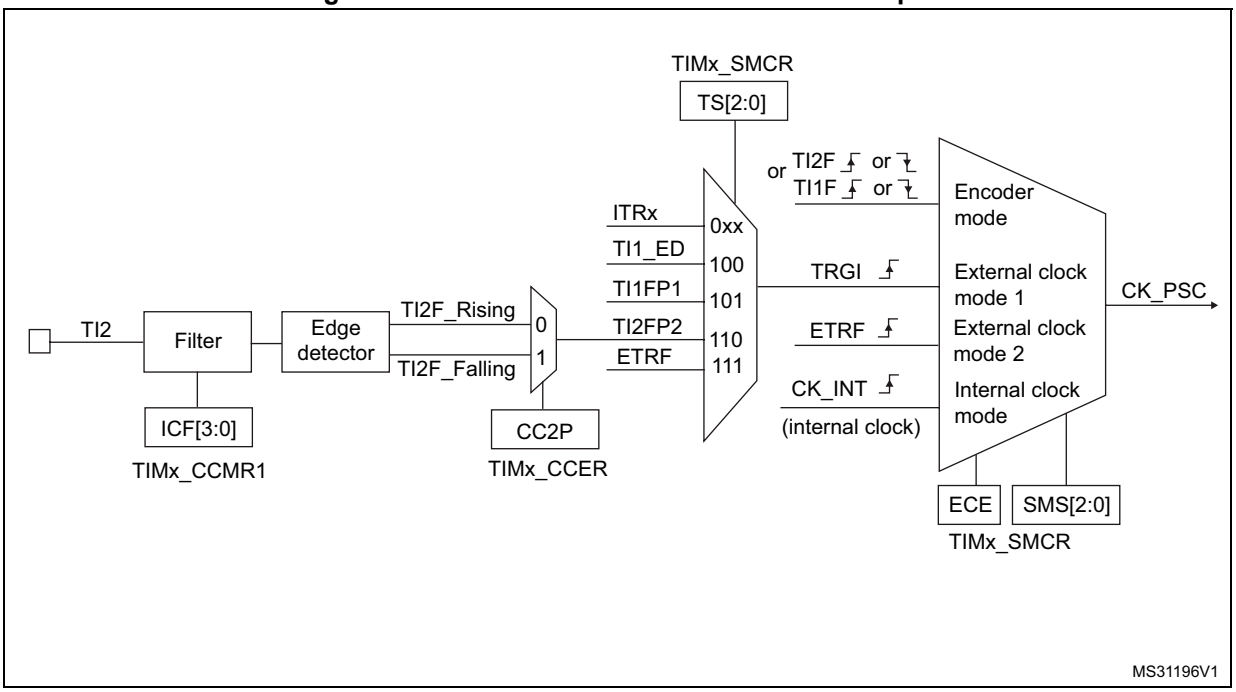

For example, to configure the upcounter to count in response to a rising edge on the TI2 input, use the following procedure:

1. Configure channel 2 to detect rising edges on the TI2 input by writing CC2S = ‘01’ in the TIMx_CCMR1 register.
2. Configure the input filter duration by writing the IC2F[3:0] bits in the TIMx_CCMR1 register (if no filter is needed, keep IC2F=0000).
3. Select rising edge polarity by writing CC2P=0 and CC2NP=0 in the TIMx_CCER register.
4. Configure the timer in external clock mode 1 by writing SMS=111 in the TIMx_SMCR register.
5. Select TI2 as the trigger input source by writing TS=110 in the TIMx_SMCR register.
6. Enable the counter by writing CEN=1 in the TIMx_CR1 register.

Note: The capture prescaler is not used for triggering, so the user does not need to configure it.

When a rising edge occurs on TI2, the counter counts once and the TIF flag is set.

The delay between the rising edge on TI2 and the actual clock of the counter is due to the resynchronization circuit on TI2 input.

Figure 188. Control circuit in external clock mode 1

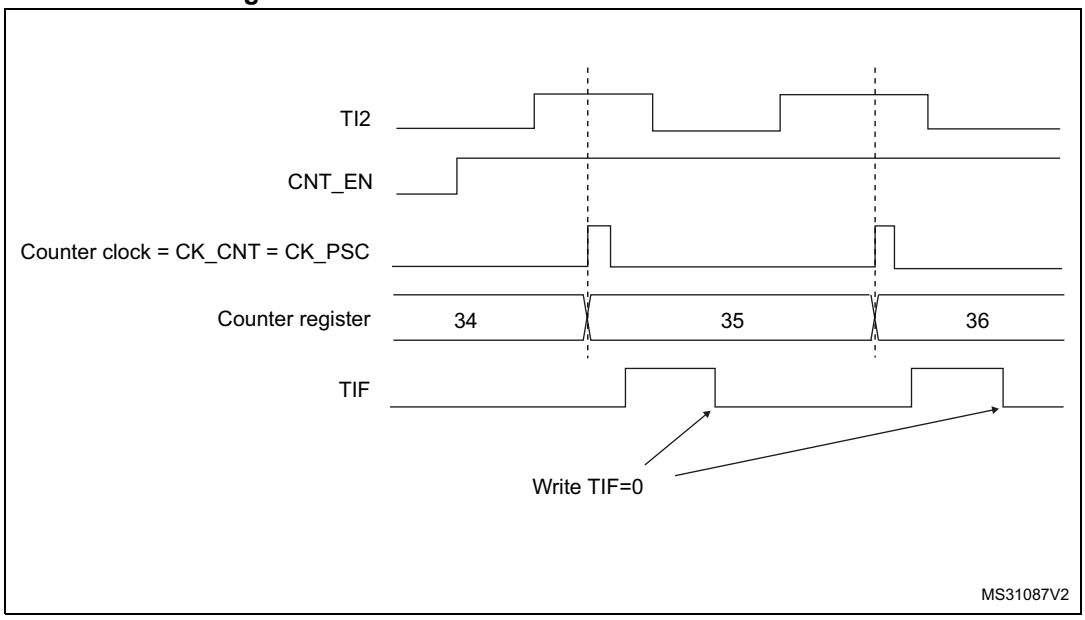

External clock source mode 2

This mode is selected by writing ECE=1 in the TIMx_SMCR register.

The counter can count at each rising or falling edge on the external trigger input ETR.

The *Figure 189* gives an overview of the external trigger input block.

Figure 189. External trigger input block

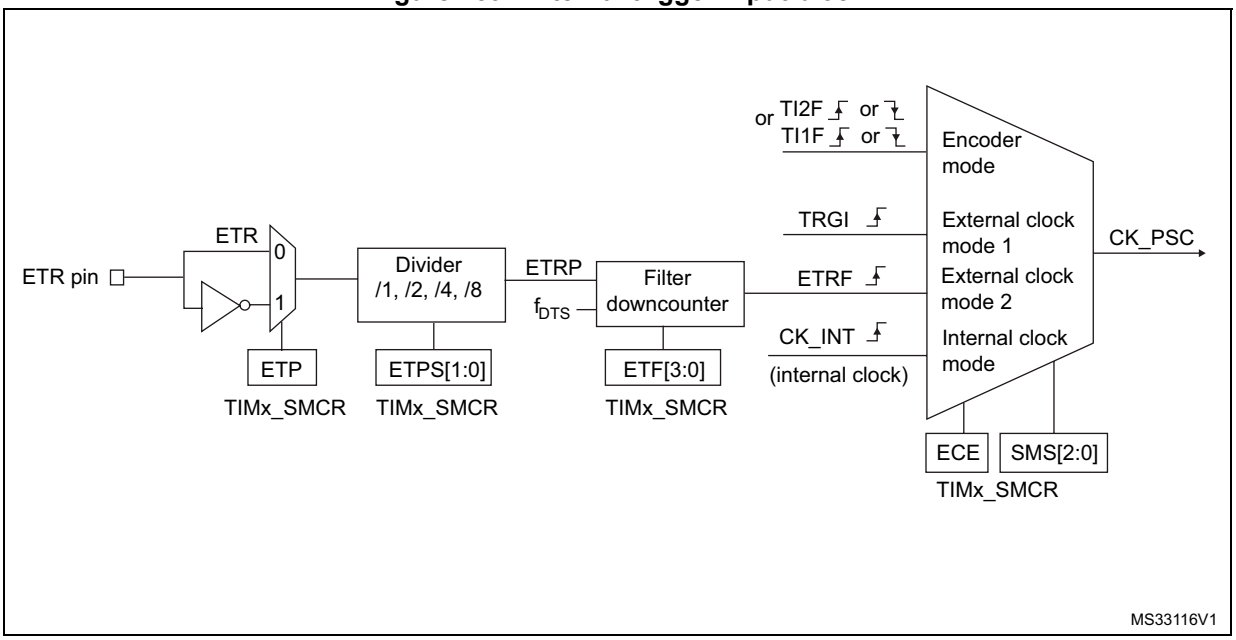

For example, to configure the upcounter to count each 2 rising edges on ETR, use the following procedure:

1. As no filter is needed in this example, write ETF[3:0]=0000 in the TIMx_SMCR register.
2. Set the prescaler by writing ETPS[1:0]=01 in the TIMx_SMCR register
3. Select rising edge detection on the ETR pin by writing ETP=0 in the TIMx_SMCR register
4. Enable external clock mode 2 by writing ECE=1 in the TIMx_SMCR register.
5. Enable the counter by writing CEN=1 in the TIMx_CR1 register.

The counter counts once each 2 ETR rising edges.

The delay between the rising edge on ETR and the actual clock of the counter is due to the resynchronization circuit on the ETRP signal.

Figure 190. Control circuit in external clock mode 2

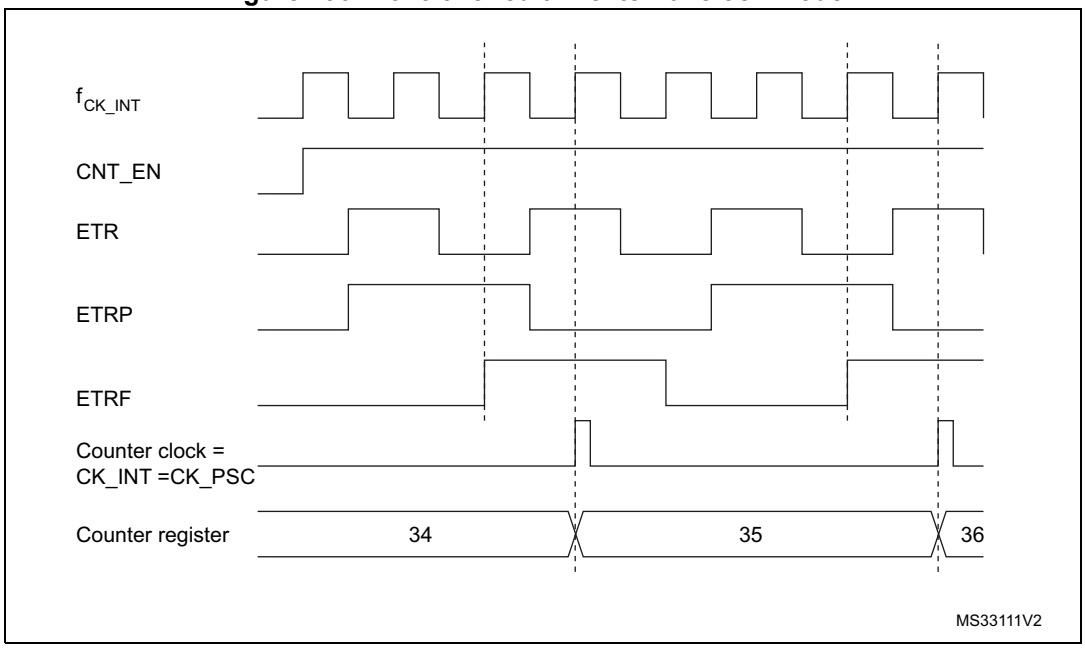

25.3.6 Capture/compare channels

Each Capture/Compare channel is built around a capture/compare register (including a shadow register), an input stage for capture (with digital filter, multiplexing, and prescaler, except for channels 5 and 6) and an output stage (with comparator and output control).

Figure 191 to *Figure 194* give an overview of one Capture/Compare channel.

The input stage samples the corresponding TIx input to generate a filtered signal TIxF. Then, an edge detector with polarity selection generates a signal (TIxFPx) which can be used as trigger input by the slave mode controller or as the capture command. It is prescaled before the capture register (ICxPS).

Figure 191. Capture/compare channel (example: channel 1 input stage)

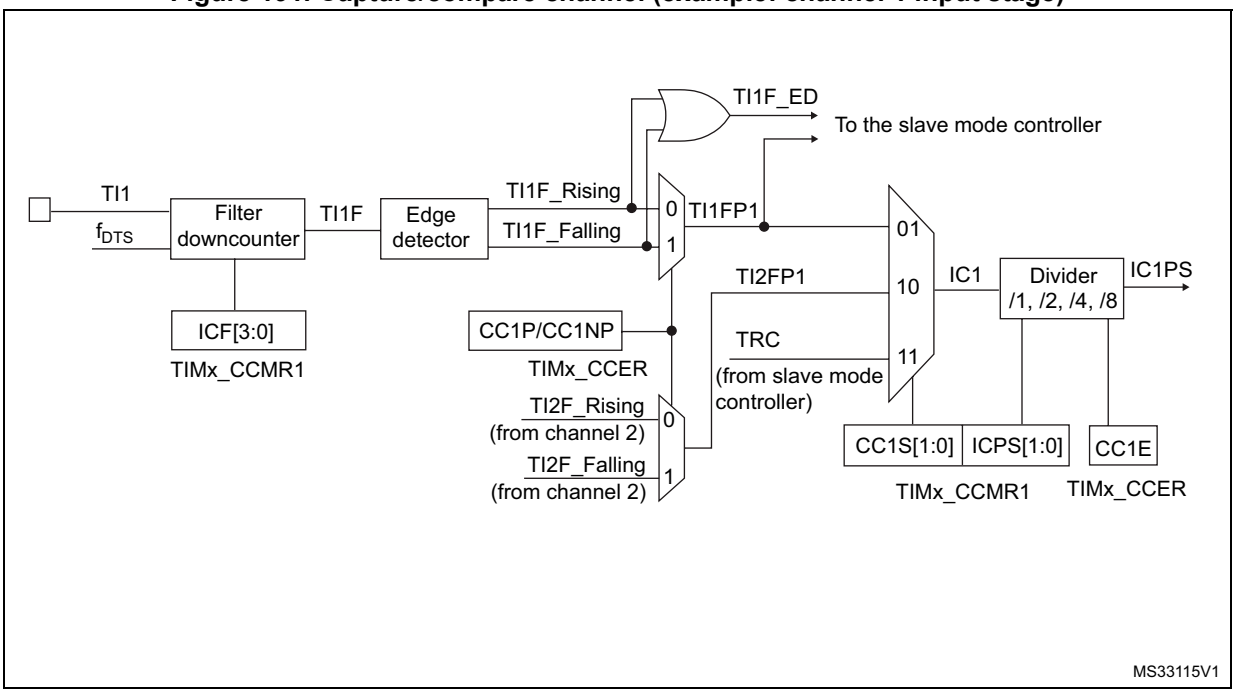

The output stage generates an intermediate waveform which is then used for reference: OCxRef (active high). The polarity acts at the end of the chain.

Figure 192. Capture/compare channel 1 main circuit

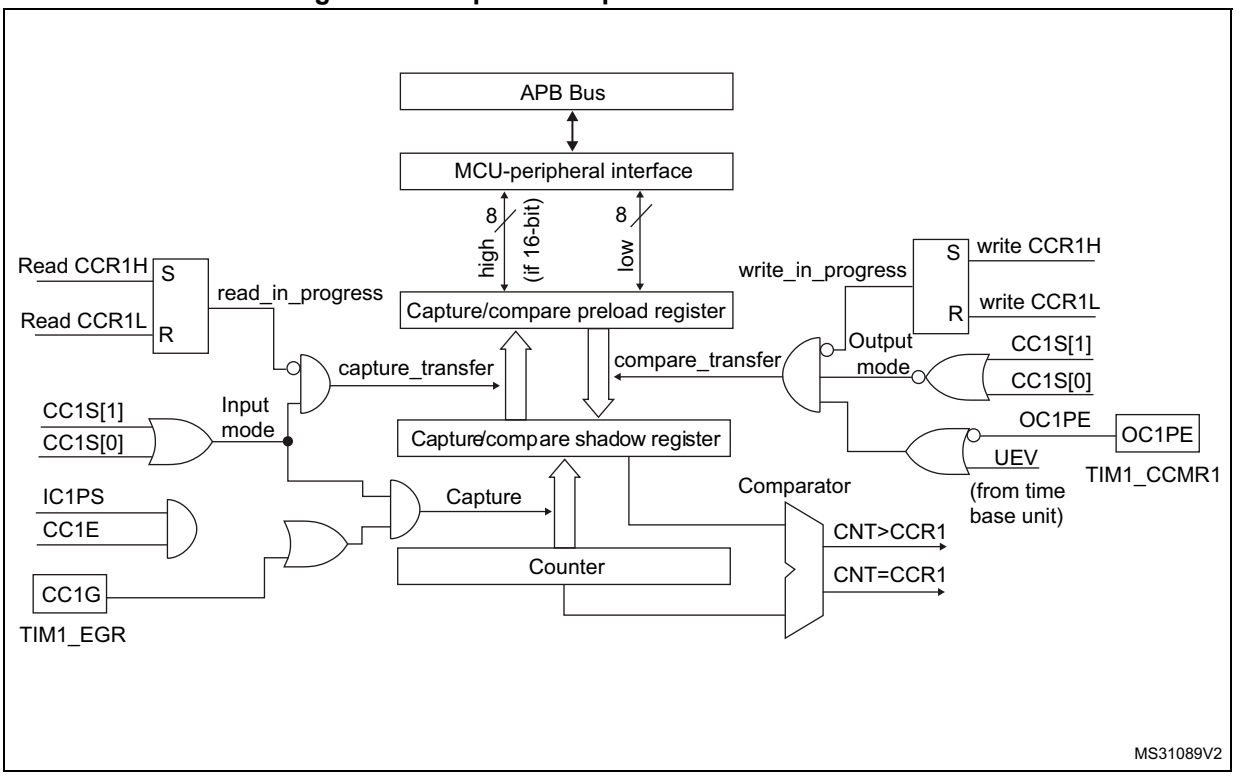

Figure 193. Output stage of capture/compare channel (channel 1, idem ch. 2 and 3)

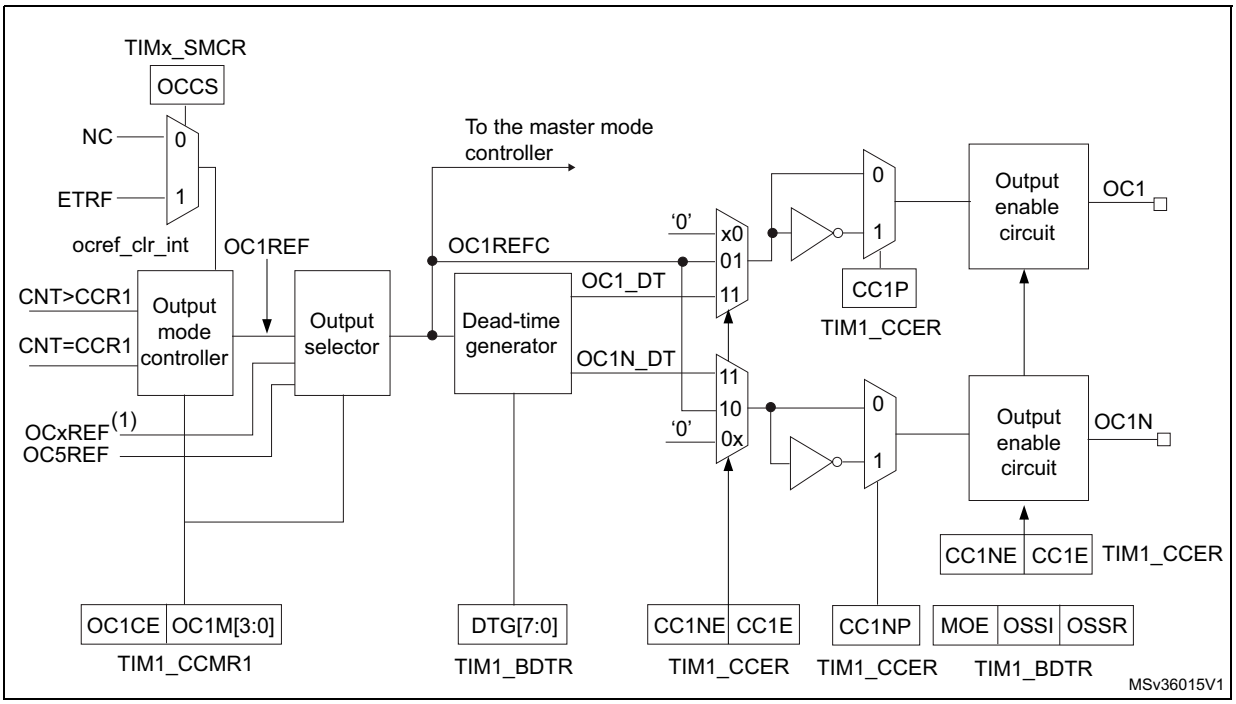

1. OCxREF, where x is the rank of the complementary channel

Figure 194. Output stage of capture/compare channel (channel 4)

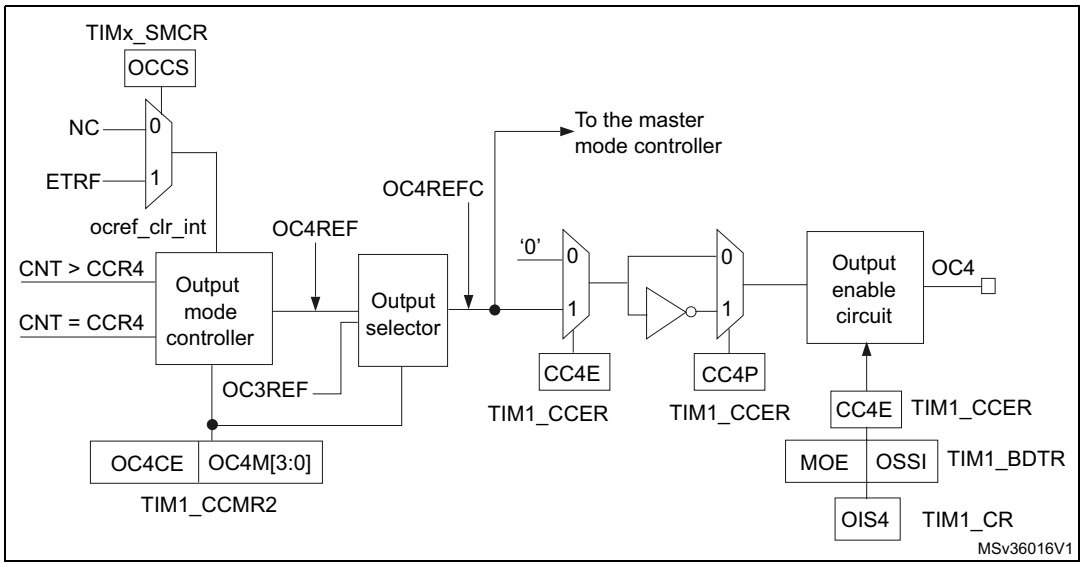

Figure 195. Output stage of capture/compare channel (channel 5, idem ch. 6)

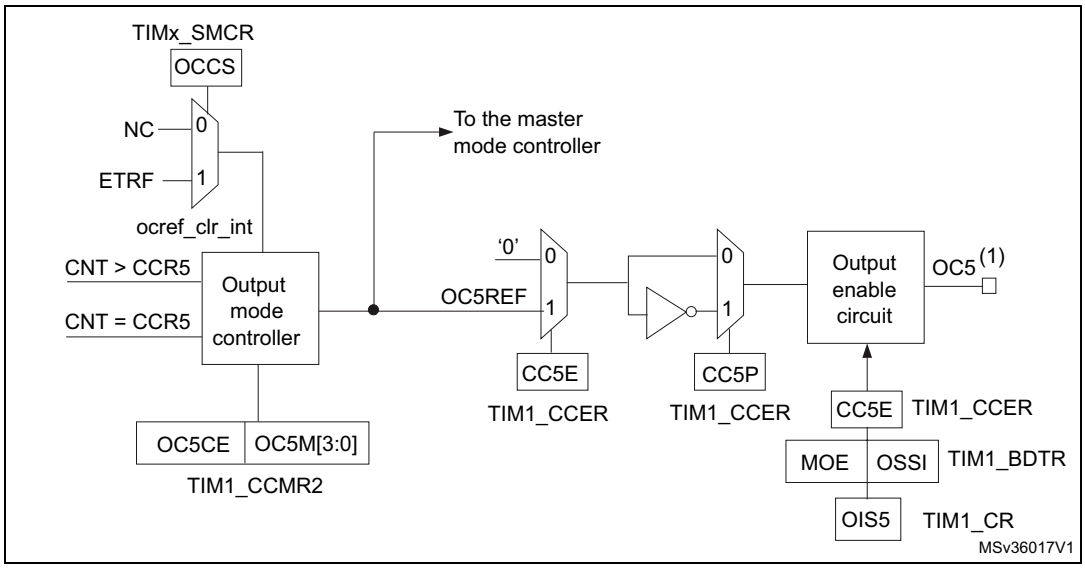

1. Not available externally.

The capture/compare block is made of one preload register and one shadow register. Write and read always access the preload register.

In capture mode, captures are actually done in the shadow register, which is copied into the preload register.

In compare mode, the content of the preload register is copied into the shadow register which is compared to the counter.

25.3.7 Input capture mode

In Input capture mode, the Capture/Compare Registers (TIMx_CCRx) are used to latch the value of the counter after a transition detected by the corresponding ICx signal. When a capture occurs, the corresponding CCXIF flag (TIMx_SR register) is set and an interrupt or a DMA request can be sent if they are enabled. If a capture occurs while the CCxIF flag was already high, then the over-capture flag CCxOF (TIMx_SR register) is set. CCxIF can be cleared by software by writing it to ‘0’ or by reading the captured data stored in the TIMx_CCRx register. CCxOF is cleared when you write it to ‘0’.

The following example shows how to capture the counter value in TIMx_CCR1 when TI1 input rises. To do this, use the following procedure:

- Select the active input: TIMx_CCR1 must be linked to the TI1 input, so write the CC1S bits to 01 in the TIMx_CCMR1 register. As soon as CC1S becomes different from 00, the channel is configured in input and the TIMx_CCR1 register becomes read-only.
- Program the input filter duration you need with respect to the signal you connect to the timer (when the input is one of the TIx (ICxF bits in the TIMx_CCMRx register). Let’s imagine that, when toggling, the input signal is not stable during at must 5 internal clock cycles. We must program a filter duration longer than these 5 clock cycles. We can validate a transition on TI1 when 8 consecutive samples with the new level have been detected (sampled at f_{DTS} frequency). Then write IC1F bits to 0011 in the TIMx_CCMR1 register.
- Select the edge of the active transition on the TI1 channel by writing CC1P and CC1NP bits to 0 in the TIMx_CCER register (rising edge in this case).
- Program the input prescaler. In our example, we wish the capture to be performed at each valid transition, so the prescaler is disabled (write IC1PS bits to ‘00’ in the TIMx_CCMR1 register).
- Enable capture from the counter into the capture register by setting the CC1E bit in the TIMx_CCER register.
- If needed, enable the related interrupt request by setting the CC1IE bit in the TIMx_DIER register, and/or the DMA request by setting the CC1DE bit in the TIMx_DIER register.

When an input capture occurs:

- The TIMx_CCR1 register gets the value of the counter on the active transition.
- CC1IF flag is set (interrupt flag). CC1OF is also set if at least two consecutive captures occurred whereas the flag was not cleared.
- An interrupt is generated depending on the CC1IE bit.
- A DMA request is generated depending on the CC1DE bit.

In order to handle the overcapture, it is recommended to read the data before the overcapture flag. This is to avoid missing an overcapture which could happen after reading the flag and before reading the data.

Note: IC interrupt and/or DMA requests can be generated by software by setting the corresponding CCxG bit in the TIMx_EGR register.

25.3.8 PWM input mode

This mode is a particular case of input capture mode. The procedure is the same except:

- Two ICx signals are mapped on the same TIx input.
- These 2 ICx signals are active on edges with opposite polarity.
- One of the two TIxFP signals is selected as trigger input and the slave mode controller is configured in reset mode.

For example, the user can measure the period (in TIMx_CCR1 register) and the duty cycle (in TIMx_CCR2 register) of the PWM applied on TI1 using the following procedure (depending on CK_INT frequency and prescaler value):

- Select the active input for TIMx_CCR1: write the CC1S bits to 01 in the TIMx_CCMR1 register (TI1 selected).
- Select the active polarity for TI1FP1 (used both for capture in TIMx_CCR1 and counter clear): write the CC1P and CC1NP bits to ‘0’ (active on rising edge).
- Select the active input for TIMx_CCR2: write the CC2S bits to 10 in the TIMx_CCMR1 register (TI1 selected).
- Select the active polarity for TI1FP2 (used for capture in TIMx_CCR2): write the CC2P and CC2NP bits to CC2P/CC2NP=’10’ (active on falling edge).
- Select the valid trigger input: write the TS bits to 101 in the TIMx_SMCR register (TI1FP1 selected).
- Configure the slave mode controller in reset mode: write the SMS bits to 0100 in the TIMx_SMCR register.
- Enable the captures: write the CC1E and CC2E bits to ‘1’ in the TIMx_CCER register.

Figure 196. PWM input mode timing

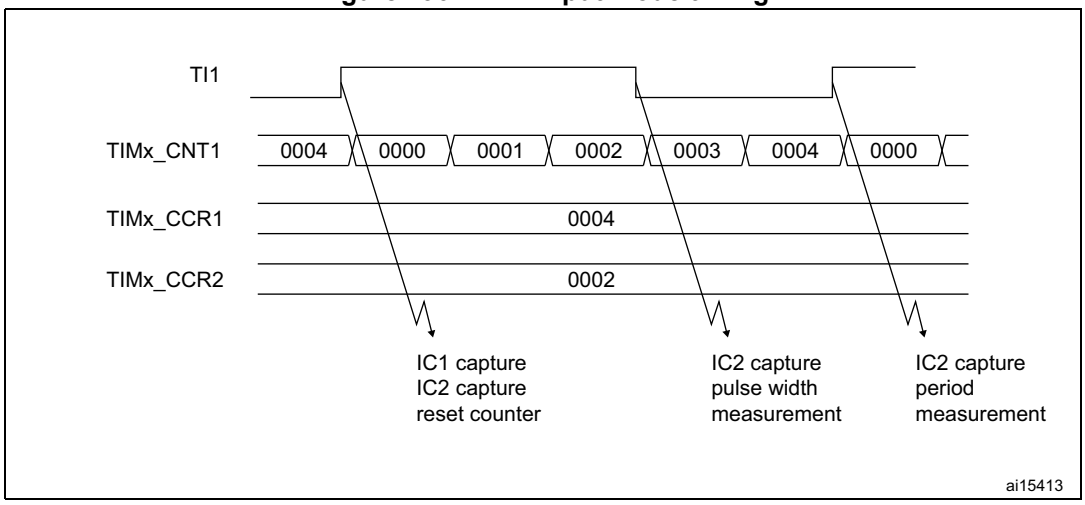

25.3.9 Forced output mode

In output mode (CCxS bits = 00 in the TIMx_CCMRx register), each output compare signal (OCxREF and then OCx/OCxN) can be forced to active or inactive level directly by software, independently of any comparison between the output compare register and the counter.

To force an output compare signal (OCXREF/OCx) to its active level, user just needs to write 0101 in the OCxM bits in the corresponding TIMx_CCMRx register. Thus OCXREF is

forced high (OCxREF is always active high) and OCx get opposite value to CCxP polarity bit.

For example: CCxP=0 (OCx active high) => OCx is forced to high level.

The OCxREF signal can be forced low by writing the OCxM bits to 0100 in the TIMx_CCMRx register.

Anyway, the comparison between the TIMx_CCRx shadow register and the counter is still performed and allows the flag to be set. Interrupt and DMA requests can be sent accordingly. This is described in the output compare mode section below.

25.3.10 Output compare mode

This function is used to control an output waveform or indicate when a period of time has elapsed. Channels 1 to 4 can be output, while Channel 5 and 6 are only available inside the microcontroller (for instance, for compound waveform generation or for ADC triggering).

When a match is found between the capture/compare register and the counter, the output compare function:

- Assigns the corresponding output pin to a programmable value defined by the output compare mode (OCxM bits in the TIMx_CCMRx register) and the output polarity (CCxP bit in the TIMx_CCER register). The output pin can keep its level (OCXM=0000), be set active (OCxM=0001), be set inactive (OCxM=0010) or can toggle (OCxM=0011) on match.
- Sets a flag in the interrupt status register (CCxIF bit in the TIMx_SR register).
- Generates an interrupt if the corresponding interrupt mask is set (CCXIE bit in the TIMx_DIER register).
- Sends a DMA request if the corresponding enable bit is set (CCxDE bit in the TIMx_DIER register, CCDS bit in the TIMx_CR2 register for the DMA request selection).

The TIMx_CCRx registers can be programmed with or without preload registers using the OCxPE bit in the TIMx_CCMRx register.

In output compare mode, the update event UEV has no effect on OCxREF and OCx output. The timing resolution is one count of the counter. Output compare mode can also be used to output a single pulse (in One Pulse mode).

Procedure

1. Select the counter clock (internal, external, prescaler).
2. Write the desired data in the TIMx_ARR and TIMx_CCRx registers.
3. Set the CCxIE bit if an interrupt request is to be generated.
4. Select the output mode. For example:
   - Write OCxM = 0011 to toggle OCx output pin when CNT matches CCRx
   - Write OCxPE = 0 to disable preload register
   - Write CCxP = 0 to select active high polarity
   - Write CCxE = 1 to enable the output
5. Enable the counter by setting the CEN bit in the TIMx_CR1 register.

The TIMx_CCRx register can be updated at any time by software to control the output waveform, provided that the preload register is not enabled (OCxPE='0', else TIMx_CCRx

shadow register is updated only at the next update event UEV). An example is given in *Figure 197*.

Figure 197. Output compare mode, toggle on OC1

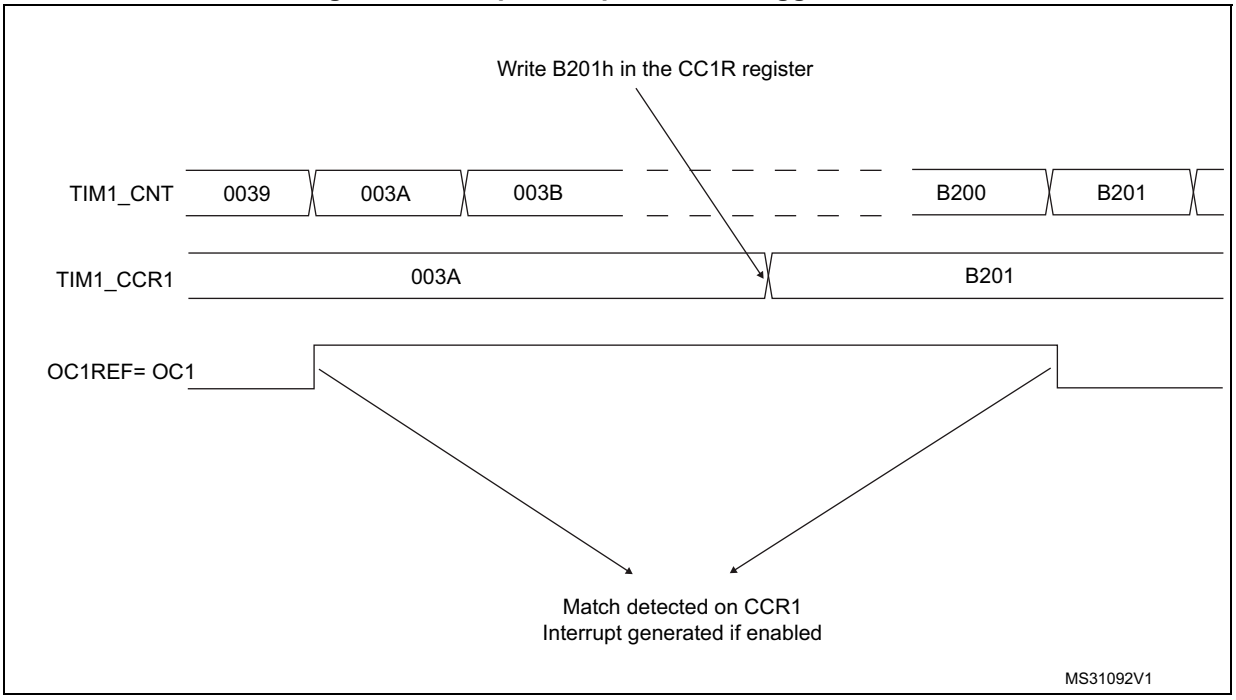

25.3.11 PWM mode

Pulse Width Modulation mode allows you to generate a signal with a frequency determined by the value of the TIMx_ARR register and a duty cycle determined by the value of the TIMx_CCRx register.

The PWM mode can be selected independently on each channel (one PWM per OCx output) by writing ‘0110’ (PWM mode 1) or ‘0111’ (PWM mode 2) in the OCxM bits in the TIMx_CCMRx register. You must enable the corresponding preload register by setting the OCxPE bit in the TIMx_CCMRx register, and eventually the auto-reload preload register (in upcounting or center-aligned modes) by setting the ARPE bit in the TIMx_CR1 register.

As the preload registers are transferred to the shadow registers only when an update event occurs, before starting the counter, you have to initialize all the registers by setting the UG bit in the TIMx_EGR register.

OCx polarity is software programmable using the CCxP bit in the TIMx_CCER register. It can be programmed as active high or active low. OCx output is enabled by a combination of the CCxE, CCxNE, MOE, OSSI and OSSR bits (TIMx_CCER and TIMx_BDTR registers). Refer to the TIMx_CCER register description for more details.

In PWM mode (1 or 2), TIMx_CNT and TIMx_CCRx are always compared to determine whether TIMx_CCRx ≤ TIMx_CNT or TIMx_CNT ≤ TIMx_CCRx (depending on the direction of the counter).

The timer is able to generate PWM in edge-aligned mode or center-aligned mode depending on the CMS bits in the TIMx_CR1 register.

PWM edge-aligned mode

- Upcounting configuration

  Upcounting is active when the DIR bit in the TIMx_CR1 register is low. Refer to the *Upcounting mode on page 623*.

  In the following example, we consider PWM mode 1. The reference PWM signal OCxREF is high as long as TIMx_CNT < TIMx_CCRx else it becomes low. If the compare value in TIMx_CCRx is greater than the auto-reload value (in TIMx_ARR) then OCxREF is held at ‘1’. If the compare value is 0 then OCxRef is held at ‘0’. *Figure 198* shows some edge-aligned PWM waveforms in an example where TIMx_ARR=8.

Figure 198. Edge-aligned PWM waveforms (ARR=8)

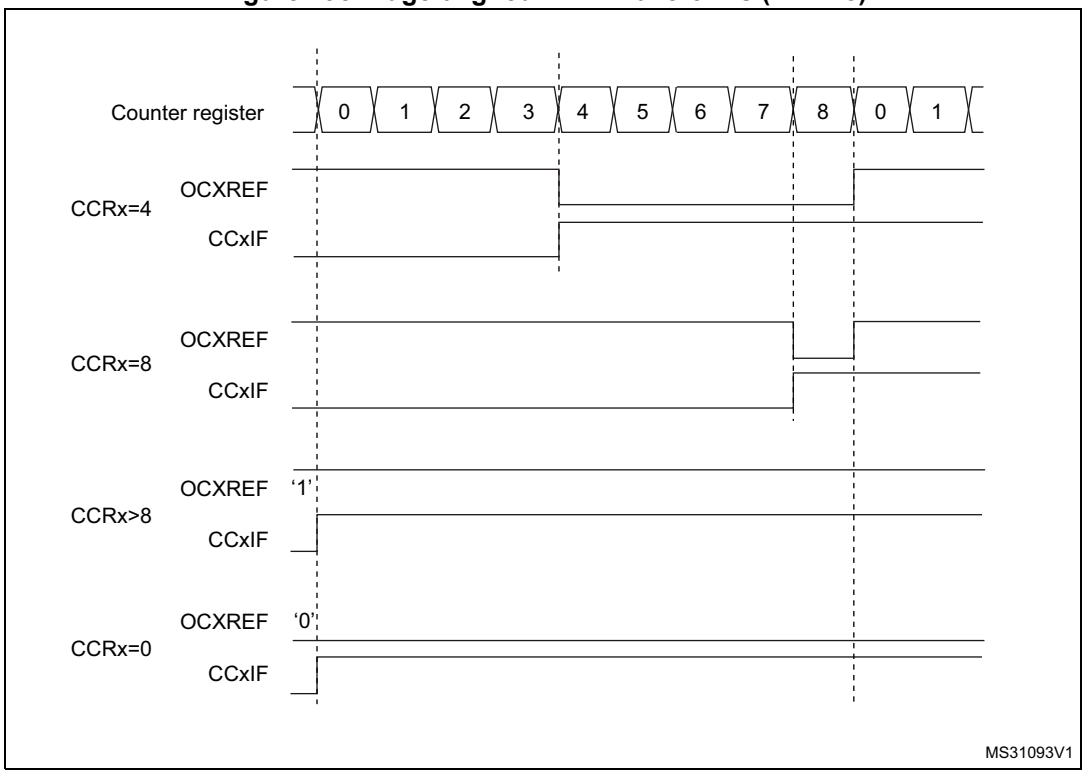

- Downcounting configuration

  Downcounting is active when DIR bit in TIMx_CR1 register is high. Refer to the *Downcounting mode on page 627*

  In PWM mode 1, the reference signal OCxRef is low as long as TIMx_CNT > TIMx_CCRx else it becomes high. If the compare value in TIMx_CCRx is greater than the auto-reload value in TIMx_ARR, then OCxREF is held at ‘1’. 0% PWM is not possible in this mode.

PWM center-aligned mode

Center-aligned mode is active when the CMS bits in TIMx_CR1 register are different from ‘00’ (all the remaining configurations having the same effect on the OCxRef/OCx signals). The compare flag is set when the counter counts up, when it counts down or both when it counts up and down depending on the CMS bits configuration. The direction bit (DIR) in the TIMx_CR1 register is updated by hardware and must not be changed by software. Refer to

the *Center-aligned mode (up/down counting) on page 630*.

Figure 199 shows some center-aligned PWM waveforms in an example where:

- TIMx_ARR=8,
- PWM mode is the PWM mode 1,
- The flag is set when the counter counts down corresponding to the center-aligned mode 1 selected for CMS=01 in TIMx_CR1 register.

Figure 199. Center-aligned PWM waveforms (ARR=8)

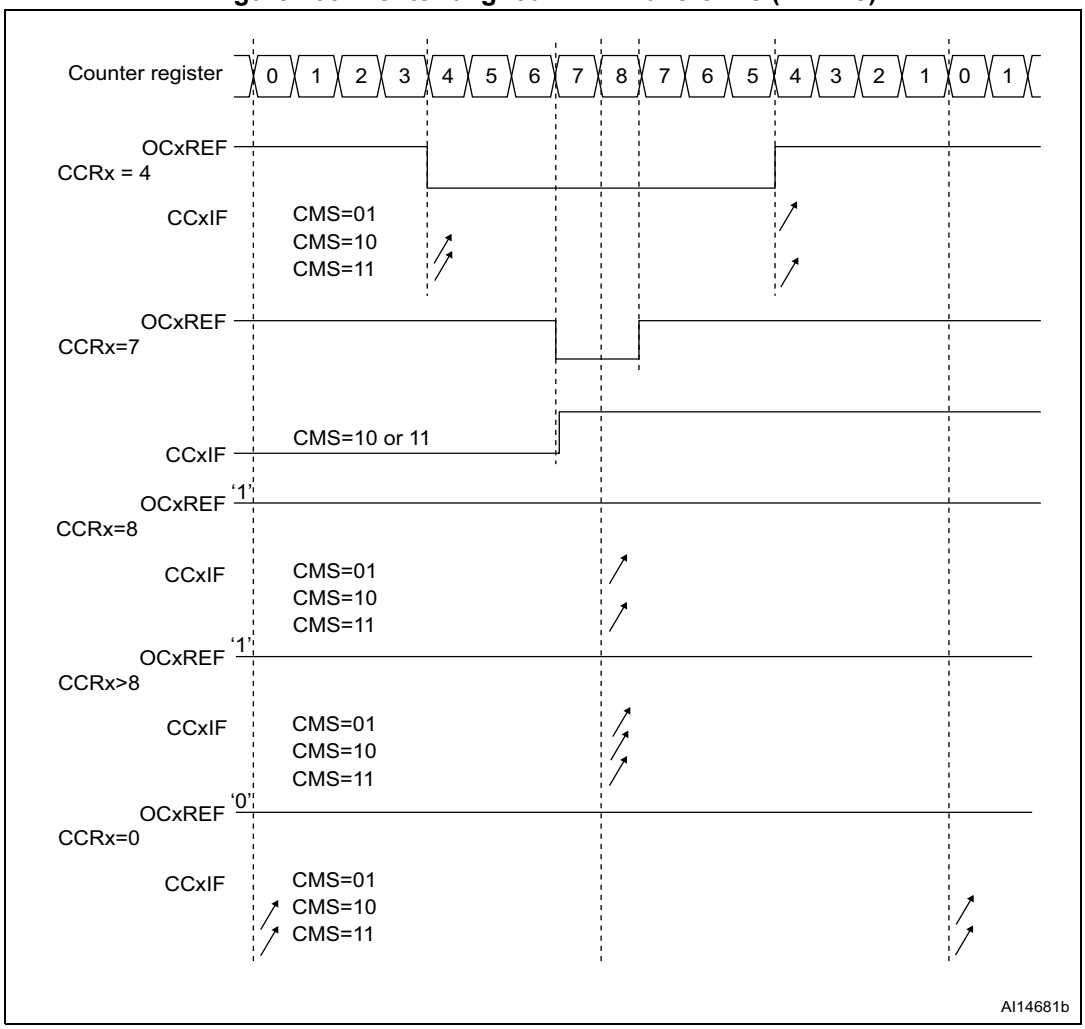

Hints on using center-aligned mode

- When starting in center-aligned mode, the current up-down configuration is used. It means that the counter counts up or down depending on the value written in the DIR bit

in the TIMx_CR1 register. Moreover, the DIR and CMS bits must not be changed at the same time by the software.

- Writing to the counter while running in center-aligned mode is not recommended as it can lead to unexpected results. In particular:
  - The direction is not updated if you write a value in the counter that is greater than the auto-reload value (TIMx_CNT>TIMx_ARR). For example, if the counter was counting up, it continues to count up.
  - The direction is updated if you write 0 or write the TIMx_ARR value in the counter but no Update Event UEV is generated.
- The safest way to use center-aligned mode is to generate an update by software (setting the UG bit in the TIMx_EGR register) just before starting the counter and not to write the counter while it is running.

25.3.12 Asymmetric PWM mode

Asymmetric mode allows two center-aligned PWM signals to be generated with a programmable phase shift. While the frequency is determined by the value of the TIMx_ARR register, the duty cycle and the phase-shift are determined by a pair of TIMx_CCRx register. One register controls the PWM during up-counting, the second during down counting, so that PWM is adjusted every half PWM cycle:

- OC1REFC (or OC2REFC) is controlled by TIMx_CCR1 and TIMx_CCR2
- OC3REFC (or OC4REFC) is controlled by TIMx_CCR3 and TIMx_CCR4

Asymmetric PWM mode can be selected independently on two channel (one OCx output per pair of CCR registers) by writing ‘1110’ (Asymmetric PWM mode 1) or ‘1111’ (Asymmetric PWM mode 2) in the OCxM bits in the TIMx_CCMRx register.

Note: The OCxM[3:0] bit field is split into two parts for compatibility reasons, the most significant bit is not contiguous with the 3 least significant ones.

When a given channel is used as asymmetric PWM channel, its complementary channel can also be used. For instance, if an OC1REFC signal is generated on channel 1 (Asymmetric PWM mode 1), it is possible to output either the OC2REF signal on channel 2, or an OC2REFC signal resulting from asymmetric PWM mode 1.

Figure 200 represents an example of signals that can be generated using Asymmetric PWM mode (channels 1 to 4 are configured in Asymmetric PWM mode 1). Together with the deadtime generator, this allows a full-bridge phase-shifted DC to DC converter to be controlled.

Figure 200. Generation of 2 phase-shifted PWM signals with 50% duty cycle

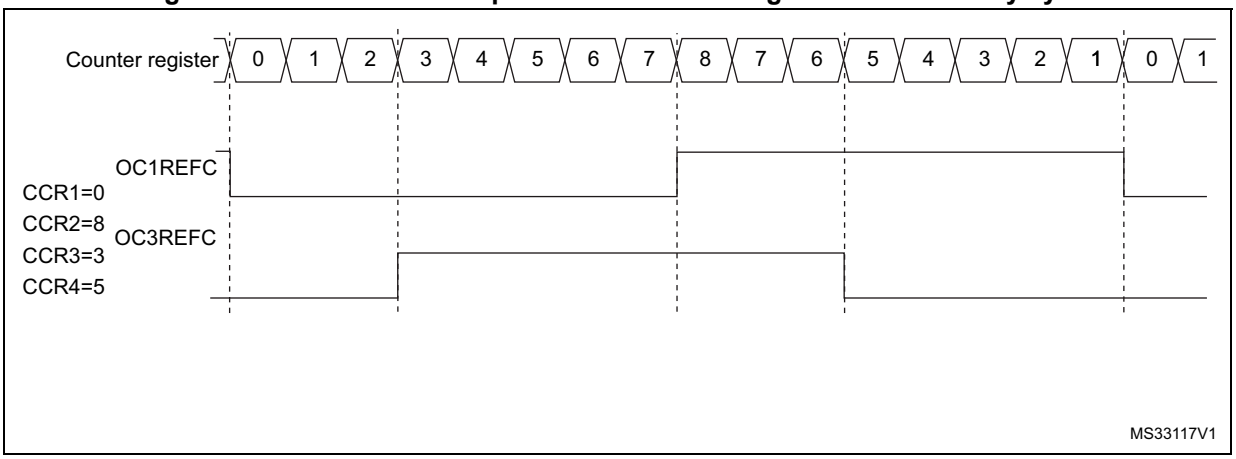

25.3.13 Combined PWM mode

Combined PWM mode allows two edge or center-aligned PWM signals to be generated with programmable delay and phase shift between respective pulses. While the frequency is determined by the value of the TIMx_ARR register, the duty cycle and delay are determined by the two TIMx_CCRx registers. The resulting signals, OCxREFC, are made of an OR or AND logical combination of two reference PWMs:

- OC1REFC (or OC2REFC) is controlled by TIMx_CCR1 and TIMx_CCR2
- OC3REFC (or OC4REFC) is controlled by TIMx_CCR3 and TIMx_CCR4

Combined PWM mode can be selected independently on two channels (one OCx output per pair of CCR registers) by writing ‘1100’ (Combined PWM mode 1) or ‘1101’ (Combined PWM mode 2) in the OCxM bits in the TIMx_CCMRx register.

When a given channel is used as combined PWM channel, its complementary channel must be configured in the opposite PWM mode (for instance, one in Combined PWM mode 1 and the other in Combined PWM mode 2).

Note: The OCxM[3:0] bit field is split into two parts for compatibility reasons, the most significant bit is not contiguous with the 3 least significant ones.

Figure 201 represents an example of signals that can be generated using Asymmetric PWM mode, obtained with the following configuration:

- Channel 1 is configured in Combined PWM mode 2,
- Channel 2 is configured in PWM mode 1,
- Channel 3 is configured in Combined PWM mode 2,
- Channel 4 is configured in PWM mode 1.

Figure 201. Combined PWM mode on channel 1 and 3

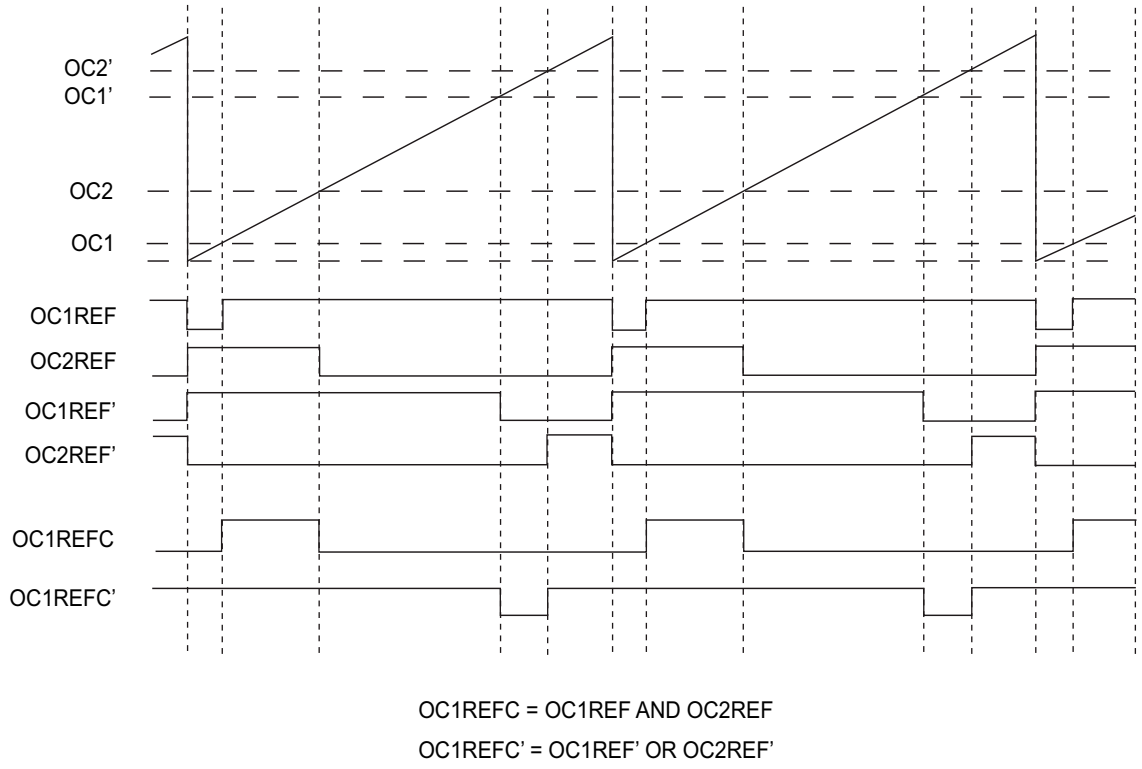

25.3.14 Combined 3-phase PWM mode

Combined 3-phase PWM mode allows one to three center-aligned PWM signals to be generated with a single programmable signal ANDed in the middle of the pulses. The OC5REF signal is used to define the resulting combined signal. The 3-bits GC5C[3:1] in the TIMx_CCR5 allow selection on which reference signal the OC5REF is combined. The resulting signals, OCxREFC, are made of an AND logical combination of two reference PWMs:

- If GC5C1 is set, OC1REFC is controlled by TIMx_CCR1 and TIMx_CCR5
- If GC5C2 is set, OC2REFC is controlled by TIMx_CCR2 and TIMx_CCR5
- If GC5C3 is set, OC3REFC is controlled by TIMx_CCR3 and TIMx_CCR5

Combined 3-phase PWM mode can be selected independently on channels 1 to 3 by setting at least one of the 3-bits GC5C[3:1].

Figure 202. 3-phase combined PWM signals with multiple trigger pulses per period

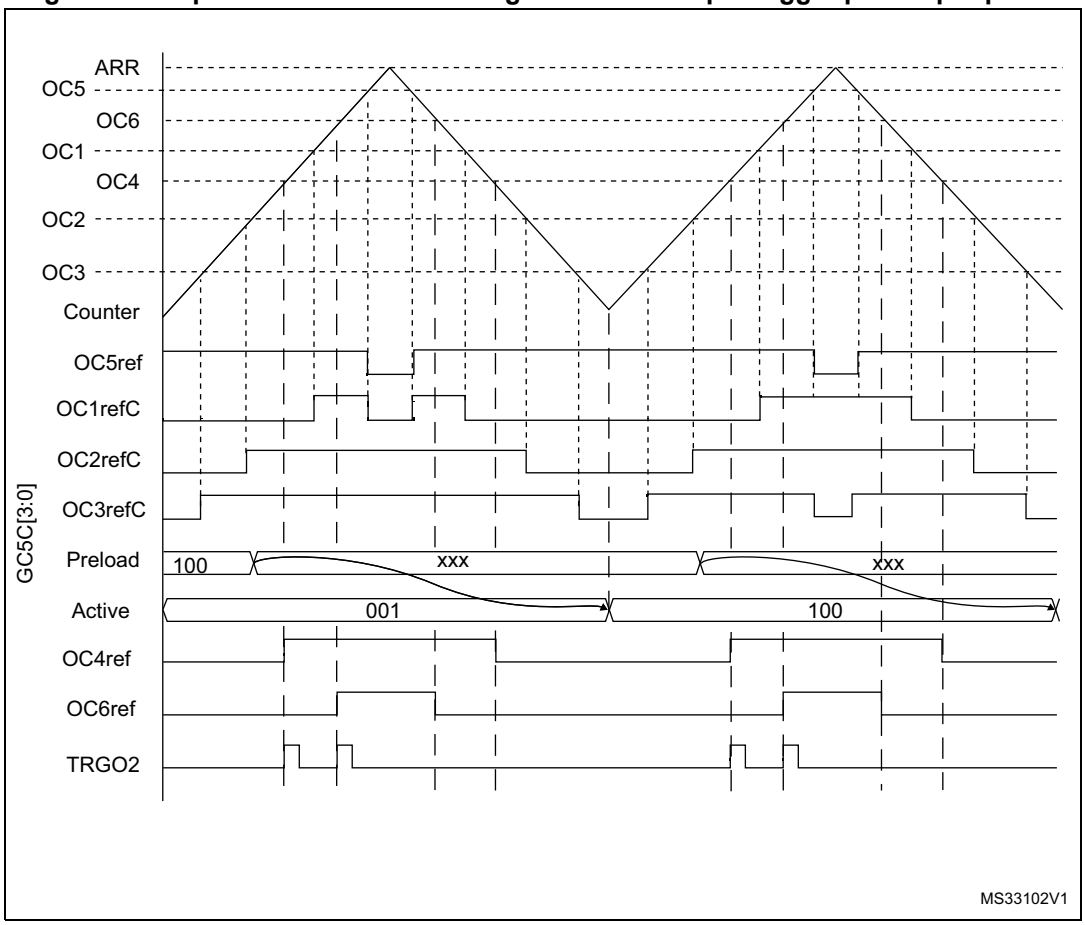

The TRGO2 waveform shows how the ADC can be synchronized on given 3-phase PWM signals. Please refer to *Section 25.3.27: ADC synchronization* for more details.

25.3.15 Complementary outputs and dead-time insertion

The advanced-control timers (TIM1) can output two complementary signals and manage the switching-off and the switching-on instants of the outputs.

This time is generally known as dead-time and you have to adjust it depending on the devices you have connected to the outputs and their characteristics (intrinsic delays of level-shifters, delays due to power switches...)

You can select the polarity of the outputs (main output OCx or complementary OCxN) independently for each output. This is done by writing to the CCxP and CCxNP bits in the TIMx_CCER register.

The complementary signals OCx and OCxN are activated by a combination of several control bits: the CCxE and CCxNE bits in the TIMx_CCER register and the MOE, OISx, OISxN, OSSI and OSSR bits in the TIMx_BDTR and TIMx_CR2 registers. Refer to *Table 112: Output control bits for complementary OCx and OCxN channels with break feature on page 698* for more details. In particular, the dead-time is activated when switching to the idle state (MOE falling down to 0).

Dead-time insertion is enabled by setting both CCxE and CCxNE bits, and the MOE bit if the break circuit is present. There is one 10-bit dead-time generator for each channel. From a reference waveform OCxREF, it generates 2 outputs OCx and OCxN. If OCx and OCxN are active high:

- The OCx output signal is the same as the reference signal except for the rising edge, which is delayed relative to the reference rising edge.
- The OCxN output signal is the opposite of the reference signal except for the rising edge, which is delayed relative to the reference falling edge.

If the delay is greater than the width of the active output (OCx or OCxN) then the corresponding pulse is not generated.

The following figures show the relationships between the output signals of the dead-time generator and the reference signal OCxREF. (we suppose CCxP=0, CCxNP=0, MOE=1, CCxE=1 and CCxNE=1 in these examples)

Figure 203. Complementary output with dead-time insertion

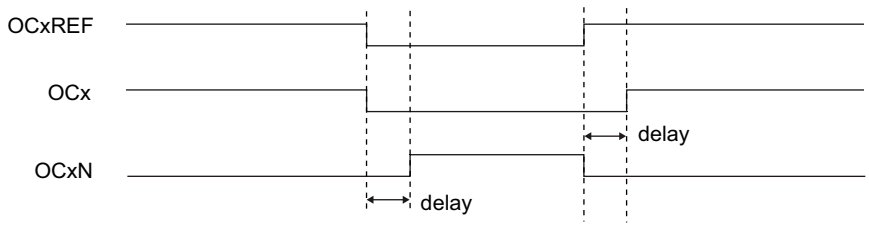

Figure 204. Dead-time waveforms with delay greater than the negative pulse

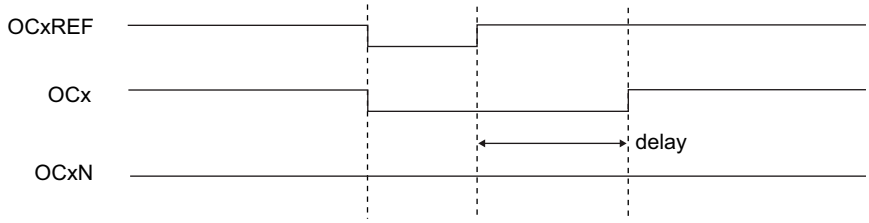

Figure 205. Dead-time waveforms with delay greater than the positive pulse

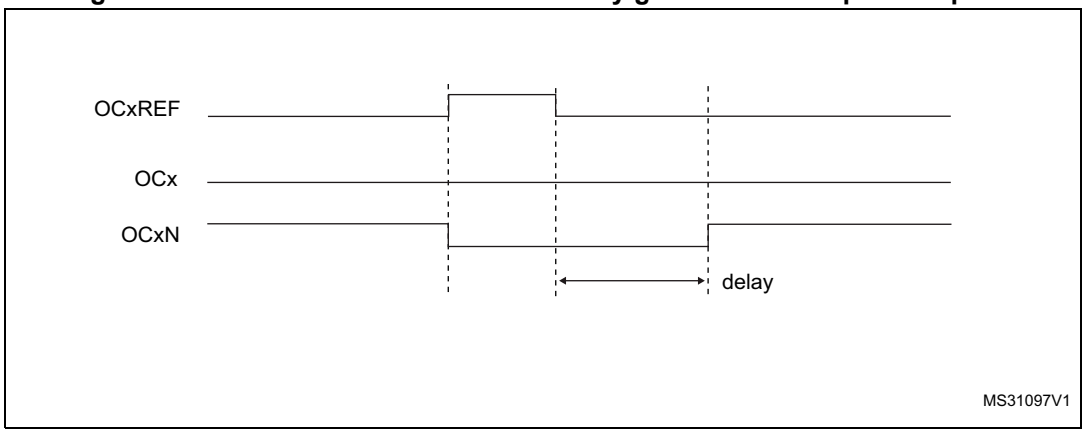

The dead-time delay is the same for each of the channels and is programmable with the DTG bits in the TIMx_BDTR register. Refer to *Section 25.4.18: TIM1 break and dead-time register (TIMx_BDTR)* for delay calculation.

Re-directing OCxREF to OCx or OCxN

In output mode (forced, output compare or PWM), OCxREF can be re-directed to the OCx output or to OCxN output by configuring the CCxE and CCxNE bits in the TIMx_CCER register.

This allows you to send a specific waveform (such as PWM or static active level) on one output while the complementary remains at its inactive level. Other alternative possibilities are to have both outputs at inactive level or both outputs active and complementary with dead-time.

Note: When only OCxN is enabled (CCxE=0, CCxNE=1), it is not complemented and becomes active as soon as OCxREF is high. For example, if CCxNP=0 then OCxN=OCxRef. On the other hand, when both OCx and OCxN are enabled (CCxE=CCxNE=1) OCx becomes active when OCxREF is high whereas OCxN is complemented and becomes active when OCxREF is low.

25.3.16 Using the break function

The purpose of the break function is to protect power switches driven by PWM signals generated with the TIM1 timer. The two break inputs are usually connected to fault outputs of power stages and 3-phase inverters. When activated, the break circuitry shuts down the PWM outputs and forces them to a predefined safe state. A number of internal MCU events can also be selected to trigger an output shut-down.

The break features two channels. A break channel which gathers both system-level fault (clock failure, parity error,...) and application fault (from input pins and built-in comparator), and can force the outputs to a predefined level (either active or inactive) after a deadtime duration. A break2 channel which only includes application faults and is able to force the outputs to an inactive state.

The output enable signal and output levels during break are depending on several control bits:

- the MOE bit in TIMx_BDTR register allows to enable /disable the outputs by software and is reset in case of break or break2 event.
- the OSSI bit in the TIMx_BDTR register defines whether the timer controls the output in inactive state or releases the control to the GPIO controller (typically to have it in Hi-Z mode)
- the OISx and OISxN bits in the TIMx_CR2 register which are setting the output shut-down level, either active or inactive. The OCx and OCxN outputs cannot be set both to active level at a given time, whatever the OISx and OISxN values. Refer to *Table 112: Output control bits for complementary OCx and OCxN channels with break feature on page 698* for more details.

When exiting from reset, the break circuit is disabled and the MOE bit is low. You can enable the break functions by setting the BKE and BKE2 bits in the TIMx_BDTR register. The break input polarities can be selected by configuring the BKP and BKP2 bits in the same register. BKEx and BKPx can be modified at the same time. When the BKEx and BKPx bits are written, a delay of 1 APB clock cycle is applied before the writing is effective. Consequently, it is necessary to wait 1 APB clock period to correctly read back the bit after the write operation.

Because MOE falling edge can be asynchronous, a resynchronization circuit has been inserted between the actual signal (acting on the outputs) and the synchronous control bit (accessed in the TIMx_BDTR register). It results in some delays between the asynchronous and the synchronous signals. In particular, if you write MOE to 1 whereas it was low, you must insert a delay (dummy instruction) before reading it correctly. This is because you write the asynchronous signal and read the synchronous signal.

The break can be generated from multiple sources which can be individually enabled and with programmable edge sensitivity, using the TIMx_OR2 and TIMx_OR3 registers.

The source for break (BRK) channel is:

- An external source connected to one of the BKIN pin (as per selection done in the AFIO controller), with polarity selection and optional digital filtering
- An internal source:
  - the Cortex®-M4 LOCKUP output
  - the PVD output
  - the SRAM parity error signal
  - a flash ECC error
  - a clock failure event generated by the CSS detector
  - the output from a comparator, with polarity selection and optional digital filtering

The source for break2 (BRK2) can be:

- An external source connected to one of the BKIN pin (as per selection done in the AFIO controller), with polarity selection and optional digital filtering
- An internal source coming from a comparator output.

Break events can also be generated by software using BG and B2G bits in the TIMx_EGR register.

All sources are ORed before entering the timer BRK or BRK2 inputs, as per *Figure 206* below.

Figure 206. Break and Break2 circuitry overview

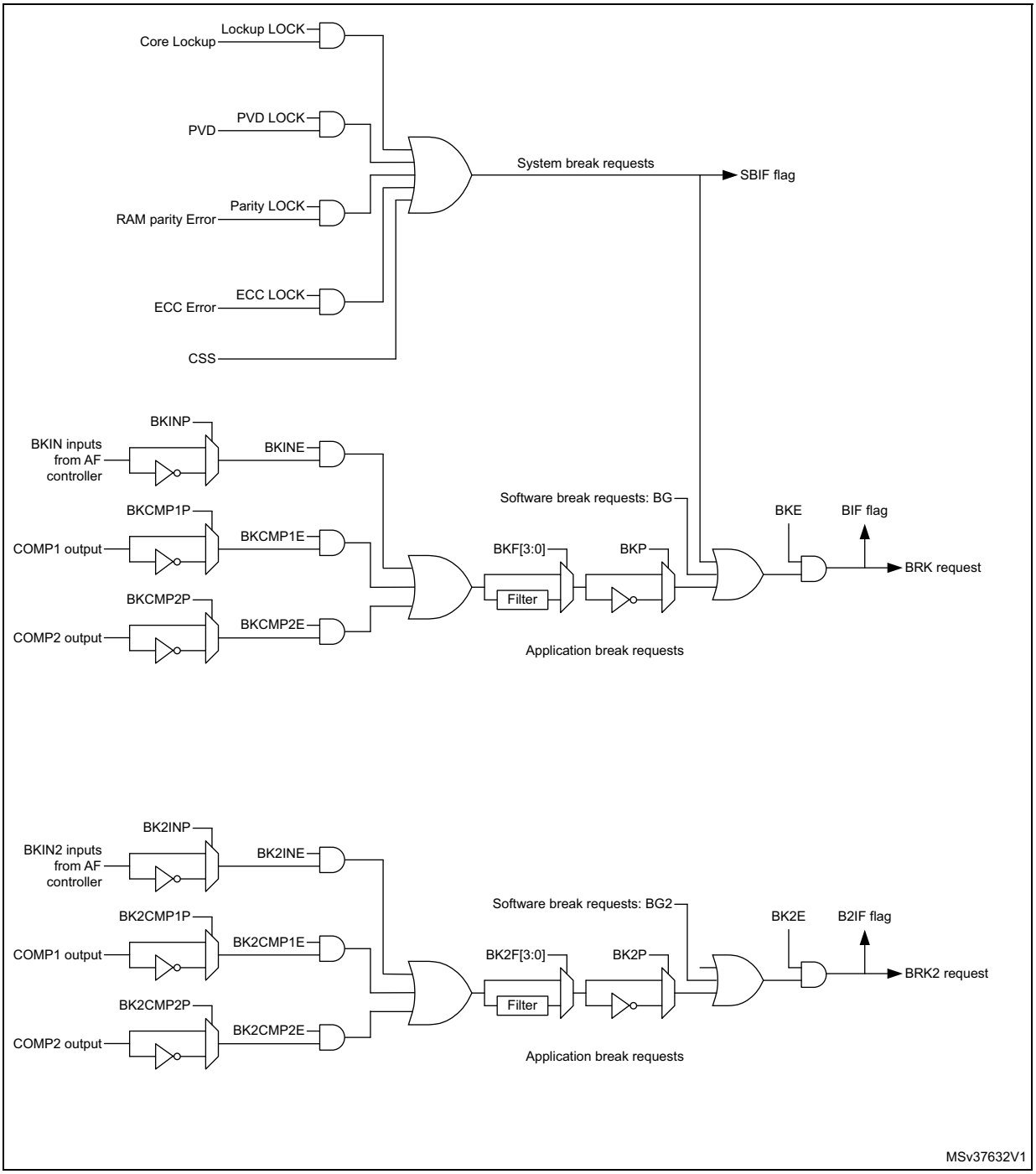

Note: An asynchronous (clockless) operation is only guaranteed when the programmable filter is disabled. If it is enabled, a fail safe clock mode (for example by using the internal PLL and/or the CSS) must be used to guarantee that break events are handled.

When one of the breaks occurs (selected level on one of the break inputs):

- The MOE bit is cleared asynchronously, putting the outputs in inactive state, idle state or even releasing the control to the GPIO controller (selected by the OSSI bit). This feature is enabled even if the MCU oscillator is off.
- Each output channel is driven with the level programmed in the OISx bit in the TIMx_CR2 register as soon as MOE=0. If OSSI=0, the timer releases the output control (taken over by the GPIO controller), otherwise the enable output remains high.
- When complementary outputs are used:
  - The outputs are first put in inactive state (depending on the polarity). This is done asynchronously so that it works even if no clock is provided to the timer.
  - If the timer clock is still present, then the dead-time generator is reactivated in order to drive the outputs with the level programmed in the OISx and OISxN bits after a dead-time. Even in this case, OCx and OCxN cannot be driven to their active level together. Note that because of the resynchronization on MOE, the dead-time duration is slightly longer than usual (around 2 ck_tim clock cycles).
  - If OSSI=0, the timer releases the output control (taken over by the GPIO controller which forces a Hi-Z state), otherwise the enable outputs remain or become high as soon as one of the CCxE or CCxNE bits is high.
- The break status flag (SBIF, BIF and B2IF bits in the TIMx_SR register) is set. An interrupt is generated if the BIE bit in the TIMx_DIER register is set. A DMA request can be sent if the BDE bit in the TIMx_DIER register is set.
- If the AOE bit in the TIMx_BDTR register is set, the MOE bit is automatically set again at the next update event (UEV). As an example, this can be used to perform a regulation. Otherwise, MOE remains low until the application sets it to ‘1’ again. In this case, it can be used for security and you can connect the break input to an alarm from power drivers, thermal sensors or any security components.

Note: The break inputs are active on level. Thus, the MOE cannot be set while the break input is active (neither automatically nor by software). In the meantime, the status flag BIF and B2IF cannot be cleared.

In addition to the break input and the output management, a write protection has been implemented inside the break circuit to safeguard the application. It allows to freeze the configuration of several parameters (dead-time duration, OCx/OCxN polarities and state when disabled, OCxM configurations, break enable and polarity). The application can choose from 3 levels of protection selected by the LOCK bits in the TIMx_BDTR register. Refer to *Section 25.4.18: TIM1 break and dead-time register (TIMx_BDTR)*. The LOCK bits can be written only once after an MCU reset.

Figure 207 shows an example of behavior of the outputs in response to a break.

Figure 207. Various output behavior in response to a break event on BRK (OSSI = 1)

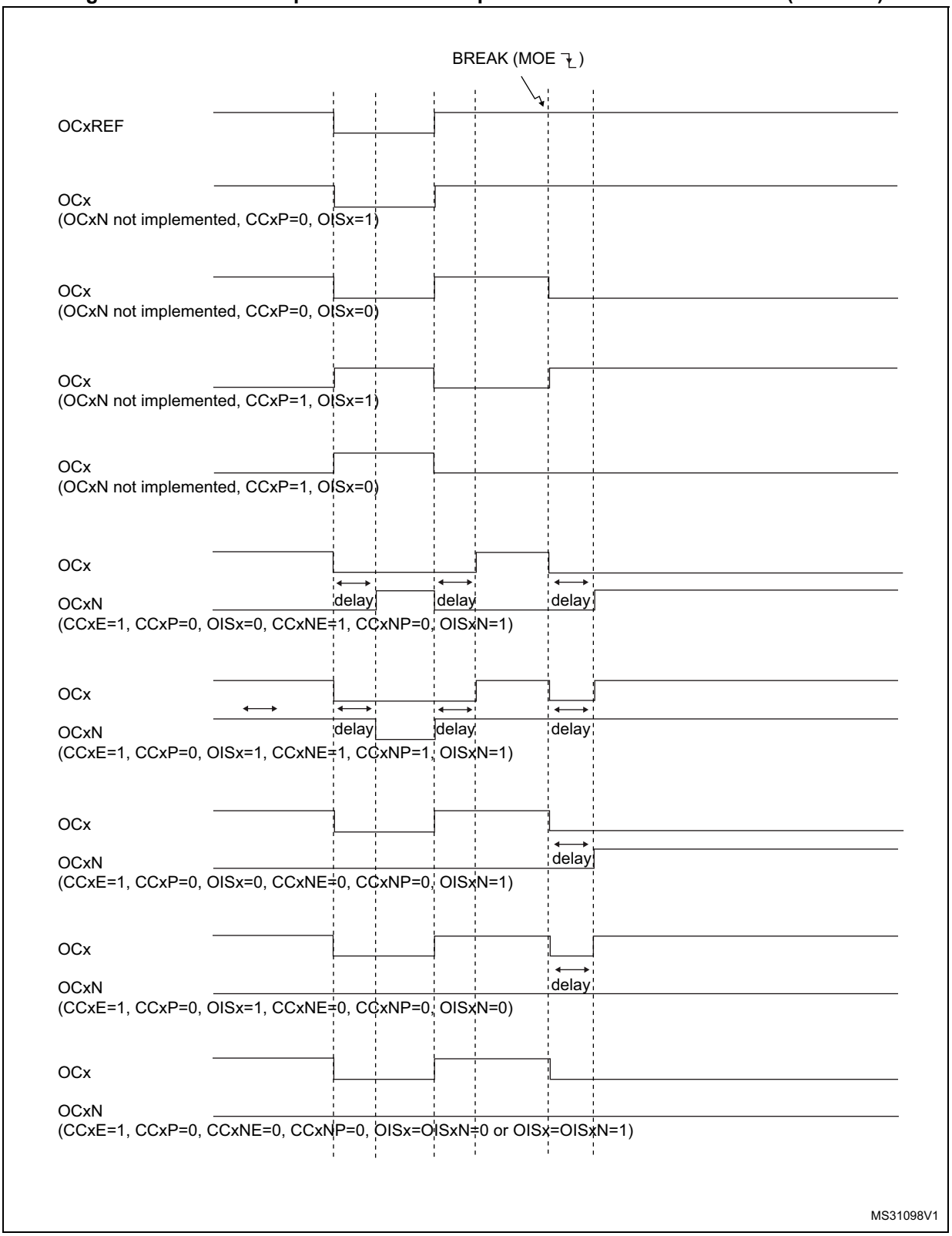

The two break inputs have different behaviors on timer outputs:

- The BRK input can either disable (inactive state) or force the PWM outputs to a predefined safe state.
- BRK2 can only disable (inactive state) the PWM outputs.

The BRK has a higher priority than BRK2 input, as described in *Table 109*.

Note: BRK2 must only be used with OSSR = OSSI = 1.

Table 109. Behavior of timer outputs versus BRK/BRK2 inputs

BRK	BRK2	Timer outputs state	Typical use case	
			OCxN output (low side switches)	OCx output (high side switches)
Active	X	– Inactive then forced output state (after a deadtime) – Outputs disabled if OSSI = 0 (control taken over by GPIO logic)	ON after deadtime insertion	OFF
Inactive	Active	Inactive	OFF	OFF

Figure 208 gives an example of OCx and OCxN output behavior in case of active signals on BRK and BRK2 inputs. In this case, both outputs have active high polarities (CCxP = CCxNP = 0 in TIMx_CCER register).

Figure 208. PWM output state following BRK and BRK2 pins assertion (OSSI=1)

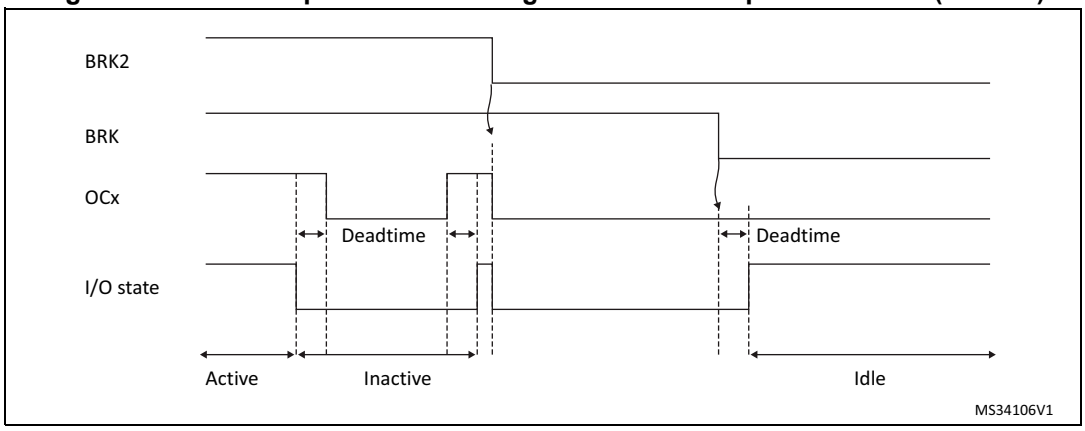

Figure 209. PWM output state following BRK assertion (OSSI=0)

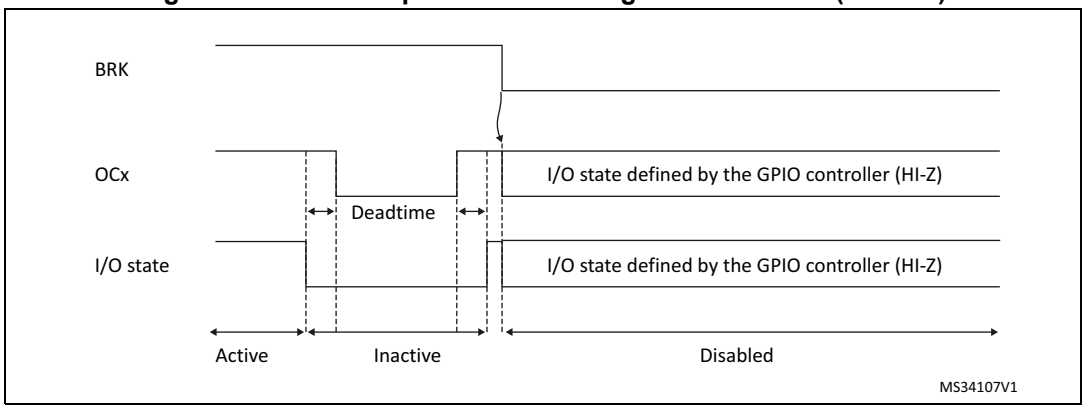

25.3.17 Bidirectional break inputs

Beside regular digital break inputs and internal break events coming from the comparators, the timer 1 and 8 are featuring bidirectional break inputs/outputs combining the two sources, as represented on *Figure 210*.

The TIMx_BKINy_COMPz pins are combining the COMPz output (to be configured in open drain) and the Timerx's TIMx_BKINy input. They allow to have:

- A global break information available for external MCUs or gate drivers shut down inputs, with a single-pin.

- An internal comparator and multiple external open drain comparators outputs ORed together and triggering a break event, when the multiple internal and external break inputs must be merged.

Figure 210. Output redirection

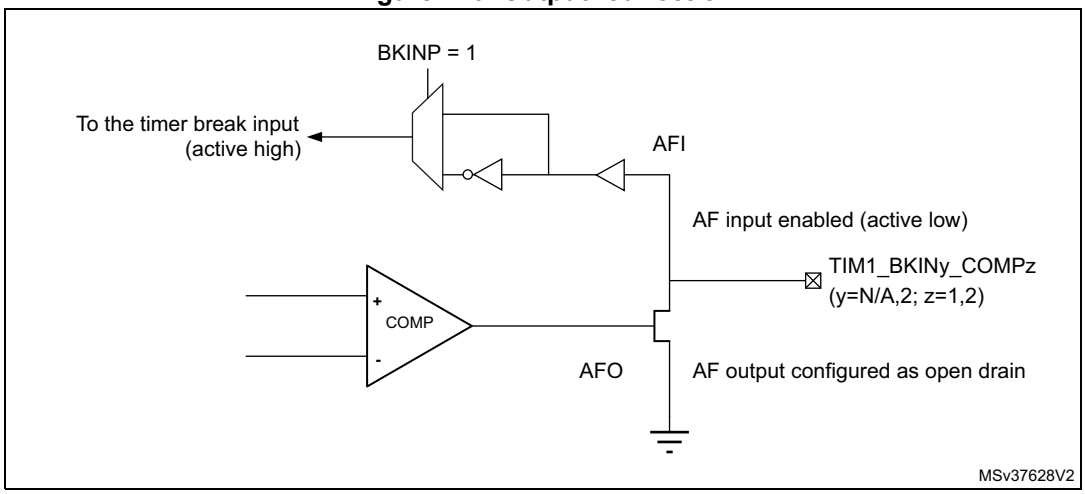

25.3.18 Clearing the OCxREF signal on an external event

The OCxREF signal of a given channel can be cleared when a high level is applied on the ocref_clr_int input (OCxCE enable bit in the corresponding TIMx_CCMRx register set to 1). OCxREF remains low until the next update event (UEV) occurs. This function can only be used in Output compare and PWM modes. It does not work in Forced mode. The OCREF_CLR input is not connected (NC) in this product. The OCCS bit must be set to work in OCxREF clearing mode.

When ETRF is chosen, ETR must be configured as follows:

1. The External Trigger Prescaler should be kept off: bits ETPS[1:0] of the TIMx_SMCR register set to ‘00’.
2. The external clock mode 2 must be disabled: bit ECE of the TIMx_SMCR register set to ‘0’.
3. The External Trigger Polarity (ETP) and the External Trigger Filter (ETF) can be configured according to the user needs.

Figure 211 shows the behavior of the OCxREF signal when the ETRF Input becomes High, for both values of the enable bit OCxCE. In this example, the timer TIMx is programmed in PWM mode.

Figure 211. Clearing TIMx OCxREF

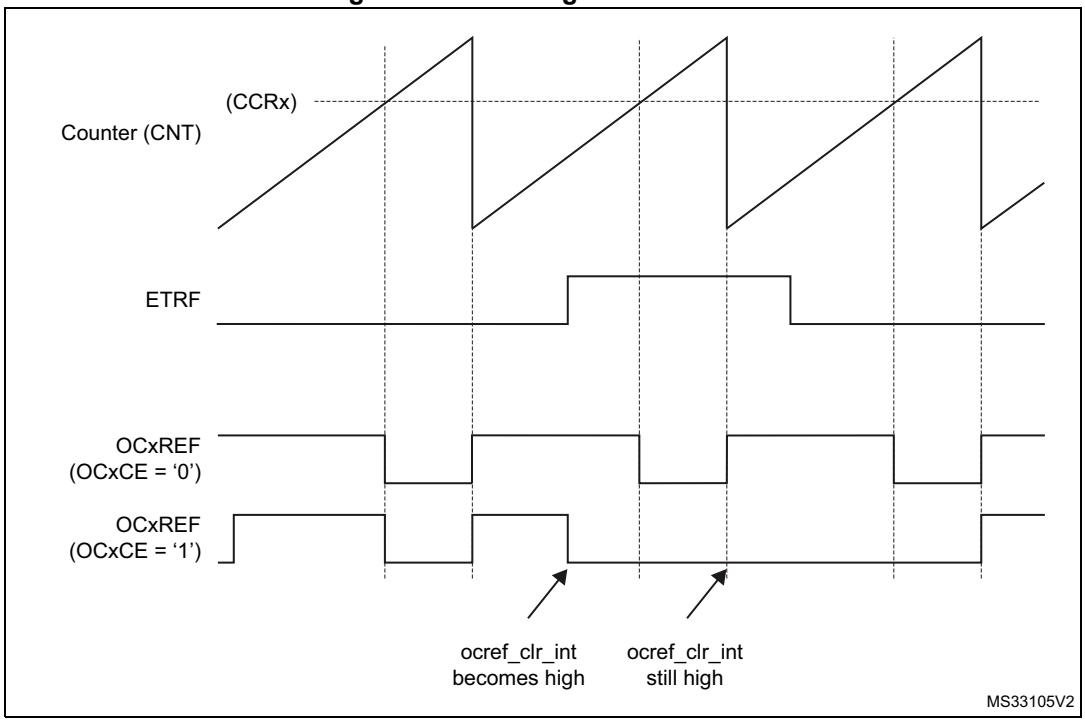

Note: In case of a PWM with a 100% duty cycle (if CCRx>ARR), then OCxREF is enabled again at the next counter overflow.

25.3.19 6-step PWM generation

When complementary outputs are used on a channel, preload bits are available on the OCxM, CCxE and CCxNE bits. The preload bits are transferred to the shadow bits at the COM commutation event. Thus you can program in advance the configuration for the next step and change the configuration of all the channels at the same time. COM can be generated by software by setting the COM bit in the TIMx_EGR register or by hardware (on TRGI rising edge).

A flag is set when the COM event occurs (COMIF bit in the TIMx_SR register), which can generate an interrupt (if the COMIE bit is set in the TIMx_DIER register) or a DMA request (if the COMDE bit is set in the TIMx_DIER register).

The *Figure 212* describes the behavior of the OCx and OCxN outputs when a COM event occurs, in 3 different examples of programmed configurations.

Figure 212. 6-step generation, COM example (OSSR=1)

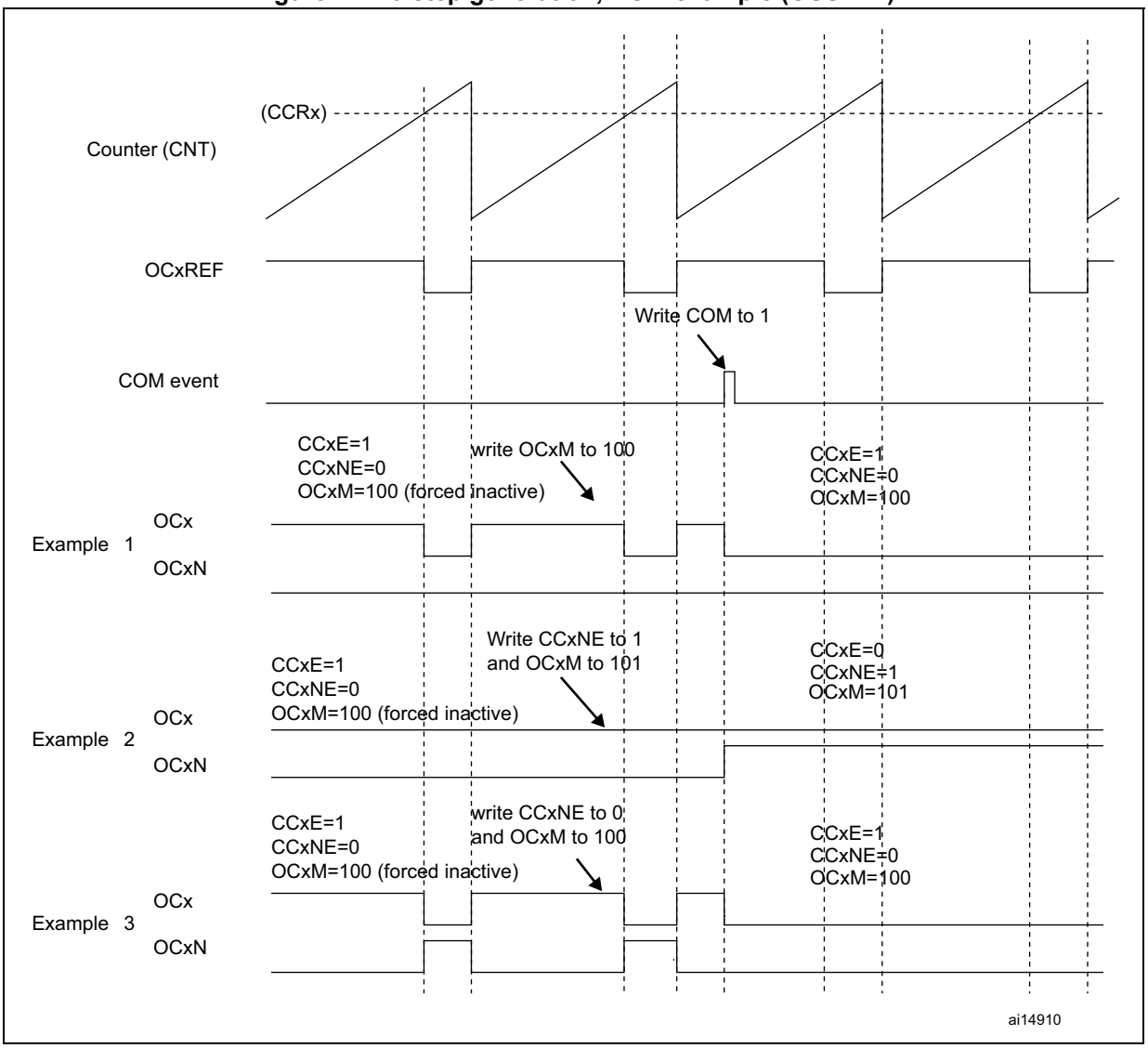

25.3.20 One-pulse mode

One-pulse mode (OPM) is a particular case of the previous modes. It allows the counter to be started in response to a stimulus and to generate a pulse with a programmable length after a programmable delay.

Starting the counter can be controlled through the slave mode controller. Generating the waveform can be done in output compare mode or PWM mode. You select One-pulse mode by setting the OPM bit in the TIMx_CR1 register. This makes the counter stop automatically at the next update event UEV.

A pulse can be correctly generated only if the compare value is different from the counter initial value. Before starting (when the timer is waiting for the trigger), the configuration must be:

- In upcounting: CNT < CCRx ≤ ARR (in particular, 0 < CCRx)
- In downcounting: CNT > CCRx

Figure 213. Example of one pulse mode.

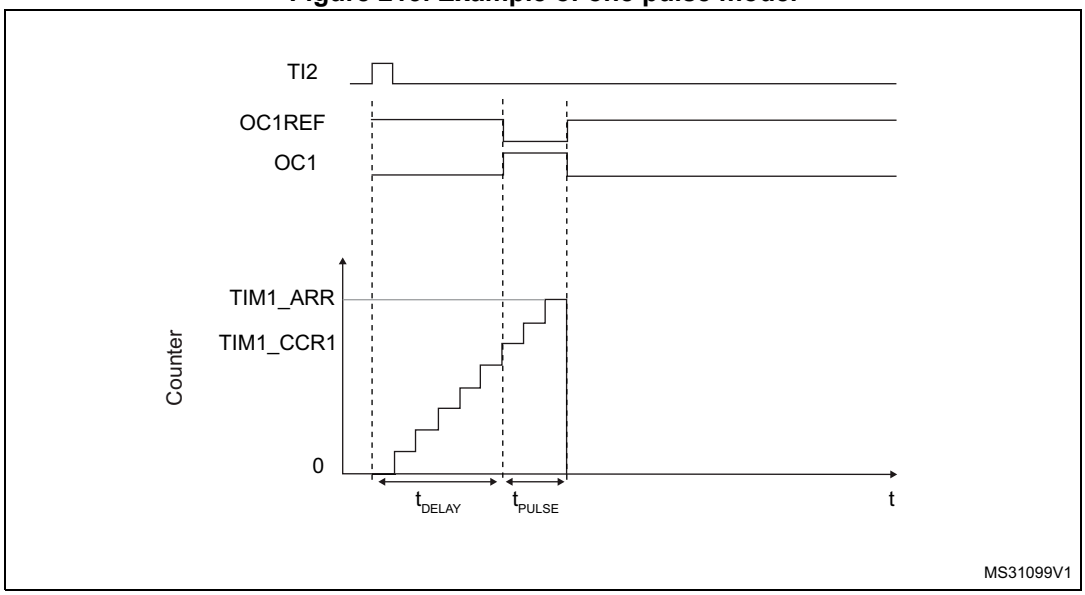

For example you may want to generate a positive pulse on OC1 with a length of t_{PULSE} and after a delay of t_{DELAY} as soon as a positive edge is detected on the TI2 input pin.

Let's use TI2FP2 as trigger 1:

- Map TI2FP2 to TI2 by writing CC2S='01' in the TIMx_CCMR1 register.
- TI2FP2 must detect a rising edge, write CC2P='0' and CC2NP='0' in the TIMx_CCER register.
- Configure TI2FP2 as trigger for the slave mode controller (TRGI) by writing TS=110 in the TIMx_SMCR register.
- TI2FP2 is used to start the counter by writing SMS to '110' in the TIMx_SMCR register (trigger mode).

The OPM waveform is defined by writing the compare registers (taking into account the clock frequency and the counter prescaler).

- The t_{DELAY} is defined by the value written in the TIMx_CCR1 register.
- The t_{PULSE} is defined by the difference between the auto-reload value and the compare value (TIMx_ARR - TIMx_CCR1).
- Let's say you want to build a waveform with a transition from '0' to '1' when a compare match occurs and a transition from '1' to '0' when the counter reaches the auto-reload value. To do this you enable PWM mode 2 by writing OC1M=111 in the TIMx_CCMR1 register. You can optionally enable the preload registers by writing OC1PE='1' in the TIMx_CCMR1 register and ARPE in the TIMx_CR1 register. In this case you have to write the compare value in the TIMx_CCR1 register, the auto-reload value in the TIMx_ARR register, generate an update by setting the UG bit and wait for external trigger event on TI2. CC1P is written to '0' in this example.

In our example, the DIR and CMS bits in the TIMx_CR1 register should be low.

You only want 1 pulse (Single mode), so you write '1 in the OPM bit in the TIMx_CR1 register to stop the counter at the next update event (when the counter rolls over from the auto-reload value back to 0). When OPM bit in the TIMx_CR1 register is set to '0', so the Repetitive Mode is selected.

Particular case: OCx fast enable:

In One-pulse mode, the edge detection on TIx input set the CEN bit which enables the counter. Then the comparison between the counter and the compare value makes the output toggle. But several clock cycles are needed for these operations and it limits the minimum delay t_{DELAY} min we can get.

If you want to output a waveform with the minimum delay, you can set the OCxFE bit in the TIMx_CCMRx register. Then OCxRef (and OCx) are forced in response to the stimulus, without taking in account the comparison. Its new level is the same as if a compare match had occurred. OCxFE acts only if the channel is configured in PWM1 or PWM2 mode.

25.3.21 Retriggerable one pulse mode (OPM)

This mode allows the counter to be started in response to a stimulus and to generate a pulse with a programmable length, but with the following differences with Non-retriggerable one pulse mode described in *Section 25.3.20*:

- The pulse starts as soon as the trigger occurs (no programmable delay)
- The pulse is extended if a new trigger occurs before the previous one is completed

The timer must be in Slave mode, with the bits SMS[3:0] = '1000' (Combined Reset + trigger mode) in the TIMx_SMCR register, and the OCxM[3:0] bits set to '1000' or '1001' for Retrigerrable OPM mode 1 or 2.

If the timer is configured in Up-counting mode, the corresponding CCRx must be set to 0 (the ARR register sets the pulse length). If the timer is configured in Down-counting mode, CCRx must be above or equal to ARR.

Note: The OCxM[3:0] and SMS[3:0] bit fields are split into two parts for compatibility reasons, the most significant bit are not contiguous with the 3 least significant ones.

This mode must not be used with center-aligned PWM modes. It is mandatory to have CMS[1:0] = 00 in TIMx_CR1.

Figure 214. Retriggerable one pulse mode

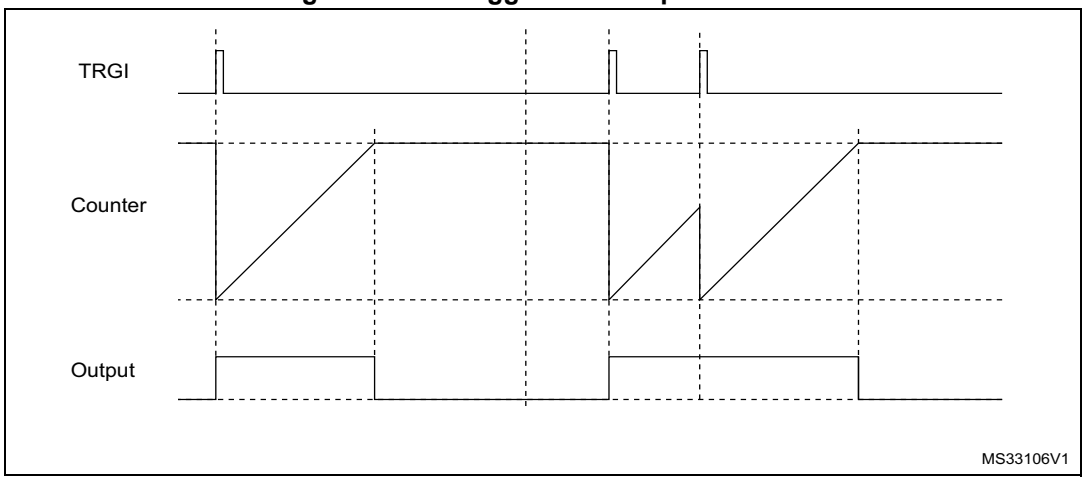

25.3.22 Encoder interface mode

To select Encoder Interface mode write SMS=‘001’ in the TIMx_SMCR register if the counter is counting on TI2 edges only, SMS=’010’ if it is counting on TI1 edges only and SMS=’011’ if it is counting on both TI1 and TI2 edges.

Select the TI1 and TI2 polarity by programming the CC1P and CC2P bits in the TIMx_CCER register. When needed, you can program the input filter as well. CC1NP and CC2NP must be kept low.

The two inputs TI1 and TI2 are used to interface to an quadrature encoder. Refer to *Table 110*. The counter is clocked by each valid transition on TI1FP1 or TI2FP2 (TI1 and TI2 after input filter and polarity selection, TI1FP1=TI1 if not filtered and not inverted, TI2FP2=TI2 if not filtered and not inverted) assuming that it is enabled (CEN bit in TIMx_CR1 register written to ‘1’). The sequence of transitions of the two inputs is evaluated and generates count pulses as well as the direction signal. Depending on the sequence the counter counts up or down, the DIR bit in the TIMx_CR1 register is modified by hardware accordingly. The DIR bit is calculated at each transition on any input (TI1 or TI2), whatever the counter is counting on TI1 only, TI2 only or both TI1 and TI2.

Encoder interface mode acts simply as an external clock with direction selection. This means that the counter just counts continuously between 0 and the auto-reload value in the TIMx_ARR register (0 to ARR or ARR down to 0 depending on the direction). So you must configure TIMx_ARR before starting. in the same way, the capture, compare, prescaler, repetition counter, trigger output features continue to work as normal. Encoder mode and External clock mode 2 are not compatible and must not be selected together.

In this mode, the counter is modified automatically following the speed and the direction of the quadrature encoder and its content, therefore, always represents the encoder’s position. The count direction correspond to the rotation direction of the connected sensor. The table summarizes the possible combinations, assuming TI1 and TI2 don’t switch at the same time.

Table 110. Counting direction versus encoder signals

Active edge	Level on opposite signal (TI1FP1 for TI2, TI2FP2 for TI1)	TI1FP1 signal		TI2FP2 signal	
		Rising	Falling	Rising	Falling
Counting on TI1 only	High	Down	Up	No Count	No Count
	Low	Up	Down	No Count	No Count
Counting on TI2 only	High	No Count	No Count	Up	Down
	Low	No Count	No Count	Down	Up
Counting on TI1 and TI2	High	Down	Up	Up	Down
	Low	Up	Down	Down	Up

A quadrature encoder can be connected directly to the MCU without external interface logic. However, comparators are normally be used to convert the encoder's differential outputs to digital signals. This greatly increases noise immunity. The third encoder output which indicate the mechanical zero position, may be connected to an external interrupt input and trigger a counter reset.

The *Figure 215* gives an example of counter operation, showing count signal generation and direction control. It also shows how input jitter is compensated where both edges are selected. This might occur if the sensor is positioned near to one of the switching points. For this example we assume that the configuration is the following:

- CC1S='01' (TIMx_CCMR1 register, TI1FP1 mapped on TI1).
- CC2S='01' (TIMx_CCMR2 register, TI1FP2 mapped on TI2).
- CC1P='0' and CC1NP='0' (TIMx_CCER register, TI1FP1 non-inverted, TI1FP1=TI1).
- CC2P='0' and CC2NP='0' (TIMx_CCER register, TI1FP2 non-inverted, TI1FP2= TI2).
- SMS='011' (TIMx_SMCR register, both inputs are active on both rising and falling edges).
- CEN='1' (TIMx_CR1 register, Counter enabled).

Figure 215. Example of counter operation in encoder interface mode.

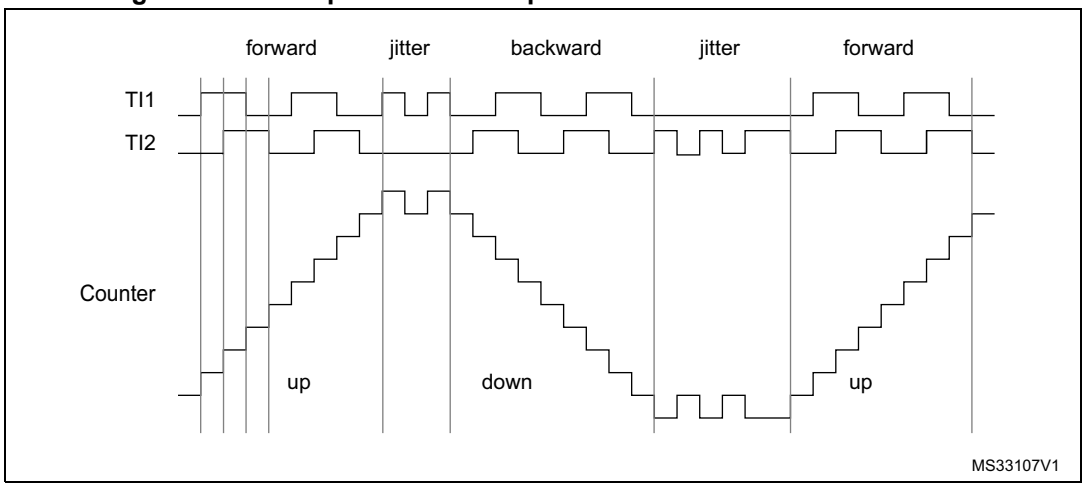

Figure 216 gives an example of counter behavior when TI1FP1 polarity is inverted (same configuration as above except CC1P='1').

Figure 216. Example of encoder interface mode with TI1FP1 polarity inverted.

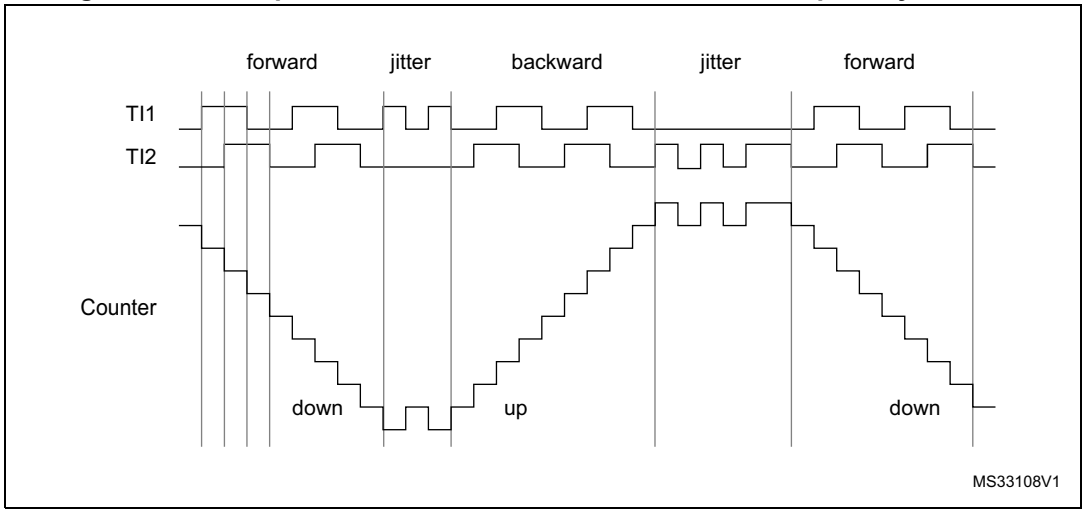

The timer, when configured in Encoder Interface mode provides information on the sensor's current position. You can obtain dynamic information (speed, acceleration, deceleration) by measuring the period between two encoder events using a second timer configured in capture mode. The output of the encoder which indicates the mechanical zero can be used for this purpose. Depending on the time between two events, the counter can also be read at regular times. You can do this by latching the counter value into a third input capture register if available (then the capture signal must be periodic and can be generated by another timer). when available, it is also possible to read its value through a DMA request.

The IUFREMAP bit in the TIMx_CR1 register forces a continuous copy of the update interrupt flag (UIF) into the timer counter register's bit 31 (TIMxCNT[31]). This allows both the counter value and a potential roll-over condition signaled by the UIFCPY flag to be read in an atomic way. It eases the calculation of angular speed by avoiding race conditions caused, for instance, by a processing shared between a background task (counter reading) and an interrupt (update interrupt).

There is no latency between the UIF and UIFCPY flag assertions.

In 32-bit timer implementations, when the IUFREMAP bit is set, bit 31 of the counter is overwritten by the UIFCPY flag upon read access (the counter's most significant bit is only accessible in write mode).

25.3.23 UIF bit remapping

The IUFREMAP bit in the TIMx_CR1 register forces a continuous copy of the Update Interrupt Flag UIF into the timer counter register's bit 31 (TIMxCNT[31]). This allows both the counter value and a potential roll-over condition signaled by the UIFCPY flag to be read in an atomic way. In particular cases, it can ease the calculations by avoiding race conditions, caused for instance by a processing shared between a background task (counter reading) and an interrupt (Update Interrupt).

There is no latency between the UIF and UIFCPY flags assertion.

25.3.24 Timer input XOR function

The TI1S bit in the TIMx_CR2 register, allows the input filter of channel 1 to be connected to the output of an XOR gate, combining the three input pins TIMx_CH1, TIMx_CH2 and TIMx_CH3.

The XOR output can be used with all the timer input functions such as trigger or input capture. It is convenient to measure the interval between edges on two input signals, as per *Figure 217* below.

Figure 217. Measuring time interval between edges on 3 signals

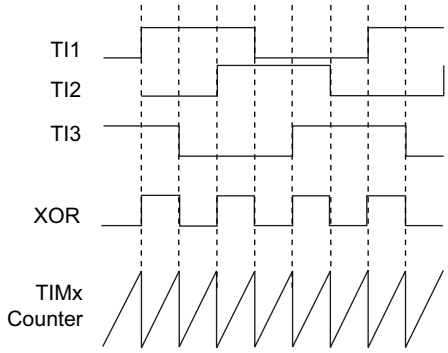

25.3.25 Interfacing with Hall sensors

This is done using the advanced-control timer (TIM1) to generate PWM signals to drive the motor and another timer TIMx (TIM2) referred to as “interfacing timer” in *Figure 218*. The “interfacing timer” captures the 3 timer input pins (CC1, CC2, CC3) connected through a XOR to the TI1 input channel (selected by setting the TI1S bit in the TIMx_CR2 register).

The slave mode controller is configured in reset mode; the slave input is TI1F_ED. Thus, each time one of the 3 inputs toggles, the counter restarts counting from 0. This creates a time base triggered by any change on the Hall inputs.

On the “interfacing timer”, capture/compare channel 1 is configured in capture mode, capture signal is TRC (See *Figure 191: Capture/compare channel (example: channel 1 input stage) on page 641*). The captured value, which corresponds to the time elapsed between 2 changes on the inputs, gives information about motor speed.

The “interfacing timer” can be used in output mode to generate a pulse which changes the configuration of the channels of the advanced-control timer (TIM1) (by triggering a COM event). The TIM1 timer is used to generate PWM signals to drive the motor. To do this, the interfacing timer channel must be programmed so that a positive pulse is generated after a programmed delay (in output compare or PWM mode). This pulse is sent to the advanced-control timer (TIM1) through the TRGO output.

Example: you want to change the PWM configuration of your advanced-control timer TIM1 after a programmed delay each time a change occurs on the Hall inputs connected to one of the TIMx timers.

- Configure 3 timer inputs ORed to the TI1 input channel by writing the TI1S bit in the TIMx_CR2 register to ‘1’,
- Program the time base: write the TIMx_ARR to the max value (the counter must be cleared by the TI1 change. Set the prescaler to get a maximum counter period longer than the time between 2 changes on the sensors,
- Program the channel 1 in capture mode (TRC selected): write the CC1S bits in the TIMx_CCMR1 register to ‘01’. You can also program the digital filter if needed,
- Program the channel 2 in PWM 2 mode with the desired delay: write the OC2M bits to ‘111’ and the CC2S bits to ‘00’ in the TIMx_CCMR1 register,
- Select OC2REF as trigger output on TRGO: write the MMS bits in the TIMx_CR2 register to ‘101’,

In the advanced-control timer TIM1, the right ITR input must be selected as trigger input, the timer is programmed to generate PWM signals, the capture/compare control signals are preloaded (CCPC=1 in the TIMx_CR2 register) and the COM event is controlled by the trigger input (CCUS=1 in the TIMx_CR2 register). The PWM control bits (CCxE, OCxM) are written after a COM event for the next step (this can be done in an interrupt subroutine generated by the rising edge of OC2REF).

The *Figure 218* describes this example.

Figure 218. Example of Hall sensor interface

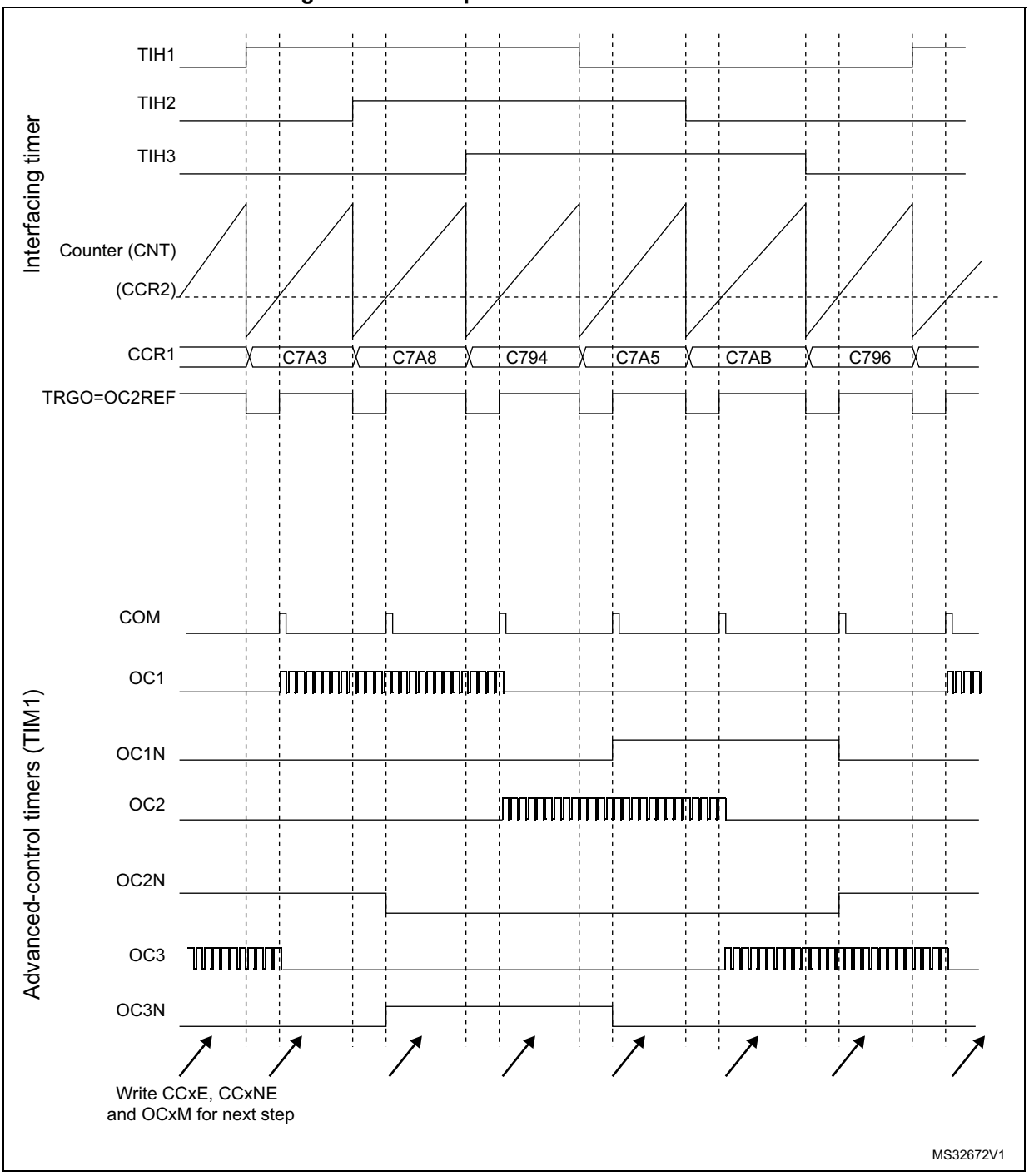

25.3.26 Timer synchronization

The TIMx timers are linked together internally for timer synchronization or chaining. They can be synchronized in several modes: Reset mode, Gated mode, and Trigger mode.

Slave mode: Reset mode

The counter and its prescaler can be reinitialized in response to an event on a trigger input. Moreover, if the URS bit from the TIMx_CR1 register is low, an update event UEV is generated. Then all the preloaded registers (TIMx_ARR, TIMx_CCRx) are updated.

In the following example, the upcounter is cleared in response to a rising edge on TI1 input:

- Configure the channel 1 to detect rising edges on TI1. Configure the input filter duration (in this example, we don't need any filter, so we keep IC1F=0000). The capture prescaler is not used for triggering, so you don't need to configure it. The CC1S bits select the input capture source only, CC1S = 01 in the TIMx_CCMR1 register. Write CC1P=0 and CC1NP='0' in TIMx_CCER register to validate the polarity (and detect rising edges only).
- Configure the timer in reset mode by writing SMS=100 in TIMx_SMCR register. Select TI1 as the input source by writing TS=101 in TIMx_SMCR register.
- Start the counter by writing CEN=1 in the TIMx_CR1 register.

The counter starts counting on the internal clock, then behaves normally until TI1 rising edge. When TI1 rises, the counter is cleared and restarts from 0. In the meantime, the trigger flag is set (TIF bit in the TIMx_SR register) and an interrupt request, or a DMA request can be sent if enabled (depending on the TIE and TDE bits in TIMx_DIER register).

The following figure shows this behavior when the auto-reload register TIMx_ARR=0x36. The delay between the rising edge on TI1 and the actual reset of the counter is due to the resynchronization circuit on TI1 input.

Figure 219. Control circuit in reset mode

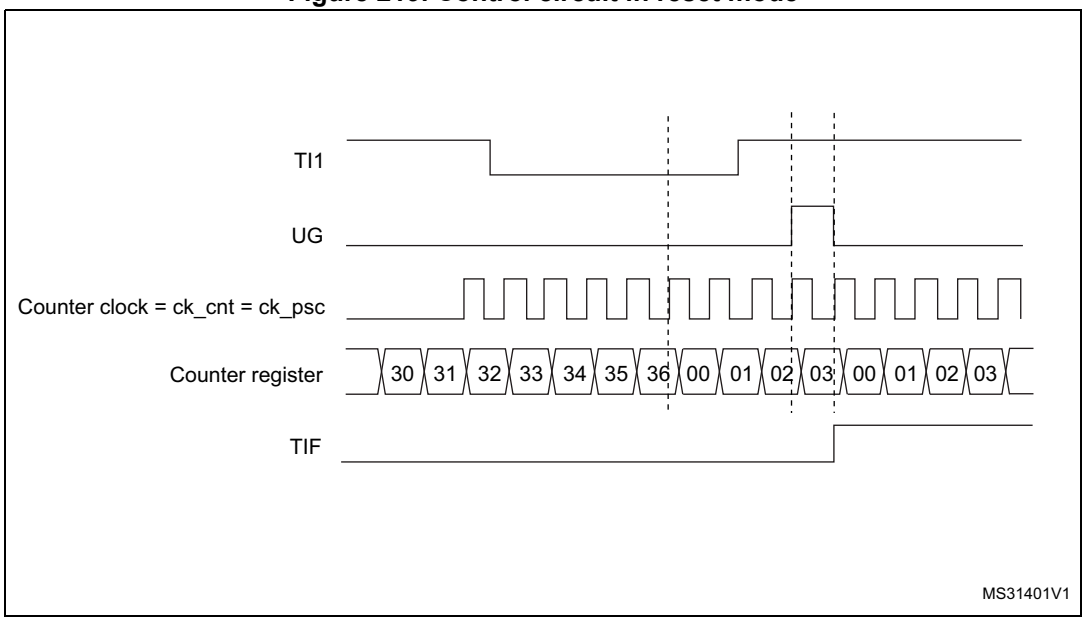

Slave mode: Gated mode

The counter can be enabled depending on the level of a selected input.

In the following example, the upcounter counts only when TI1 input is low:

- Configure the channel 1 to detect low levels on TI1. Configure the input filter duration (in this example, we don't need any filter, so we keep IC1F=0000). The capture prescaler is not used for triggering, so you don't need to configure it. The CC1S bits select the input capture source only, CC1S=01 in TIMx_CCMR1 register. Write CC1P=1 and CC1NP='0' in TIMx_CCER register to validate the polarity (and detect low level only).
- Configure the timer in gated mode by writing SMS=101 in TIMx_SMCR register. Select TI1 as the input source by writing TS=101 in TIMx_SMCR register.
- Enable the counter by writing CEN=1 in the TIMx_CR1 register (in gated mode, the counter doesn't start if CEN=0, whatever is the trigger input level).

The counter starts counting on the internal clock as long as TI1 is low and stops as soon as TI1 becomes high. The TIF flag in the TIMx_SR register is set both when the counter starts or stops.

The delay between the rising edge on TI1 and the actual stop of the counter is due to the resynchronization circuit on TI1 input.

Figure 220. Control circuit in Gated mode

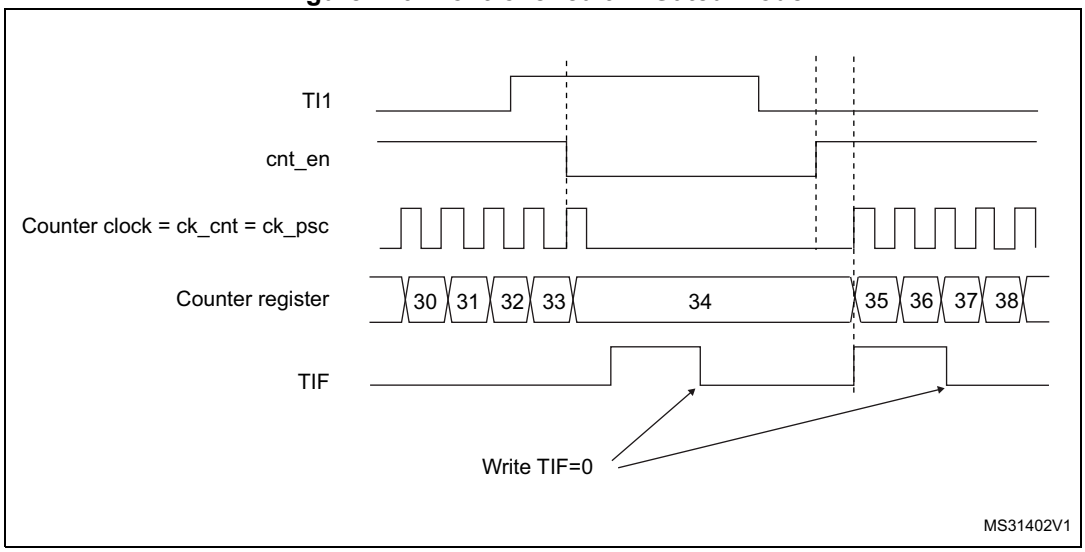

Slave mode: Trigger mode

The counter can start in response to an event on a selected input.

In the following example, the upcounter starts in response to a rising edge on TI2 input:

- Configure the channel 2 to detect rising edges on TI2. Configure the input filter duration (in this example, we don't need any filter, so we keep IC2F=0000). The capture prescaler is not used for triggering, so you don't need to configure it. The CC2S bits are configured to select the input capture source only, CC2S=01 in TIMx_CCMR1 register.

Write CC2P=1 and CC2NP=0 in TIMx_CCER register to validate the polarity (and detect low level only).

- Configure the timer in trigger mode by writing SMS=110 in TIMx_SMCR register. Select TI2 as the input source by writing TS=110 in TIMx_SMCR register.

When a rising edge occurs on TI2, the counter starts counting on the internal clock and the TIF flag is set.

The delay between the rising edge on TI2 and the actual start of the counter is due to the resynchronization circuit on TI2 input.

Figure 221. Control circuit in trigger mode

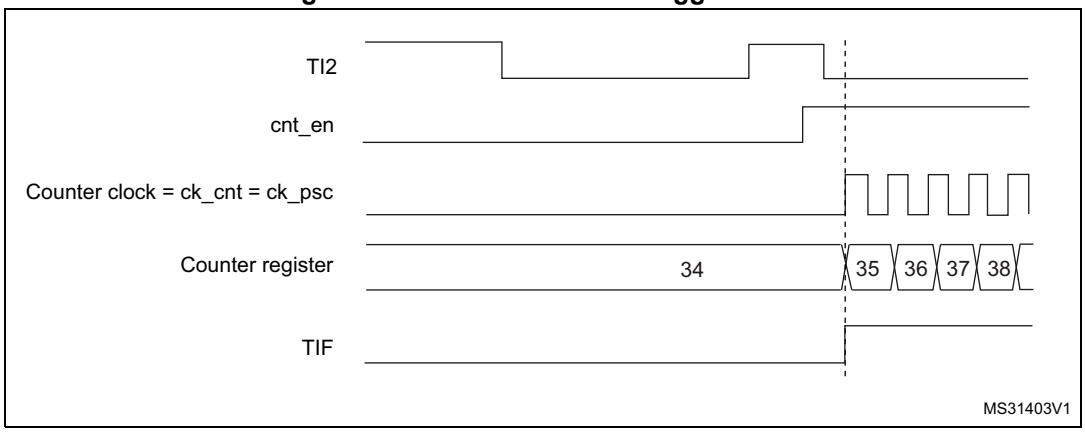

Slave mode: Combined reset + trigger mode

In this case, a rising edge of the selected trigger input (TRGI) reinitializes the counter, generates an update of the registers, and starts the counter.

This mode is used for one-pulse mode.

Slave mode: external clock mode 2 + trigger mode

The external clock mode 2 can be used in addition to another slave mode (except external clock mode 1 and encoder mode). In this case, the ETR signal is used as external clock input, and another input can be selected as trigger input (in reset mode, gated mode or trigger mode). It is recommended not to select ETR as TRGI through the TS bits of TIMx_SMCR register.

In the following example, the upcounter is incremented at each rising edge of the ETR signal as soon as a rising edge of TI1 occurs:

1. Configure the external trigger input circuit by programming the TIMx_SMCR register as follows:
   - ETF = 0000: no filter
   - ETPS=00: prescaler disabled
   - ETP=0: detection of rising edges on ETR and ECE=1 to enable the external clock mode 2.
2. Configure the channel 1 as follows, to detect rising edges on TI:
   - IC1F=0000: no filter.
   - The capture prescaler is not used for triggering and does not need to be configured.
   - CC1S=01in TIMx_CCMR1 register to select only the input capture source
   - CC1P=0 and CC1NP='0' in TIMx_CCER register to validate the polarity (and detect rising edge only).
3. Configure the timer in trigger mode by writing SMS=110 in TIMx_SMCR register. Select TI1 as the input source by writing TS=101 in TIMx_SMCR register.

A rising edge on TI1 enables the counter and sets the TIF flag. The counter then counts on ETR rising edges.

The delay between the rising edge of the ETR signal and the actual reset of the counter is due to the resynchronization circuit on ETRP input.

Figure 222. Control circuit in external clock mode 2 + trigger mode

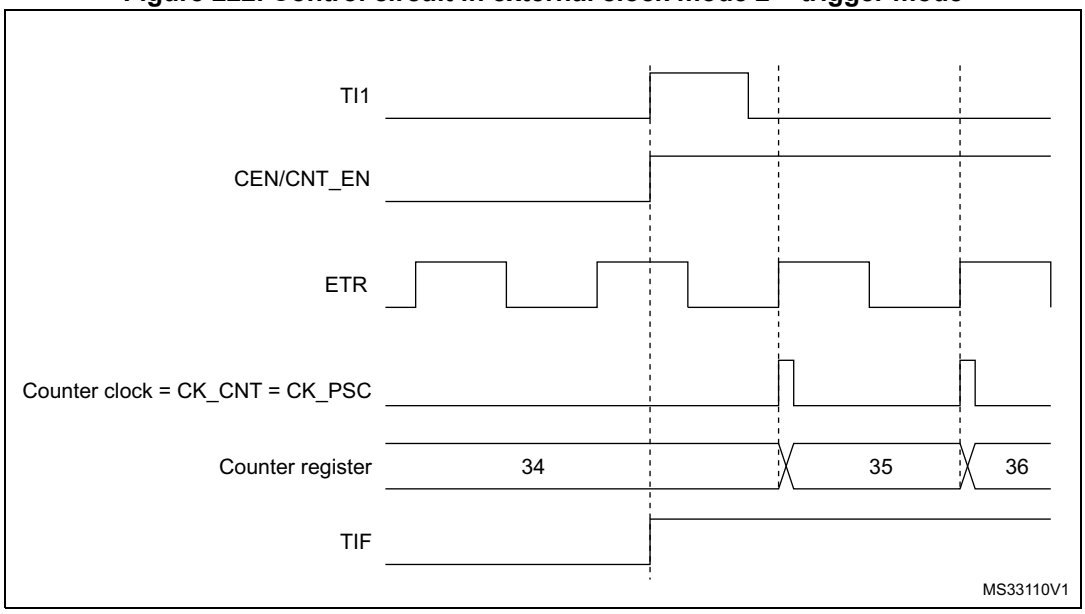

Note: The clock of the slave timer must be enabled prior to receive events from the master timer, and must not be changed on-the-fly while triggers are received from the master timer.

25.3.27 ADC synchronization

The timer can generate an ADC triggering event with various internal signals, such as reset, enable or compare events. It is also possible to generate a pulse issued by internal edge detectors, such as:

- Rising and falling edges of OC4ref
- Rising edge on OC5ref or falling edge on OC6ref

The triggers are issued on the TRGO2 internal line which is redirected to the ADC. There is a total of 16 possible events, which can be selected using the MMS2[3:0] bits in the TIMx_CR2 register.

An example of an application for 3-phase motor drives is given in *Figure 202 on page 653*.

Note: The clock of the slave timer must be enabled prior to receive events from the master timer, and must not be changed on-the-fly while triggers are received from the master timer.

Note: The clock of the ADC must be enabled prior to receive events from the master timer, and must not be changed on-the-fly while triggers are received from the timer.

25.3.28 DMA burst mode

The TIMx timers have the capability to generate multiple DMA requests upon a single event. The main purpose is to be able to re-program part of the timer multiple times without software overhead, but it can also be used to read several registers in a row, at regular intervals.

The DMA controller destination is unique and must point to the virtual register TIMx_DMAR. On a given timer event, the timer launches a sequence of DMA requests (burst). Each write into the TIMx_DMAR register is actually redirected to one of the timer registers.

The DBL[4:0] bits in the TIMx_DCR register set the DMA burst length. The timer recognizes a burst transfer when a read or a write access is done to the TIMx_DMAR address), i.e. the number of transfers (either in half-words or in bytes).

The DBA[4:0] bits in the TIMx_DCR registers define the DMA base address for DMA transfers (when read/write access are done through the TIMx_DMAR address). DBA is defined as an offset starting from the address of the TIMx_CR1 register:

Example:

00000: TIMx_CR1

00001: TIMx_CR2

00010: TIMx_SMCR

As an example, the timer DMA burst feature is used to update the contents of the CCRx registers (x = 2, 3, 4) upon an update event, with the DMA transferring half words into the CCRx registers.

This is done in the following steps:

1. Configure the corresponding DMA channel as follows:
   - DMA channel peripheral address is the DMAR register address
   - DMA channel memory address is the address of the buffer in the RAM containing the data to be transferred by DMA into CCRx registers.
   - Number of data to transfer = 3 (See note below).
   - Circular mode disabled.
2. Configure the DCR register by configuring the DBA and DBL bit fields as follows: DBL = 3 transfers, DBA = 0xE.
3. Enable the TIMx update DMA request (set the UDE bit in the DIER register).
4. Enable TIMx
5. Enable the DMA channel

This example is for the case where every CCRx register to be updated once. If every CCRx register is to be updated twice for example, the number of data to transfer should be 6. Let's take the example of a buffer in the RAM containing data1, data2, data3, data4, data5 and data6. The data is transferred to the CCRx registers as follows: on the first update DMA request, data1 is transferred to CCR2, data2 is transferred to CCR3, data3 is transferred to CCR4 and on the second update DMA request, data4 is transferred to CCR2, data5 is transferred to CCR3 and data6 is transferred to CCR4.

Note: A null value can be written to the reserved registers.

25.3.29 Debug mode

When the microcontroller enters debug mode (Cortex®-M4 core halted), the TIMx counter either continues to work normally or stops, depending on DBG_TIMx_STOP configuration bit in DBG module.

For safety purposes, when the counter is stopped (DBG_TIMx_STOP = 1), the outputs are disabled (as if the MOE bit was reset). The outputs can either be forced to an inactive state (OSSI bit = 1), or have their control taken over by the GPIO controller (OSSI bit = 0), typically to force a Hi-Z.

For more details, refer to *Section 43.16.2: Debug support for timers, RTC, watchdog, bxCAN and I2C*.

For safety purposes, when the counter is stopped (DBG_TIMx_STOP = 1), the outputs are disabled (as if the MOE bit was reset). The outputs can either be forced to an inactive state (OSSI bit = 1), or have their control taken over by the GPIO controller (OSSI bit = 0) to force them to Hi-Z.

25.4 TIM1 registers

Refer to for a list of abbreviations used in register descriptions.

25.4.1 TIM1 control register 1 (TIMx_CR1)

Address offset: 0x00

Reset value: 0x0000

15	14	13	12	11	10	9	8	7	6	5	4	3	2	1	0
Res.	Res.	Res.	Res.	UIFREMAP	Res.	CKD[1:0]		ARPE	CMS[1:0]		DIR	OPM	URS	UDIS	CEN
				rw		rw	rw	rw	rw	rw	rw	rw	rw	rw	rw

Bits 15:12 Reserved, must be kept at reset value.

Bit 11 **UIFREMAP**: UIF status bit remapping

0: No remapping. UIF status bit is not copied to TIMx_CNT register bit 31.
1: Remapping enabled. UIF status bit is copied to TIMx_CNT register bit 31.

Bit 10 Reserved, must be kept at reset value.

Bits 9:8 **CKD[1:0]**: Clock division

This bit-field indicates the division ratio between the timer clock (CK_INT) frequency and the dead-time and sampling clock (t_{DTS})used by the dead-time generators and the digital filters (ETR, TIx),

00: $t_{DTS}=t_{CK_INT}$
01: $t_{DTS}=2*t_{CK_INT}$
10: $t_{DTS}=4*t_{CK_INT}$
11: Reserved, do not program this value

Bit 7 **ARPE**: Auto-reload preload enable

0: TIMx_ARR register is not buffered
1: TIMx_ARR register is buffered

Bits 6:5 **CMS[1:0]**: Center-aligned mode selection

00: Edge-aligned mode. The counter counts up or down depending on the direction bit (DIR).
01: Center-aligned mode 1. The counter counts up and down alternatively. Output compare interrupt flags of channels configured in output (CCxS=00 in TIMx_CCMRx register) are set only when the counter is counting down.
10: Center-aligned mode 2. The counter counts up and down alternatively. Output compare interrupt flags of channels configured in output (CCxS=00 in TIMx_CCMRx register) are set only when the counter is counting up.
11: Center-aligned mode 3. The counter counts up and down alternatively. Output compare interrupt flags of channels configured in output (CCxS=00 in TIMx_CCMRx register) are set both when the counter is counting up or down.

Note: It is not allowed to switch from edge-aligned mode to center-aligned mode as long as the counter is enabled (CEN=1)

Bit 4 **DIR**: Direction

0: Counter used as upcounter
1: Counter used as downcounter

Note: This bit is read only when the timer is configured in Center-aligned mode or Encoder mode.

Bit 3 **OPM**: One pulse mode

0: Counter is not stopped at update event

1: Counter stops counting at the next update event (clearing the bit CEN)

Bit 2 **URS**: Update request source

This bit is set and cleared by software to select the UEV event sources.

0: Any of the following events generate an update interrupt or DMA request if enabled. These events can be:

- Counter overflow/underflow
- Setting the UG bit
- Update generation through the slave mode controller

1: Only counter overflow/underflow generates an update interrupt or DMA request if enabled.

Bit 1 **UDIS**: Update disable

This bit is set and cleared by software to enable/disable UEV event generation.

0: UEV enabled. The Update (UEV) event is generated by one of the following events:

- Counter overflow/underflow
- Setting the UG bit
- Update generation through the slave mode controller

Buffered registers are then loaded with their preload values.

1: UEV disabled. The Update event is not generated, shadow registers keep their value (ARR, PSC, CCRx). However the counter and the prescaler are reinitialized if the UG bit is set or if a hardware reset is received from the slave mode controller.

Bit 0 **CEN**: Counter enable

0: Counter disabled

1: Counter enabled

Note: External clock, gated mode and encoder mode can work only if the CEN bit has been previously set by software. However trigger mode can set the CEN bit automatically by hardware.

25.4.2 TIM1 control register 2 (TIMx_CR2)

Address offset: 0x04

Reset value: 0x0000 0000

31	30	29	28	27	26	25	24	23	22	21	20	19	18	17	16
Res.	Res.	Res.	Res.	Res.	Res.	Res.	Res.	MMS2[3:0]				Res.	OIS6	Res.	OIS5
								rw	rw	rw	rw		rw		rw

15	14	13	12	11	10	9	8	7	6	5	4	3	2	1	0
Res.	OIS4	OIS3N	OIS3	OIS2N	OIS2	OIS1N	OIS1	TI1S	MMS[2:0]			CCDS	CCUS	Res.	CCPC
	rw	rw	rw	rw	rw	rw	rw	rw	rw	rw	rw	rw	rw		rw

Bits 31:24 Reserved, must be kept at reset value.

Bits 23:20 **MMS2[3:0]**: Master mode selection 2

These bits allow the information to be sent to ADC for synchronization (TRGO2) to be selected. The combination is as follows:

0000: **Reset** - the UG bit from the TIMx_EGR register is used as trigger output (TRGO2). If the reset is generated by the trigger input (slave mode controller configured in reset mode), the signal on TRGO2 is delayed compared to the actual reset.

0001: **Enable** - the Counter Enable signal CNT_EN is used as trigger output (TRGO2). It is useful to start several timers at the same time or to control a window in which a slave timer is enabled. The Counter Enable signal is generated by a logic OR between the CEN control bit and the trigger input when configured in Gated mode. When the Counter Enable signal is controlled by the trigger input, there is a delay on TRGO2, except if the Master/Slave mode is selected (see the MSM bit description in TIMx_SMCR register).

0010: **Update** - the update event is selected as trigger output (TRGO2). For instance, a master timer can then be used as a prescaler for a slave timer.

0011: **Compare pulse** - the trigger output sends a positive pulse when the CC1IF flag is to be set (even if it was already high), as soon as a capture or compare match occurs (TRGO2).

0100: **Compare** - OC1REF signal is used as trigger output (TRGO2)

0101: **Compare** - OC2REF signal is used as trigger output (TRGO2)

0110: **Compare** - OC3REF signal is used as trigger output (TRGO2)

0111: **Compare** - OC4REF signal is used as trigger output (TRGO2)

1000: **Compare** - OC5REF signal is used as trigger output (TRGO2)

1001: **Compare** - OC6REF signal is used as trigger output (TRGO2)

1010: **Compare Pulse** - OC4REF rising or falling edges generate pulses on TRGO2

1011: **Compare Pulse** - OC6REF rising or falling edges generate pulses on TRGO2

1100: **Compare Pulse** - OC4REF or OC6REF rising edges generate pulses on TRGO2

1101: **Compare Pulse** - OC4REF rising or OC6REF falling edges generate pulses on TRGO2

1110: **Compare Pulse** - OC5REF or OC6REF rising edges generate pulses on TRGO2

1111: **Compare Pulse** - OC5REF rising or OC6REF falling edges generate pulses on TRGO2

Note: The clock of the slave timer or ADC must be enabled prior to receive events from the master timer, and must not be changed on-the-fly while triggers are received from the master timer.

Bit 19 Reserved, must be kept at reset value.

Bit 18 **OIS6**: Output Idle state 6 (OC6 output)

Refer to OIS1 bit

Bit 17 Reserved, must be kept at reset value.

Bit 16 **OIS5**: Output Idle state 5 (OC5 output)

Refer to OIS1 bit

Bit 15 Reserved, must be kept at reset value.

Bit 14 **OIS4**: Output Idle state 4 (OC4 output)

Refer to OIS1 bit

Bit 13 **OIS3N**: Output Idle state 3 (OC3N output)

Refer to OIS1N bit

Bit 12 **OIS3**: Output Idle state 3 (OC3 output)

Refer to OIS1 bit

Bit 11 **OIS2N**: Output Idle state 2 (OC2N output)
Refer to OIS1N bit

Bit 10 **OIS2**: Output Idle state 2 (OC2 output)
Refer to OIS1 bit

Bit 9 **OIS1N**: Output Idle state 1 (OC1N output)
0: OC1N=0 after a dead-time when MOE=0
1: OC1N=1 after a dead-time when MOE=0

Note: This bit can not be modified as long as LOCK level 1, 2 or 3 has been programmed (LOCK bits in TIMx_BDTR register).

Bit 8 **OIS1**: Output Idle state 1 (OC1 output)
0: OC1=0 (after a dead-time if OC1N is implemented) when MOE=0
1: OC1=1 (after a dead-time if OC1N is implemented) when MOE=0

Note: This bit can not be modified as long as LOCK level 1, 2 or 3 has been programmed (LOCK bits in TIMx_BDTR register).

Bit 7 **TI1S**: TI1 selection
0: The TIMx_CH1 pin is connected to TI1 input
1: The TIMx_CH1, CH2 and CH3 pins are connected to the TI1 input (XOR combination)

Bits 6:4 **MMS[1:0]**: Master mode selection
These bits allow to select the information to be sent in master mode to slave timers for synchronization (TRGO). The combination is as follows:
000: **Reset** - the UG bit from the TIMx_EGR register is used as trigger output (TRGO). If the reset is generated by the trigger input (slave mode controller configured in reset mode) then the signal on TRGO is delayed compared to the actual reset.
001: **Enable** - the Counter Enable signal CNT_EN is used as trigger output (TRGO). It is useful to start several timers at the same time or to control a window in which a slave timer is enable. The Counter Enable signal is generated by a logic OR between CEN control bit and the trigger input when configured in gated mode. When the Counter Enable signal is controlled by the trigger input, there is a delay on TRGO, except if the master/slave mode is selected (see the MSM bit description in TIMx_SMCR register).
010: **Update** - The update event is selected as trigger output (TRGO). For instance a master timer can then be used as a prescaler for a slave timer.
011: **Compare Pulse** - The trigger output send a positive pulse when the CC1IF flag is to be set (even if it was already high), as soon as a capture or a compare match occurred. (TRGO).
100: **Compare** - OC1REF signal is used as trigger output (TRGO)
101: **Compare** - OC2REF signal is used as trigger output (TRGO)
110: **Compare** - OC3REF signal is used as trigger output (TRGO)
111: **Compare** - OC4REF signal is used as trigger output (TRGO)

Note: The clock of the slave timer or ADC must be enabled prior to receive events from the master timer, and must not be changed on-the-fly while triggers are received from the master timer.

Bit 3 **CCDS**: Capture/compare DMA selection
0: CCx DMA request sent when CCx event occurs
1: CCx DMA requests sent when update event occurs

Bit 2 **CCUS**: Capture/compare control update selection

0: When capture/compare control bits are preloaded (CCPC=1), they are updated by setting the COMG bit only

1: When capture/compare control bits are preloaded (CCPC=1), they are updated by setting the COMG bit or when an rising edge occurs on TRGI

Note: This bit acts only on channels that have a complementary output.

Bit 1 Reserved, must be kept at reset value.

Bit 0 **CCPC**: Capture/compare preloaded control

0: CCxE, CCxNE and OCxM bits are not preloaded

1: CCxE, CCxNE and OCxM bits are preloaded, after having been written, they are updated only when a commutation event (COM) occurs (COMG bit set or rising edge detected on TRGI, depending on the CCUS bit).

Note: This bit acts only on channels that have a complementary output.

25.4.3 TIM1 slave mode control register (TIMx_SMCR)

Address offset: 0x08

Reset value: 0x0000 0000

31	30	29	28	27	26	25	24	23	22	21	20	19	18	17	16
Res.	Res.	Res.	Res.	Res.	Res.	Res.	Res.	Res.	Res.	Res.	Res.	Res.	Res.	Res.	SMS[3]
															rw
15	14	13	12	11	10	9	8	7	6	5	4	3	2	1	0
ETP	ECE	ETPS[1:0]		ETF[3:0]				MSM	TS[2:0]			OCCS	SMS[2:0]		
rw	rw	rw	rw	rw	rw	rw	rw	rw	rw	rw	rw	rw	rw	rw	rw

Bits 31:17 Reserved, must be kept at reset value.

Bit 16 **SMS[3]**: Slave mode selection - bit 3

Refer to SMS description - bits 2:0

Bit 15 **ETP**: External trigger polarity

This bit selects whether ETR or $\overline{ETR}$ is used for trigger operations

0: ETR is non-inverted, active at high level or rising edge.

1: ETR is inverted, active at low level or falling edge.

Bit 14 **ECE**: External clock enable

This bit enables External clock mode 2.

0: External clock mode 2 disabled

1: External clock mode 2 enabled. The counter is clocked by any active edge on the ETRF signal.

*Note: **1:** Setting the ECE bit has the same effect as selecting external clock mode 1 with TRGI connected to ETRF (SMS=111 and TS=111).*

__2:__ It is possible to simultaneously use external clock mode 2 with the following slave modes: reset mode, gated mode and trigger mode. Nevertheless, TRGI must not be connected to ETRF in this case (TS bits must not be 111).

__3:__ If external clock mode 1 and external clock mode 2 are enabled at the same time, the external clock input is ETRF.

Bits 13:12 **ETPS[1:0]**: External trigger prescaler

External trigger signal ETRP frequency must be at most 1/4 of TIMxCLK frequency. A prescaler can be enabled to reduce ETRP frequency. It is useful when inputting fast external clocks.

00: Prescaler OFF
01: ETRP frequency divided by 2
10: ETRP frequency divided by 4
11: ETRP frequency divided by 8

Bits 11:8 **ETF[3:0]**: External trigger filter

This bit-field then defines the frequency used to sample ETRP signal and the length of the digital filter applied to ETRP. The digital filter is made of an event counter in which N consecutive events are needed to validate a transition on the output:

0000: No filter, sampling is done at f_{DTS}
0001: $f_{SAMPLING}=f_{CK_INT}$, N=2
0010: $f_{SAMPLING}=f_{CK_INT}$, N=4
0011: $f_{SAMPLING}=f_{CK_INT}$, N=8
0100: $f_{SAMPLING}=f_{DTS}/2$, N=6
0101: $f_{SAMPLING}=f_{DTS}/2$, N=8
0110: $f_{SAMPLING}=f_{DTS}/4$, N=6
0111: $f_{SAMPLING}=f_{DTS}/4$, N=8
1000: $f_{SAMPLING}=f_{DTS}/8$, N=6
1001: $f_{SAMPLING}=f_{DTS}/8$, N=8
1010: $f_{SAMPLING}=f_{DTS}/16$, N=5
1011: $f_{SAMPLING}=f_{DTS}/16$, N=6
1100: $f_{SAMPLING}=f_{DTS}/16$, N=8
1101: $f_{SAMPLING}=f_{DTS}/32$, N=5
1110: $f_{SAMPLING}=f_{DTS}/32$, N=6
1111: $f_{SAMPLING}=f_{DTS}/32$, N=8

Bit 7 **MSM:** Master/slave mode

0: No action
1: The effect of an event on the trigger input (TRGI) is delayed to allow a perfect synchronization between the current timer and its slaves (through TRGO). It is useful if we want to synchronize several timers on a single external event.

Bits 6:4 **TS[2:0]:** Trigger selection

This bit-field selects the trigger input to be used to synchronize the counter.

000: Internal Trigger 0 (ITR0)
001: Internal Trigger 1 (ITR1)
010: Reserved
011: Reserved
100: TI1 Edge Detector (TI1F_ED)
101: Filtered Timer Input 1 (TI1FP1)
110: Filtered Timer Input 2 (TI2FP2)
111: External Trigger input (ETRF)

See *Table 111: TIM1 internal trigger connection on page 684* for more details on ITRx meaning for each Timer.

Note: These bits must be changed only when they are not used (e.g. when SMS=000) to avoid wrong edge detections at the transition.

Bit 3 **OCCS:** OCREF clear selection

This bit is used to select the OCREF clear source.

0: OCREF_CLR_INT is not connected (reserved configuration)
1: OCREF_CLR_INT is connected to ETRF

Bits 2:0 **SMS:** Slave mode selection

When external signals are selected the active edge of the trigger signal (TRGI) is linked to the polarity selected on the external input (see Input Control register and Control Register description.

0000: Slave mode disabled - if CEN = '1' then the prescaler is clocked directly by the internal clock.

0001: Encoder mode 1 - Counter counts up/down on TI1FP1 edge depending on TI2FP2 level.

0010: Encoder mode 2 - Counter counts up/down on TI2FP2 edge depending on TI1FP1 level.

0011: Encoder mode 3 - Counter counts up/down on both TI1FP1 and TI2FP2 edges depending on the level of the other input.

0100: Reset Mode - Rising edge of the selected trigger input (TRGI) reinitializes the counter and generates an update of the registers.

0101: Gated Mode - The counter clock is enabled when the trigger input (TRGI) is high. The counter stops (but is not reset) as soon as the trigger becomes low. Both start and stop of the counter are controlled.

0110: Trigger Mode - The counter starts at a rising edge of the trigger TRGI (but it is not reset). Only the start of the counter is controlled.

0111: External Clock Mode 1 - Rising edges of the selected trigger (TRGI) clock the counter.

1000: Combined reset + trigger mode - Rising edge of the selected trigger input (TRGI) reinitializes the counter, generates an update of the registers and starts the counter.

Codes above 1000: Reserved.

Note: The gated mode must not be used if TI1F_ED is selected as the trigger input (TS=100). Indeed, TI1F_ED outputs 1 pulse for each transition on TI1F, whereas the gated mode checks the level of the trigger signal.

Note: The clock of the slave timer must be enabled prior to receive events from the master timer, and must not be changed on-the-fly while triggers are received from the master timer.

Table 111. TIM1 internal trigger connection

Slave TIM	ITR0 (TS = 000)	ITR1 (TS = 001)	ITR2 (TS = 010)	ITR3 (TS = 011)
TIM1	TIM15	TIM2	Not connected	Not connected

25.4.4 TIM1 DMA/interrupt enable register (TIMx_DIER)

Address offset: 0x0C

Reset value: 0x0000

15	14	13	12	11	10	9	8	7	6	5	4	3	2	1	0
Res.	TDE	COMDE	CC4DE	CC3DE	CC2DE	CC1DE	UDE	BIE	TIE	COMIE	CC4IE	CC3IE	CC2IE	CC1IE	UIE
	rw	rw	rw	rw	rw	rw	rw	rw	rw	rw	rw	rw	rw	rw	rw

Bit 15 Reserved, must be kept at reset value.

Bit 14 **TDE**: Trigger DMA request enable

0: Trigger DMA request disabled

1: Trigger DMA request enabled

Bit 13 **COMDE**: COM DMA request enable

0: COM DMA request disabled

1: COM DMA request enabled

Bit 12 **CC4DE**: Capture/Compare 4 DMA request enable
0: CC4 DMA request disabled
1: CC4 DMA request enabled

Bit 11 **CC3DE**: Capture/Compare 3 DMA request enable
0: CC3 DMA request disabled
1: CC3 DMA request enabled

Bit 10 **CC2DE**: Capture/Compare 2 DMA request enable
0: CC2 DMA request disabled
1: CC2 DMA request enabled

Bit 9 **CC1DE**: Capture/Compare 1 DMA request enable
0: CC1 DMA request disabled
1: CC1 DMA request enabled

Bit 8 **UDE**: Update DMA request enable
0: Update DMA request disabled
1: Update DMA request enabled

Bit 7 **BIE**: Break interrupt enable
0: Break interrupt disabled
1: Break interrupt enabled

Bit 6 **TIE**: Trigger interrupt enable
0: Trigger interrupt disabled
1: Trigger interrupt enabled

Bit 5 **COMIE**: COM interrupt enable
0: COM interrupt disabled
1: COM interrupt enabled

Bit 4 **CC4IE**: Capture/Compare 4 interrupt enable
0: CC4 interrupt disabled
1: CC4 interrupt enabled

Bit 3 **CC3IE**: Capture/Compare 3 interrupt enable
0: CC3 interrupt disabled
1: CC3 interrupt enabled

Bit 2 **CC2IE**: Capture/Compare 2 interrupt enable
0: CC2 interrupt disabled
1: CC2 interrupt enabled

Bit 1 **CC1IE**: Capture/Compare 1 interrupt enable
0: CC1 interrupt disabled
1: CC1 interrupt enabled

Bit 0 **UIE**: Update interrupt enable
0: Update interrupt disabled
1: Update interrupt enabled

25.4.5 TIM1 status register (TIMx_SR)

Address offset: 0x10

Reset value: 0x0000 0000

31	30	29	28	27	26	25	24	23	22	21	20	19	18	17	16
Res.	Res.	Res.	Res.	Res.	Res.	Res.	Res.	Res.	Res.	Res.	Res.	Res.	Res.	CC6IF	CC5IF
														rc_w0	rc_w0

15	14	13	12	11	10	9	8	7	6	5	4	3	2	1	0
Res.	Res.	SBIF	CC4OF	CC3OF	CC2OF	CC1OF	B2IF	BIF	TIF	COMIF	CC4IF	CC3IF	CC2IF	CC1IF	UIF
		rc_w0	rc_w0	rc_w0	rc_w0	rc_w0	rc_w0	rc_w0	rc_w0	rc_w0	rc_w0	rc_w0	rc_w0	rc_w0	rc_w0

Bits 31:18 Reserved, must be kept at reset value.

Bit 17 **CC6IF**: Compare 6 interrupt flag
Refer to CC1IF description (Note: Channel 6 can only be configured as output)

Bit 16 **CC5IF**: Compare 5 interrupt flag
Refer to CC1IF description (Note: Channel 5 can only be configured as output)

Bits 15:14 Reserved, must be kept at reset value.

Bit 13 **SBIF**: System Break interrupt flag
This flag is set by hardware as soon as the system break input goes active. It can be cleared by software if the system break input is not active.
This flag must be reset to re-start PWM operation.
0: No break event occurred.
1: An active level has been detected on the system break input. An interrupt is generated if BIE=1 in the TIMx_DIER register.

Bit 12 **CC4OF**: Capture/Compare 4 overcapture flag
Refer to CC1OF description

Bit 11 **CC3OF**: Capture/Compare 3 overcapture flag
Refer to CC1OF description

Bit 10 **CC2OF**: Capture/Compare 2 overcapture flag
Refer to CC1OF description

Bit 9 **CC1OF**: Capture/Compare 1 overcapture flag
This flag is set by hardware only when the corresponding channel is configured in input capture mode. It is cleared by software by writing it to ‘0’.
0: No overcapture has been detected.
1: The counter value has been captured in TIMx_CCR1 register while CC1IF flag was already set

Bit 8 **B2IF**: Break 2 interrupt flag
This flag is set by hardware as soon as the break 2 input goes active. It can be cleared by software if the break 2 input is not active.
0: No break event occurred.
1: An active level has been detected on the break 2 input. An interrupt is generated if BIE=1 in the TIMx_DIER register.

Bit 7 **BIF**: Break interrupt flag

This flag is set by hardware as soon as the break input goes active. It can be cleared by software if the break input is not active.

0: No break event occurred.

1: An active level has been detected on the break input. An interrupt is generated if BIE=1 in the TIMx_DIER register.

Bit 6 **TIF**: Trigger interrupt flag

This flag is set by hardware on trigger event (active edge detected on TRGI input when the slave mode controller is enabled in all modes but gated mode. It is set when the counter starts or stops when gated mode is selected. It is cleared by software.

0: No trigger event occurred.

1: Trigger interrupt pending.

Bit 5 **COMIF**: COM interrupt flag

This flag is set by hardware on COM event (when Capture/compare Control bits - CCxE, CCxNE, OCxM - have been updated). It is cleared by software.

0: No COM event occurred.

1: COM interrupt pending.

Bit 4 **CC4IF**: Capture/Compare 4 interrupt flag

Refer to CC1IF description

Bit 3 **CC3IF**: Capture/Compare 3 interrupt flag

Refer to CC1IF description

Bit 2 **CC2IF**: Capture/Compare 2 interrupt flag

Refer to CC1IF description

Bit 1 **CC1IF**: Capture/Compare 1 interrupt flag

If channel CC1 is configured as output: This flag is set by hardware when the counter matches the compare value, with some exception in center-aligned mode (refer to the CMS bits in the TIMx_CR1 register description). It is cleared by software.

0: No match.

1: The content of the counter TIMx_CNT matches the content of the TIMx_CCR1 register. When the contents of TIMx_CCR1 are greater than the contents of TIMx_ARR, the CC1IF bit goes high on the counter overflow (in upcounting and up/down-counting modes) or underflow (in downcounting mode)

If channel CC1 is configured as input: This bit is set by hardware on a capture. It is cleared by software or by reading the TIMx_CCR1 register.

0: No input capture occurred

1: The counter value has been captured in TIMx_CCR1 register (An edge has been detected on IC1 which matches the selected polarity)

Bit 0 **UIF**: Update interrupt flag

This bit is set by hardware on an update event. It is cleared by software.

0: No update occurred.

1: Update interrupt pending. This bit is set by hardware when the registers are updated:

– At overflow or underflow regarding the repetition counter value (update if repetition counter = 0) and if the UDIS=0 in the TIMx_CR1 register.

– When CNT is reinitialized by software using the UG bit in TIMx_EGR register, if URS=0 and UDIS=0 in the TIMx_CR1 register.

– When CNT is reinitialized by a trigger event (refer to *Section 25.4.3: TIM1 slave mode control register (TIMx_SMCR)*), if URS=0 and UDIS=0 in the TIMx_CR1 register.

25.4.6 TIM1 event generation register (TIMx_EGR)

Address offset: 0x14

Reset value: 0x0000

15	14	13	12	11	10	9	8	7	6	5	4	3	2	1	0
Res.	Res.	Res.	Res.	Res.	Res.	Res.	B2G	BG	TG	COMG	CC4G	CC3G	CC2G	CC1G	UG
							w	w	w	w	w	w	w	w	w

Bits 15:9 Reserved, must be kept at reset value.

Bit 8 **B2G**: Break 2 generation

This bit is set by software in order to generate an event, it is automatically cleared by hardware.

0: No action

1: A break 2 event is generated. MOE bit is cleared and B2IF flag is set. Related interrupt can occur if enabled.

Bit 7 **BG**: Break generation

This bit is set by software in order to generate an event, it is automatically cleared by hardware.

0: No action

1: A break event is generated. MOE bit is cleared and BIF flag is set. Related interrupt or DMA transfer can occur if enabled.

Bit 6 **TG**: Trigger generation

This bit is set by software in order to generate an event, it is automatically cleared by hardware.

0: No action

1: The TIF flag is set in TIMx_SR register. Related interrupt or DMA transfer can occur if enabled.

Bit 5 **COMG**: Capture/Compare control update generation

This bit can be set by software, it is automatically cleared by hardware

0: No action

1: When CCPC bit is set, it allows to update CCxE, CCxNE and OCxM bits

Note: This bit acts only on channels having a complementary output.

Bit 4 **CC4G**: Capture/Compare 4 generation

Refer to CC1G description

Bit 3 **CC3G**: Capture/Compare 3 generation

Refer to CC1G description

Bit 2 **CC2G**: Capture/Compare 2 generation

Refer to CC1G description

Bit 1 **CC1G**: Capture/Compare 1 generation

This bit is set by software in order to generate an event, it is automatically cleared by hardware.

0: No action

1: A capture/compare event is generated on channel 1:

If channel CC1 is configured as output:

CC1IF flag is set, Corresponding interrupt or DMA request is sent if enabled.

If channel CC1 is configured as input:

The current value of the counter is captured in TIMx_CCR1 register. The CC1IF flag is set, the corresponding interrupt or DMA request is sent if enabled. The CC1OF flag is set if the CC1IF flag was already high.

Bit 0 **UG**: Update generation

This bit can be set by software, it is automatically cleared by hardware.

0: No action

1: Reinitialize the counter and generates an update of the registers. Note that the prescaler counter is cleared too (anyway the prescaler ratio is not affected). The counter is cleared if the center-aligned mode is selected or if DIR=0 (upcounting), else it takes the auto-reload value (TIMx_ARR) if DIR=1 (downcounting).

25.4.7 TIM1 capture/compare mode register 1 (TIMx_CCMR1)

Address offset: 0x18

Reset value: 0x0000 0000

The channels can be used in input (capture mode) or in output (compare mode). The direction of a channel is defined by configuring the corresponding CCxS bits. All the other bits of this register have a different function in input and in output mode. For a given bit, OCxx describes its function when the channel is configured in output, ICxx describes its function when the channel is configured in input. So you must take care that the same bit can have a different meaning for the input stage and for the output stage.

31	30	29	28	27	26	25	24	23	22	21	20	19	18	17	16
Res.	Res.	Res.	Res.	Res.	Res.	Res.	OC2M[3]	Res.	Res.	Res.	Res.	Res.	Res.	Res.	OC1M[3]
Res.	Res.	Res.	Res.	Res.	Res.	Res.	Res.	Res.	Res.	Res.	Res.	Res.	Res.	Res.	Res.
							rw								rw

15	14	13	12	11	10	9	8	7	6	5	4	3	2	1	0
OC2 CE	OC2M[2:0]			OC2 PE	OC2 FE	CC2S[1:0]		OC1 CE	OC1M[2:0]			OC1 PE	OC1 FE	CC1S[1:0]	
IC2F[3:0]				IC2PSC[1:0]				IC1F[3:0]				IC1PSC[1:0]			
rw	rw	rw	rw	rw	rw	rw	rw	rw	rw	rw	rw	rw	rw	rw	rw

Output compare mode:

Bits 31:25 Reserved, must be kept at reset value.

Bit 24 **OC2M[3]**: Output Compare 2 mode - bit 3

Refer to OC2M description on bits 14:12.

Bits 23:17 Reserved, must be kept at reset value.

Bits16 **OC1M[3]**: Output Compare 1 mode - bit 3

Refer to OC1M description on bits 6:4

Bit 15 **OC2CE:** Output Compare 2 clear enable

Bits 14:12 **OC2M[2:0]**: Output Compare 2 mode

Bit 11 **OC2PE**: Output Compare 2 preload enable

Bit 10 **OC2FE**: Output Compare 2 fast enable

Bits 9:8 **CC2S[1:0]**: Capture/Compare 2 selection

This bit-field defines the direction of the channel (input/output) as well as the used input.

00: CC2 channel is configured as output

01: CC2 channel is configured as input, IC2 is mapped on TI2

10: CC2 channel is configured as input, IC2 is mapped on TI1

11: CC2 channel is configured as input, IC2 is mapped on TRC. This mode is working only if an internal trigger input is selected through the TS bit (TIMx_SMCR register)

Note: CC2S bits are writable only when the channel is OFF (CC2E = '0' in TIMx_CCER).

Bit 7 **OC1CE:** Output Compare 1 clear enable

0: OC1Ref is not affected by the ocref_clr_int signal

1: OC1Ref is cleared as soon as a High level is detected on ocref_clr_int signal (OCREF_CLR input or ETRF input)

Bits 6:4 **OC1M**: Output Compare 1 mode

These bits define the behavior of the output reference signal OC1REF from which OC1 and OC1N are derived. OC1REF is active high whereas OC1 and OC1N active level depends on CC1P and CC1NP bits.

0000: Frozen - The comparison between the output compare register TIMx_CCR1 and the counter TIMx_CNT has no effect on the outputs.(this mode is used to generate a timing base).

0001: Set channel 1 to active level on match. OC1REF signal is forced high when the counter TIMx_CNT matches the capture/compare register 1 (TIMx_CCR1).

0010: Set channel 1 to inactive level on match. OC1REF signal is forced low when the counter TIMx_CNT matches the capture/compare register 1 (TIMx_CCR1).

0011: Toggle - OC1REF toggles when TIMx_CNT=TIMx_CCR1.

0100: Force inactive level - OC1REF is forced low.

0101: Force active level - OC1REF is forced high.

0110: PWM mode 1 - In upcounting, channel 1 is active as long as TIMx_CNT<TIMx_CCR1 else inactive. In downcounting, channel 1 is inactive (OC1REF=‘0’) as long as TIMx_CNT>TIMx_CCR1 else active (OC1REF=’1’).

0111: PWM mode 2 - In upcounting, channel 1 is inactive as long as TIMx_CNT<TIMx_CCR1 else active. In downcounting, channel 1 is active as long as TIMx_CNT>TIMx_CCR1 else inactive.

1000: Retrigerrable OPM mode 1 - In up-counting mode, the channel is active until a trigger event is detected (on TRGI signal). Then, a comparison is performed as in PWM mode 1 and the channels becomes active again at the next update. In down-counting mode, the channel is inactive until a trigger event is detected (on TRGI signal). Then, a comparison is performed as in PWM mode 1 and the channels becomes inactive again at the next update.

1001: Retrigerrable OPM mode 2 - In up-counting mode, the channel is inactive until a trigger event is detected (on TRGI signal). Then, a comparison is performed as in PWM mode 2 and the channels becomes inactive again at the next update. In down-counting mode, the channel is active until a trigger event is detected (on TRGI signal). Then, a comparison is performed as in PWM mode 1 and the channels becomes active again at the next update.

1010: Reserved,

1011: Reserved,

1100: Combined PWM mode 1 - OC1REF has the same behavior as in PWM mode 1. OC1REFC is the logical OR between OC1REF and OC2REF.

1101: Combined PWM mode 2 - OC1REF has the same behavior as in PWM mode 2. OC1REFC is the logical AND between OC1REF and OC2REF.

1110: Asymmetric PWM mode 1 - OC1REF has the same behavior as in PWM mode 1. OC1REFC outputs OC1REF when the counter is counting up, OC2REF when it is counting down.

1111: Asymmetric PWM mode 2 - OC1REF has the same behavior as in PWM mode 2. OC1REFC outputs OC1REF when the counter is counting up, OC2REF when it is counting down.

Note: These bits can not be modified as long as LOCK level 3 has been programmed (LOCK bits in TIMx_BDTR register) and CC1S=’00’ (the channel is configured in output).

Note: In PWM mode, the OCREF level changes only when the result of the comparison changes or when the output compare mode switches from “frozen” mode to “PWM” mode.

Note: On channels having a complementary output, this bit field is preloaded. If the CCPC bit is set in the TIMx_CR2 register then the OC1M active bits take the new value from the preloaded bits only when a COM event is generated.

Bit 3 **OC1PE**: Output Compare 1 preload enable

0: Preload register on TIMx_CCR1 disabled. TIMx_CCR1 can be written at anytime, the new value is taken in account immediately.
1: Preload register on TIMx_CCR1 enabled. Read/Write operations access the preload register. TIMx_CCR1 preload value is loaded in the active register at each update event.

*Note: **1:** These bits can not be modified as long as LOCK level 3 has been programmed (LOCK bits in TIMx_BDTR register) and CC1S='00' (the channel is configured in output).*

***2:** The PWM mode can be used without validating the preload register only in one pulse mode (OPM bit set in TIMx_CR1 register). Else the behavior is not guaranteed.*

Bit 2 **OC1FE**: Output Compare 1 fast enable

This bit is used to accelerate the effect of an event on the trigger in input on the CC output.
0: CC1 behaves normally depending on counter and CCR1 values even when the trigger is ON. The minimum delay to activate CC1 output when an edge occurs on the trigger input is 5 clock cycles.
1: An active edge on the trigger input acts like a compare match on CC1 output. Then, OC is set to the compare level independently from the result of the comparison. Delay to sample the trigger input and to activate CC1 output is reduced to 3 clock cycles. OCFE acts only if the channel is configured in PWM1 or PWM2 mode.

Bits 1:0 **CC1S**: Capture/Compare 1 selection

This bit-field defines the direction of the channel (input/output) as well as the used input.
00: CC1 channel is configured as output
01: CC1 channel is configured as input, IC1 is mapped on TI1
10: CC1 channel is configured as input, IC1 is mapped on TI2
11: CC1 channel is configured as input, IC1 is mapped on TRC. This mode is working only if an internal trigger input is selected through TS bit (TIMx_SMCR register)

Note: CC1S bits are writable only when the channel is OFF (CC1E = '0' in TIMx_CCER).

Input capture mode

Bits 31:16 Reserved, must be kept at reset value.

Bits 15:12 **IC2F**: Input capture 2 filter

Bits 11:10 **IC2PSC[1:0]**: Input capture 2 prescaler

Bits 9:8 **CC2S**: Capture/Compare 2 selection

This bit-field defines the direction of the channel (input/output) as well as the used input.
00: CC2 channel is configured as output
01: CC2 channel is configured as input, IC2 is mapped on TI2
10: CC2 channel is configured as input, IC2 is mapped on TI1
11: CC2 channel is configured as input, IC2 is mapped on TRC. This mode is working only if an internal trigger input is selected through TS bit (TIMx_SMCR register)

Note: CC2S bits are writable only when the channel is OFF (CC2E = '0' in TIMx_CCER).

Bits 7:4 **IC1F[3:0]**: Input capture 1 filter

This bit-field defines the frequency used to sample TI1 input and the length of the digital filter applied to TI1. The digital filter is made of an event counter in which N consecutive events are needed to validate a transition on the output:

0000: No filter, sampling is done at f_{DTS}
0001: $f_{SAMPLING}=f_{CK_INT}$, N=2
0010: $f_{SAMPLING}=f_{CK_INT}$, N=4
0011: $f_{SAMPLING}=f_{CK_INT}$, N=8
0100: $f_{SAMPLING}=f_{DTS}/2$, N=6
0101: $f_{SAMPLING}=f_{DTS}/2$, N=8
0110: $f_{SAMPLING}=f_{DTS}/4$, N=6
0111: $f_{SAMPLING}=f_{DTS}/4$, N=8
1000: $f_{SAMPLING}=f_{DTS}/8$, N=6
1001: $f_{SAMPLING}=f_{DTS}/8$, N=8
1010: $f_{SAMPLING}=f_{DTS}/16$, N=5
1011: $f_{SAMPLING}=f_{DTS}/16$, N=6
1100: $f_{SAMPLING}=f_{DTS}/16$, N=8
1101: $f_{SAMPLING}=f_{DTS}/32$, N=5
1110: $f_{SAMPLING}=f_{DTS}/32$, N=6
1111: $f_{SAMPLING}=f_{DTS}/32$, N=8

Bits 3:2 **IC1PSC**: Input capture 1 prescaler

This bit-field defines the ratio of the prescaler acting on CC1 input (IC1). The prescaler is reset as soon as CC1E='0' (TIMx_CCER register).

00: no prescaler, capture is done each time an edge is detected on the capture input
01: capture is done once every 2 events
10: capture is done once every 4 events
11: capture is done once every 8 events

Bits 1:0 **CC1S**: Capture/Compare 1 Selection

This bit-field defines the direction of the channel (input/output) as well as the used input.

00: CC1 channel is configured as output
01: CC1 channel is configured as input, IC1 is mapped on TI1
10: CC1 channel is configured as input, IC1 is mapped on TI2
11: CC1 channel is configured as input, IC1 is mapped on TRC. This mode is working only if an internal trigger input is selected through TS bit (TIMx_SMCR register)

Note: CC1S bits are writable only when the channel is OFF (CC1E = '0' in TIMx_CCER).

25.4.8 TIM1 capture/compare mode register 2 (TIMx_CCMR2)

Address offset: 0x1C

Reset value: 0x0000 0000

Refer to the above CCMR1 register description.

31	30	29	28	27	26	25	24	23	22	21	20	19	18	17	16
Res.	Res.	Res.	Res.	Res.	Res.	Res.	OC4M[3]	Res.	Res.	Res.	Res.	Res.	Res.	Res.	OC3M[3]
Res.	Res.	Res.	Res.	Res.	Res.	Res.	Res.	Res.	Res.	Res.	Res.	Res.	Res.	Res.	Res.
							rw								rw

15	14	13	12	11	10	9	8	7	6	5	4	3	2	1	0
OC4 CE	OC4M[2:0]			OC4 PE	OC4 FE	CC4S[1:0]		OC3 CE.	OC3M[2:0]			OC3 PE	OC3 FE	CC3S[1:0]	
IC4F[3:0]				IC4PSC[1:0]				IC3F[3:0]				IC3PSC[1:0]			
rw	rw	rw	rw	rw	rw	rw	rw	rw	rw	rw	rw	rw	rw	rw	rw

Output compare mode

Bits 31:25 Reserved, must be kept at reset value.

Bit 24 **OC4M[3]**: Output Compare 4 mode - bit 3

Bits 23:17 Reserved, must be kept at reset value.

Bit 16 **OC3M[3]**: Output Compare 3 mode - bit 3

Bit 15 **OC4CE**: Output compare 4 clear enable

Bits 14:12 **OC4M**: Output compare 4 mode

Bit 11 **OC4PE**: Output compare 4 preload enable

Bit 10 **OC4FE**: Output compare 4 fast enable

Bits 9:8 **CC4S**: Capture/Compare 4 selection

This bit-field defines the direction of the channel (input/output) as well as the used input.
00: CC4 channel is configured as output
01: CC4 channel is configured as input, IC4 is mapped on TI4
10: CC4 channel is configured as input, IC4 is mapped on TI3
11: CC4 channel is configured as input, IC4 is mapped on TRC. This mode is working only if an internal trigger input is selected through TS bit (TIMx_SMCR register)

Note: CC4S bits are writable only when the channel is OFF (CC4E = '0' in TIMx_CCER).

Bit 7 **OC3CE:** Output compare 3 clear enable

Bits 6:4 **OC3M**: Output compare 3 mode

Bit 3 **OC3PE**: Output compare 3 preload enable

Bit 2 **OC3FE**: Output compare 3 fast enable

Bits 1:0 **CC3S**: Capture/Compare 3 selection

This bit-field defines the direction of the channel (input/output) as well as the used input.
00: CC3 channel is configured as output
01: CC3 channel is configured as input, IC3 is mapped on TI3
10: CC3 channel is configured as input, IC3 is mapped on TI4
11: CC3 channel is configured as input, IC3 is mapped on TRC. This mode is working only if an internal trigger input is selected through TS bit (TIMx_SMCR register)

Note: CC3S bits are writable only when the channel is OFF (CC3E = '0' in TIMx_CCER).

Input capture mode

Bits 31:16 Reserved, must be kept at reset value.

Bits 15:12 **IC4F**: Input capture 4 filter

Bits 11:10 **IC4PSC**: Input capture 4 prescaler

Bits 9:8 **CC4S**: Capture/Compare 4 selection

This bit-field defines the direction of the channel (input/output) as well as the used input.
00: CC4 channel is configured as output
01: CC4 channel is configured as input, IC4 is mapped on TI4
10: CC4 channel is configured as input, IC4 is mapped on TI3
11: CC4 channel is configured as input, IC4 is mapped on TRC. This mode is working only if an internal trigger input is selected through TS bit (TIMx_SMCR register)

Note: CC4S bits are writable only when the channel is OFF (CC4E = '0' in TIMx_CCER).

Bits 7:4 **IC3F**: Input capture 3 filter

Bits 3:2 **IC3PSC**: Input capture 3 prescaler

Bits 1:0 **CC3S**: Capture/compare 3 selection

This bit-field defines the direction of the channel (input/output) as well as the used input.
00: CC3 channel is configured as output
01: CC3 channel is configured as input, IC3 is mapped on TI3
10: CC3 channel is configured as input, IC3 is mapped on TI4
11: CC3 channel is configured as input, IC3 is mapped on TRC. This mode is working only if an internal trigger input is selected through TS bit (TIMx_SMCR register)

Note: CC3S bits are writable only when the channel is OFF (CC3E = '0' in TIMx_CCER).

25.4.9 TIM1 capture/compare enable register (TIMx_CCER)

Address offset: 0x20

Reset value: 0x0000 0000

31	30	29	28	27	26	25	24	23	22	21	20	19	18	17	16
Res.	Res.	Res.	Res.	Res.	Res.	Res.	Res.	Res.	Res.	CC6P	CC6E	Res.	Res.	CC5P	CC5E
										rw	rw			rw	rw

15	14	13	12	11	10	9	8	7	6	5	4	3	2	1	0
CC4NP	Res.	CC4P	CC4E	CC3NP	CC3NE	CC3P	CC3E	CC2NP	CC2NE	CC2P	CC2E	CC1NP	CC1NE	CC1P	CC1E
rw		rw	rw	rw	rw	rw	rw	rw	rw	rw	rw	rw	rw	rw	rw

Bits 31:22 Reserved, must be kept at reset value.

Bit 21 **CC6P**: Capture/Compare 6 output polarity
Refer to CC1P description

Bit 20 **CC6E**: Capture/Compare 6 output enable
Refer to CC1E description

Bits 19:18 Reserved, must be kept at reset value.

Bit 17 **CC5P**: Capture/Compare 5 output polarity
Refer to CC1P description

Bit 16 **CC5E**: Capture/Compare 5 output enable
Refer to CC1E description

Bit 15 **CC4NP**: Capture/Compare 4 complementary output polarity
Refer to CC1NP description

Bit 14 Reserved, must be kept at reset value.

Bit 13 **CC4P**: Capture/Compare 4 output polarity
Refer to CC1P description

Bit 12 **CC4E**: Capture/Compare 4 output enable
Refer to CC1E description

Bit 11 **CC3NP**: Capture/Compare 3 complementary output polarity
Refer to CC1NP description

Bit 10 **CC3NE**: Capture/Compare 3 complementary output enable
Refer to CC1NE description

Bit 9 **CC3P**: Capture/Compare 3 output polarity
Refer to CC1P description

Bit 8 **CC3E**: Capture/Compare 3 output enable
Refer to CC1E description

Bit 7 **CC2NP**: Capture/Compare 2 complementary output polarity
Refer to CC1NP description

Bit 6 **CC2NE**: Capture/Compare 2 complementary output enable
Refer to CC1NE description

Bit 5 **CC2P**: Capture/Compare 2 output polarity
Refer to CC1P description

Bit 4 **CC2E**: Capture/Compare 2 output enable
Refer to CC1E description

Bit 3 **CC1NP**: Capture/Compare 1 complementary output polarity
CC1 channel configured as output:
0: OC1N active high.
1: OC1N active low.
CC1 channel configured as input:
This bit is used in conjunction with CC1P to define the polarity of TI1FP1 and TI2FP1. Refer to CC1P description.

Note: This bit is not writable as soon as LOCK level 2 or 3 has been programmed (LOCK bits in TIMx_BDTR register) and CC1S="00" (channel configured as output).

Note: On channels having a complementary output, this bit is preloaded. If the CCPC bit is set in the TIMx_CR2 register then the CC1NP active bit takes the new value from the preloaded bit only when a Commutation event is generated.

Bit 2 **CC1NE**: Capture/Compare 1 complementary output enable
0: Off - OC1N is not active. OC1N level is then function of MOE, OSSI, OSSR, OIS1, OIS1N and CC1E bits.
1: On - OC1N signal is output on the corresponding output pin depending on MOE, OSSI, OSSR, OIS1, OIS1N and CC1E bits.

Note: On channels having a complementary output, this bit is preloaded. If the CCPC bit is set in the TIMx_CR2 register then the CC1NE active bit takes the new value from the preloaded bit only when a Commutation event is generated.

Bit 1 **CC1P**: Capture/Compare 1 output polarity

CC1 channel configured as output:

0: OC1 active high

1: OC1 active low

CC1 channel configured as input: CC1NP/CC1P bits select the active polarity of TI1FP1 and TI2FP1 for trigger or capture operations.

00: non-inverted/rising edge. The circuit is sensitive to TIxFP1 rising edge (capture or trigger operations in reset, external clock or trigger mode), TIxFP1 is not inverted (trigger operation in gated mode or encoder mode).

01: inverted/falling edge. The circuit is sensitive to TIxFP1 falling edge (capture or trigger operations in reset, external clock or trigger mode), TIxFP1 is inverted (trigger operation in gated mode or encoder mode).

10: reserved, do not use this configuration.

11: non-inverted/both edges/ The circuit is sensitive to both TIxFP1 rising and falling edges (capture or trigger operations in reset, external clock or trigger mode), TIxFP1 is not inverted (trigger operation in gated mode). This configuration must not be used in encoder mode.

Note: This bit is not writable as soon as LOCK level 2 or 3 has been programmed (LOCK bits in TIMx_BDTR register).

Note: On channels having a complementary output, this bit is preloaded. If the CCPC bit is set in the TIMx_CR2 register then the CC1P active bit takes the new value from the preloaded bit only when a Commutation event is generated.

Bit 0 **CC1E**: Capture/Compare 1 output enable

CC1 channel configured as output:

0: Off - OC1 is not active. OC1 level is then function of MOE, OSSI, OSSR, OIS1, OIS1N and CC1NE bits.

1: On - OC1 signal is output on the corresponding output pin depending on MOE, OSSI, OSSR, OIS1, OIS1N and CC1NE bits.

CC1 channel configured as input: This bit determines if a capture of the counter value can actually be done into the input capture/compare register 1 (TIMx_CCR1) or not.

0: Capture disabled.

1: Capture enabled.

Note: On channels having a complementary output, this bit is preloaded. If the CCPC bit is set in the TIMx_CR2 register then the CC1E active bit takes the new value from the preloaded bit only when a Commutation event is generated.

Table 112. Output control bits for complementary OCx and OCxN channels with break feature

Control bits					Output states[1]	
MOE bit	OSSI bit	OSSR bit	CCxE bit	CCxNE bit	OCx output state	OCxN output state
1	X	X	0	0	Output disabled (not driven by the timer: Hi-Z) OCx=0, OCxN=0	
		0	0	1	Output disabled (not driven by the timer: Hi-Z) OCx=0	OCxREF + Polarity OCxN = OCxREF xor CCxNP
		0	1	0	OCxREF + Polarity OCx=OCxREF xor CCxP	Output Disabled (not driven by the timer: Hi-Z) OCxN=0
		X	1	1	OCREF + Polarity + dead-time	Complementary to OCREF (not OCREF) + Polarity + dead-time
		1	0	1	Off-State (output enabled with inactive state) OCx=CCxP	OCxREF + Polarity OCxN = OCxREF x or CCxNP
		1	1	0	OCxREF + Polarity OCx=OCxREF xor CCxP	Off-State (output enabled with inactive state) OCxN=CCxNP
0	0	X	X	X	Output disabled (not driven by the timer anymore). The output state is defined by the GPIO controller and can be High, Low or Hi-Z.	
	1		0	0		
			0	1	Off-State (output enabled with inactive state) Asynchronously: OCx=CCxP, OCxN=CCxNP (if BRK or BRK2 is triggered). Then (this is valid only if BRK is triggered), if the clock is present: OCx=OISx and OCxN=OISxN after a dead-time, assuming that OISx and OISxN do not correspond to OCX and OCxN both in active state (may cause a short circuit when driving switches in half-bridge configuration). **Note**: BRK2 can only be used if OSSI = OSSR = 1.	
			1	0		
			1	1		

1. When both outputs of a channel are not used (control taken over by GPIO), the OISx, OISxN, CCxP and CCxNP bits must be kept cleared.

Note: The state of the external I/O pins connected to the complementary OCx and OCxN channels depends on the OCx and OCxN channel state and the GPIO registers.

25.4.10 TIM1 counter (TIMx_CNT)

Address offset: 0x24

Reset value: 0x0000 0000

31	30	29	28	27	26	25	24	23	22	21	20	19	18	17	16
UIF CPY	Res.	Res.	Res.	Res.	Res.	Res.	Res.	Re s.	Res.	Res.	Res.	Res.	Res.	Res.	Res.
r															

15	14	13	12	11	10	9	8	7	6	5	4	3	2	1	0
CNT[15:0]															
rw	rw	rw	rw	rw	rw	rw	rw	rw	rw	rw	rw	rw	rw	rw	rw

Bit 31 **UIFCPY**: UIF copy

This bit is a read-only copy of the UIF bit of the TIMx_ISR register. If the UIFREMAP bit in the TIMxCR1 is reset, bit 31 is reserved and read at 0.

Bits 30:16 Reserved, must be kept at reset value.

Bits 15:0 **CNT[15:0]**: Counter value

25.4.11 TIM1 prescaler (TIMx_PSC)

Address offset: 0x28

Reset value: 0x0000

15	14	13	12	11	10	9	8	7	6	5	4	3	2	1	0
PSC[15:0]															
rw	rw	rw	rw	rw	rw	rw	rw	rw	rw	rw	rw	rw	rw	rw	rw

Bits 15:0 **PSC[15:0]**: Prescaler value

The counter clock frequency (CK_CNT) is equal to f_{CK_PSC} / (PSC[15:0] + 1).
PSC contains the value to be loaded in the active prescaler register at each update event (including when the counter is cleared through UG bit of TIMx_EGR register or through trigger controller when configured in “reset mode”).

25.4.12 TIM1 auto-reload register (TIMx_ARR)

Address offset: 0x2C

Reset value: 0xFFFF

15	14	13	12	11	10	9	8	7	6	5	4	3	2	1	0
ARR[15:0]															
rw	rw	rw	rw	rw	rw	rw	rw	rw	rw	rw	rw	rw	rw	rw	rw

Bits 15:0 **ARR[15:0]**: Prescaler value

ARR is the value to be loaded in the actual auto-reload register.
Refer to the *Section 25.3.1: Time-base unit on page 621* for more details about ARR update and behavior.
The counter is blocked while the auto-reload value is null.

25.4.13 TIM1 repetition counter register (TIMx_RCR)

Address offset: 0x30

Reset value: 0x0000

15	14	13	12	11	10	9	8	7	6	5	4	3	2	1	0
REP[15:0]															
rw	rw	rw	rw	rw	rw	rw	rw	rw	rw	rw	rw	rw	rw	rw	rw

Bits 15:0 **REP[15:0]**: Repetition counter value

These bits allow the user to set-up the update rate of the compare registers (i.e. periodic transfers from preload to active registers) when preload registers are enable, as well as the update interrupt generation rate, if this interrupt is enable.

Each time the REP_CNT related downcounter reaches zero, an update event is generated and it restarts counting from REP value. As REP_CNT is reloaded with REP value only at the repetition update event U_RC, any write to the TIMx_RCR register is not taken in account until the next repetition update event.

It means in PWM mode (REP+1) corresponds to:

the number of PWM periods in edge-aligned mode

the number of half PWM period in center-aligned mode.

25.4.14 TIM1 capture/compare register 1 (TIMx_CCR1)

Address offset: 0x34

Reset value: 0x0000

15	14	13	12	11	10	9	8	7	6	5	4	3	2	1	0
CCR1[15:0]															
rw	rw	rw	rw	rw	rw	rw	rw	rw	rw	rw	rw	rw	rw	rw	rw

Bits 15:0 **CCR1[15:0]**: Capture/Compare 1 value

If channel CC1 is configured as output:: CCR1 is the value to be loaded in the actual capture/compare 1 register (preload value).

It is loaded permanently if the preload feature is not selected in the TIMx_CCMR1 register (bit OC1PE). Else the preload value is copied in the active capture/compare 1 register when an update event occurs.

The active capture/compare register contains the value to be compared to the counter TIMx_CNT and signaled on OC1 output.

If channel CC1 is configured as input:: CR1 is the counter value transferred by the last input capture 1 event (IC1).

25.4.15 TIM1 capture/compare register 2 (TIMx_CCR2)

Address offset: 0x38

Reset value: 0x0000

15	14	13	12	11	10	9	8	7	6	5	4	3	2	1	0
CCR2[15:0]															
rw	rw	rw	rw	rw	rw	rw	rw	rw	rw	rw	rw	rw	rw	rw	rw

Bits 15:0 **CCR2[15:0]**: Capture/Compare 2 value

If channel CC2 is configured as output: CCR2 is the value to be loaded in the actual capture/compare 2 register (preload value).

It is loaded permanently if the preload feature is not selected in the TIMx_CCMR1 register (bit OC2PE). Else the preload value is copied in the active capture/compare 2 register when an update event occurs.

The active capture/compare register contains the value to be compared to the counter TIMx_CNT and signaled on OC2 output.

If channel CC2 is configured as input: CCR2 is the counter value transferred by the last input capture 2 event (IC2).

25.4.16 TIM1 capture/compare register 3 (TIMx_CCR3)

Address offset: 0x3C

Reset value: 0x0000

15	14	13	12	11	10	9	8	7	6	5	4	3	2	1	0
CCR3[15:0]															
rw	rw	rw	rw	rw	rw	rw	rw	rw	rw	rw	rw	rw	rw	rw	rw

Bits 15:0 **CCR3[15:0]**: Capture/Compare value

If channel CC3 is configured as output: CCR3 is the value to be loaded in the actual capture/compare 3 register (preload value).

It is loaded permanently if the preload feature is not selected in the TIMx_CCMR2 register (bit OC3PE). Else the preload value is copied in the active capture/compare 3 register when an update event occurs.

The active capture/compare register contains the value to be compared to the counter TIMx_CNT and signalled on OC3 output.

If channel CC3 is configured as input: CCR3 is the counter value transferred by the last input capture 3 event (IC3).

25.4.17 TIM1 capture/compare register 4 (TIMx_CCR4)

Address offset: 0x40

Reset value: 0x0000

15	14	13	12	11	10	9	8	7	6	5	4	3	2	1	0
CCR4[15:0]															
rw	rw	rw	rw	rw	rw	rw	rw	rw	rw	rw	rw	rw	rw	rw	rw

Bits 15:0 **CCR4[15:0]**: Capture/Compare value

If channel CC4 is configured as output: CCR4 is the value to be loaded in the actual capture/compare 4 register (preload value).

It is loaded permanently if the preload feature is not selected in the TIMx_CCMR2 register (bit OC4PE). Else the preload value is copied in the active capture/compare 4 register when an update event occurs.

The active capture/compare register contains the value to be compared to the counter TIMx_CNT and signalled on OC4 output.

If channel CC4 is configured as input: CCR4 is the counter value transferred by the last input capture 4 event (IC4).

25.4.18 TIM1 break and dead-time register (TIMx_BDTR)

Address offset: 0x44

Reset value: 0x0000 0000

31	30	29	28	27	26	25	24	23	22	21	20	19	18	17	16
Res.	Res.	Res.	Res.	Res.	Res.	BK2P	BK2E	BK2F[3:0]				BKF[3:0]			
						rw	rw	rw	rw	rw	rw	rw	rw	rw	rw

15	14	13	12	11	10	9	8	7	6	5	4	3	2	1	0
MOE	AOE	BKP	BKE	OSSR	OSSI	LOCK[1:0]		DTG[7:0]							
rw	rw	rw	rw	rw	rw	rw	rw	rw	rw	rw	rw	rw	rw	rw	rw

Note: As the bits BK2P, BK2E, BK2F[3:0], BKF[3:0], AOE, BKP, BKE, OSSI, OSSR and DTG[7:0] can be write-locked depending on the LOCK configuration, it can be necessary to configure all of them during the first write access to the TIMx_BDTR register.

Bits 31:26 Reserved, must be kept at reset value.

Bit 25 **BK2P**: Break 2 polarity

0: Break input BRK2 is active low

1: Break input BRK2 is active high

Note: This bit cannot be modified as long as LOCK level 1 has been programmed (LOCK bits in TIMx_BDTR register).

Note: Any write operation to this bit takes a delay of 1 APB clock cycle to become effective.

Bit 24 **BK2E**: Break 2 enable

This bit enables the complete break 2 protection (including all sources connected to bk_acth and BKIN sources, as per *Figure 206: Break and Break2 circuitry overview*).

0: Break2 function disabled

1: Break2 function enabled

Note: The BRKIN2 must only be used with OSSR = OSSI = 1.

Note: This bit cannot be modified when LOCK level 1 has been programmed (LOCK bits in TIMx_BDTR register).

Note: Any write operation to this bit takes a delay of 1 APB clock cycle to become effective.

Bits 23:20 **BK2F[3:0]**: Break 2 filter

This bit-field defines the frequency used to sample BRK2 input and the length of the digital filter applied to BRK2. The digital filter is made of an event counter in which N consecutive events are needed to validate a transition on the output:

0000: No filter, BRK2 acts asynchronously
0001: $f_{SAMPLING}=f_{CK_INT}$, N=2
0010: $f_{SAMPLING}=f_{CK_INT}$, N=4
0011: $f_{SAMPLING}=f_{CK_INT}$, N=8
0100: $f_{SAMPLING}=f_{DTS}/2$, N=6
0101: $f_{SAMPLING}=f_{DTS}/2$, N=8
0110: $f_{SAMPLING}=f_{DTS}/4$, N=6
0111: $f_{SAMPLING}=f_{DTS}/4$, N=8
1000: $f_{SAMPLING}=f_{DTS}/8$, N=6
1001: $f_{SAMPLING}=f_{DTS}/8$, N=8
1010: $f_{SAMPLING}=f_{DTS}/16$, N=5
1011: $f_{SAMPLING}=f_{DTS}/16$, N=6
1100: $f_{SAMPLING}=f_{DTS}/16$, N=8
1101: $f_{SAMPLING}=f_{DTS}/32$, N=5
1110: $f_{SAMPLING}=f_{DTS}/32$, N=6
1111: $f_{SAMPLING}=f_{DTS}/32$, N=8

Note: This bit cannot be modified when LOCK level 1 has been programmed (LOCK bits in TIMx_BDTR register).

Bits 19:16 **BKF[3:0]**: Break filter

This bit-field defines the frequency used to sample BRK input and the length of the digital filter applied to BRK. The digital filter is made of an event counter in which N consecutive events are needed to validate a transition on the output:

0000: No filter, BRK acts asynchronously
0001: $f_{SAMPLING}=f_{CK_INT}$, N=2
0010: $f_{SAMPLING}=f_{CK_INT}$, N=4
0011: $f_{SAMPLING}=f_{CK_INT}$, N=8
0100: $f_{SAMPLING}=f_{DTS}/2$, N=6
0101: $f_{SAMPLING}=f_{DTS}/2$, N=8
0110: $f_{SAMPLING}=f_{DTS}/4$, N=6
0111: $f_{SAMPLING}=f_{DTS}/4$, N=8
1000: $f_{SAMPLING}=f_{DTS}/8$, N=6
1001: $f_{SAMPLING}=f_{DTS}/8$, N=8
1010: $f_{SAMPLING}=f_{DTS}/16$, N=5
1011: $f_{SAMPLING}=f_{DTS}/16$, N=6
1100: $f_{SAMPLING}=f_{DTS}/16$, N=8
1101: $f_{SAMPLING}=f_{DTS}/32$, N=5
1110: $f_{SAMPLING}=f_{DTS}/32$, N=6
1111: $f_{SAMPLING}=f_{DTS}/32$, N=8

Note: This bit cannot be modified when LOCK level 1 has been programmed (LOCK bits in TIMx_BDTR register).

Bit 15 **MOE**: Main output enable

This bit is cleared asynchronously by hardware as soon as one of the break inputs is active (BRK or BRK2). It is set by software or automatically depending on the AOE bit. It is acting only on the channels which are configured in output.

0: In response to a break 2 event. OC and OCN outputs are disabled

In response to a break event or if MOE is written to 0: OC and OCN outputs are disabled or forced to idle state depending on the OSSI bit.

1: OC and OCN outputs are enabled if their respective enable bits are set (CCxE, CCxNE in TIMx_CCER register).

See OC/OCN enable description for more details (*Section 25.4.9: TIM1 capture/compare enable register (TIMx_CCER)*).

Bit 14 **AOE**: Automatic output enable

0: MOE can be set only by software

1: MOE can be set by software or automatically at the next update event (if none of the break inputs BRK and BRK2 is active)

Note: This bit can not be modified as long as LOCK level 1 has been programmed (LOCK bits in TIMx_BDTR register).

Bit 13 **BKP**: Break polarity

0: Break input BRK is active low

1: Break input BRK is active high

Note: This bit can not be modified as long as LOCK level 1 has been programmed (LOCK bits in TIMx_BDTR register).

Note: Any write operation to this bit takes a delay of 1 APB clock cycle to become effective.

Bit 12 **BKE**: Break enable

This bit enables the complete break protection (including all sources connected to bk_acth and BKIN sources, as per *Figure 206: Break and Break2 circuitry overview*).

0: Break function disabled

1: Break function enabled

Note: This bit cannot be modified when LOCK level 1 has been programmed (LOCK bits in TIMx_BDTR register).

Note: Any write operation to this bit takes a delay of 1 APB clock cycle to become effective.

Bit 11 **OSSR**: Off-state selection for Run mode

This bit is used when MOE=1 on channels having a complementary output which are configured as outputs. OSSR is not implemented if no complementary output is implemented in the timer.

See OC/OCN enable description for more details (*Section 25.4.9: TIM1 capture/compare enable register (TIMx_CCER)*).

0: When inactive, OC/OCN outputs are disabled (the timer releases the output control which is taken over by the GPIO logic, which forces a Hi-Z state).

1: When inactive, OC/OCN outputs are enabled with their inactive level as soon as CCxE=1 or CCxNE=1 (the output is still controlled by the timer).

Note: This bit can not be modified as soon as the LOCK level 2 has been programmed (LOCK bits in TIMx_BDTR register).

Bit 10 **OSSI**: Off-state selection for Idle mode

This bit is used when MOE=0 due to a break event or by a software write, on channels configured as outputs.
See OC/OCN enable description for more details (*Section 25.4.9: TIM1 capture/compare enable register (TIMx_CCER)*).
0: When inactive, OC/OCN outputs are disabled (the timer releases the output control which is taken over by the GPIO logic and which imposes a Hi-Z state).
1: When inactive, OC/OCN outputs are first forced with their inactive level then forced to their idle level after the deadtime. The timer maintains its control over the output.

Note: This bit can not be modified as soon as the LOCK level 2 has been programmed (LOCK bits in TIMx_BDTR register).

Bits 9:8 **LOCK[1:0]**: Lock configuration

These bits offer a write protection against software errors.
00: LOCK OFF - No bit is write protected.
01: LOCK Level 1 = DTG bits in TIMx_BDTR register, OISx and OISxN bits in TIMx_CR2 register and BKE/BKP/AOE bits in TIMx_BDTR register can no longer be written.
10: LOCK Level 2 = LOCK Level 1 + CC Polarity bits (CCxP/CCxNP bits in TIMx_CCER register, as long as the related channel is configured in output through the CCxS bits) as well as OSSR and OSSI bits can no longer be written.
11: LOCK Level 3 = LOCK Level 2 + CC Control bits (OCxM and OCxPE bits in TIMx_CCMRx registers, as long as the related channel is configured in output through the CCxS bits) can no longer be written.

Note: The LOCK bits can be written only once after the reset. Once the TIMx_BDTR register has been written, their content is frozen until the next reset.

Bits 7:0 **DTG[7:0]**: Dead-time generator setup

This bit-field defines the duration of the dead-time inserted between the complementary outputs. DT correspond to this duration.
DTG[7:5]=0xx => DT=DTG[7:0]x t_{dtg} with $t_{dtg}=t_{DTS}$.
DTG[7:5]=10x => DT=(64+DTG[5:0])xt_{dtg} with $T_{dtg}=2xt_{DTS}$.
DTG[7:5]=110 => DT=(32+DTG[4:0])xt_{dtg} with $T_{dtg}=8xt_{DTS}$.
DTG[7:5]=111 => DT=(32+DTG[4:0])xt_{dtg} with $T_{dtg}=16xt_{DTS}$.
Example if T_{DTS}=125ns (8MHz), dead-time possible values are:
0 to 15875 ns by 125 ns steps,
16 us to 31750 ns by 250 ns steps,
32 us to 63us by 1 us steps,
64 us to 126 us by 2 us steps

Note: This bit-field can not be modified as long as LOCK level 1, 2 or 3 has been programmed (LOCK bits in TIMx_BDTR register).

25.4.19 TIM1 DMA control register (TIMx_DCR)

Address offset: 0x48

Reset value: 0x0000

15	14	13	12	11	10	9	8	7	6	5	4	3	2	1	0
Res.	Res.	Res.	DBL[4:0]					Res.	Res.	Res.	DBA[4:0]				
			rw	rw	rw	rw	rw				rw	rw	rw	rw	rw

Bits 15:13 Reserved, must be kept at reset value.

Bits 12:8 **DBL[4:0]**: DMA burst length

This 5-bit vector defines the length of DMA transfers (the timer recognizes a burst transfer when a read or a write access is done to the TIMx_DMAR address), i.e. the number of transfers. Transfers can be in half-words or in bytes (see example below).

00000: 1 transfer
00001: 2 transfers
00010: 3 transfers
...
10001: 18 transfers

Example: Let us consider the following transfer: DBL = 7 bytes & DBA = TIM2_CR1.

– If DBL = 7 bytes and DBA = TIM2_CR1 represents the address of the byte to be transferred, the address of the transfer should be given by the following equation:

(TIMx_CR1 address) + DBA + (DMA index), where DMA index = DBL

In this example, 7 bytes are added to (TIMx_CR1 address) + DBA, which gives us the address from/to which the data will be copied. In this case, the transfer is done to 7 registers starting from the following address: (TIMx_CR1 address) + DBA

According to the configuration of the DMA Data Size, several cases may occur:

– If you configure the DMA Data Size in half-words, 16-bit data will be transferred to each of the 7 registers.

– If you configure the DMA Data Size in bytes, the data will also be transferred to 7 registers: the first register will contain the first MSB byte, the second register, the first LSB byte and so on. So with the transfer Timer, you also have to specify the size of data transferred by DMA.

Bits 7:5 Reserved, must be kept at reset value.

Bits 4:0 **DBA[4:0]**: DMA base address

This 5-bits vector defines the base-address for DMA transfers (when read/write access are done through the TIMx_DMAR address). DBA is defined as an offset starting from the address of the TIMx_CR1 register.

Example:
00000: TIMx_CR1,
00001: TIMx_CR2,
00010: TIMx_SMCR,
...

25.4.20 TIM1 DMA address for full transfer (TIMx_DMAR)

Address offset: 0x4C

Reset value: 0x0000

31	30	29	28	27	26	25	24	23	22	21	20	19	18	17	16
DMAB[31:16]															
rw	rw	rw	rw	rw	rw	rw	rw	rw	rw	rw	rw	rw	rw	rw	rw
15	14	13	12	11	10	9	8	7	6	5	4	3	2	1	0
DMAB[15:0]															
rw	rw	rw	rw	rw	rw	rw	rw	rw	rw	rw	rw	rw	rw	rw	rw

Bits 31:0 **DMAB[31:0]**: DMA register for burst accesses

A read or write operation to the DMAR register accesses the register located at the address (TIMx_CR1 address) + (DBA + DMA index) x 4

where TIMx_CR1 address is the address of the control register 1, DBA is the DMA base address configured in TIMx_DCR register, DMA index is automatically controlled by the DMA transfer, and ranges from 0 to DBL (DBL configured in TIMx_DCR).

25.4.21 TIM1 option register 1 (TIM1_OR1)

Address offset: 0x50

Reset value: 0x0000 0000

31	30	29	28	27	26	25	24	23	22	21	20	19	18	17	16
Res.	Res.	Res.	Res.	Res.	Res.	Res.	Res.	Res.	Res.	Res.	Res.	Res.	Res.	Res.	Res.

15	14	13	12	11	10	9	8	7	6	5	4	3	2	1	0
Res.	Res.	Res.	Res.	Res.	Res.	Res.	Res.	Res.	Res.	Res.	TI1_RMP	Res.	Res.	ETR_ADC1_RMP	
											rw			rw	rw

Bits 31:5 Reserved, must be kept at reset value

Bit 4 **TI1_RMP**: Input Capture 1 remap

0: TIM1 input capture 1 is connected to I/O

1: TIM1 input capture 1 is connected to COMP1 output.

Bits 3:2 Reserved, must be kept at reset value

Bits 1:0 **ETR_ADC1_RMP**: External trigger remap on ADC1 analog watchdog

00 : TIM1_ETR is not connected to ADC1 AWDx. This configuration must be selected when the ETR comes from the I/O.

01 : TIM1_ETR is connected to ADC1 AWD1.

10 : TIM1_ETR is connected to ADC1 AWD2.

11 : TIM1_ETR is connected to ADC1 AWD3.

Note: ADC1 AWDx sources are 'ORed' with the TIM1_ETR input signals. When ADC1 AWDx is used, it is necessary to make sure that the corresponding TIM1_ETR input pin is not enabled in the alternate function controller. Refer to Figure 185: TIM1 ETR input circuitry.

25.4.22 TIM1 capture/compare mode register 3 (TIMx_CCMR3)

Address offset: 0x54

Reset value: 0x0000 0000

Refer to the above CCMR1 register description. Channels 5 and 6 can only be configured in output.

31	30	29	28	27	26	25	24	23	22	21	20	19	18	17	16
Res.	Res.	Res.	Res.	Res.	Res.	Res.	OC6M[3]	Res.	Res.	Res.	Res.	Res.	Res.	Res.	OC5M[3]
							rw								rw

15	14	13	12	11	10	9	8	7	6	5	4	3	2	1	0
OC6 CE	OC6M[2:0]			OC6 PE	OC6FE	Res.	Res.	OC5 CE.	OC5M[2:0]			OC5PE	OC5FE	Res.	Res.
rw	rw	rw	rw	rw	rw			rw	rw	rw	rw	rw	rw		

Output compare mode

Bits 31:25 Reserved, must be kept at reset value.

Bit 24 **OC6M[3]**: Output Compare 6 mode - bit 3

Bits 23:17 Reserved, must be kept at reset value.

Bit 16 **OC5M[3]**: Output Compare 5 mode - bit 3

Bit 15 **OC6CE**: Output compare 6 clear enable

Bits 14:12 **OC6M**: Output compare 6 mode

Bit 11 **OC6PE**: Output compare 6 preload enable

Bit 10 **OC6FE**: Output compare 6 fast enable

Bits 9:8 Reserved, must be kept at reset value.

Bit 7 **OC5CE:** Output compare 5 clear enable

Bits 6:4 **OC5M**: Output compare 5 mode

Bit 3 **OC5PE**: Output compare 5 preload enable

Bit 2 **OC5FE**: Output compare 5 fast enable

Bits 1:0 Reserved, must be kept at reset value.

25.4.23 TIM1 capture/compare register 5 (TIMx_CCR5)

Address offset: 0x58

Reset value: 0x0000 0000

31	30	29	28	27	26	25	24	23	22	21	20	19	18	17	16
GC5C3	GC5C2	GC5C1	Res.	Res.	Res.	Res.	Res.	Res.	Res.	Res.	Res.	Res.	Res.	Res.	Res.
rw	rw	rw													

15	14	13	12	11	10	9	8	7	6	5	4	3	2	1	0
CCR5[15:0]															
rw	rw	rw	rw	rw	rw	rw	rw	rw	rw	rw	rw	rw	rw	rw	rw

Bit 31 **GC5C3**: Group Channel 5 and Channel 3

Distortion on Channel 3 output:

0: No effect of OC5REF on OC3REFC

1: OC3REFC is the logical AND of OC3REFC and OC5REF

This bit can either have immediate effect or be preloaded and taken into account after an update event (if preload feature is selected in TIMxCCMR2).

Note: it is also possible to apply this distortion on combined PWM signals.

Bit 30 **GC5C2**: Group Channel 5 and Channel 2

Distortion on Channel 2 output:

0: No effect of OC5REF on OC2REFC

1: OC2REFC is the logical AND of OC2REFC and OC5REF

This bit can either have immediate effect or be preloaded and taken into account after an update event (if preload feature is selected in TIMxCCMR1).

Note: it is also possible to apply this distortion on combined PWM signals.

Bit 29 **GC5C1**: Group Channel 5 and Channel 1

Distortion on Channel 1 output:

0: No effect of OC5REF on OC1REFC5

1: OC1REFC is the logical AND of OC1REFC and OC5REF

This bit can either have immediate effect or be preloaded and taken into account after an update event (if preload feature is selected in TIMxCCMR1).

Note: it is also possible to apply this distortion on combined PWM signals.

Bits 28:16 Reserved, must be kept at reset value.

Bits 15:0 **CCR5[15:0]**: Capture/Compare 5 value

CCR5 is the value to be loaded in the actual capture/compare 5 register (preload value).

It is loaded permanently if the preload feature is not selected in the TIMx_CCMR3 register (bit OC5PE). Else the preload value is copied in the active capture/compare 5 register when an update event occurs.

The active capture/compare register contains the value to be compared to the counter TIMx_CNT and signaled on OC5 output.

25.4.24 TIM1 capture/compare register 6 (TIMx_CCR6)

Address offset: 0x5C

Reset value: 0x0000

15	14	13	12	11	10	9	8	7	6	5	4	3	2	1	0
CCR6[15:0]															
rw	rw	rw	rw	rw	rw	rw	rw	rw	rw	rw	rw	rw	rw	rw	rw

Bits 15:0 **CCR6[15:0]**: Capture/Compare 6 value

CCR6 is the value to be loaded in the actual capture/compare 6 register (preload value).

It is loaded permanently if the preload feature is not selected in the TIMx_CCMR3 register (bit OC6PE). Else the preload value is copied in the active capture/compare 6 register when an update event occurs.

The active capture/compare register contains the value to be compared to the counter TIMx_CNT and signaled on OC6 output.

25.4.25 TIM1 option register 2 (TIM1_OR2)

Address offset: 0x60

Reset value: 0x0000 0001

31	30	29	28	27	26	25	24	23	22	21	20	19	18	17	16
Res.	Res.	Res.	Res.	Res.	Res.	Res.	Res.	Res.	Res.	Res.	Res.	Res.	Res.	Res.	ETR SEL [2]
															rw

15	14	13	12	11	10	9	8	7	6	5	4	3	2	1	0
ETRSEL[1:0]		Res.	Res.	BK CMP2P	BK CMP1P	Res.	Res.	Res.	Res.	Res.	Res.	Res.	BK CMP2E	BK CMP1E	BKINE
rw	rw			rw	rw								rw	rw	rw

Bits 31:17 Reserved, must be kept at reset value

Bits 16:14 **ETRSEL[2:0]**: ETR source selection

These bits select the ETR input source.

000: TIM1_ETR source is selected with the ETR_ADC3_RMP and ETR_ADC1_RMP bitfield in TIM1_OR1 register

001: COMP1 output connected to ETR input

010: COMP2 output connected to ETR input

Others: Reserved

Note: These bits can not be modified as long as LOCK level 1 has been programmed (LOCK bits in TIMx_BDTR register).

Bits 13:12 Reserved, must be kept at reset value

Bit 11 **BKCMP2P**: BRK COMP2 input polarity

This bit selects the COMP2 input sensitivity. It must be programmed together with the BKP polarity bit.

0: COMP2 input is active high

1: COMP2 input is active low

Note: This bit can not be modified as long as LOCK level 1 has been programmed (LOCK bits in TIMx_BDTR register).

Bit 10 **BKCMP1P**: BRK COMP1 input polarity

This bit selects the COMP1 input sensitivity. It must be programmed together with the BKP polarity bit.

0: COMP1 input is active high

1: COMP1 input is active low

Note: This bit can not be modified as long as LOCK level 1 has been programmed (LOCK bits in TIMx_BDTR register).

Bit 9 **BKINP**: BRK BKIN input polarity

This bit selects the BKIN alternate function input sensitivity. It must be programmed together with the BKP polarity bit.

0: BKIN input is active high

1: BKIN input is active low

Note: This bit can not be modified as long as LOCK level 1 has been programmed (LOCK bits in TIMx_BDTR register).

Bit 8 Reserved, must be kept at reset value

Bits 7:3 Reserved, must be kept at reset value

Bit 2 **BKCMP2E**: BRK COMP2 enable

This bit enables the COMP2 for the timer's BRK input. COMP2 output is 'ORed' with the other BRK sources.

0: COMP2 input disabled

1: COMP2 input enabled

Note: This bit can not be modified as long as LOCK level 1 has been programmed (LOCK bits in TIMx_BDTR register).

Bit 1 **BKCMP1E**: BRK COMP1 enable

This bit enables the COMP1 for the timer's BRK input. COMP1 output is 'ORed' with the other BRK sources.

0: COMP1 input disabled

1: COMP1 input enabled

Note: This bit can not be modified as long as LOCK level 1 has been programmed (LOCK bits in TIMx_BDTR register).

Bit 0 **BKINE**: BRK BKIN input enable

This bit enables the BKIN alternate function input for the timer's BRK input. BKIN input is 'ORed' with the other BRK sources.

0: BKIN input disabled

1: BKIN input enabled

Note: This bit can not be modified as long as LOCK level 1 has been programmed (LOCK bits in TIMx_BDTR register).

Note: Refer to Figure 185: TIM1 ETR input circuitry and to Figure 206: Break and Break2 circuitry overview.

25.4.26 TIM1 option register 3 (TIM1_OR3)

Address offset: 0x64

Reset value: 0x0000 0001

31	30	29	28	27	26	25	24	23	22	21	20	19	18	17	16
Res.	Res.	Res.	Res.	Res.	Res.	Res.	Res.	Res.	Res.	Res.	Res.	Res.	Res.	Res.	Res.
15	14	13	12	11	10	9	8	7	6	5	4	3	2	1	0
Res.	Res.	Res.	Res.	BK2CMP2P	BK2CMP1P	BK2INP	Res.	Res.	Res.	Res.	Res.	Res.	BK2CMP2E	BK2CMP1E	BK2INE
				rw	rw	rw							rw	rw	rw

Bits 31:12 Reserved, must be kept at reset value

Bit 11 **BK2CMP2P**: BRK2 COMP2 input polarity

This bit selects the COMP2 input sensitivity. It must be programmed together with the BKP2 polarity bit.

0: COMP2 input is active low

1: COMP2 input is active high

Note: This bit can not be modified as long as LOCK level 1 has been programmed (LOCK bits in TIMx_BDTR register).

Bit 10 **BK2CMP1P**: BRK2 COMP1 input polarity

This bit selects the COMP1 input sensitivity. It must be programmed together with the BKP2 polarity bit.

0: COMP1 input is active low

1: COMP1 input is active high

Note: This bit can not be modified as long as LOCK level 1 has been programmed (LOCK bits in TIMx_BDTR register).

Bit 9 **BK2INP**: BRK2 BKIN2 input polarity

This bit selects the BKIN2 alternate function input sensitivity. It must be programmed together with the BKP2 polarity bit.

0: BKIN2 input is active low

1: BKIN2 input is active high

Note: This bit can not be modified as long as LOCK level 1 has been programmed (LOCK bits in TIMx_BDTR register).

Bit 8 Reserved, must be kept at reset value

Bits 7:3 Reserved, must be kept at reset value

Bit 2 **BK2CMP2E**: BRK2 COMP2 enable

This bit enables the COMP2 for the timer's BRK2 input. COMP2 output is 'ORed' with the other BRK2 sources.

0: COMP2 input disabled

1: COMP2 input enabled

Note: This bit can not be modified as long as LOCK level 1 has been programmed (LOCK bits in TIMx_BDTR register).

Bit 1 **BK2CMP1E**: BRK2 COMP1 enable

This bit enables the COMP1 for the timer's BRK2 input. COMP1 output is 'ORed' with the other BRK2 sources.

0: COMP1 input disabled

1: COMP1 input enabled

Note: This bit can not be modified as long as LOCK level 1 has been programmed (LOCK bits in TIMx_BDTR register).

Bit 0 **BK2INE**: BRK2 BKIN input enable

This bit enables the BKIN2 alternate function input for the timer's BRK2 input. BKIN2 input is 'ORed' with the other BRK2 sources.

0: BKIN2 input disabled

1: BKIN2 input enabled

Note: This bit can not be modified as long as LOCK level 1 has been programmed (LOCK bits in TIMx_BDTR register).

Note: Refer to Figure 206: Break and Break2 circuitry overview.

25.4.27 TIM1 register map

TIM1 registers are mapped as 16-bit addressable registers as described in the table below:

Table 113. TIM1 register map and reset values

Offset	Register	31	30	29	28	27	26	25	24	23	22	21	20	19	18	17	16	15	14	13	12	11	10	9	8	7	6	5	4	3	2	1	0
0x00	TIM1_CR1	Res	Res	Res	Res	Res	Res	Res	Res	Res	Res	Res	Res	Res	Res	Res	Res	Res	Res	Res	Res	UIFREMAP	Res	CKD [1:0]		ARPE	CMS [1:0]		DIR	OPM	URS	UDIS	CEN
	Reset value																					0		0	0	0	0	0	0	0	0	0	0
0x04	TIM1_CR2	Res	Res	Res	Res	Res	Res	Res	Res	MMS2[3:0]				Res	OIS6	Res	OIS5	Res	OIS4	OIS3N	OIS3	OIS2N	OIS2	OIS1N	OIS1	TI1S	MMS [2:0]			CCDS	CCUS	Res	CCPC
	Reset value									0	0	0	0		0		0		0	0	0	0	0	0	0	0	0	0	0	0	0		0
0x08	TIM1_SMCR	Res	Res	Res	Res	Res	Res	Res	Res	Res	Res	Res	Res	Res	Res	Res	SMS[3]	ETP	ECE	ETPS [1:0]		ETF[3:0]				MSM	TS[2:0]				SMS[2:0]		
	Reset value																0	0	0	0	0	0	0	0	0	0	0	0	0	0	0	0	0
0x0C	TIM1_DIER	Res	Res	Res	Res	Res	Res	Res	Res	Res	Res	Res	Res	Res	Res	Res	Res	Res	TDE	COMDE	CC4DE	CC3DE	CC2DE	CC1DE	UDE	BIE	TIE	COMIE	CC4IE	CC3IE	CC2IE	CC1IE	UIE
	Reset value																		0	0	0	0	0	0	0	0	0	0	0	0	0	0	0
0x10	TIM1_SR	Res	Res	Res	Res	Res	Res	Res	Res	Res	Res	Res	Res	Res	Res	CC6IF	CC5IF	Res	Res	SBIF	CC4OF	CC3OF	CC2OF	CC1OF	B2IF	BIF	TIF	COMIF	CC4IF	CC3IF	CC2IF	CC1IF	UIF
	Reset value															0	0			0	0	0	0	0	0	0	0	0	0	0	0	0	0
0x14	TIM1_EGR	Res	Res	Res	Res	Res	Res	Res	Res	Res	Res	Res	Res	Res	Res	Res	Res	Res	Res	Res	Res	Res	Res	Res	B2G	BG	TG	COM	CC4G	CC3G	CC2G	CC1G	UG
	Reset value																								0	0	0	0	0	0	0	0	0
0x18	TIM1_CCMR1 Output Compare mode	Res	Res	Res	Res	Res	Res	Res	OC2M[3]	Res	Res	Res	Res	Res	Res	Res	OC1M[3]	OC2CE	OC2M [2:0]			OC2PE	OC2FE	CC2S [1:0]		OC1CE	OC1M [2:0]			OC1PE	OC1FE	CC1S [1:0]	
	Reset value								0								0	0	0	0	0	0	0	0	0	0	0	0	0	0	0	0	0
	TIM1_CCMR1 Input Capture mode	Res	Res	Res	Res	Res	Res	Res	Res	Res	Res	Res	Res	Res	Res	Res	Res	IC2F[3:0]				IC2PSC [1:0]		CC2S [1:0]		IC1F[3:0]				IC1PSC [1:0]		CC1S [1:0]	
	Reset value																	0	0	0	0	0	0	0	0	0	0	0	0	0	0	0	0
0x1C	TIM1_CCMR2 Output Compare mode	Res	Res	Res	Res	Res	Res	Res	OC4M[3]	Res	Res	Res	Res	Res	Res	Res	OC3M[3]	OC4CE	OC4M [2:0]			OC4PE	OC4FE	CC4S [1:0]		OC3CE	OC3M [2:0]			OC3PE	OC3FE	CC3S [1:0]	
	Reset value								0								0	0	0	0	0	0	0	0	0	0	0	0	0	0	0	0	0
	TIM1_CCMR2 Input Capture mode	Res	Res	Res	Res	Res	Res	Res	Res	Res	Res	Res	Res	Res	Res	Res	Res	IC4F[3:0]				IC4PSC [1:0]		CC4S [1:0]		IC3F[3:0]				IC3PSC [1:0]		CC3S [1:0]	
	Reset value																	0	0	0	0	0	0	0	0	0	0	0	0	0	0	0	0
0x20	TIM1_CCER	Res	Res	Res	Res	Res	Res	Res	Res	Res	Res	CC6P	CC6E	Res	Res	CC5P	CC5E	Res	Res	CC4P	CC4E	CC3NP	CC3NE	CC3P	CC3E	CC2NP	CC2NE	CC2P	CC2E	CC1NP	CC1NE	CC1P	CC1E
	Reset value											0	0			0	0			0	0	0	0	0	0	0	0	0	0	0	0	0	0
0x24	TIM1_CNT	UIFCPY	Res	Res	Res	Res	Res	Res	Res	Res	Res	Res	Res	Res	Res	Res	Res	CNT[15:0]															
	Reset value	0																0	0	0	0	0	0	0	0	0	0	0	0	0	0	0	0

Table 113. TIM1 register map and reset values (continued)

Offset	Register	31	30	29	28	27	26	25	24	23	22	21	20	19	18	17	16	15	14	13	12	11	10	9	8	7	6	5	4	3	2	1	0
0x28	**TIM1_PSC**	Res	Res	Res	Res	Res	Res	Res	Res	Res	Res	Res	Res	Res	Res	Res	Res	PSC[15:0]															
	Reset value																	0	0	0	0	0	0	0	0	0	0	0	0	0	0	0	0
0x2C	**TIM1_ARR**	Res	Res	Res	Res	Res	Res	Res	Res	Res	Res	Res	Res	Res	Res	Res	Res	ARR[15:0]															
	Reset value																	1	1	1	1	1	1	1	1	1	1	1	1	1	1	1	1
0x30	**TIM1_RCR**	Res	Res	Res	Res	Res	Res	Res	Res	Res	Res	Res	Res	Res	Res	Res	Res	REP[15:0]															
	Reset value																	0	0	0	0	0	0	0	0	0	0	0	0	0	0	0	0
0x34	**TIM1_CCR1**	Res	Res	Res	Res	Res	Res	Res	Res	Res	Res	Res	Res	Res	Res	Res	Res	CCR1[15:0]															
	Reset value																	0	0	0	0	0	0	0	0	0	0	0	0	0	0	0	0
0x38	**TIM1_CCR2**	Res	Res	Res	Res	Res	Res	Res	Res	Res	Res	Res	Res	Res	Res	Res	Res	CCR2[15:0]															
	Reset value																	0	0	0	0	0	0	0	0	0	0	0	0	0	0	0	0
0x3C	**TIM1_CCR3**	Res	Res	Res	Res	Res	Res	Res	Res	Res	Res	Res	Res	Res	Res	Res	Res	CCR3[15:0]															
	Reset value																	0	0	0	0	0	0	0	0	0	0	0	0	0	0	0	0
0x40	**TIM1_CCR4**	Res	Res	Res	Res	Res	Res	Res	Res	Res	Res	Res	Res	Res	Res	Res	Res	CCR4[15:0]															
	Reset value																	0	0	0	0	0	0	0	0	0	0	0	0	0	0	0	0
0x44	**TIM1_BDTR**	Res	Res	Res	Res	Res	Res	BK2P	BK2E	BK2F[3:0]				BKF[3:0]				MOE	AOE	BKP	BKE	OSSR	OSSI	LOCK [1:0]		DT[7:0]							
	Reset value							0	0	0	0	0	0	0	0	0	0	0	0	0	0	0	0	0	0	0	0	0	0	0	0	0	0
0x48	**TIM1_DCR**	Res	Res	Res	Res	Res	Res	Res	Res	Res	Res	Res	Res	Res	Res	Res	Res	Res	Res	Res	DBL[4:0]					Res	Res	Res	DBA[4:0]				
	Reset value																				0	0	0	0	0				0	0	0	0	0
0x4C	**TIM1_DMAR**	Res	Res	Res	Res	Res	Res	Res	Res	Res	Res	Res	Res	Res	Res	Res	Res	DMAB[15:0]															
	Reset value																	0	0	0	0	0	0	0	0	0	0	0	0	0	0	0	0
0x50	**TIM1_OR1**	Res	Res	Res	Res	Res	Res	Res	Res	Res	Res	Res	Res	Res	Res	Res	Res	Res	Res	Res	Res	Res	Res	Res	Res	Res	Res	Res	TI1_RMP	Res	Res	ETR_ADC1_RMP	
	Reset value																												0			0	0
0x54	**TIM1_CCMR3** Output Compare mode	Res	Res	Res	Res	Res	Res	Res	OC6M[3]	Res	Res	Res	Res	Res	Res	Res	OC5M[3]	OC6CE	OC6M [2:0]			OC6PE	OC6FE	Res	Res	OC5CE	OC5M [2:0]			OC5PE	OC5FE	Res	Res
	Reset value								0								0	0	0	0	0	0	0			0	0	0	0	0	0		
0x58	**TIM1_CCR5**	GC5C3	GC5C2	GC5C1	Res	Res	Res	Res	Res	Res	Res	Res	Res	Res	Res	Res	Res	CCR5[15:0]															
	Reset value	0	0	0														0	0	0	0	0	0	0	0	0	0	0	0	0	0	0	0

Table 113. TIM1 register map and reset values (continued)

Offset	Register	31	30	29	28	27	26	25	24	23	22	21	20	19	18	17	16	15	14	13	12	11	10	9	8	7	6	5	4	3	2	1	0
0x5C	**TIM1_CCR6**	Res	Res	Res	Res	Res	Res	Res	Res	Res	Res	Res	Res	Res	Res	Res	Res	CCR6[15:0]															
	Reset value																	0	0	0	0	0	0	0	0	0	0	0	0	0	0	0	0
0x60	**TIM1_OR2**	Res	Res	Res	Res	Res	Res	Res	Res	Res	Res	Res	Res	Res	Res	Res	ETRSEL [2:0]			Res	Res	BKCMP2P	BKCMP1P	BKINP	Res	Res	Res	Res	Res	Res	BKCMP2E	BKCMP1E	BKINE
	Reset value																0	0	0			0	0	0							0	0	1
0x64	**TIM1_OR3**	Res	Res	Res	Res	Res	Res	Res	Res	Res	Res	Res	Res	Res	Res	Res	Res	Res	Res	Res	Res	BK2CMP2P	BK2CMP1P	BK2INP	Res	Res	Res	Res	Res	Res	BK2CMP2E	BK2CMP1E	BK2INE
	Reset value																					0	0	0							0	0	1

Refer to *Section 2.2.2 on page 62* for the register boundary addresses.

26 General-purpose timer (TIM2)

26.1 TIM2 introduction

General-purpose timer TIM2 consists of a 32-bit auto-reload counter driven by a programmable prescaler.

The timer may be used for a variety of purposes, including measuring the pulse lengths of input signals (*input capture*) or generating output waveforms (*output compare and PWM*).

Pulse lengths and waveform periods can be modulated from a few microseconds to several milliseconds using the timer prescaler and the RCC clock controller prescalers.

26.2 TIM2 main features

- 32-bit (TIM2) up, down, up/down auto-reload counter.
- 16-bit programmable prescaler used to divide (also “on the fly”) the counter clock frequency by any factor between 1 and 65535.
- Up to 4 independent channels for:
  - Input capture
  - Output compare
  - PWM generation (Edge- and Center-aligned modes)
  - One-pulse mode output
- Synchronization circuit to control the timer with external signals and to interconnect several timers.
- Interrupt/DMA generation on the following events:
  - Update: counter overflow/underflow, counter initialization (by software or internal/external trigger)
  - Trigger event (counter start, stop, initialization or count by internal/external trigger)
  - Input capture
  - Output compare
- Supports incremental (quadrature) encoder and hall-sensor circuitry for positioning purposes
- Trigger input for external clock or cycle-by-cycle current management

Figure 223. General-purpose timer block diagram

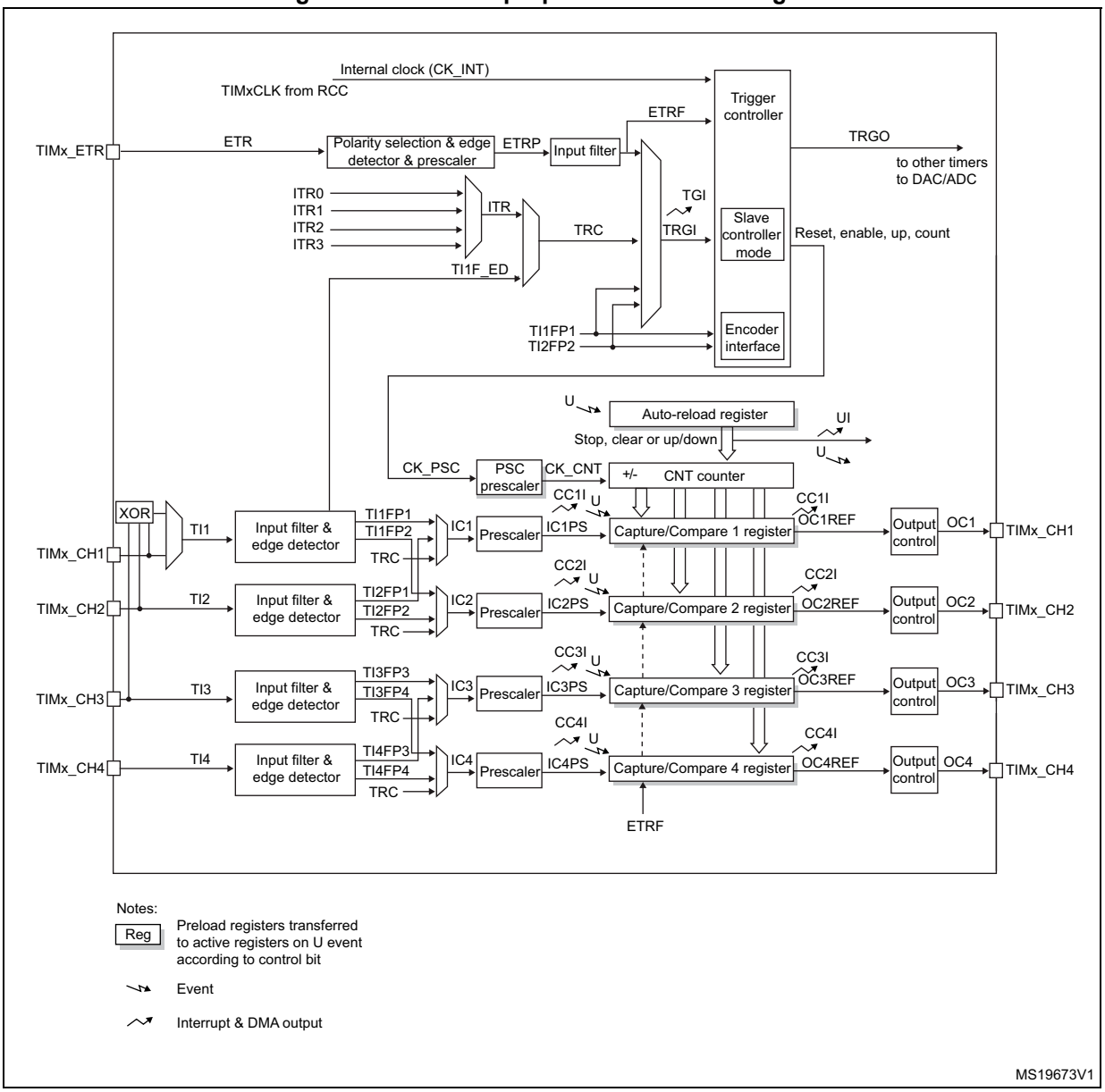

26.3 TIM2 functional description

26.3.1 Time-base unit

The main block of the programmable timer is a 16-bit/32-bit counter with its related auto-reload register. The counter can count up, down or both up and down but also down or both up and down. The counter clock can be divided by a prescaler.

The counter, the auto-reload register and the prescaler register can be written or read by software. This is true even when the counter is running.

The time-base unit includes:

- Counter Register (TIMx_CNT)
- Prescaler Register (TIMx_PSC):
- Auto-Reload Register (TIMx_ARR)

The auto-reload register is preloaded. Writing to or reading from the auto-reload register accesses the preload register. The content of the preload register are transferred into the shadow register permanently or at each update event (UEV), depending on the auto-reload preload enable bit (ARPE) in TIMx_CR1 register. The update event is sent when the counter reaches the overflow (or underflow when downcounting) and if the UDIS bit equals 0 in the TIMx_CR1 register. It can also be generated by software. The generation of the update event is described in detail for each configuration.

The counter is clocked by the prescaler output CK_CNT, which is enabled only when the counter enable bit (CEN) in TIMx_CR1 register is set (refer also to the slave mode controller description to get more details on counter enabling).

Note that the actual counter enable signal CNT_EN is set 1 clock cycle after CEN.

Prescaler description

The prescaler can divide the counter clock frequency by any factor between 1 and 65536. It is based on a 16-bit counter controlled through a 16-bit/32-bit register (in the TIMx_PSC register). It can be changed on the fly as this control register is buffered. The new prescaler ratio is taken into account at the next update event.

Figure 224 and *Figure 225* give some examples of the counter behavior when the prescaler ratio is changed on the fly:

Figure 224. Counter timing diagram with prescaler division change from 1 to 2

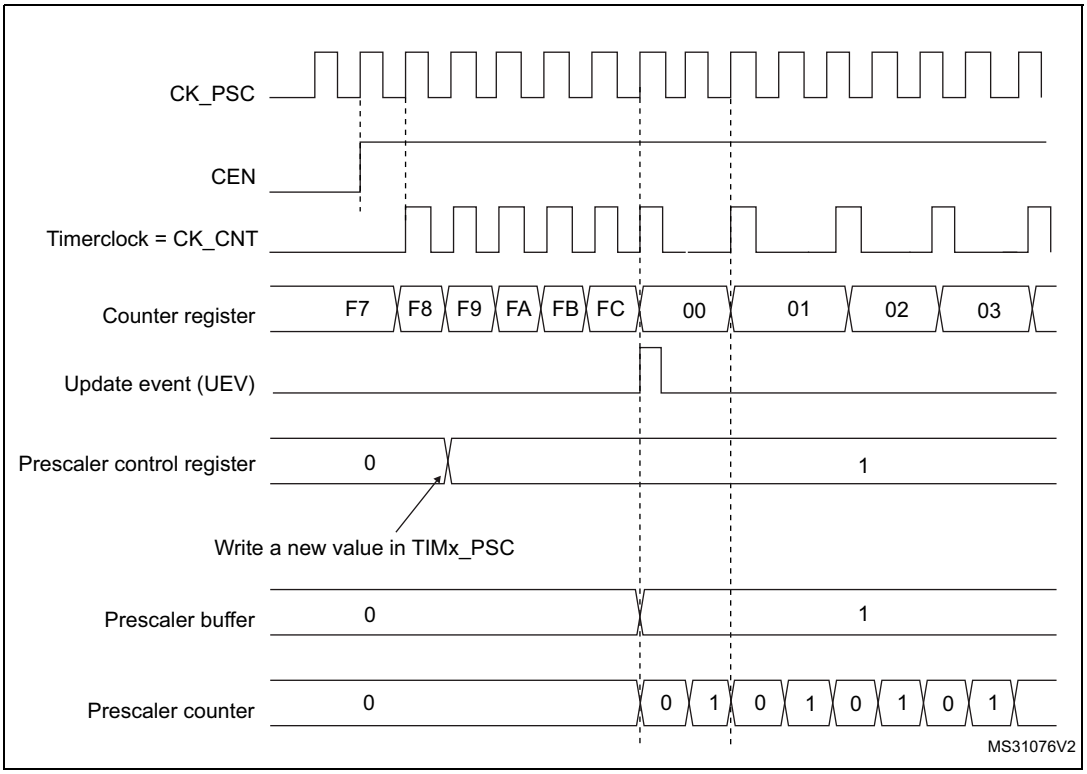

Figure 225. Counter timing diagram with prescaler division change from 1 to 4

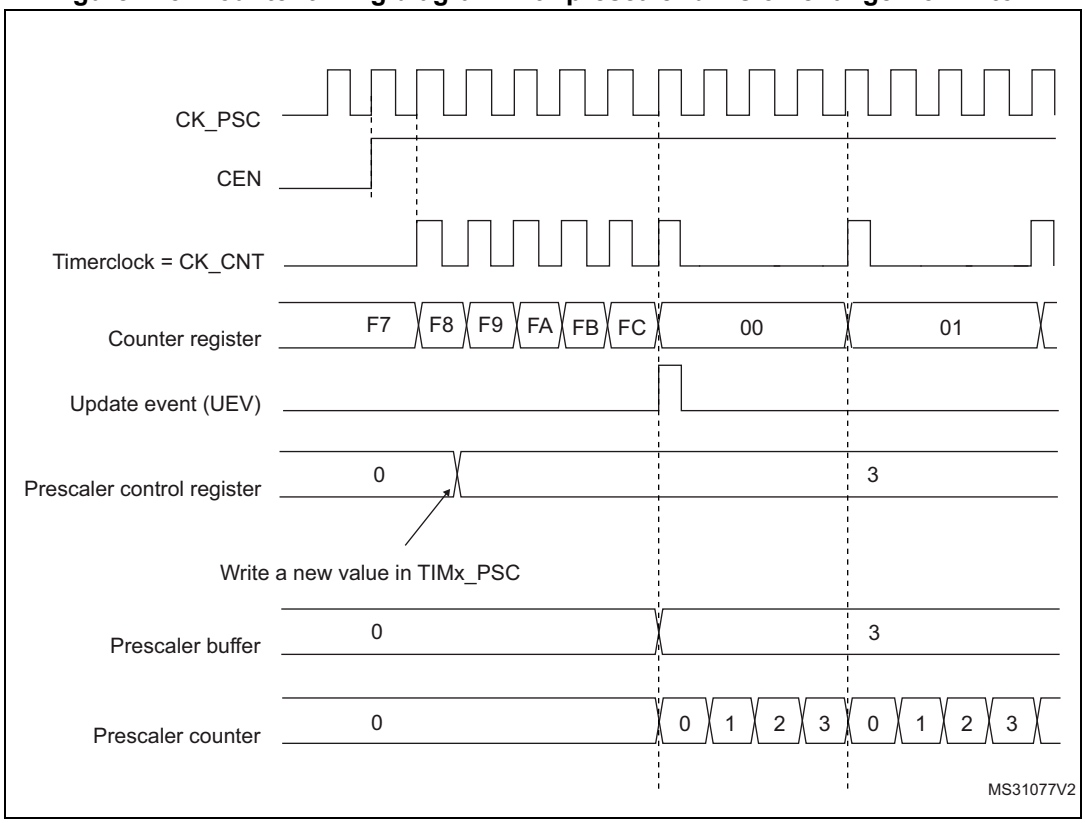

26.3.2 Counter modes

Upcounting mode

In upcounting mode, the counter counts from 0 to the auto-reload value (content of the TIMx_ARR register), then restarts from 0 and generates a counter overflow event.

An Update event can be generated at each counter overflow or by setting the UG bit in the TIMx_EGR register (by software or by using the slave mode controller).

The UEV event can be disabled by software by setting the UDIS bit in TIMx_CR1 register. This is to avoid updating the shadow registers while writing new values in the preload registers. Then no update event occurs until the UDIS bit has been written to 0. However, the counter restarts from 0, as well as the counter of the prescaler (but the prescale rate does not change). In addition, if the URS bit (update request selection) in TIMx_CR1 register is set, setting the UG bit generates an update event UEV but without setting the UIF flag (thus no interrupt or DMA request is sent). This is to avoid generating both update and capture interrupts when clearing the counter on the capture event.

When an update event occurs, all the registers are updated and the update flag (UIF bit in TIMx_SR register) is set (depending on the URS bit):

- The buffer of the prescaler is reloaded with the preload value (content of the TIMx_PSC register)
- The auto-reload shadow register is updated with the preload value (TIMx_ARR)

The following figures show some examples of the counter behavior for different clock frequencies when TIMx_ARR=0x36.

Figure 226. Counter timing diagram, internal clock divided by 1

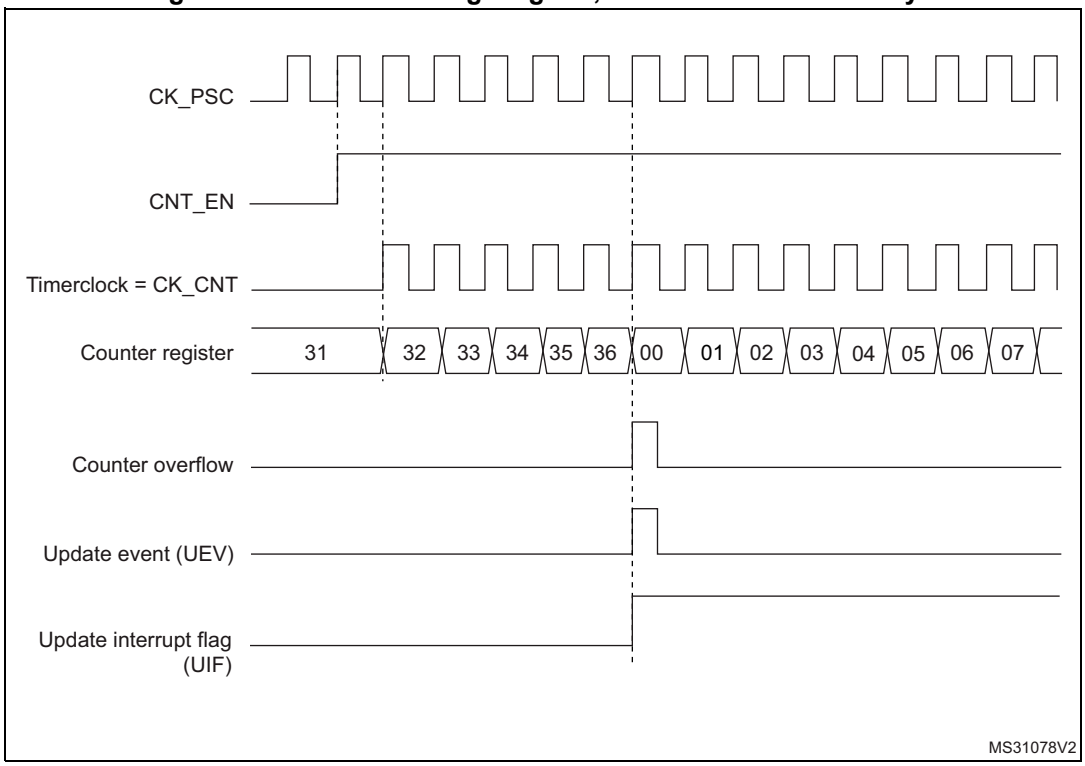

Figure 227. Counter timing diagram, internal clock divided by 2

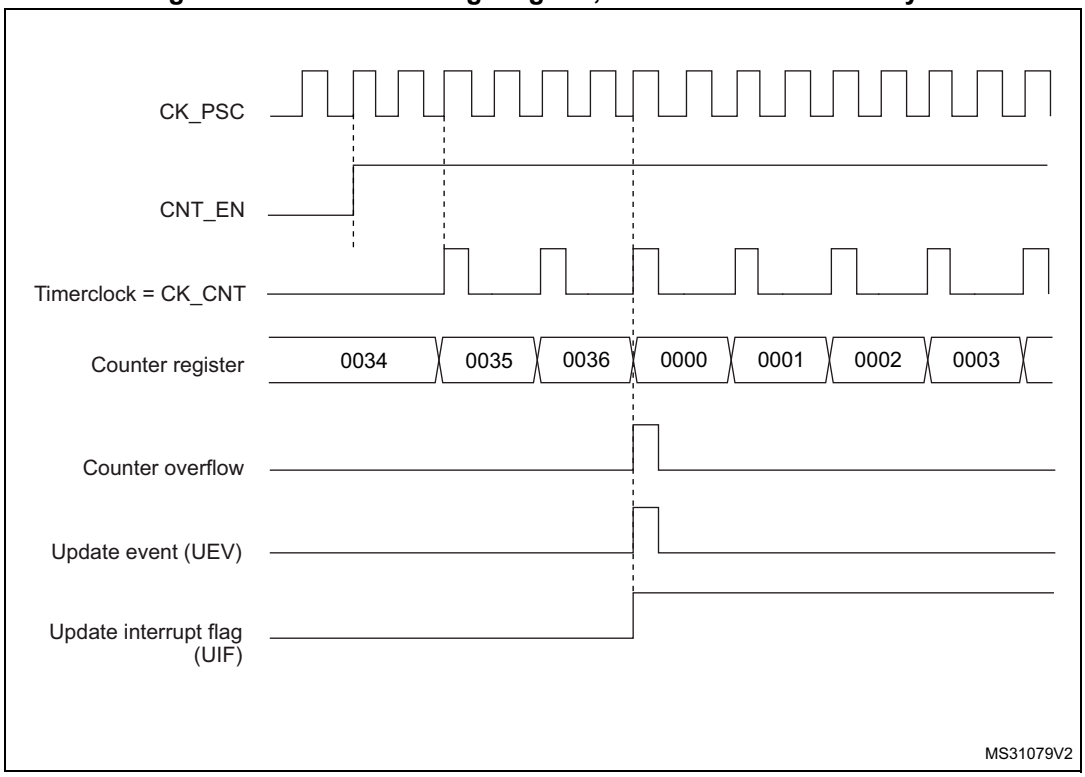

Figure 228. Counter timing diagram, internal clock divided by 4

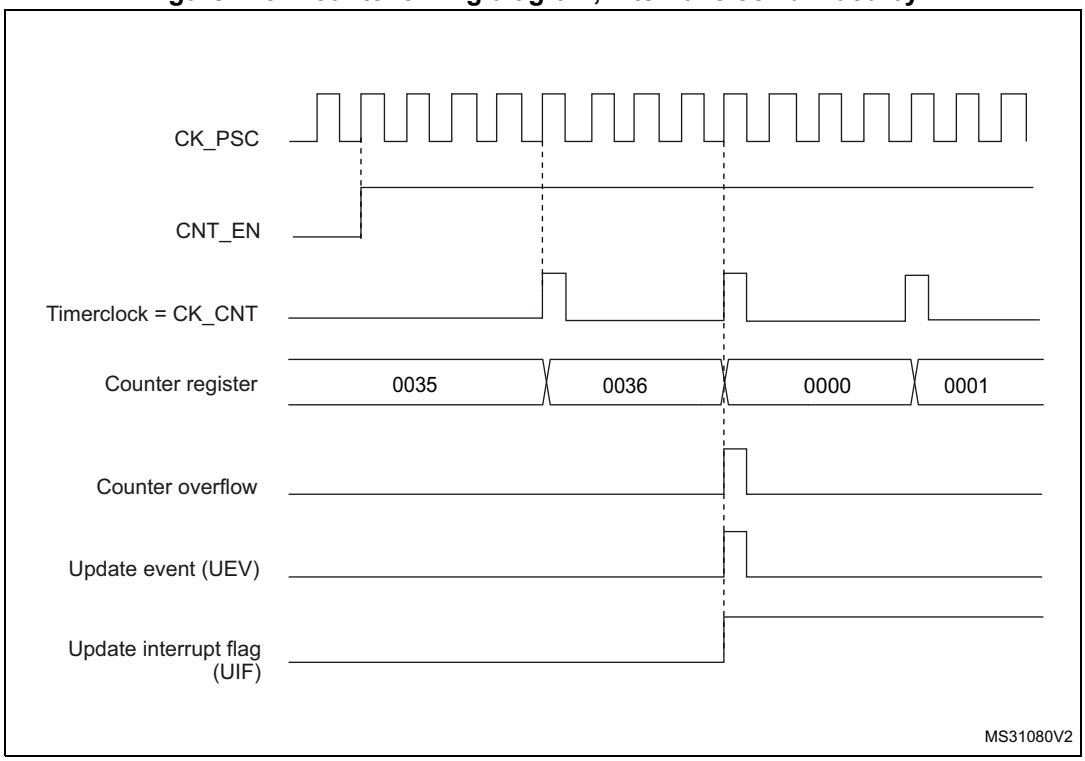

Figure 229. Counter timing diagram, internal clock divided by N

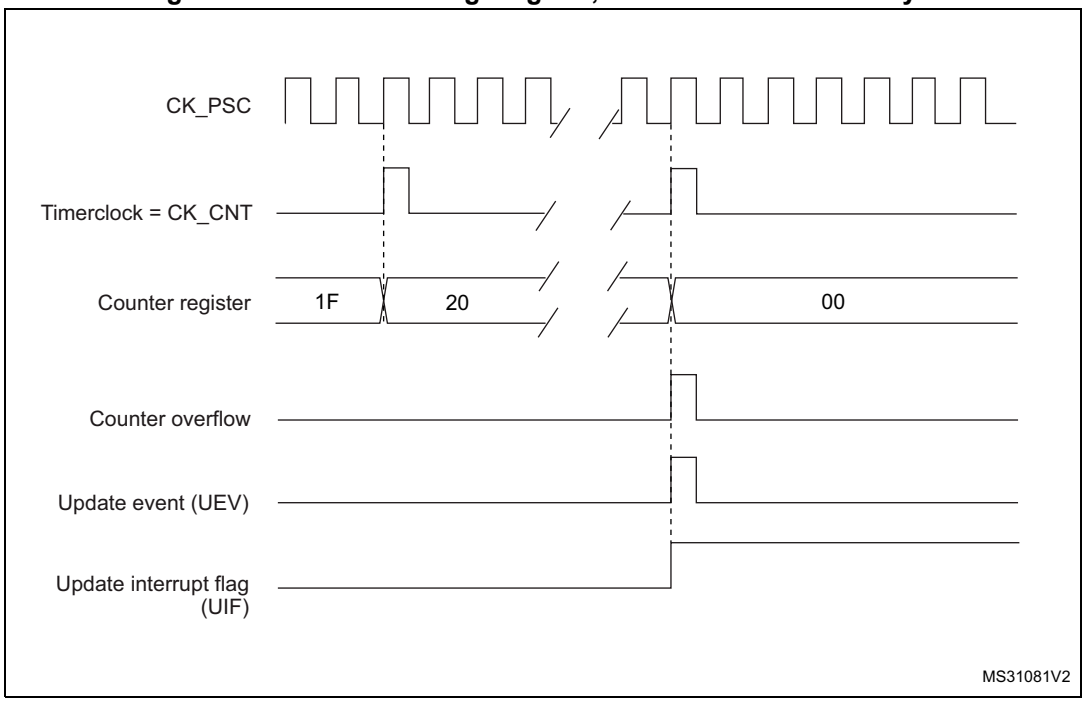

Figure 230. Counter timing diagram, Update event when ARPE=0 (TIMx_ARR not preloaded)

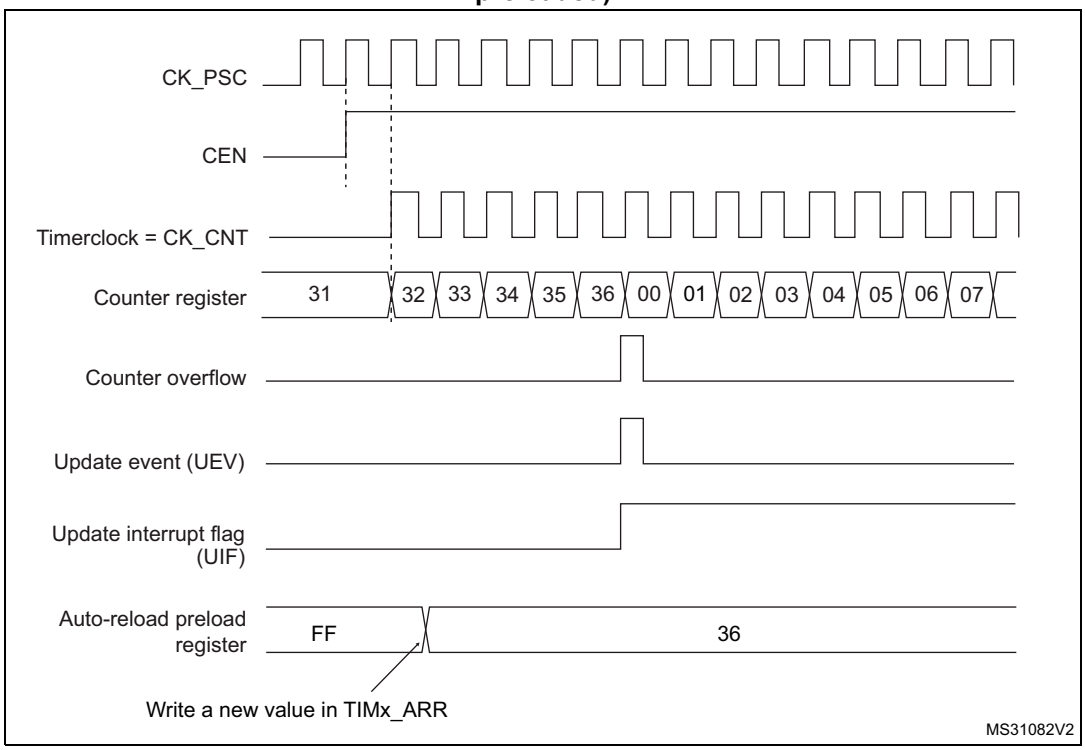

Figure 231. Counter timing diagram, Update event when ARPE=1 (TIMx_ARR preloaded)

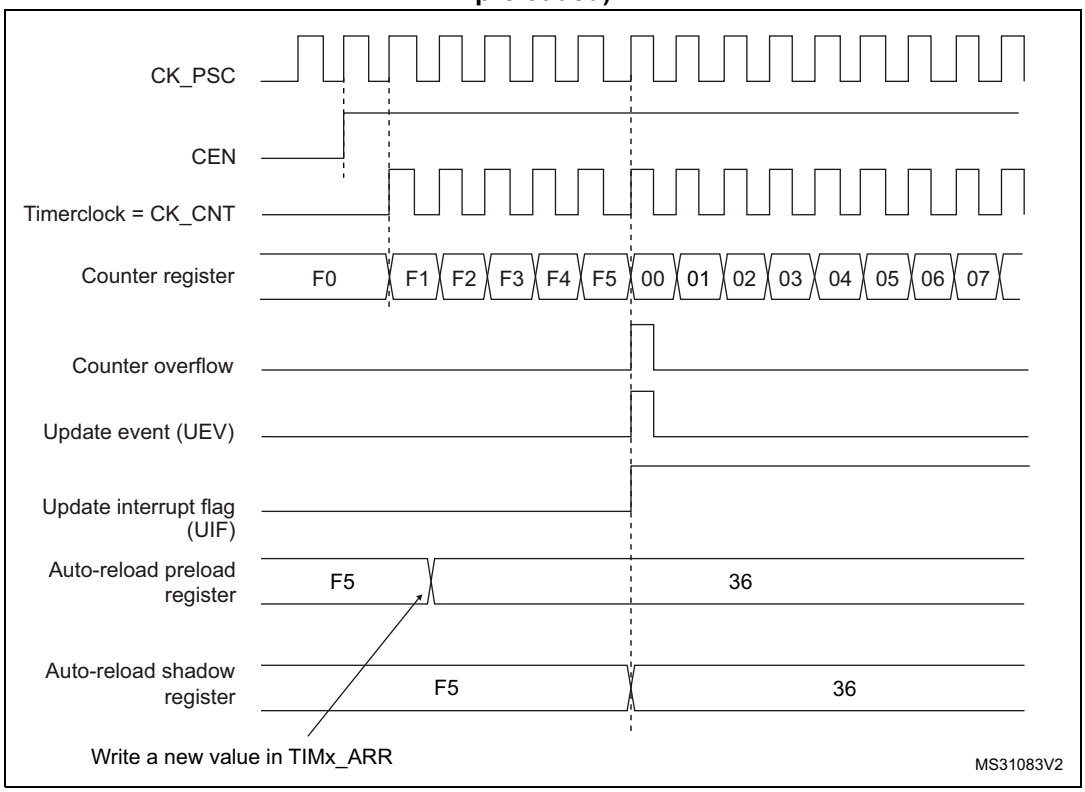

Downcounting mode

In downcounting mode, the counter counts from the auto-reload value (content of the TIMx_ARR register) down to 0, then restarts from the auto-reload value and generates a counter underflow event.

An Update event can be generate at each counter underflow or by setting the UG bit in the TIMx_EGR register (by software or by using the slave mode controller)

The UEV update event can be disabled by software by setting the UDIS bit in TIMx_CR1 register. This is to avoid updating the shadow registers while writing new values in the preload registers. Then no update event occurs until UDIS bit has been written to 0. However, the counter restarts from the current auto-reload value, whereas the counter of the prescaler restarts from 0 (but the prescale rate doesn't change).

In addition, if the URS bit (update request selection) in TIMx_CR1 register is set, setting the UG bit generates an update event UEV but without setting the UIF flag (thus no interrupt or DMA request is sent). This is to avoid generating both update and capture interrupts when clearing the counter on the capture event.

When an update event occurs, all the registers are updated and the update flag (UIF bit in TIMx_SR register) is set (depending on the URS bit):

- The buffer of the prescaler is reloaded with the preload value (content of the TIMx_PSC register).
- The auto-reload active register is updated with the preload value (content of the TIMx_ARR register). Note that the auto-reload is updated before the counter is reloaded, so that the next period is the expected one.

The following figures show some examples of the counter behavior for different clock frequencies when TIMx_ARR=0x36.

Figure 232. Counter timing diagram, internal clock divided by 1

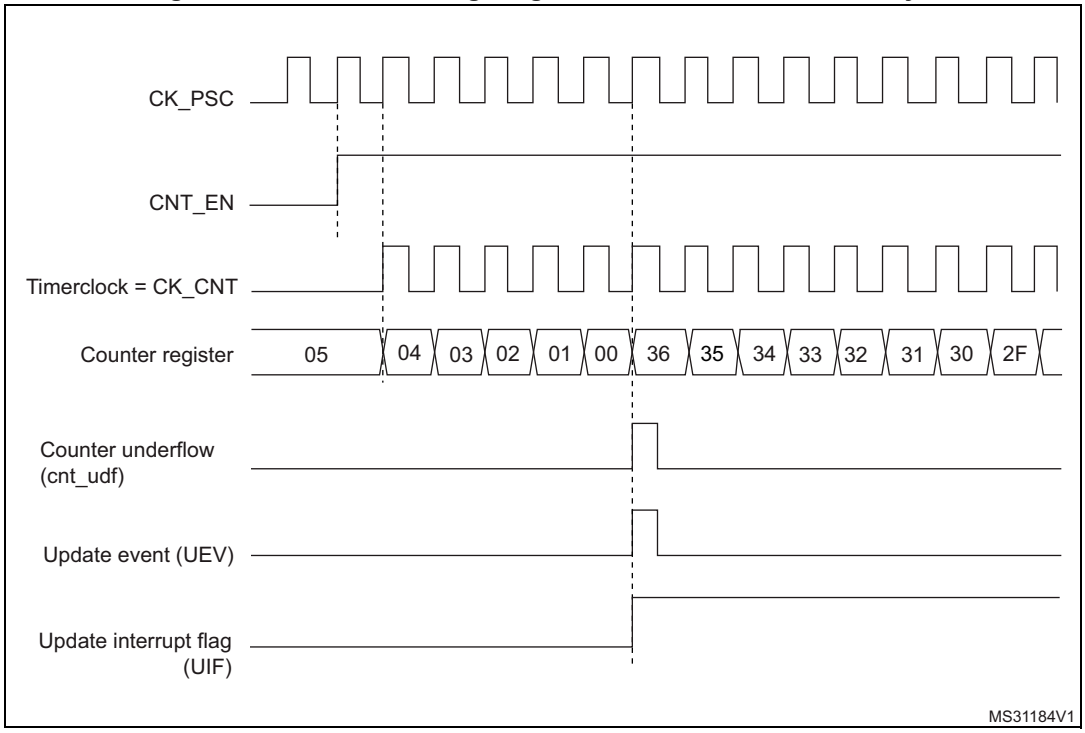

Figure 233. Counter timing diagram, internal clock divided by 2

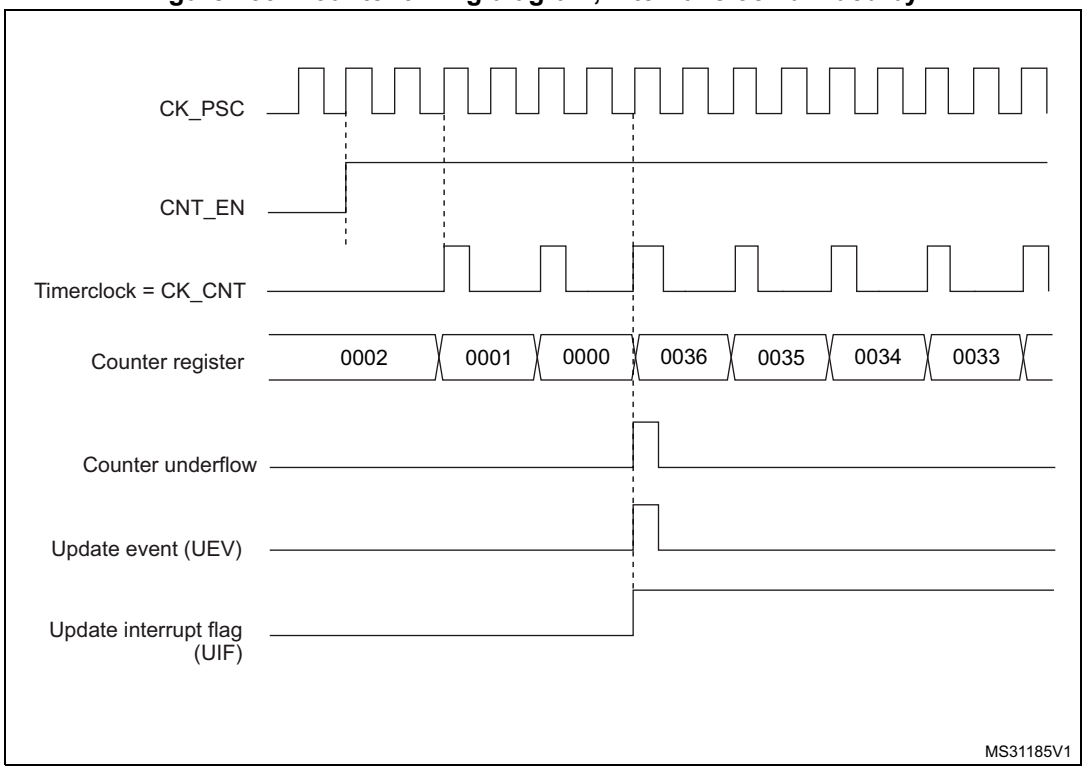

Figure 234. Counter timing diagram, internal clock divided by 4

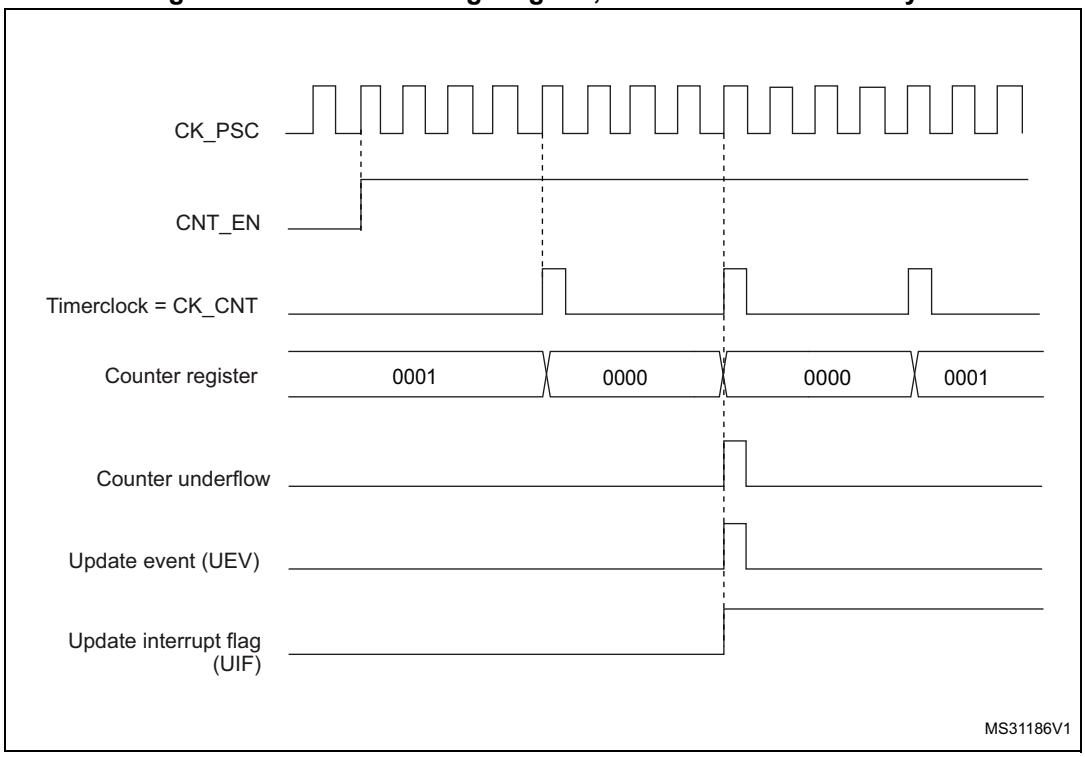

Figure 235. Counter timing diagram, internal clock divided by N

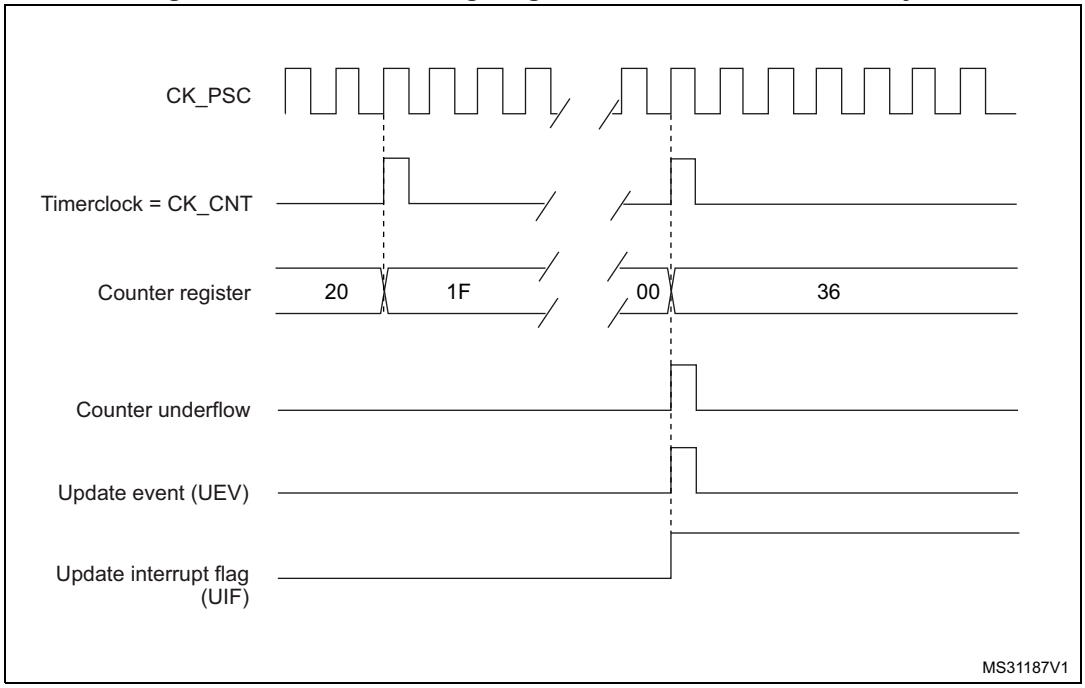

Figure 236. Counter timing diagram, Update event when repetition counter is not used

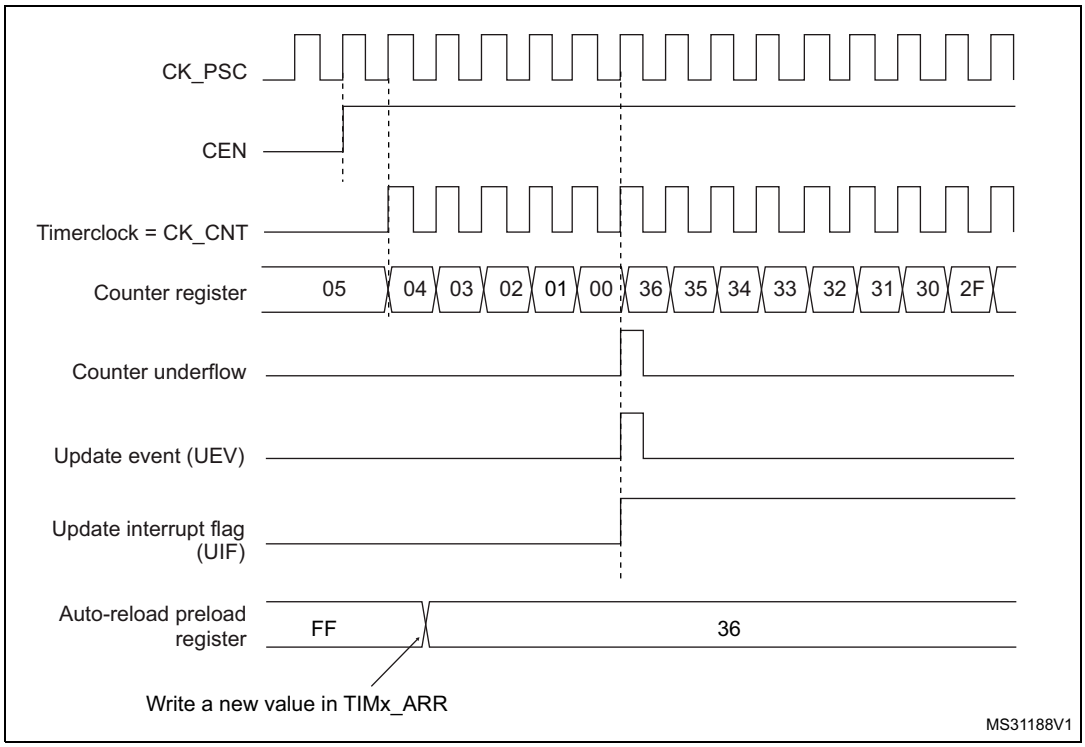

Center-aligned mode (up/down counting)

In center-aligned mode, the counter counts from 0 to the auto-reload value (content of the TIMx_ARR register) – 1, generates a counter overflow event, then counts from the auto-reload value down to 1 and generates a counter underflow event. Then it restarts counting from 0.

Center-aligned mode is active when the CMS bits in TIMx_CR1 register are not equal to '00'. The Output compare interrupt flag of channels configured in output is set when: the counter counts down (Center aligned mode 1, CMS = "01"), the counter counts up (Center aligned mode 2, CMS = "10") the counter counts up and down (Center aligned mode 3, CMS = "11").

In this mode, the direction bit (DIR from TIMx_CR1 register) cannot be written. It is updated by hardware and gives the current direction of the counter.

The update event can be generated at each counter overflow and at each counter underflow or by setting the UG bit in the TIMx_EGR register (by software or by using the slave mode controller) also generates an update event. In this case, the counter restarts counting from 0, as well as the counter of the prescaler.

The UEV update event can be disabled by software by setting the UDIS bit in TIMx_CR1 register. This is to avoid updating the shadow registers while writing new values in the preload registers. Then no update event occurs until the UDIS bit has been written to 0. However, the counter continues counting up and down, based on the current auto-reload value.

In addition, if the URS bit (update request selection) in TIMx_CR1 register is set, setting the UG bit generates an update event UEV but without setting the UIF flag (thus no interrupt or

DMA request is sent). This is to avoid generating both update and capture interrupt when clearing the counter on the capture event.

When an update event occurs, all the registers are updated and the update flag (UIF bit in TIMx_SR register) is set (depending on the URS bit):

- The buffer of the prescaler is reloaded with the preload value (content of the TIMx_PSC register).
- The auto-reload active register is updated with the preload value (content of the TIMx_ARR register). Note that if the update source is a counter overflow, the auto-reload is updated before the counter is reloaded, so that the next period is the expected one (the counter is loaded with the new value).

The following figures show some examples of the counter behavior for different clock frequencies.

Figure 237. Counter timing diagram, internal clock divided by 1, TIMx_ARR=0x6

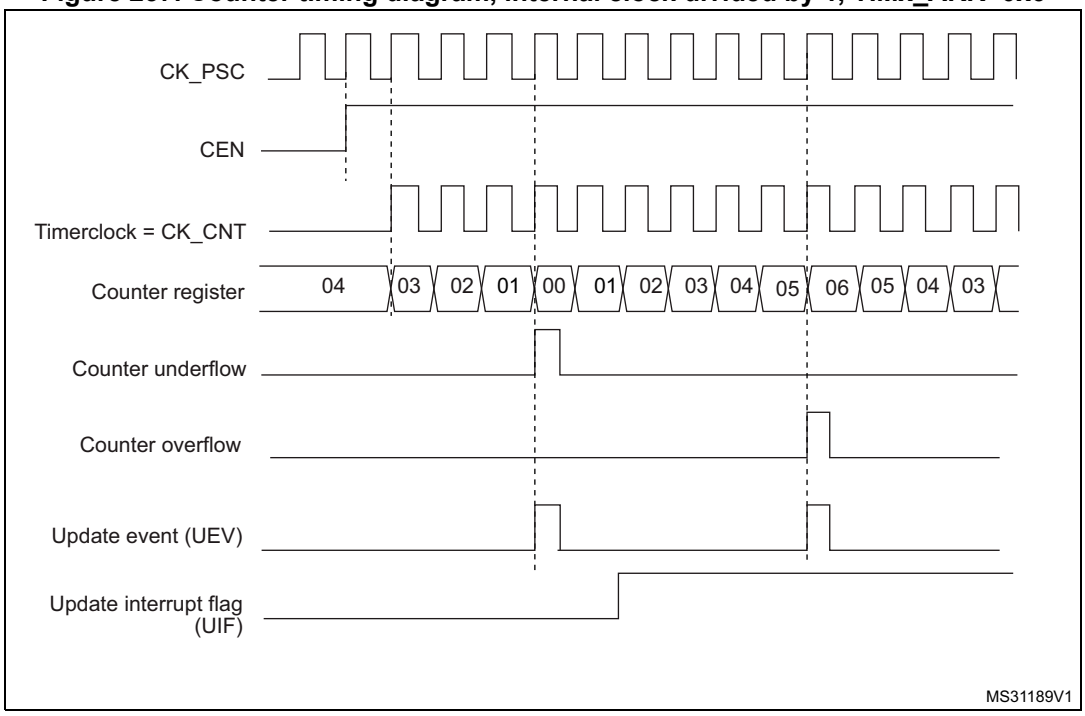

1. Here, center-aligned mode 1 is used (for more details refer to *Section 26.4.1: TIMx control register 1 (TIMx_CR1) on page 761*).

Figure 238. Counter timing diagram, internal clock divided by 2

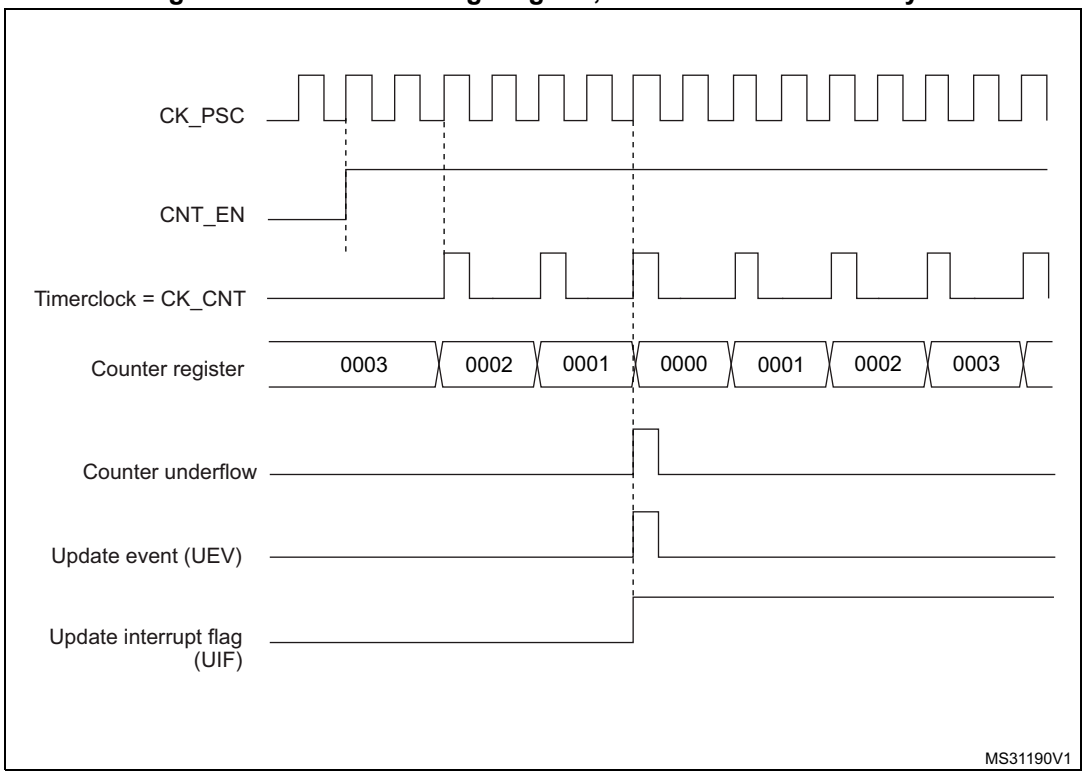

Figure 239. Counter timing diagram, internal clock divided by 4, TIMx_ARR=0x36

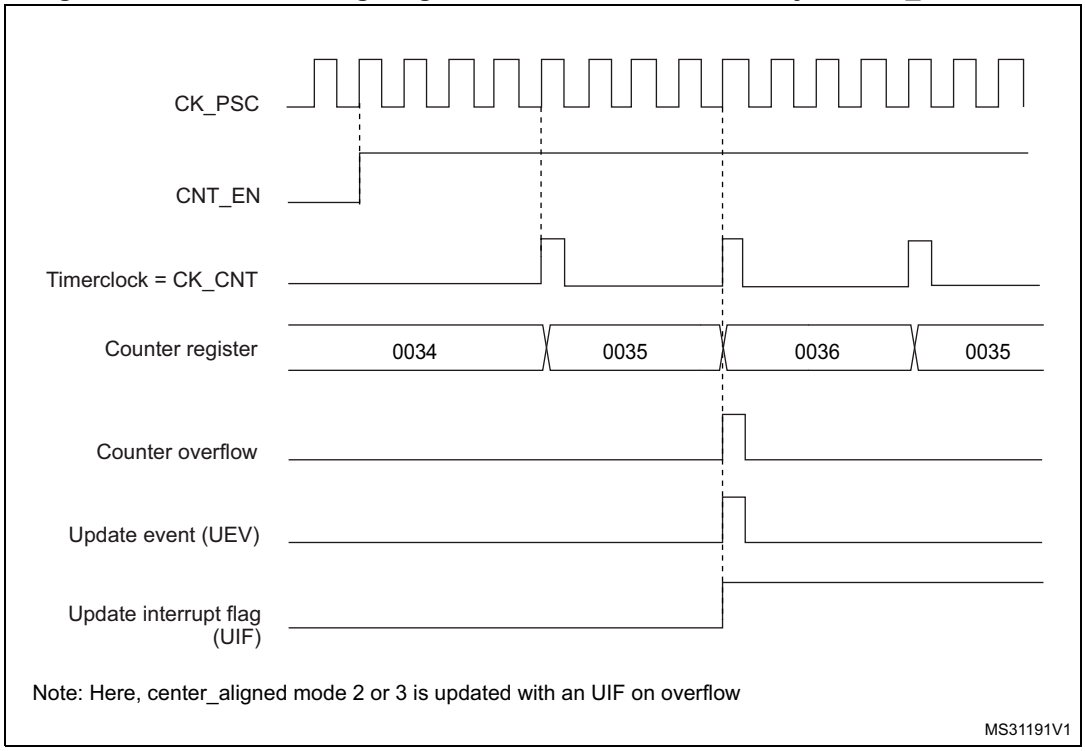

1. Center-aligned mode 2 or 3 is used with an UIF on overflow.

Figure 240. Counter timing diagram, internal clock divided by N

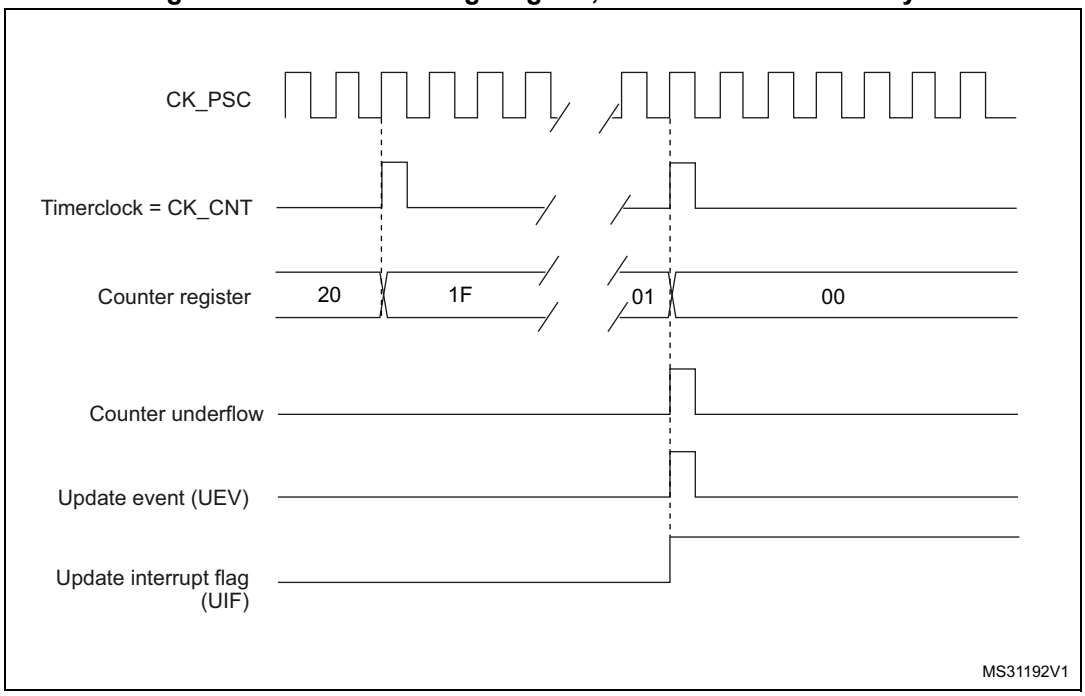

Figure 241. Counter timing diagram, Update event with ARPE=1 (counter underflow)

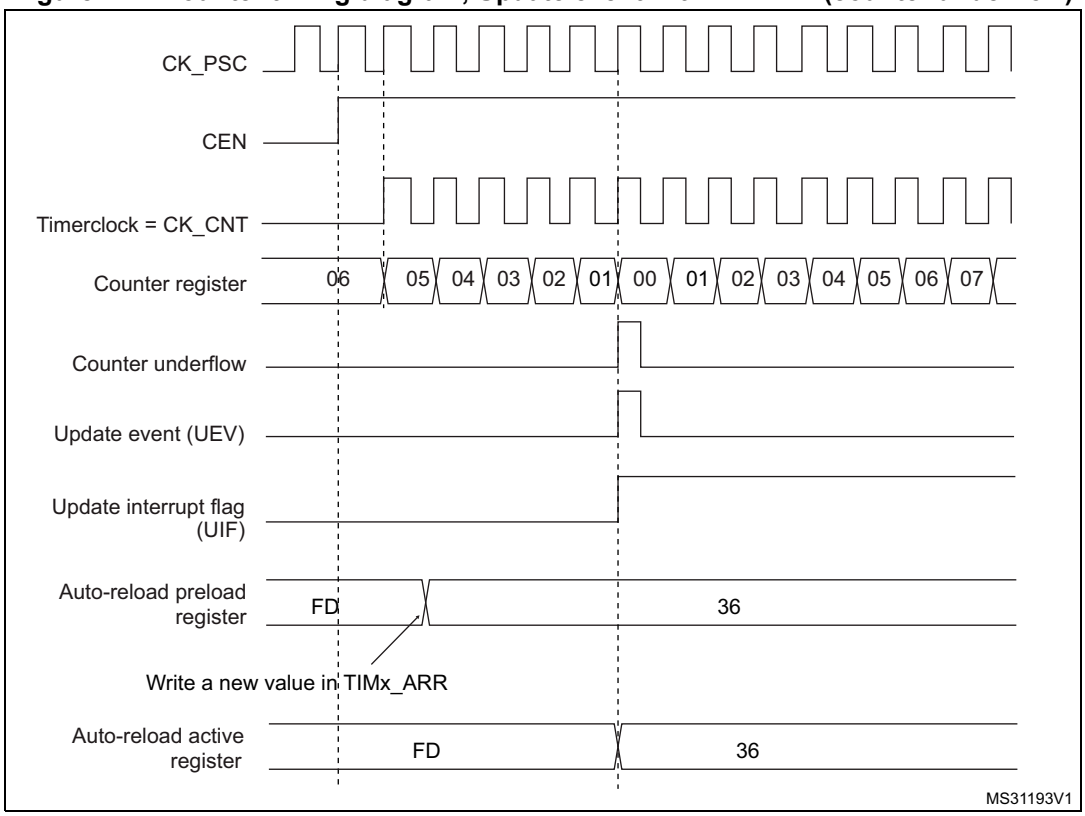

Figure 242. Counter timing diagram, Update event with ARPE=1 (counter overflow)

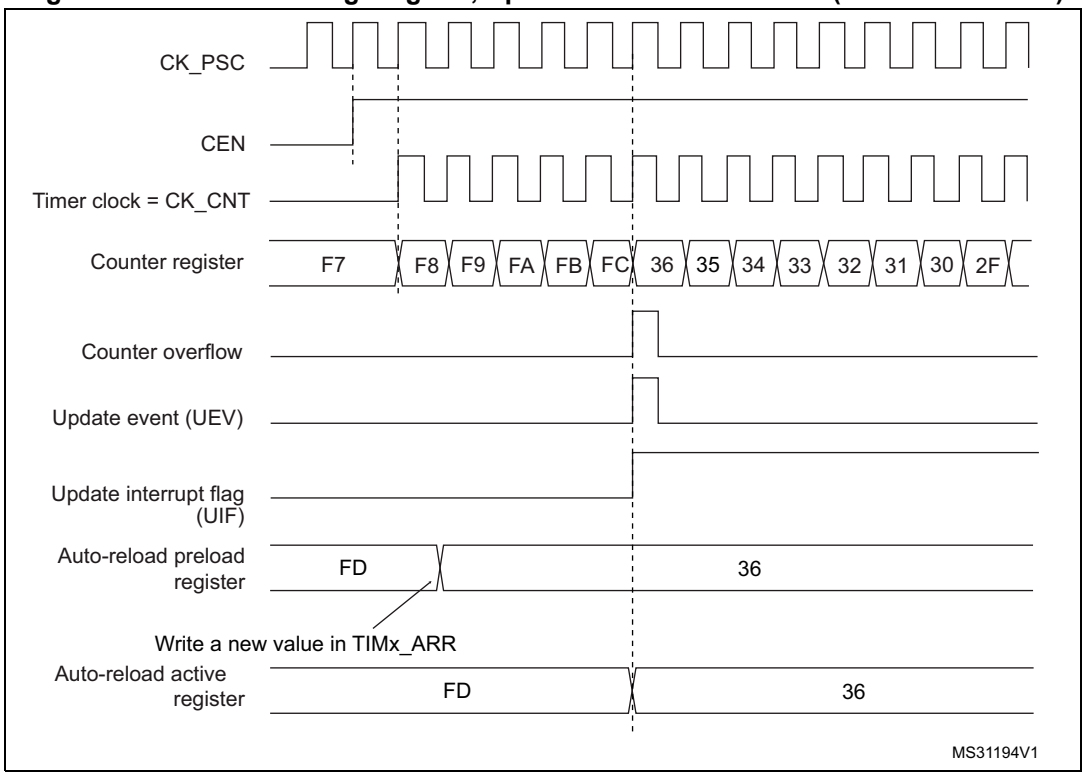

26.3.3 Clock selection

The counter clock can be provided by the following clock sources:

- Internal clock (CK_INT)
- External clock mode1: external input pin (TIx)
- External clock mode2: external trigger input (ETR)
- Internal trigger inputs (ITRx): using one timer as prescaler for another timer, for example, you can configure Timer 13 to act as a prescaler for Timer 2. Refer to *: Using one timer as prescaler for another timer on page 756* for more details.

Internal clock source (CK_INT)

If the slave mode controller is disabled (SMS=000 in the TIMx_SMCR register), then the CEN, DIR (in the TIMx_CR1 register) and UG bits (in the TIMx_EGR register) are actual control bits and can be changed only by software (except UG which remains cleared automatically). As soon as the CEN bit is written to 1, the prescaler is clocked by the internal clock CK_INT.

Figure 243 shows the behavior of the control circuit and the upcounter in normal mode, without prescaler.

Figure 243. Control circuit in normal mode, internal clock divided by 1

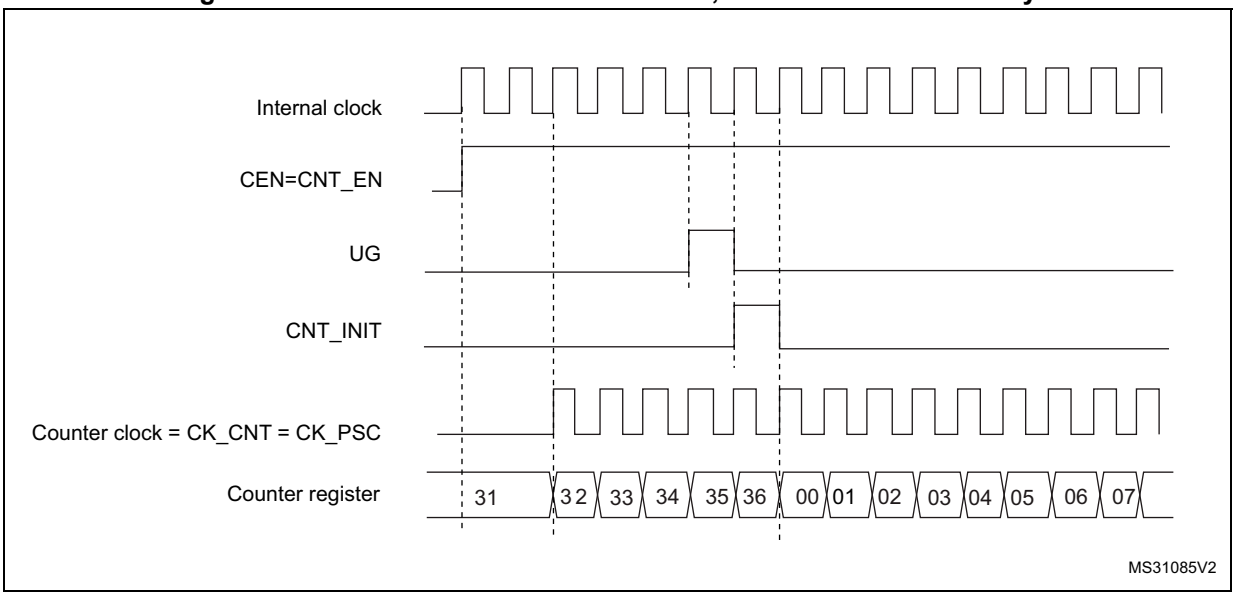

External clock source mode 1

This mode is selected when SMS=111 in the TIMx_SMCR register. The counter can count at each rising or falling edge on a selected input.

Figure 244. TI2 external clock connection example

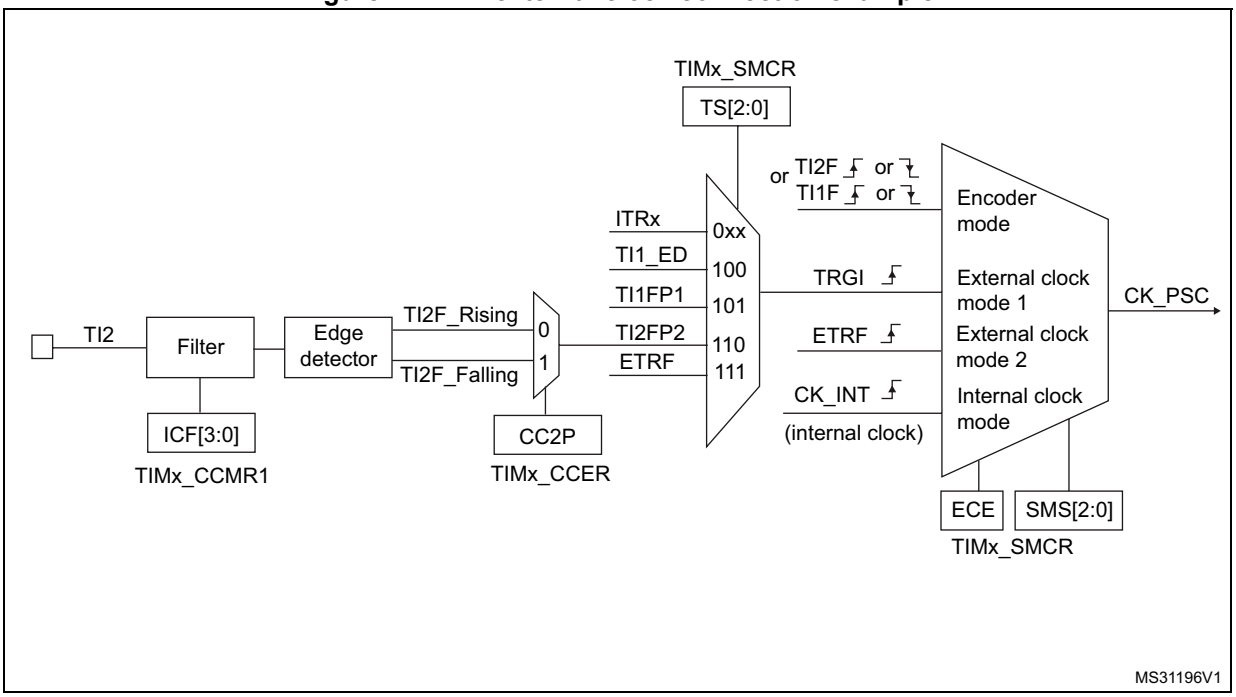

For example, to configure the upcounter to count in response to a rising edge on the TI2 input, use the following procedure:

For example, to configure the upcounter to count in response to a rising edge on the TI2 input, use the following procedure:

1. Configure channel 2 to detect rising edges on the TI2 input by writing CC2S= ‘01 in the TIMx_CCMR1 register.
2. Configure the input filter duration by writing the IC2F[3:0] bits in the TIMx_CCMR1 register (if no filter is needed, keep IC2F=0000).

Note: The capture prescaler is not used for triggering, so you don’t need to configure it.

3. Select rising edge polarity by writing CC2P=0 and CC2NP=0 and CC2NP=0 in the TIMx_CCER register.
4. Configure the timer in external clock mode 1 by writing SMS=111 in the TIMx_SMCR register.
5. Select TI2 as the input source by writing TS=110 in the TIMx_SMCR register.
6. Enable the counter by writing CEN=1 in the TIMx_CR1 register.

When a rising edge occurs on TI2, the counter counts once and the TIF flag is set.

The delay between the rising edge on TI2 and the actual clock of the counter is due to the resynchronization circuit on TI2 input.

Figure 245. Control circuit in external clock mode 1

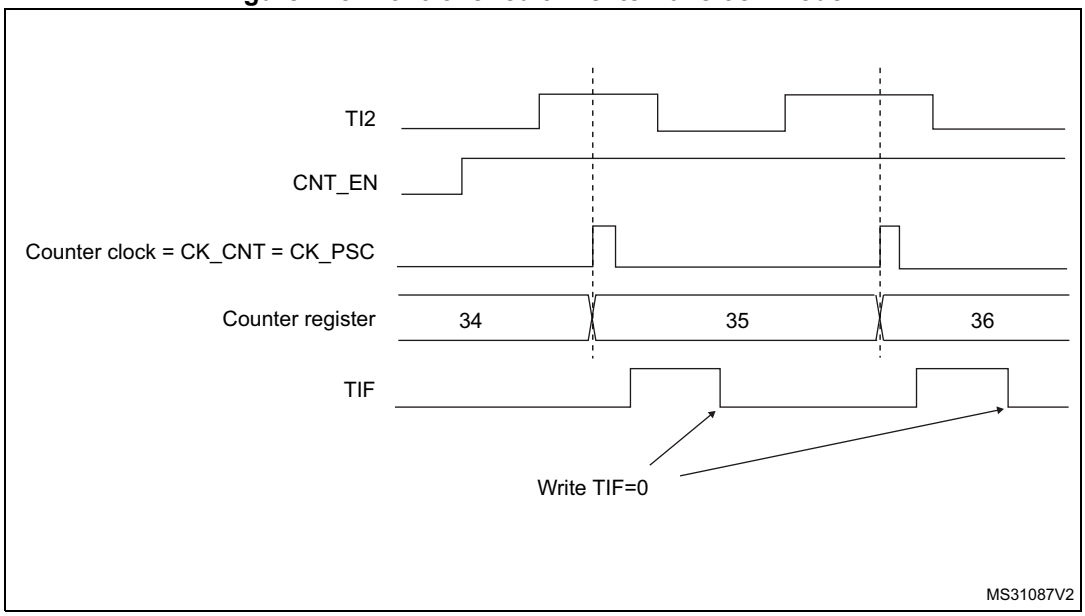

External clock source mode 2

This mode is selected by writing ECE=1 in the TIMx_SMCR register.

The counter can count at each rising or falling edge on the external trigger input ETR.

Figure 246 gives an overview of the external trigger input block.

Figure 246. External trigger input block

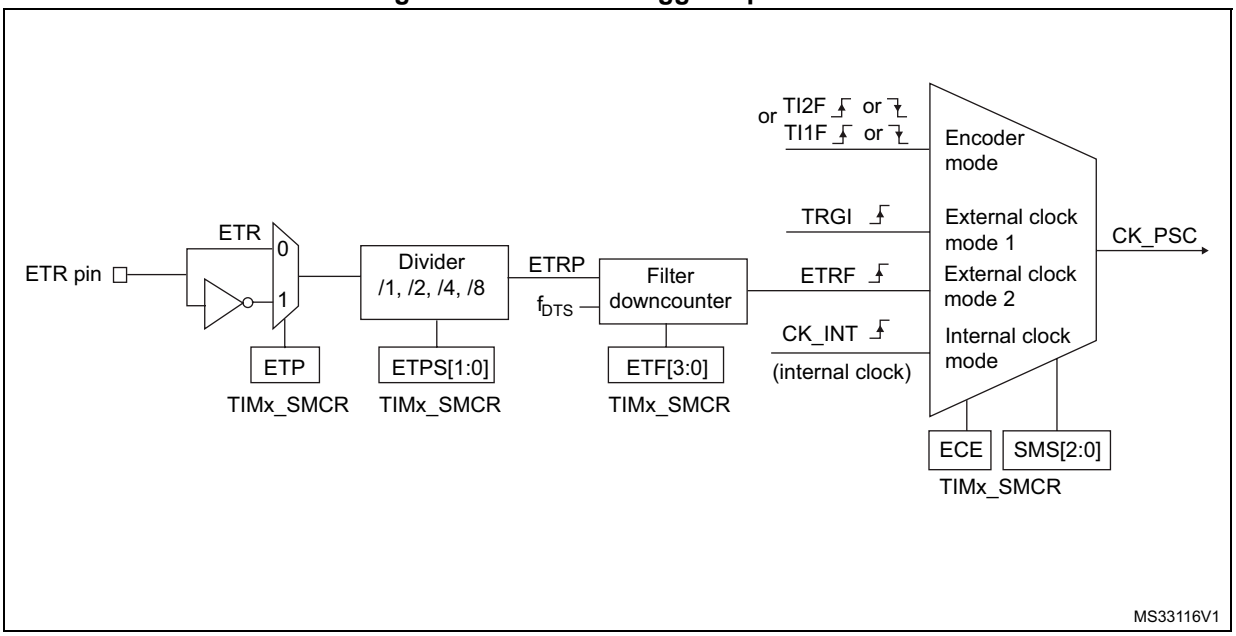

For example, to configure the upcounter to count each 2 rising edges on ETR, use the following procedure:

1. As no filter is needed in this example, write ETF[3:0]=0000 in the TIMx_SMCR register.
2. Set the prescaler by writing ETPS[1:0]=01 in the TIMx_SMCR register
3. Select rising edge detection on the ETR pin by writing ETP=0 in the TIMx_SMCR register
4. Enable external clock mode 2 by writing ECE=1 in the TIMx_SMCR register.
5. Enable the counter by writing CEN=1 in the TIMx_CR1 register.

The counter counts once each 2 ETR rising edges.

The delay between the rising edge on ETR and the actual clock of the counter is due to the resynchronization circuit on the ETRP signal.

Figure 247. Control circuit in external clock mode 2

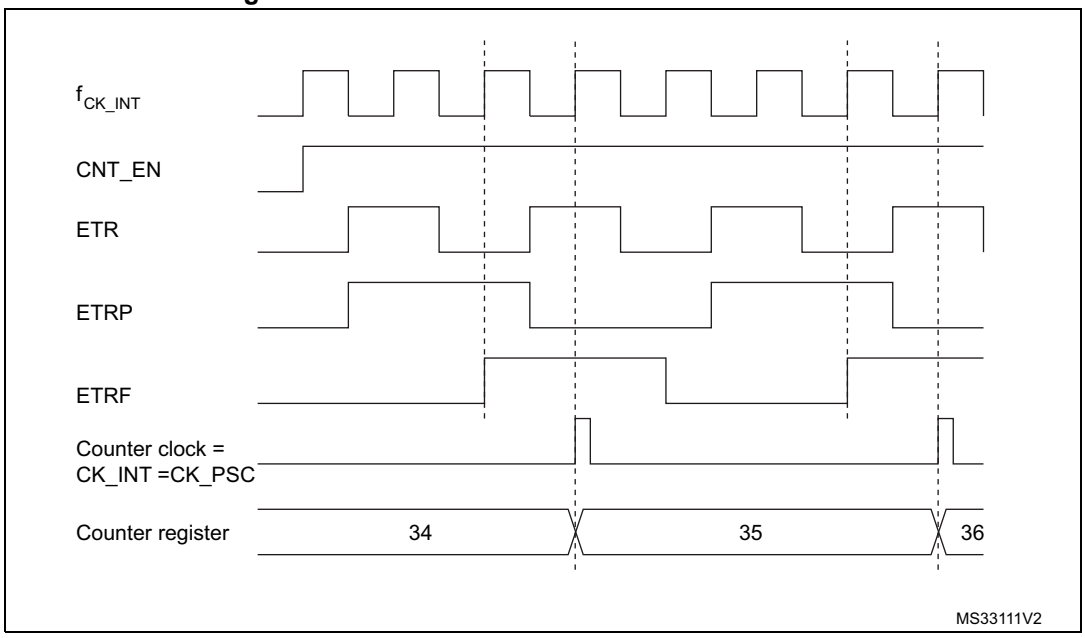

26.3.4 Capture/compare channels

Each Capture/Compare channel is built around a capture/compare register (including a shadow register), a input stage for capture (with digital filter, multiplexing and prescaler) and an output stage (with comparator and output control).

The following figure gives an overview of one Capture/Compare channel.

The input stage samples the corresponding TIx input to generate a filtered signal TIxF. Then, an edge detector with polarity selection generates a signal (TIxFPx) which can be used as trigger input by the slave mode controller or as the capture command. It is prescaled before the capture register (ICxPS).

Figure 248. Capture/compare channel (example: channel 1 input stage)

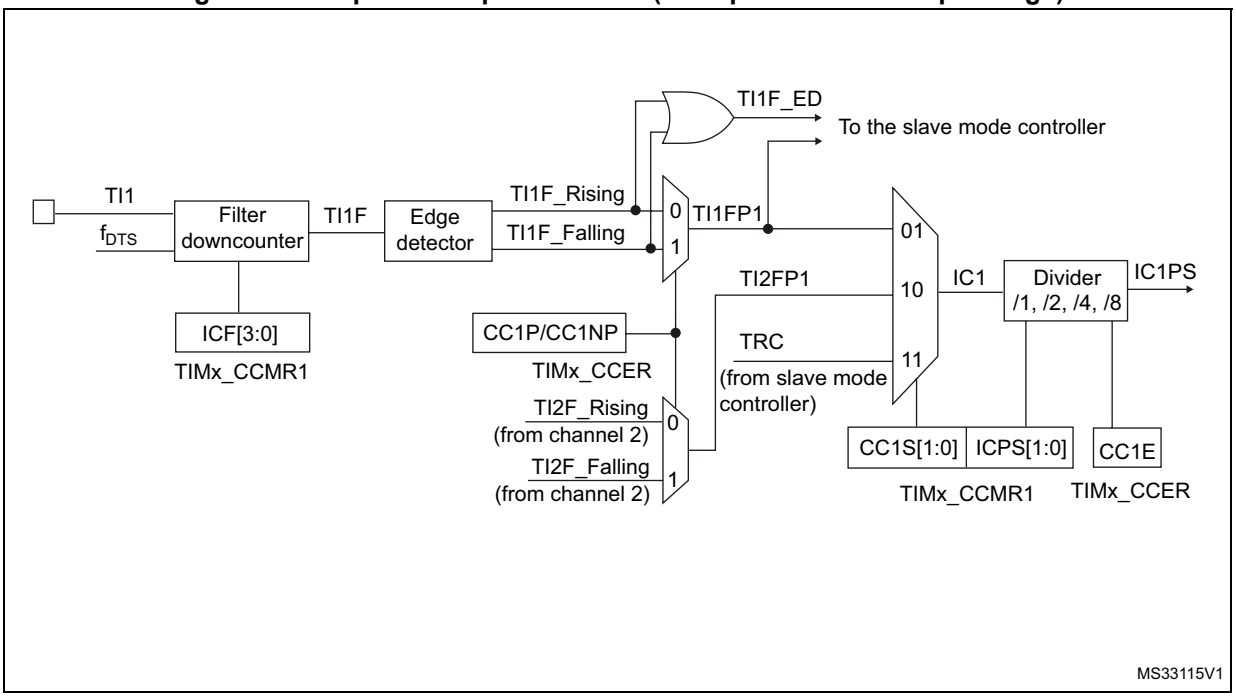

The output stage generates an intermediate waveform which is then used for reference: OCxRef (active high). The polarity acts at the end of the chain.

Figure 249. Capture/compare channel 1 main circuit

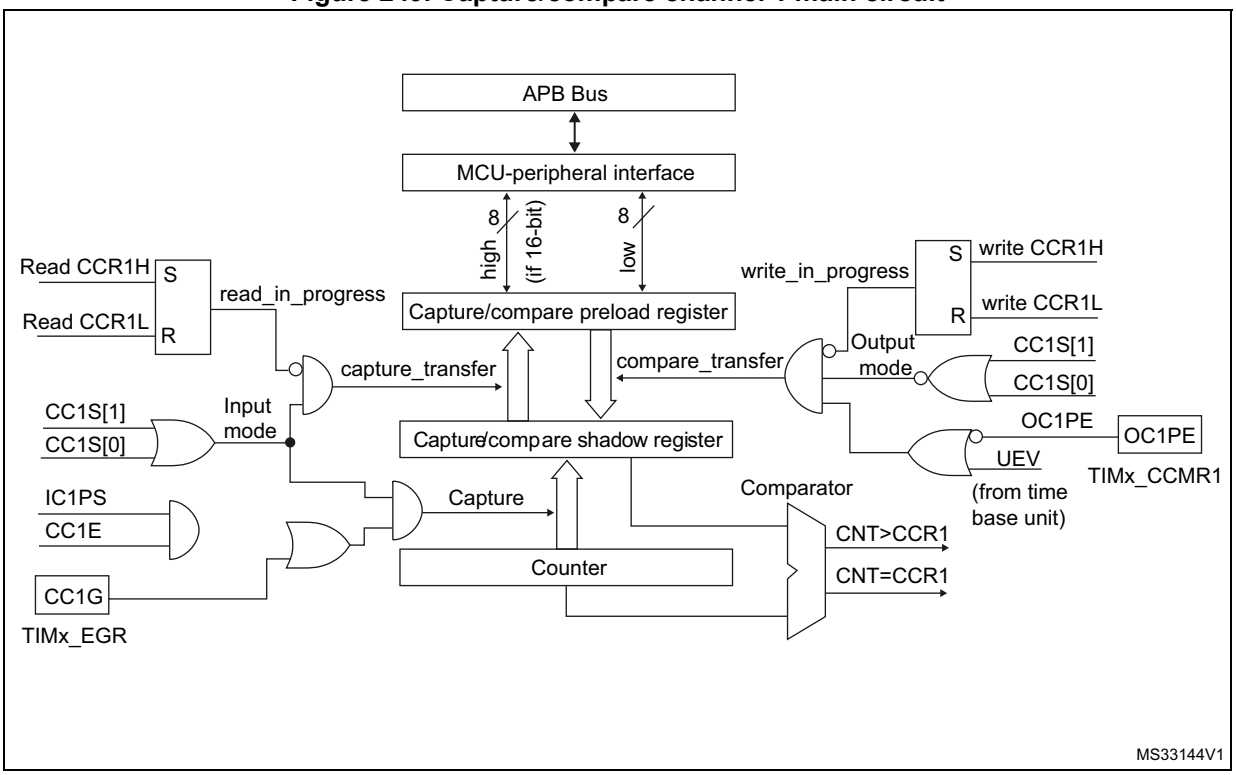

Figure 250. Output stage of capture/compare channel (channel 1)

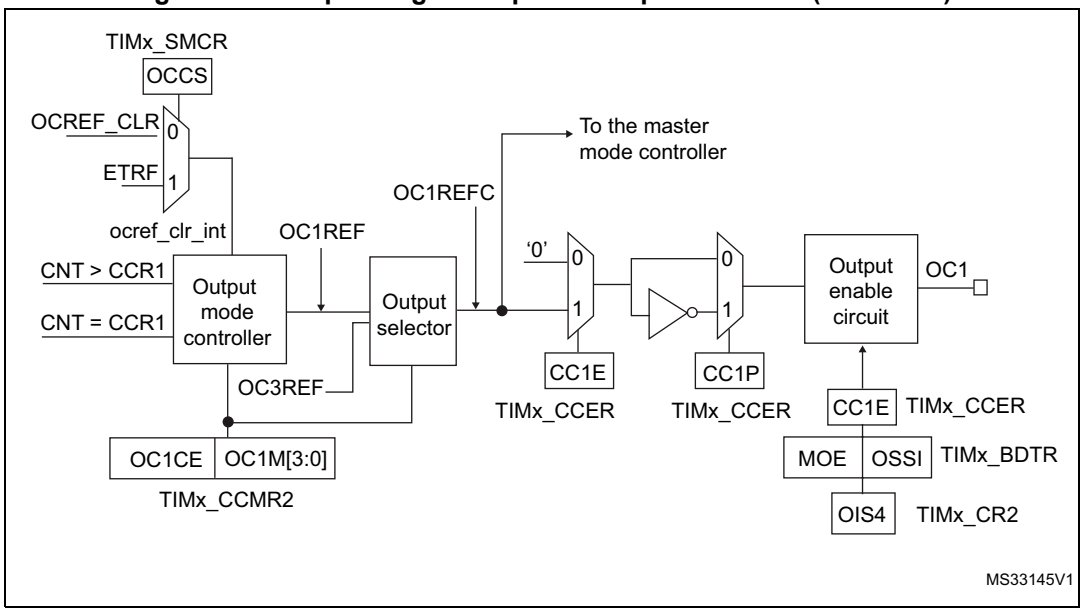

The capture/compare block is made of one preload register and one shadow register. Write and read always access the preload register.

In capture mode, captures are actually done in the shadow register, which is copied into the preload register.

In compare mode, the content of the preload register is copied into the shadow register which is compared to the counter.

26.3.5 Input capture mode

In Input capture mode, the Capture/Compare Registers (TIMx_CCRx) are used to latch the value of the counter after a transition detected by the corresponding ICx signal. When a capture occurs, the corresponding CCXIF flag (TIMx_SR register) is set and an interrupt or a DMA request can be sent if they are enabled. If a capture occurs while the CCxIF flag was already high, then the over-capture flag CCxOF (TIMx_SR register) is set. CCxIF can be cleared by software by writing it to 0 or by reading the captured data stored in the TIMx_CCRx register. CCxOF is cleared when you write it to 0.

The following example shows how to capture the counter value in TIMx_CCR1 when TI1 input rises. To do this, use the following procedure:

1. Select the active input: TIMx_CCR1 must be linked to the TI1 input, so write the CC1S bits to 01 in the TIMx_CCMR1 register. As soon as CC1S becomes different from 00, the channel is configured in input and the TIMx_CCR1 register becomes read-only.
2. Program the input filter duration you need with respect to the signal you connect to the timer (when the input is one of the TIx (ICxF bits in the TIMx_CCMRx register). Let's imagine that, when toggling, the input signal is not stable during at must 5 internal clock cycles. We must program a filter duration longer than these 5 clock cycles. We can validate a transition on TI1 when 8 consecutive samples with the new level have been

detected (sampled at f_{DTS} frequency). Then write IC1F bits to 0011 in the TIMx_CCMR1 register.

3. Select the edge of the active transition on the TI1 channel by writing the CC1P and CC1NP and CC1NP bits to 000 in the TIMx_CCER register (rising edge in this case).
4. Program the input prescaler. In our example, we wish the capture to be performed at each valid transition, so the prescaler is disabled (write IC1PS bits to 00 in the TIMx_CCMR1 register).
5. Enable capture from the counter into the capture register by setting the CC1E bit in the TIMx_CCER register.
6. If needed, enable the related interrupt request by setting the CC1IE bit in the TIMx_DIER register, and/or the DMA request by setting the CC1DE bit in the TIMx_DIER register.

When an input capture occurs:

- The TIMx_CCR1 register gets the value of the counter on the active transition.
- CC1IF flag is set (interrupt flag). CC1OF is also set if at least two consecutive captures occurred whereas the flag was not cleared.
- An interrupt is generated depending on the CC1IE bit.
- A DMA request is generated depending on the CC1DE bit.

In order to handle the overcapture, it is recommended to read the data before the overcapture flag. This is to avoid missing an overcapture which could happen after reading the flag and before reading the data.

Note: IC interrupt and/or DMA requests can be generated by software by setting the corresponding CCxG bit in the TIMx_EGR register.

26.3.6 PWM input mode

This mode is a particular case of input capture mode. The procedure is the same except:

- Two ICx signals are mapped on the same TIx input.
- These 2 ICx signals are active on edges with opposite polarity.
- One of the two TIxFP signals is selected as trigger input and the slave mode controller is configured in reset mode.

For example, you can measure the period (in TIMx_CCR1 register) and the duty cycle (in TIMx_CCR2 register) of the PWM applied on TI1 using the following procedure (depending on CK_INT frequency and prescaler value):

1. Select the active input for TIMx_CCR1: write the CC1S bits to 01 in the TIMx_CCMR1 register (TI1 selected).
2. Select the active polarity for TI1FP1 (used both for capture in TIMx_CCR1 and counter clear): write the CC1P to ‘0’ and the CC1NP bit to ‘0’ (active on rising edge).
3. Select the active input for TIMx_CCR2: write the CC2S bits to 10 in the TIMx_CCMR1 register (TI1 selected).
4. Select the active polarity for TI1FP2 (used for capture in TIMx_CCR2): write the CC2P bit to ‘1’ and the CC2NP bit to ’0’ (active on falling edge).
5. Select the valid trigger input: write the TS bits to 101 in the TIMx_SMCR register (TI1FP1 selected).
6. Configure the slave mode controller in reset mode: write the SMS bits to 100 in the TIMx_SMCR register.
7. Enable the captures: write the CC1E and CC2E bits to ‘1 in the TIMx_CCER register.

Figure 251. PWM input mode timing

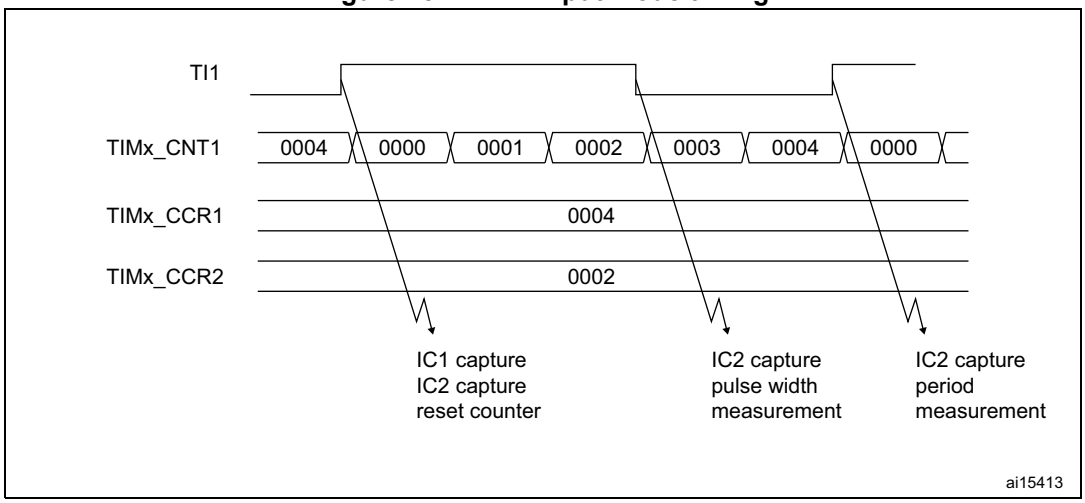

1. The PWM input mode can be used only with the TIMx_CH1/TIMx_CH2 signals due to the fact that only TI1FP1 and TI2FP2 are connected to the slave mode controller.

26.3.7 Forced output mode

In output mode (CCxS bits = 00 in the TIMx_CCMRx register), each output compare signal (OCxREF and then OCx) can be forced to active or inactive level directly by software, independently of any comparison between the output compare register and the counter.

To force an output compare signal (ocxref/OCx) to its active level, you just need to write 101 in the OCxM bits in the corresponding TIMx_CCMRx register. Thus ocxref is forced high (OCxREF is always active high) and OCx get opposite value to CCxP polarity bit.

e.g.: CCxP=0 (OCx active high) => OCx is forced to high level.

ocxref signal can be forced low by writing the OCxM bits to 100 in the TIMx_CCMRx register.

Anyway, the comparison between the TIMx_CCRx shadow register and the counter is still performed and allows the flag to be set. Interrupt and DMA requests can be sent accordingly. This is described in the Output Compare Mode section.

26.3.8 Output compare mode

This function is used to control an output waveform or indicating when a period of time has elapsed.

When a match is found between the capture/compare register and the counter, the output compare function:

- Assigns the corresponding output pin to a programmable value defined by the output compare mode (OCxM bits in the TIMx_CCMRx register) and the output polarity (CCxP bit in the TIMx_CCER register). The output pin can keep its level (OCXM=000), be set active (OCxM=001), be set inactive (OCxM=010) or can toggle (OCxM=011) on match.
- Sets a flag in the interrupt status register (CCxIF bit in the TIMx_SR register).
- Generates an interrupt if the corresponding interrupt mask is set (CCXIE bit in the TIMx_DIER register).
- Sends a DMA request if the corresponding enable bit is set (CCxDE bit in the TIMx_DIER register, CCDS bit in the TIMx_CR2 register for the DMA request selection).

The TIMx_CCRx registers can be programmed with or without preload registers using the OCxPE bit in the TIMx_CCMRx register.

In output compare mode, the update event UEV has no effect on ocxref and OCx output. The timing resolution is one count of the counter. Output compare mode can also be used to output a single pulse (in One-pulse mode).

Procedure

1. Select the counter clock (internal, external, prescaler).
2. Write the desired data in the TIMx_ARR and TIMx_CCRx registers.
3. Set the CCxIE and/or CCxDE bits if an interrupt and/or a DMA request is to be generated.
4. Select the output mode. For example, you must write OCxM=011, OCxPE=0, CCxP=0 and CCxE=1 to toggle OCx output pin when CNT matches CCRx, CCRx preload is not used, OCx is enabled and active high.
5. Enable the counter by setting the CEN bit in the TIMx_CR1 register.

The TIMx_CCRx register can be updated at any time by software to control the output waveform, provided that the preload register is not enabled (OCxPE=0, else TIMx_CCRx shadow register is updated only at the next update event UEV). An example is given in *Figure 252*.

Figure 252. Output compare mode, toggle on OC1

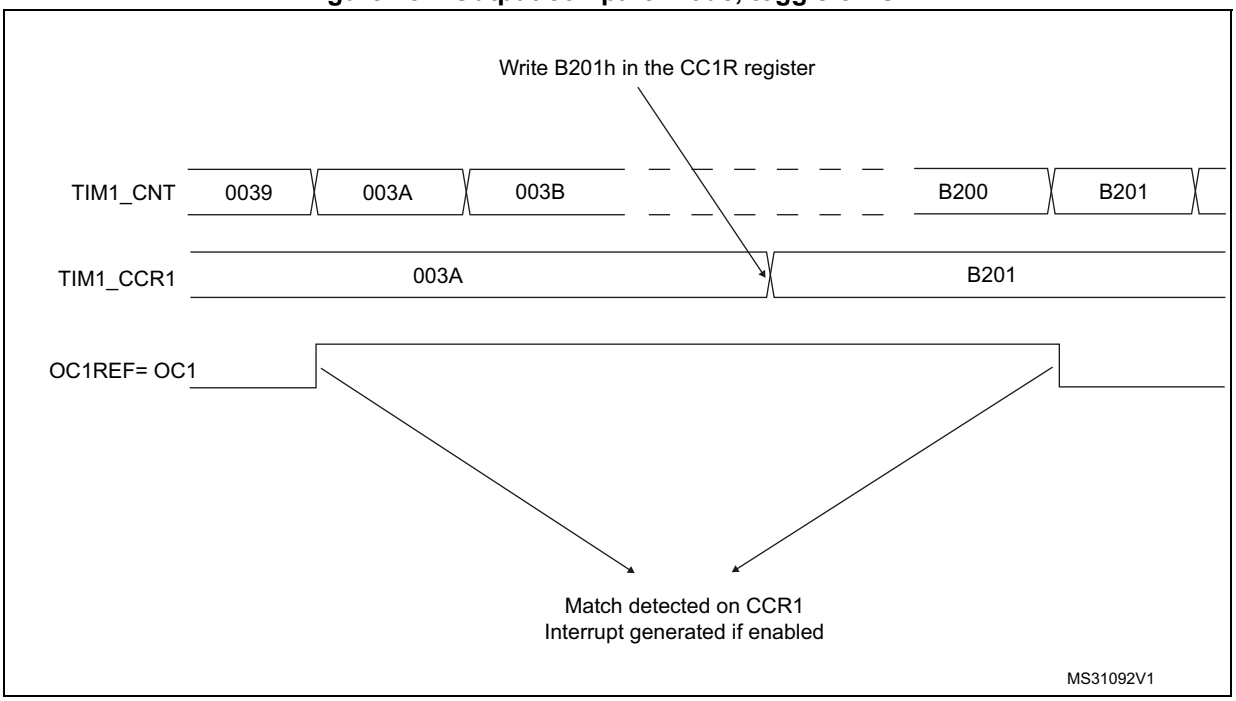

26.3.9 PWM mode

Pulse width modulation mode allows you to generate a signal with a frequency determined by the value of the TIMx_ARR register and a duty cycle determined by the value of the TIMx_CCRx register.

The PWM mode can be selected independently on each channel (one PWM per OCx output) by writing 110 (PWM mode 1) or ‘111 (PWM mode 2) in the OCxM bits in the TIMx_CCMRx register. You must enable the corresponding preload register by setting the OCxPE bit in the TIMx_CCMRx register, and eventually the auto-reload preload register (in upcounting or center-aligned modes) by setting the ARPE bit in the TIMx_CR1 register.

As the preload registers are transferred to the shadow registers only when an update event occurs, before starting the counter, you have to initialize all the registers by setting the UG bit in the TIMx_EGR register.

OCx polarity is software programmable using the CCxP bit in the TIMx_CCER register. It can be programmed as active high or active low. OCx output is enabled by the CCxE bit in the TIMx_CCER register. Refer to the TIMx_CCERx register description for more details.

In PWM mode (1 or 2), TIMx_CNT and TIMx_CCRx are always compared to determine whether TIMx_CCRx ≤ TIMx_CNT or TIMx_CNT ≤ TIMx_CCRx (depending on the direction of the counter). However, to comply with the OCREF_CLR functionality (OCREF can be

cleared by an external event through the ETR signal until the next PWM period), the OCREF signal is asserted only:

- When the result of the comparison or
- When the output compare mode (OCxM bits in TIMx_CCMRx register) switches from the “frozen” configuration (no comparison, OCxM=‘000) to one of the PWM modes (OCxM=‘110 or ‘111).

This forces the PWM by software while the timer is running.

The timer is able to generate PWM in edge-aligned mode or center-aligned mode depending on the CMS bits in the TIMx_CR1 register.

PWM edge-aligned mode

Upcounting configuration

Upcounting is active when the DIR bit in the TIMx_CR1 register is low. Refer to *Upcounting mode on page 720*.

In the following example, we consider PWM mode 1. The reference PWM signal OCxREF is high as long as TIMx_CNT <TIMx_CCRx else it becomes low. If the compare value in TIMx_CCRx is greater than the auto-reload value (in TIMx_ARR) then OCxREF is held at ‘1. If the compare value is 0 then OCxREF is held at ‘0. *Figure 253* shows some edge-aligned PWM waveforms in an example where TIMx_ARR=8.

Figure 253. Edge-aligned PWM waveforms (ARR=8)

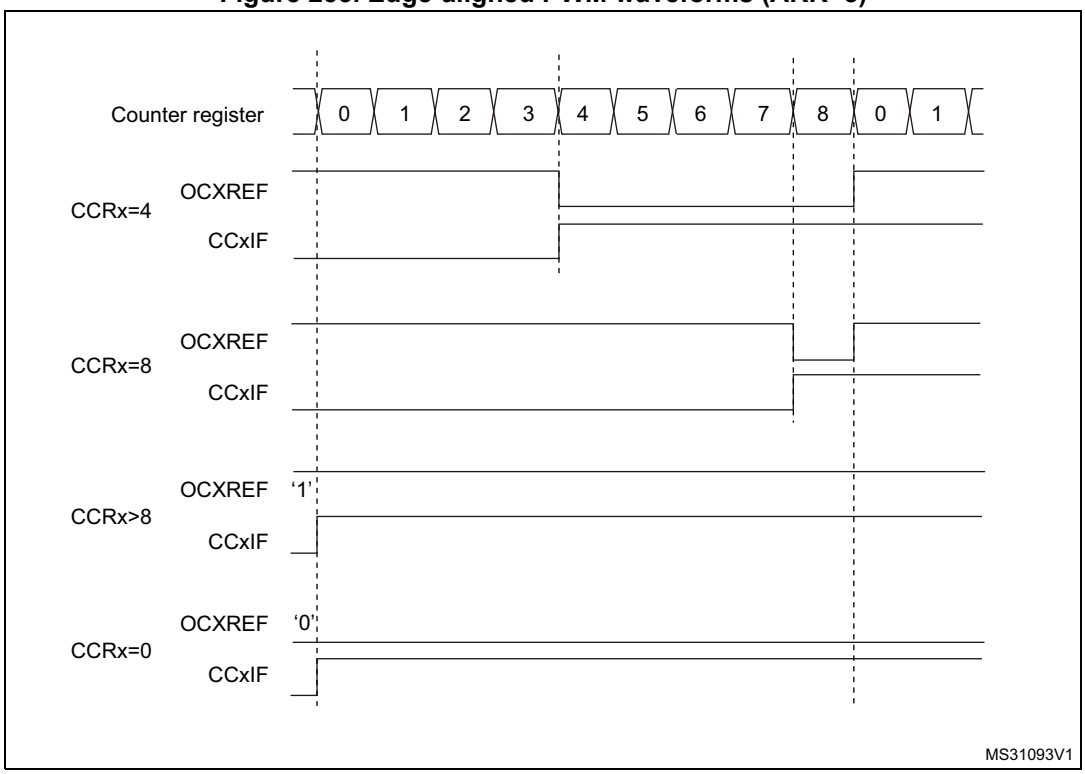

Downcounting configuration

Downcounting is active when DIR bit in TIMx_CR1 register is high. Refer to *Downcounting mode on page 723*.

In PWM mode 1, the reference signal ocxref is low as long as TIMx_CNT>TIMx_CCRx else it becomes high. If the compare value in TIMx_CCRx is greater than the auto-reload value in TIMx_ARR, then ocxref is held at 100%. PWM is not possible in this mode.

PWM center-aligned mode

Center-aligned mode is active when the CMS bits in TIMx_CR1 register are different from ‘00 (all the remaining configurations having the same effect on the ocxref/OCx signals). The compare flag is set when the counter counts up, when it counts down or both when it counts up and down depending on the CMS bits configuration. The direction bit (DIR) in the TIMx_CR1 register is updated by hardware and must not be changed by software. Refer to *Center-aligned mode (up/down counting) on page 726*.

Figure 254 shows some center-aligned PWM waveforms in an example where:

- TIMx_ARR=8,
- PWM mode is the PWM mode 1,
- The flag is set when the counter counts down corresponding to the center-aligned mode 1 selected for CMS=01 in TIMx_CR1 register.

Figure 254. Center-aligned PWM waveforms (ARR=8)

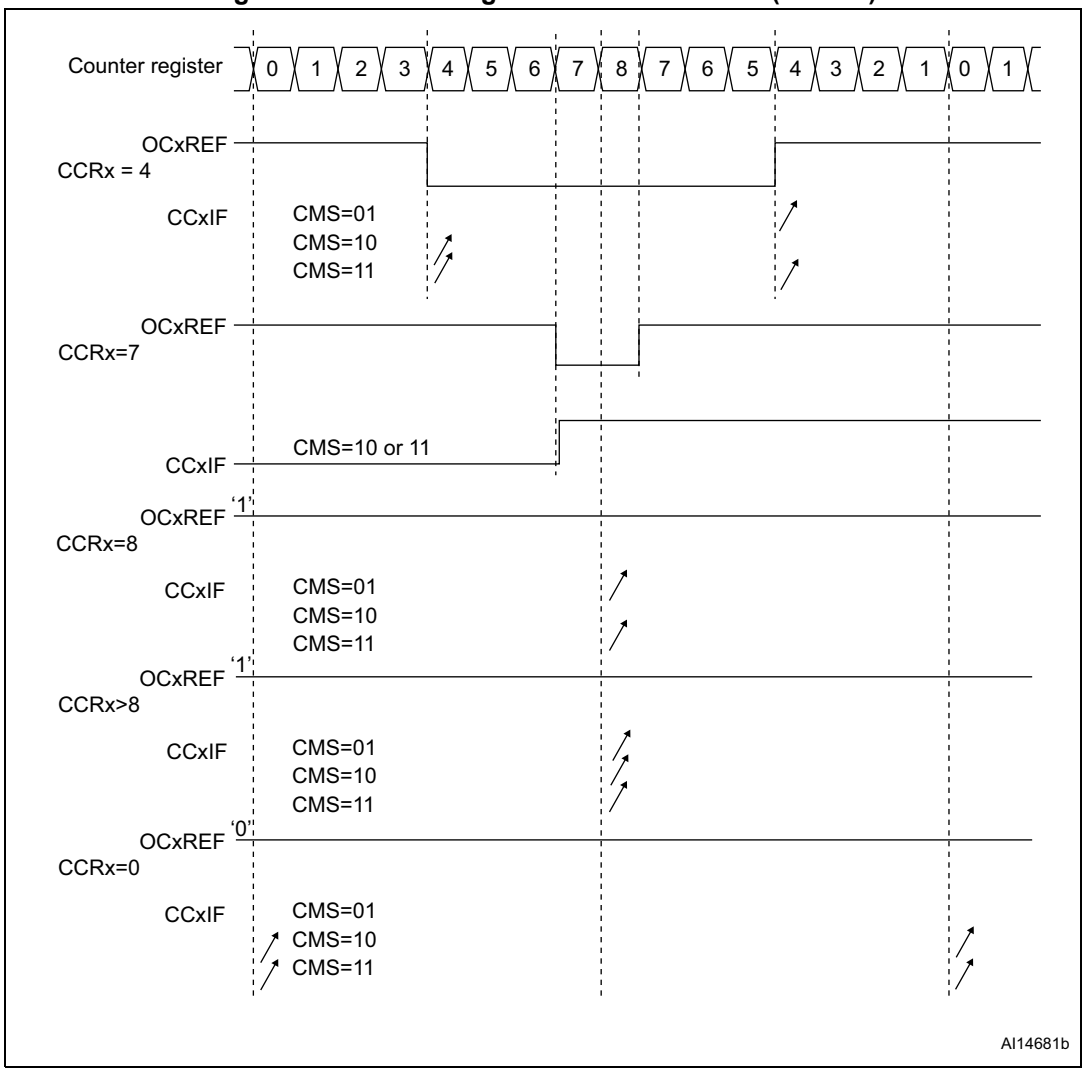

Hints on using center-aligned mode:

- When starting in center-aligned mode, the current up-down configuration is used. It means that the counter counts up or down depending on the value written in the DIR bit in the TIMx_CR1 register. Moreover, the DIR and CMS bits must not be changed at the same time by the software.
- Writing to the counter while running in center-aligned mode is not recommended as it can lead to unexpected results. In particular:
  - The direction is not updated if you write a value in the counter that is greater than the auto-reload value (TIMx_CNT>TIMx_ARR). For example, if the counter was counting up, it continues to count up.
  - The direction is updated if you write 0 or write the TIMx_ARR value in the counter but no Update Event UEV is generated.
- The safest way to use center-aligned mode is to generate an update by software (setting the UG bit in the TIMx_EGR register) just before starting the counter and not to write the counter while it is running.

26.3.10 Asymmetric PWM mode

Asymmetric mode allows two center-aligned PWM signals to be generated with a programmable phase shift. While the frequency is determined by the value of the TIMx_ARR register, the duty cycle and the phase-shift are determined by a pair of TIMx_CCRx registers. One register controls the PWM during up-counting, the second during down counting, so that PWM is adjusted every half PWM cycle:

- OC1REFC (or OC2REFC) is controlled by TIMx_CCR1 and TIMx_CCR2
- OC3REFC (or OC4REFC) is controlled by TIMx_CCR3 and TIMx_CCR4

Asymmetric PWM mode can be selected independently on two channels (one OCx output per pair of CCR registers) by writing ‘1110’ (Asymmetric PWM mode 1) or ‘1111’ (Asymmetric PWM mode 2) in the OCxM bits in the TIMx_CCMRx register.

Note: The OCxM[3:0] bit field is split into two parts for compatibility reasons, the most significant bit is not contiguous with the 3 least significant ones.

When a given channel is used as asymmetric PWM channel, its secondary channel can also be used. For instance, if an OC1REFC signal is generated on channel 1 (Asymmetric PWM mode 1), it is possible to output either the OC2REF signal on channel 2, or an OC2REFC signal resulting from asymmetric PWM mode 2.

Figure 255 shows an example of signals that can be generated using Asymmetric PWM mode (channels 1 to 4 are configured in Asymmetric PWM mode 1).

Figure 255. Generation of 2 phase-shifted PWM signals with 50% duty cycle

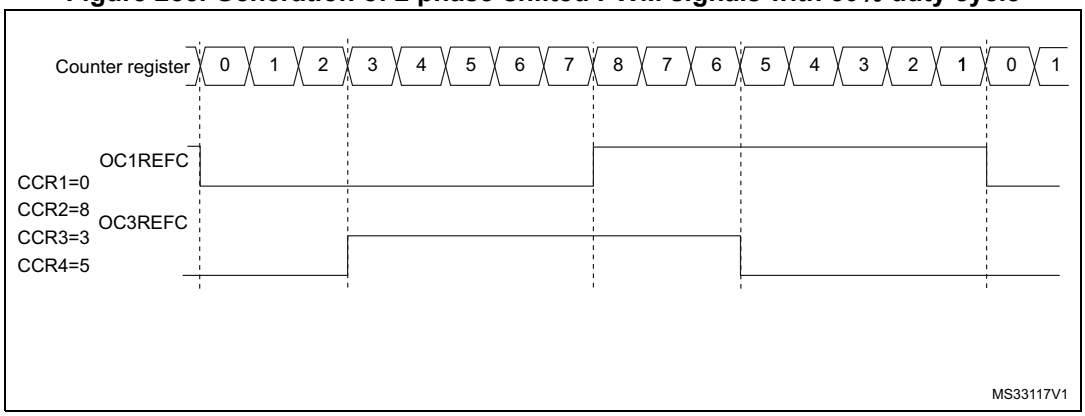

26.3.11 Combined PWM mode

Combined PWM mode allows two edge or center-aligned PWM signals to be generated with programmable delay and phase shift between respective pulses. While the frequency is determined by the value of the TIMx_ARR register, the duty cycle and delay are determined by the two TIMx_CCRx registers. The resulting signals, OCxREFC, are made of an OR or AND logical combination of two reference PWMs:

– OC1REFC (or OC2REFC) is controlled by TIMx_CCR1 and TIMx_CCR2

– OC3REFC (or OC4REFC) is controlled by TIMx_CCR3 and TIMx_CCR4

Combined PWM mode can be selected independently on two channels (one OCx output per pair of CCR registers) by writing ‘1100’ (Combined PWM mode 1) or ‘1101’ (Combined PWM mode 2) in the OCxM bits in the TIMx_CCMRx register.

When a given channel is used as combined PWM channel, its secondary channel must be configured in the opposite PWM mode (for instance, one in Combined PWM mode 1 and the other in Combined PWM mode 2).

Note: The OCxM[3:0] bit field is split into two parts for compatibility reasons, the most significant bit is not contiguous with the 3 least significant ones.

Figure 256 shows an example of signals that can be generated using Asymmetric PWM mode, obtained with the following configuration:

- Channel 1 is configured in Combined PWM mode 2,
- Channel 2 is configured in PWM mode 1,
- Channel 3 is configured in Combined PWM mode 2,
- Channel 4 is configured in PWM mode 1

Figure 256. Combined PWM mode on channels 1 and 3

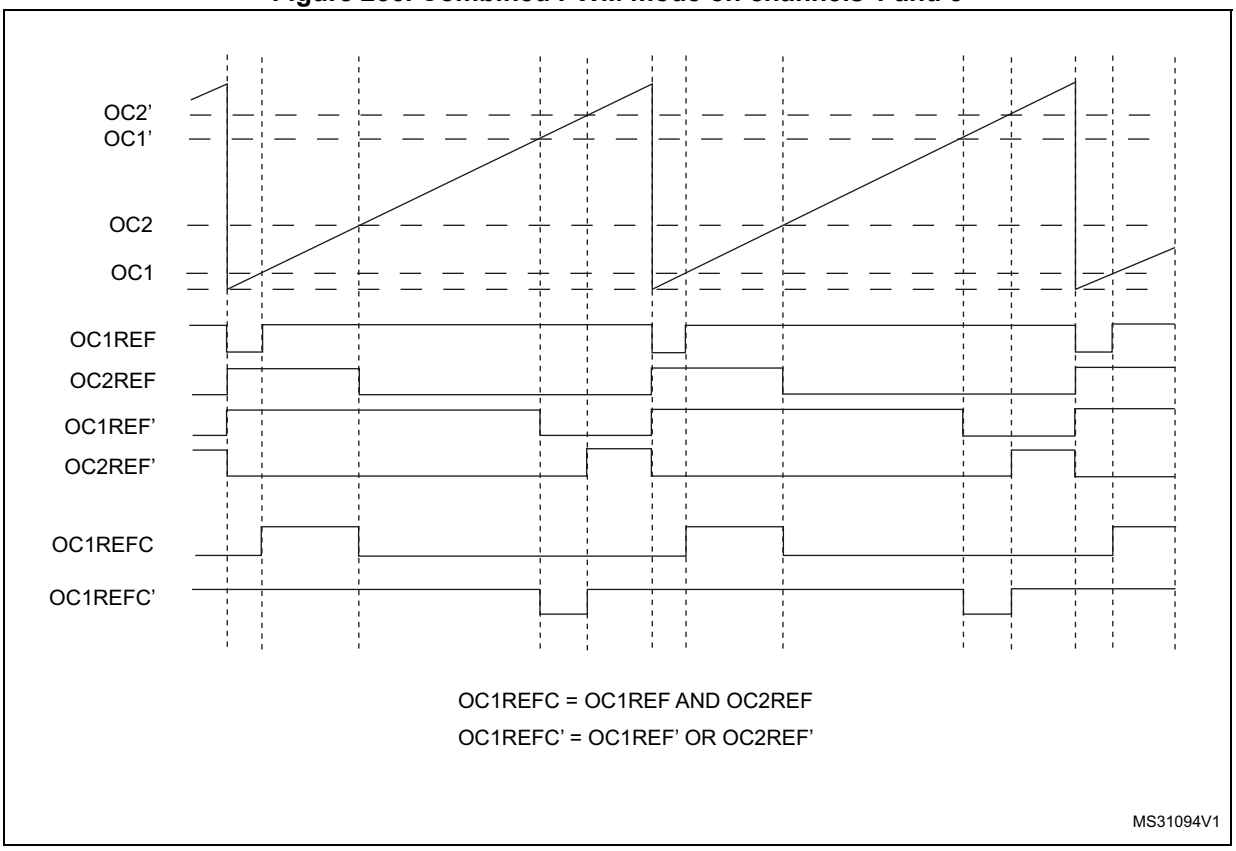

26.3.12 Clearing the OCxREF signal on an external event

The OCxREF signal of a given channel can be cleared when a high level is applied on the ocref_clr_int input (OCxCE enable bit in the corresponding TIMx_CCMRx register set to 1). OCxREF remains low until the next update event (UEV) occurs. This function can only be used in Output compare and PWM modes. It does not work in Forced mode.

OCREF_CLR_INPUT can be selected between the OCREF_CLR input and ETRF (ETR after the filter) by configuring the OCCS bit in the TIMx_SMCR register.

The OCxREF signal for a given channel can be reset by applying a high level on the ETRF input (OCxCE enable bit set to 1 in the corresponding TIMx_CCMRx register). OCxREF remains low until the next update event (UEV) occurs.

This function can be used only in the output compare and PWM modes. It does not work in forced mode.

For example, the OCxREF signal can be connected to the output of a comparator to be used for current handling. In this case, ETR must be configured as follows:

1. The external trigger prescaler should be kept off: bits ETPS[1:0] in the TIMx_SMCR register are cleared to 00.
2. The external clock mode 2 must be disabled: bit ECE in the TIM1_SMCR register is cleared to 0.
3. The external trigger polarity (ETP) and the external trigger filter (ETF) can be configured according to the application's needs.

Figure 257 shows the behavior of the OCxREF signal when the ETRF input becomes high, for both values of the OCxCE enable bit. In this example, the timer TIMx is programmed in PWM mode.

Figure 257. Clearing TIMx OCxREF

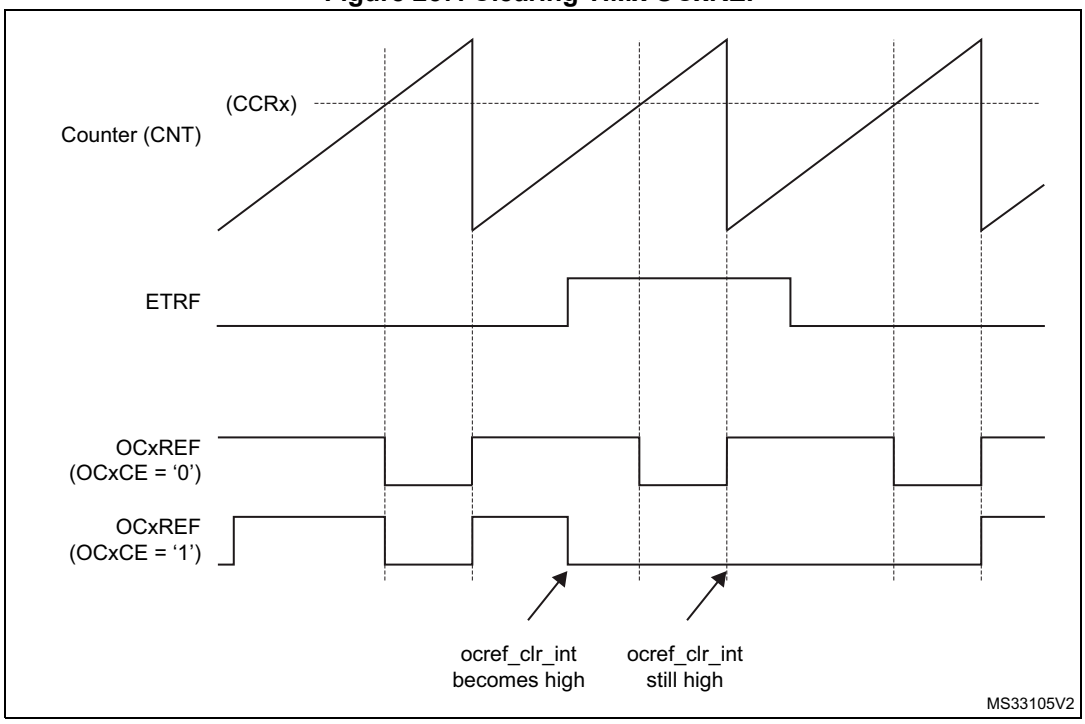

Note: In case of a PWM with a 100% duty cycle (if CCRx>ARR), OCxREF is enabled again at the next counter overflow.

26.3.13 One-pulse mode

One-pulse mode (OPM) is a particular case of the previous modes. It allows the counter to be started in response to a stimulus and to generate a pulse with a programmable length after a programmable delay.

Starting the counter can be controlled through the slave mode controller. Generating the waveform can be done in output compare mode or PWM mode. You select One-pulse mode by setting the OPM bit in the TIMx_CR1 register. This makes the counter stop automatically at the next update event UEV.

A pulse can be correctly generated only if the compare value is different from the counter initial value. Before starting (when the timer is waiting for the trigger), the configuration must be:

- CNT<CCRx ≤ ARR (in particular, 0<CCRx),

Figure 258. Example of one-pulse mode.

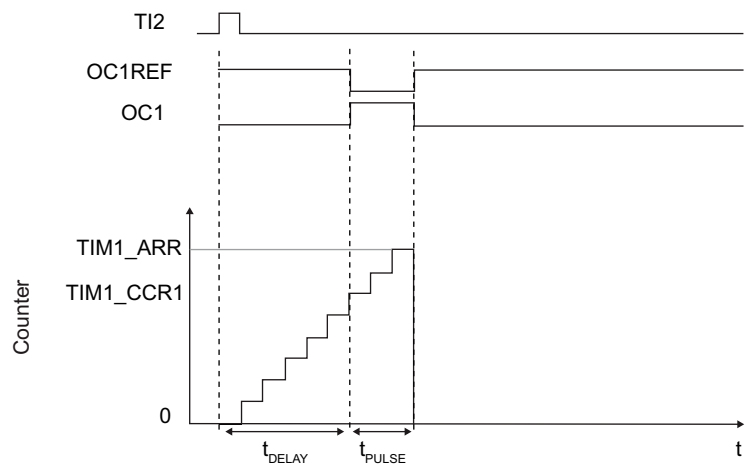

For example you may want to generate a positive pulse on OC1 with a length of t_{PULSE} and after a delay of t_{DELAY} as soon as a positive edge is detected on the TI2 input pin.

Let's use TI2FP2 as trigger 1:

- Map TI2FP2 on TI2 by writing CC2S=01 in the TIMx_CCMR1 register.
- TI2FP2 must detect a rising edge, write CC2P=0 and CC2NP='0' in the TIMx_CCER register.
- Configure TI2FP2 as trigger for the slave mode controller (TRGI) by writing TS=110 in the TIMx_SMCR register.
- TI2FP2 is used to start the counter by writing SMS to '110 in the TIMx_SMCR register (trigger mode).

The OPM waveform is defined by writing the compare registers (taking into account the clock frequency and the counter prescaler).

- The t_{DELAY} is defined by the value written in the TIMx_CCR1 register.
- The t_{PULSE} is defined by the difference between the auto-reload value and the compare value (TIMx_ARR - TIMx_CCR1).
- Let's say you want to build a waveform with a transition from '0 to '1 when a compare match occurs and a transition from '1 to '0 when the counter reaches the auto-reload value. To do this you enable PWM mode 2 by writing OC1M=111 in the TIMx_CCMR1 register. You can optionally enable the preload registers by writing OC1PE=1 in the TIMx_CCMR1 register and ARPE in the TIMx_CR1 register. In this case you have to write the compare value in the TIMx_CCR1 register, the auto-reload value in the TIMx_ARR register, generate an update by setting the UG bit and wait for external trigger event on TI2. CC1P is written to '0 in this example.

In our example, the DIR and CMS bits in the TIMx_CR1 register should be low.

You only want 1 pulse (Single mode), so you write '1 in the OPM bit in the TIMx_CR1 register to stop the counter at the next update event (when the counter rolls over from the auto-reload value back to 0). When OPM bit in the TIMx_CR1 register is set to '0', so the Repetitive Mode is selected.

Particular case: OCx fast enable:

In One-pulse mode, the edge detection on TIx input set the CEN bit which enables the counter. Then the comparison between the counter and the compare value makes the output toggle. But several clock cycles are needed for these operations and it limits the minimum delay t_{DELAY} min we can get.

If you want to output a waveform with the minimum delay, you can set the OCxFE bit in the TIMx_CCMRx register. Then OCxRef (and OCx) is forced in response to the stimulus, without taking in account the comparison. Its new level is the same as if a compare match had occurred. OCxFE acts only if the channel is configured in PWM1 or PWM2 mode.

26.3.14 Retriggerable one pulse mode (OPM)

This mode allows the counter to be started in response to a stimulus and to generate a pulse with a programmable length, but with the following differences with Non-retriggerable one pulse mode described in *Section 26.3.13*:

- The pulse starts as soon as the trigger occurs (no programmable delay)
- The pulse is extended if a new trigger occurs before the previous one is completed

The timer must be in Slave mode, with the bits SMS[3:0] = '1000' (Combined Reset + trigger mode) in the TIMx_SMCR register, and the OCxM[3:0] bits set to '1000' or '1001' for Retriggerable OPM mode 1 or 2.

If the timer is configured in Up-counting mode, the corresponding CCRx must be set to 0 (the ARR register sets the pulse length). If the timer is configured in Down-counting mode CCRx must be above or equal to ARR.

Note: In retriggerable one pulse mode, the CCxIF flag is not significant.

The OCxM[3:0] and SMS[3:0] bit fields are split into two parts for compatibility reasons, the most significant bit is not contiguous with the 3 least significant ones.

This mode must not be used with center-aligned PWM modes. It is mandatory to have CMS[1:0] = 00 in TIMx_CR1.

Figure 259Retriggerable one pulse mode

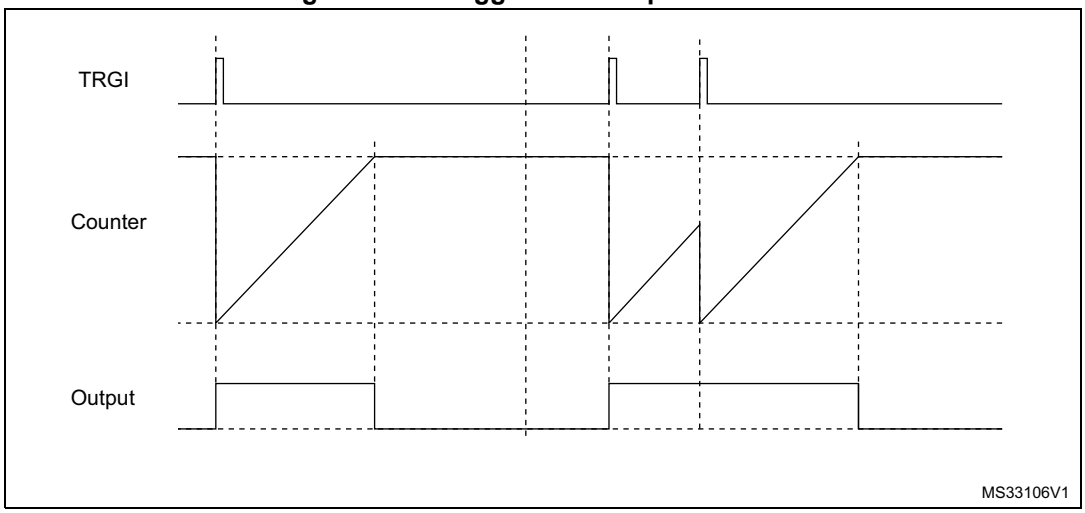

26.3.15 Encoder interface mode

To select Encoder Interface mode write SMS=‘001 in the TIMx_SMCR register if the counter is counting on TI2 edges only, SMS=010 if it is counting on TI1 edges only and SMS=011 if it is counting on both TI1 and TI2 edges.

Select the TI1 and TI2 polarity by programming the CC1P and CC2P bits in the TIMx_CCER register. CC1NP and CC2NP must be kept cleared. When needed, you can program the input filter as well. CC1NP and CC2NP must be kept low.

The two inputs TI1 and TI2 are used to interface to an incremental encoder. Refer to *Table 114*. The counter is clocked by each valid transition on TI1FP1 or TI2FP2 (TI1 and TI2 after input filter and polarity selection, TI1FP1=TI1 if not filtered and not inverted, TI2FP2=TI2 if not filtered and not inverted) assuming that it is enabled (CEN bit in TIMx_CR1 register written to ‘1). The sequence of transitions of the two inputs is evaluated and generates count pulses as well as the direction signal. Depending on the sequence the counter counts up or down, the DIR bit in the TIMx_CR1 register is modified by hardware accordingly. The DIR bit is calculated at each transition on any input (TI1 or TI2), whatever the counter is counting on TI1 only, TI2 only or both TI1 and TI2.

Encoder interface mode acts simply as an external clock with direction selection. This means that the counter just counts continuously between 0 and the auto-reload value in the TIMx_ARR register (0 to ARR or ARR down to 0 depending on the direction). So you must configure TIMx_ARR before starting. In the same way, the capture, compare, prescaler, trigger output features continue to work as normal.

In this mode, the counter is modified automatically following the speed and the direction of the quadrature encoder and its content, therefore, always represents the encoder’s position. The count direction correspond to the rotation direction of the connected sensor. The table summarizes the possible combinations, assuming TI1 and TI2 don’t switch at the same time.

Table 114. Counting direction versus encoder signals

Active edge	Level on opposite signal (TI1FP1 for TI2, TI2FP2 for TI1)	TI1FP1 signal		TI2FP2 signal	
		Rising	Falling	Rising	Falling
Counting on TI1 only	High	Down	Up	No Count	No Count
	Low	Up	Down	No Count	No Count
Counting on TI2 only	High	No Count	No Count	Up	Down
	Low	No Count	No Count	Down	Up
Counting on TI1 and TI2	High	Down	Up	Up	Down
	Low	Up	Down	Down	Up

An external incremental encoder can be connected directly to the MCU without external interface logic. However, comparators are normally be used to convert the encoder's differential outputs to digital signals. This greatly increases noise immunity. The third encoder output which indicate the mechanical zero position, may be connected to an external interrupt input and trigger a counter reset.

Figure 260 gives an example of counter operation, showing count signal generation and direction control. It also shows how input jitter is compensated where both edges are selected. This might occur if the sensor is positioned near to one of the switching points. For this example we assume that the configuration is the following:

- CC1S= 01 (TIMx_CCMR1 register, TI1FP1 mapped on TI1)
- CC2S= 01 (TIMx_CCMR2 register, TI2FP2 mapped on TI2)
- CC1P and CC1NP = '0' (TIMx_CCER register, TI1FP1 noninverted, TI1FP1=TI1)
- CC2P and CC2NP = '0' (TIMx_CCER register, TI2FP2 noninverted, TI2FP2=TI2)
- SMS= 011 (TIMx_SMCR register, both inputs are active on both rising and falling edges)
- CEN= 1 (TIMx_CR1 register, Counter is enabled)

Figure 260. Example of counter operation in encoder interface mode

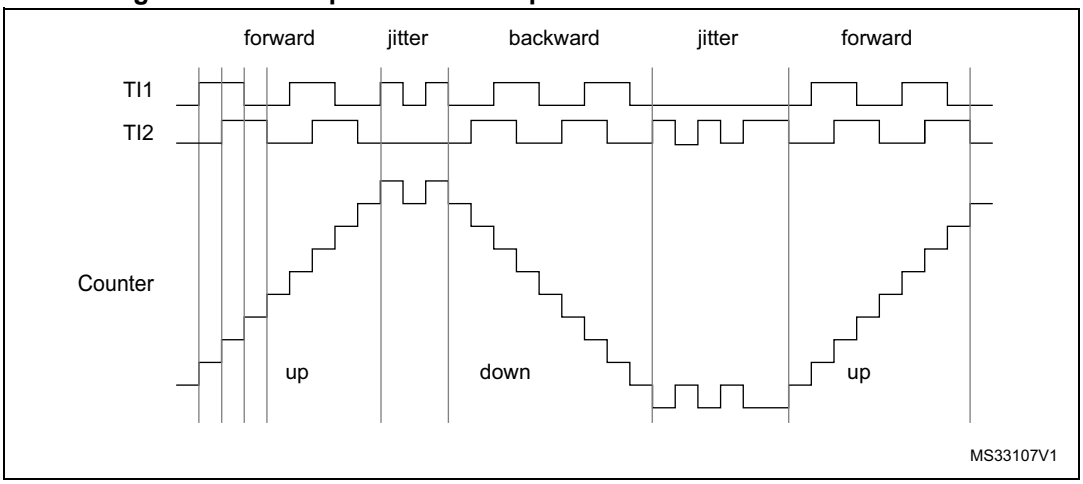

Figure 261 gives an example of counter behavior when TI1FP1 polarity is inverted (same configuration as above except CC1P=1).

Figure 261. Example of encoder interface mode with TI1FP1 polarity inverted

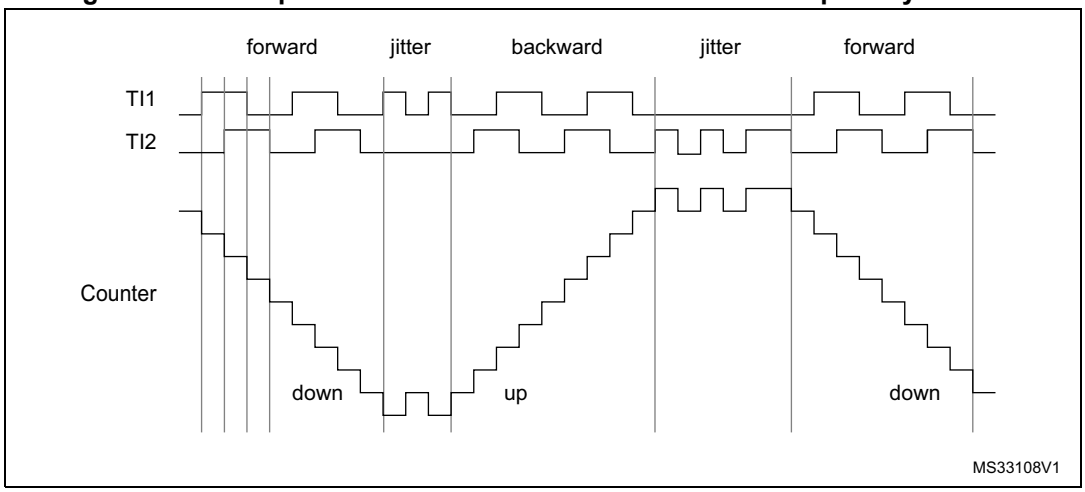

The timer, when configured in Encoder Interface mode provides information on the sensor's current position. You can obtain dynamic information (speed, acceleration, deceleration) by measuring the period between two encoder events using a second timer configured in capture mode. The output of the encoder which indicates the mechanical zero can be used for this purpose. Depending on the time between two events, the counter can also be read at regular times. You can do this by latching the counter value into a third input capture register if available (then the capture signal must be periodic and can be generated by another timer). when available, it is also possible to read its value through a DMA request generated by a Real-Time clock.

26.3.16 UIF bit remapping

The IUFREMAP bit in the TIMx_CR1 register forces a continuous copy of the update interrupt flag (UIF) into bit 31 of the timer counter register's bit 31 (TIMxCNT[31]). This allows to atomically read both the counter value and a potential roll-over condition signaled by the UIFCPY flag. It eases the calculation of angular speed by avoiding race conditions caused, for instance, by a processing shared between a background task (counter reading) and an interrupt (update interrupt).

There is no latency between the UIF and UIFCPY flag assertions.

In 32-bit timer implementations, when the IUFREMAP bit is set, bit 31 of the counter is overwritten by the UIFCPY flag upon read access (the counter's most significant bit is only accessible in write mode).

26.3.17 Timer input XOR function

The TI1S bit in the TIM1xx_CR2 register, allows the input filter of channel 1 to be connected to the output of a XOR gate, combining the three input pins TIMx_CH1 to TIMx_CH3.

The XOR output can be used with all the timer input functions such as trigger or input capture.

An example of this feature used to interface Hall sensors is given in *Section 25.3.25: Interfacing with Hall sensors on page 669*.

26.3.18 Timers and external trigger synchronization

The TIMx Timers can be synchronized with an external trigger in several modes: Reset mode, Gated mode and Trigger mode.

Slave mode: Reset mode

The counter and its prescaler can be reinitialized in response to an event on a trigger input. Moreover, if the URS bit from the TIMx_CR1 register is low, an update event UEV is generated. Then all the preloaded registers (TIMx_ARR, TIMx_CCRx) are updated.

In the following example, the upcounter is cleared in response to a rising edge on TI1 input:

1. Configure the channel 1 to detect rising edges on TI1. Configure the input filter duration (in this example, we don't need any filter, so we keep IC1F=0000). The capture prescaler is not used for triggering, so you don't need to configure it. The CC1S bits select the input capture source only, CC1S = 01 in the TIMx_CCMR1 register. Write CC1P=0 and CC1NP=0 in TIMx_CCER register to validate the polarity (and detect rising edges only).
2. Configure the timer in reset mode by writing SMS=100 in TIMx_SMCR register. Select TI1 as the input source by writing TS=101 in TIMx_SMCR register.
3. Start the counter by writing CEN=1 in the TIMx_CR1 register.

The counter starts counting on the internal clock, then behaves normally until TI1 rising edge. When TI1 rises, the counter is cleared and restarts from 0. In the meantime, the trigger flag is set (TIF bit in the TIMx_SR register) and an interrupt request, or a DMA request can be sent if enabled (depending on the TIE and TDE bits in TIMx_DIER register).

The following figure shows this behavior when the auto-reload register TIMx_ARR=0x36. The delay between the rising edge on TI1 and the actual reset of the counter is due to the resynchronization circuit on TI1 input.

Figure 262. Control circuit in reset mode

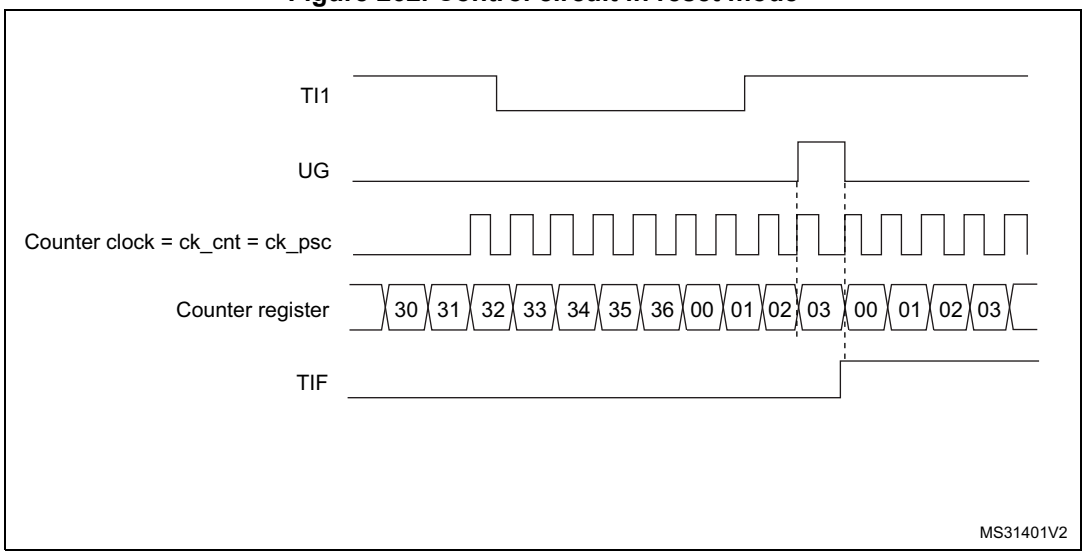

Slave mode: Gated mode

The counter can be enabled depending on the level of a selected input.

In the following example, the upcounter counts only when TI1 input is low:

1. Configure the channel 1 to detect low levels on TI1. Configure the input filter duration (in this example, we don't need any filter, so we keep IC1F=0000). The capture prescaler is not used for triggering, so you don't need to configure it. The CC1S bits select the input capture source only, CC1S=01 in TIMx_CCMR1 register. Write CC1P=1 and CC1NP=0 in TIMx_CCER register to validate the polarity (and detect low level only).
2. Configure the timer in gated mode by writing SMS=101 in TIMx_SMCR register. Select TI1 as the input source by writing TS=101 in TIMx_SMCR register.
3. Enable the counter by writing CEN=1 in the TIMx_CR1 register (in gated mode, the counter doesn't start if CEN=0, whatever is the trigger input level).

The counter starts counting on the internal clock as long as TI1 is low and stops as soon as TI1 becomes high. The TIF flag in the TIMx_SR register is set both when the counter starts or stops.

The delay between the rising edge on TI1 and the actual stop of the counter is due to the resynchronization circuit on TI1 input.

Figure 263. Control circuit in gated mode

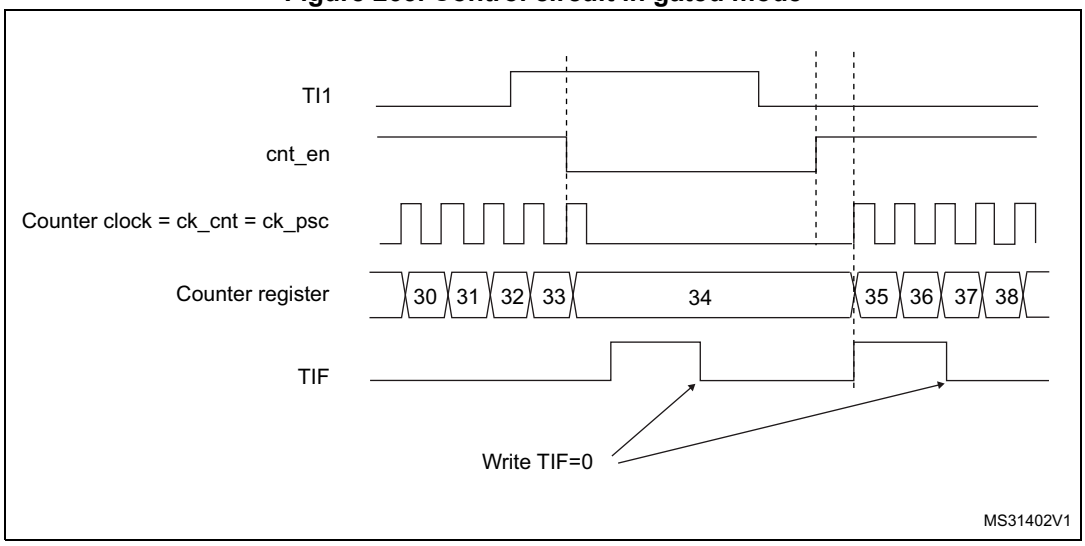

1. The configuration "CCxP=CCxNP=1" (detection of both rising and falling edges) does not have any effect in gated mode because gated mode acts on a level and not on an edge.

Note: The configuration "CCxP=CCxNP=1" (detection of both rising and falling edges) does not have any effect in gated mode because gated mode acts on a level and not on an edge.

Slave mode: Trigger mode

The counter can start in response to an event on a selected input.

In the following example, the upcounter starts in response to a rising edge on TI2 input:

1. Configure the channel 2 to detect rising edges on TI2. Configure the input filter duration (in this example, we don't need any filter, so we keep IC2F=0000). The capture prescaler is not used for triggering, so you don't need to configure it. CC2S bits are selecting the input capture source only, CC2S=01 in TIMx_CCMR1 register. Write

CC2P=1 and CC2NP=0 in TIMx_CCER register to validate the polarity (and detect low level only).

2. Configure the timer in trigger mode by writing SMS=110 in TIMx_SMCR register. Select TI2 as the input source by writing TS=110 in TIMx_SMCR register.

When a rising edge occurs on TI2, the counter starts counting on the internal clock and the TIF flag is set.

The delay between the rising edge on TI2 and the actual start of the counter is due to the resynchronization circuit on TI2 input.

Figure 264. Control circuit in trigger mode

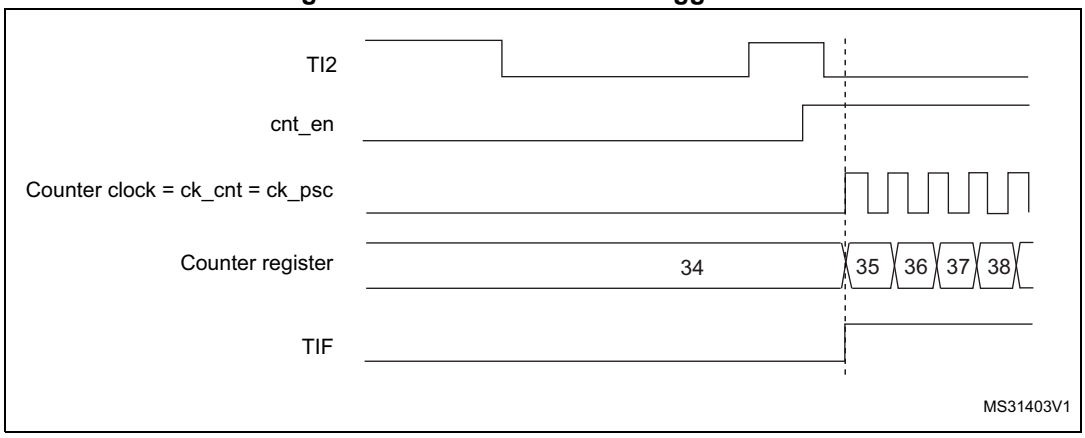

Slave mode: External Clock mode 2 + trigger mode

The external clock mode 2 can be used in addition to another slave mode (except external clock mode 1 and encoder mode). In this case, the ETR signal is used as external clock input, and another input can be selected as trigger input when operating in reset mode, gated mode or trigger mode. It is recommended not to select ETR as TRGI through the TS bits of TIMx_SMCR register.

In the following example, the upcounter is incremented at each rising edge of the ETR signal as soon as a rising edge of TI1 occurs:

1. Configure the external trigger input circuit by programming the TIMx_SMCR register as follows:
   - ETF = 0000: no filter
   - ETPS=00: prescaler disabled
   - ETP=0: detection of rising edges on ETR and ECE=1 to enable the external clock mode 2.
2. Configure the channel 1 as follows, to detect rising edges on TI:
   - IC1F=0000: no filter.
   - The capture prescaler is not used for triggering and does not need to be configured.
   - CC1S=01in TIMx_CCMR1 register to select only the input capture source
   - CC1P=0 and CC1NP=0 in TIMx_CCER register to validate the polarity (and detect rising edge only).
3. Configure the timer in trigger mode by writing SMS=110 in TIMx_SMCR register. Select TI1 as the input source by writing TS=101 in TIMx_SMCR register.

A rising edge on TI1 enables the counter and sets the TIF flag. The counter then counts on ETR rising edges.

The delay between the rising edge of the ETR signal and the actual reset of the counter is due to the resynchronization circuit on ETRP input.

Figure 265. Control circuit in external clock mode 2 + trigger mode

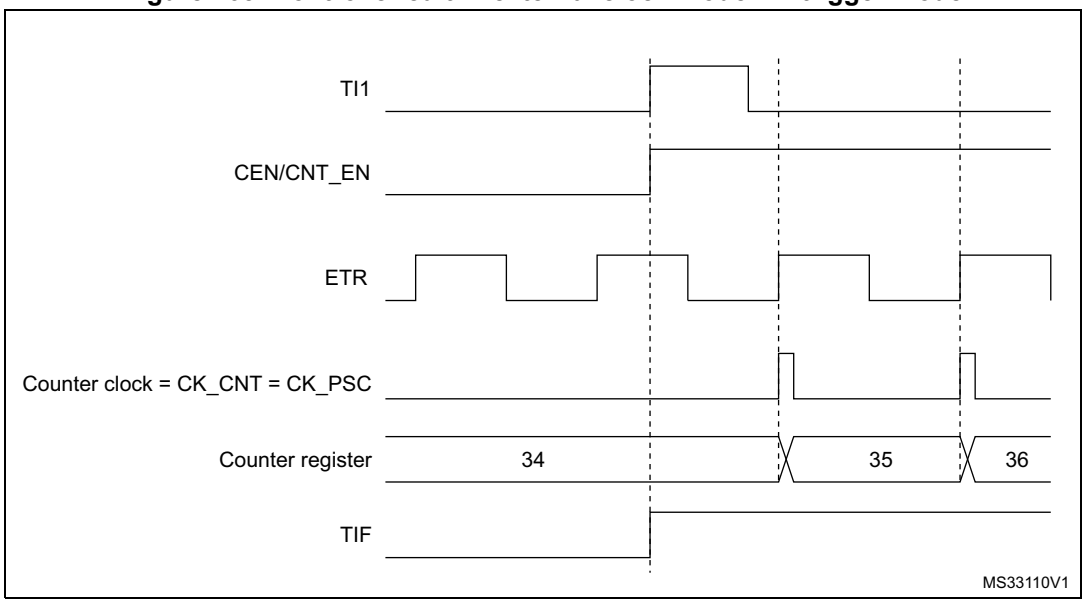

26.3.19 Timer synchronization

The TIMx timers are linked together internally for timer synchronization or chaining. When one Timer is configured in Master Mode, it can reset, start, stop or clock the counter of another Timer configured in Slave Mode.

Figure 266: Master/Slave timer example presents an overview of the trigger selection and the master mode selection blocks.

Figure 266. Master/Slave timer example

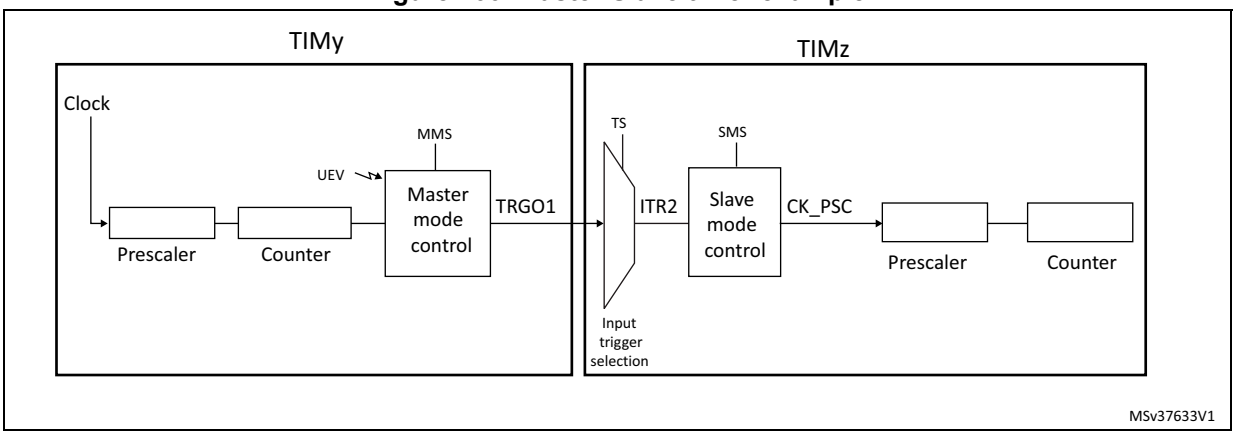

Using one timer as prescaler for another timer

For example, you can configure TIMy to act as a prescaler for TIMz. Refer to *Figure 266*. To do this:

1. Configure TIMy in master mode so that it outputs a periodic trigger signal on each update event UEV. If you write MMS=010 in the TIMy_CR2 register, a rising edge is output on TRGO each time an update event is generated.
2. To connect the TRGO output of TIMy to TIMz, TIMz must be configured in slave mode using ITR2 as internal trigger. You select this through the TS bits in the TIMz_SMCR register (writing TS=010).
3. Then you put the slave mode controller in external clock mode 1 (write SMS=111 in the TIMz_SMCR register). This causes TIMz to be clocked by the rising edge of the periodic TIMy trigger signal (which correspond to the TIMy counter overflow).
4. Finally both timers must be enabled by setting their respective CEN bits (TIMx_CR1 register).

Note: If OCx is selected on TIMy as the trigger output (MMS=1xx), its rising edge is used to clock the counter of TIMz.

Using one timer to enable another timer

In this example, we control the enable of TIMz with the output compare 1 of Timer y. Refer to *Figure 266* for connections. TIMz counts on the divided internal clock only when OC1REF of TIMy is high. Both counter clock frequencies are divided by 3 by the prescaler compared to CK_INT ($f_{CK_CNT} = f_{CK_INT}/3$).

1. Configure TIMy master mode to send its Output Compare 1 Reference (OC1REF) signal as trigger output (MMS=100 in the TIMy_CR2 register).
2. Configure the TIMy OC1REF waveform (TIMy_CCMR1 register).
3. Configure TIMz to get the input trigger from TIMy (TS=010 in the TIMz_SMCR register).
4. Configure TIMz in gated mode (SMS=101 in TIMz_SMCR register).
5. Enable TIMz by writing ‘1 in the CEN bit (TIMz_CR1 register).
6. Start TIMy by writing ‘1 in the CEN bit (TIMy_CR1 register).

Note: The counter z clock is not synchronized with counter 1, this mode only affects the TIMz counter enable signal.

Figure 267. Gating TIMz with OC1REF of TIMy

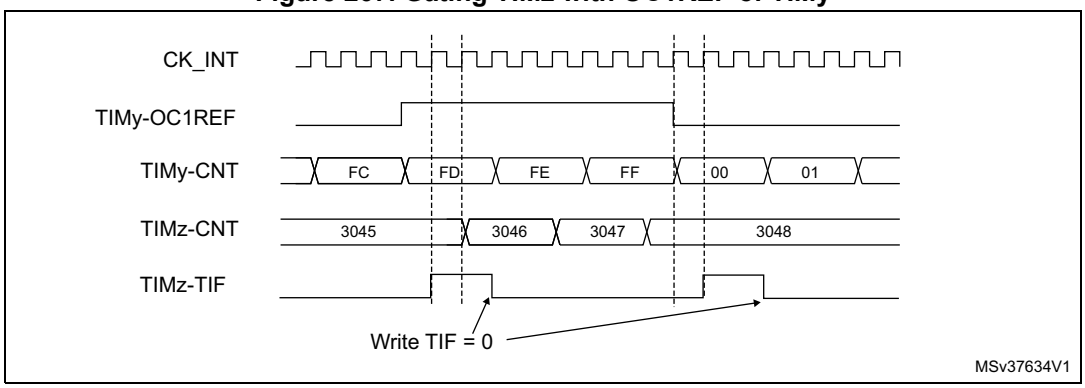

In the example in *Figure 267*, the TIMz counter and prescaler are not initialized before being started. So they start counting from their current value. It is possible to start from a given value by resetting both timers before starting TIMy. You can then write any value you want in the timer counters. The timers can easily be reset by software using the UG bit in the TIMx_EGR registers.

In the next example (refer to *Figure 268*), we synchronize TIMy and TIMz. TIMy is the master and starts from 0. TIMz is the slave and starts from 0xE7. The prescaler ratio is the same for both timers. TIMz stops when TIMy is disabled by writing ‘0 to the CEN bit in the TIMy_CR1 register:

1. Configure TIMy master mode to send its Output Compare 1 Reference (OC1REF) signal as trigger output (MMS=100 in the TIMy_CR2 register).
2. Configure the TIMy OC1REF waveform (TIMy_CCMR1 register).
3. Configure TIMz to get the input trigger from TIMy (TS=010 in the TIMz_SMCR register).
4. Configure TIMz in gated mode (SMS=101 in TIMz_SMCR register).
5. Reset TIMy by writing ‘1 in UG bit (TIMy_EGR register).
6. Reset TIMz by writing ‘1 in UG bit (TIMz_EGR register).
7. Initialize TIMz to 0xE7 by writing ‘0xE7’ in the TIMz counter (TIMz_CNTL).
8. Enable TIMz by writing ‘1 in the CEN bit (TIMz_CR1 register).
9. Start TIMy by writing ‘1 in the CEN bit (TIMy_CR1 register).
10. Stop TIMy by writing ‘0 in the CEN bit (TIMy_CR1 register).

Figure 268. Gating TIMz with Enable of TIMy

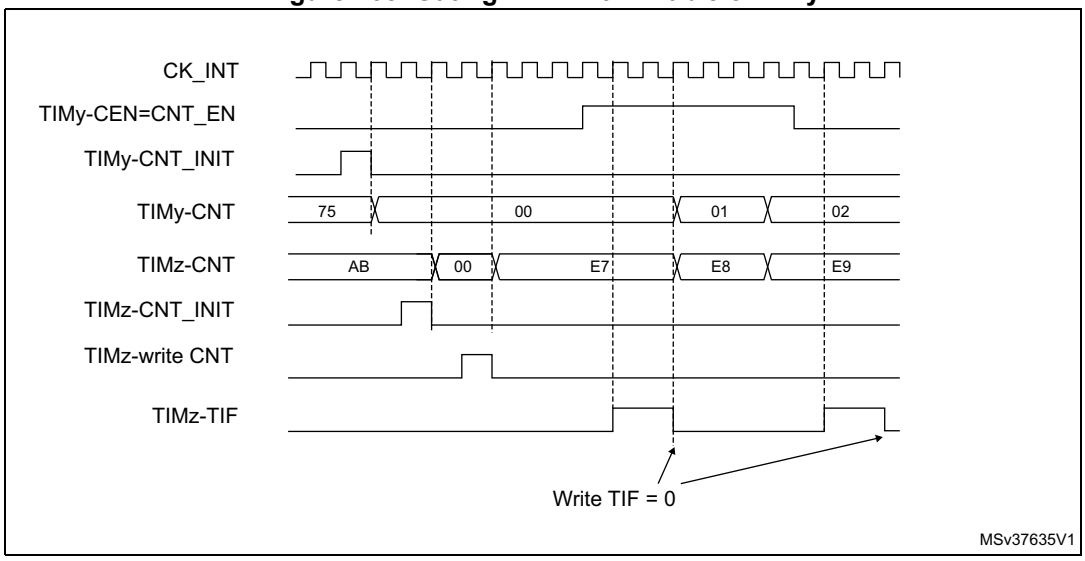

Using one timer to start another timer

In this example, we set the enable of Timer z with the update event of Timer y. Refer to *Figure 266* for connections. Timer z starts counting from its current value (which can be non-zero) on the divided internal clock as soon as the update event is generated by Timer 1. When Timer z receives the trigger signal its CEN bit is automatically set and the counter counts until we write ‘0 to the CEN bit in the TIMz_CR1 register. Both counter clock frequencies are divided by 3 by the prescaler compared to CK_INT ($f_{CK_CNT} = f_{CK_INT}/3$).

1. Configure TIMy master mode to send its Update Event (UEV) as trigger output (MMS=010 in the TIMy_CR2 register).
2. Configure the TIMy period (TIMy_ARR registers).
3. Configure TIMz to get the input trigger from TIMy (TS=010 in the TIMz_SMCR register).
4. Configure TIMz in trigger mode (SMS=110 in TIMz_SMCR register).
5. Start TIMy by writing ‘1 in the CEN bit (TIMy_CR1 register).

Figure 269. Triggering TIMz with update of TIMy

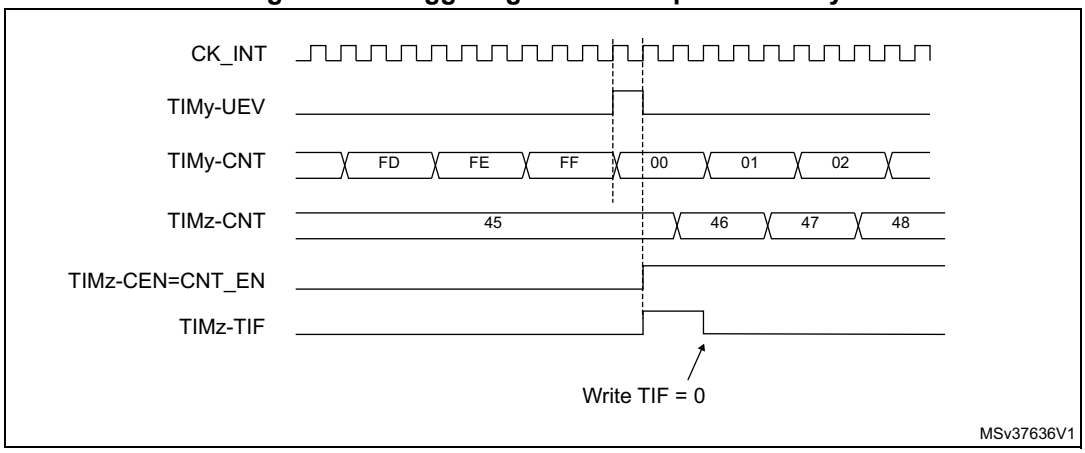

As in the previous example, you can initialize both counters before starting counting. *Figure 270* shows the behavior with the same configuration as in *Figure 269* but in trigger mode instead of gated mode (SMS=110 in the TIMz_SMCR register).

Figure 270. Triggering TIMz with Enable of TIMy

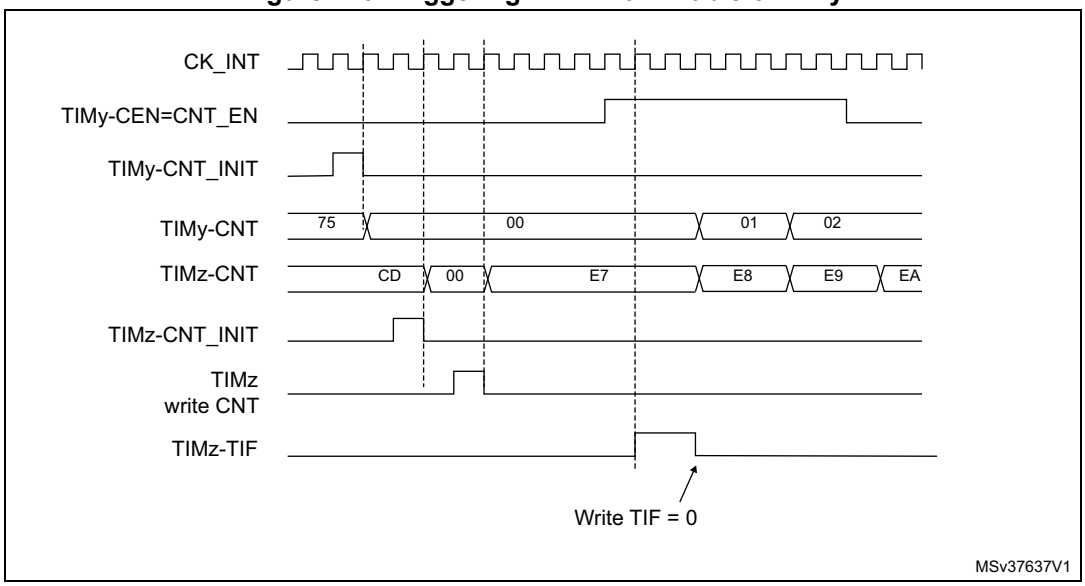

Starting 2 timers synchronously in response to an external trigger

In this example, we set the enable of TIMy when its TI1 input rises, and the enable of TIMz with the enable of TIMy. Refer to *Figure 266* for connections. To ensure the counters are

aligned, TIMy must be configured in Master/Slave mode (slave with respect to TI1, master with respect to TIMz):

1. Configure TIMy master mode to send its Enable as trigger output (MMS=001 in the TIMy_CR2 register).
2. Configure TIMy slave mode to get the input trigger from TI1 (TS=100 in the TIMy_SMCR register).
3. Configure TIMy in trigger mode (SMS=110 in the TIMy_SMCR register).
4. Configure the TIMy in Master/Slave mode by writing MSM=1 (TIMy_SMCR register).
5. Configure TIMz to get the input trigger from TIMy (TS=000 in the TIMz_SMCR register).
6. Configure TIMz in trigger mode (SMS=110 in the TIMz_SMCR register).

When a rising edge occurs on TI1 (TIMy), both counters starts counting synchronously on the internal clock and both TIF flags are set.

Note: In this example both timers are initialized before starting (by setting their respective UG bits). Both counters starts from 0, but you can easily insert an offset between them by writing any of the counter registers (TIMx_CNT). You can see that the master/slave mode insert a delay between CNT_EN and CK_PSC on TIMy.

Figure 271. Triggering TIMy and TIMz with TIMy TI1 input

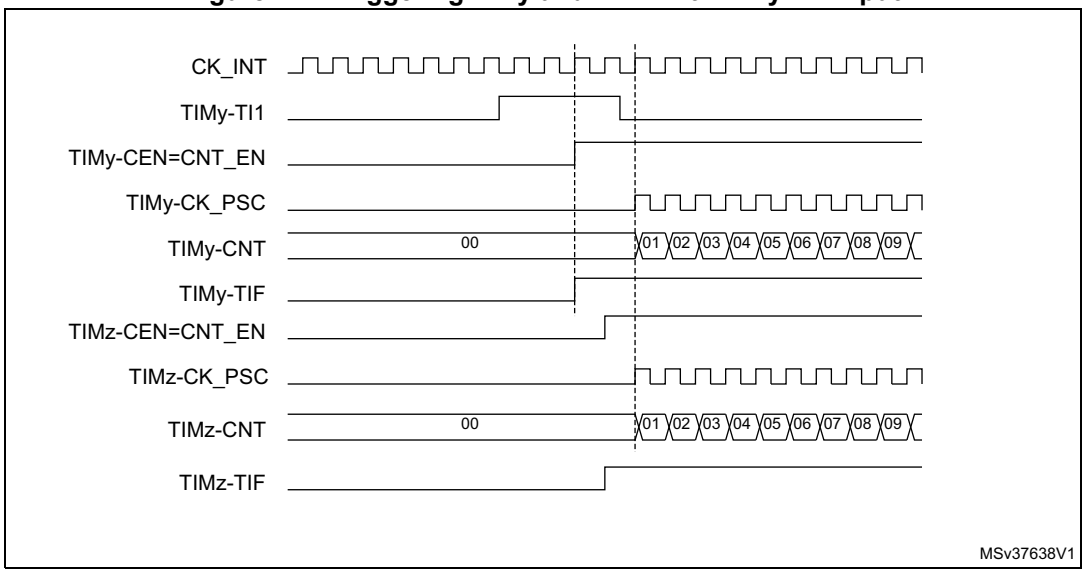

Note: The clock of the slave timer must be enabled prior to receive events from the master timer, and must not be changed on-the-fly while triggers are received from the master timer.

26.3.20 DMA burst mode

The TIMx timers have the capability to generate multiple DMA requests upon a single event. The main purpose is to be able to re-program part of the timer multiple times without software overhead, but it can also be used to read several registers in a row, at regular intervals.

The DMA controller destination is unique and must point to the virtual register TIMx_DMAR. On a given timer event, the timer launches a sequence of DMA requests (burst). Each write into the TIMx_DMAR register is actually redirected to one of the timer registers.

The DBL[4:0] bits in the TIMx_DCR register set the DMA burst length. The timer recognizes a burst transfer when a read or a write access is done to the TIMx_DMAR address), i.e. the number of transfers (either in half-words or in bytes).

The DBA[4:0] bits in the TIMx_DCR registers define the DMA base address for DMA transfers (when read/write access are done through the TIMx_DMAR address). DBA is defined as an offset starting from the address of the TIMx_CR1 register:

Example:

00000: TIMx_CR1

00001: TIMx_CR2

00010: TIMx_SMCR

As an example, the timer DMA burst feature is used to update the contents of the CCRx registers (x = 2, 3, 4) upon an update event, with the DMA transferring half words into the CCRx registers.

This is done in the following steps:

1. Configure the corresponding DMA channel as follows:
   - DMA channel peripheral address is the DMAR register address
   - DMA channel memory address is the address of the buffer in the RAM containing the data to be transferred by DMA into CCRx registers.
   - Number of data to transfer = 3 (See note below).
   - Circular mode disabled.
2. Configure the DCR register by configuring the DBA and DBL bit fields as follows: DBL = 3 transfers, DBA = 0xE.
3. Enable the TIMx update DMA request (set the UDE bit in the DIER register).
4. Enable TIMx
5. Enable the DMA channel

This example is for the case where every CCRx register has to be updated once. If every CCRx register is to be updated twice for example, the number of data to transfer should be 6. Let's take the example of a buffer in the RAM containing data1, data2, data3, data4, data5 and data6. The data is transferred to the CCRx registers as follows: on the first update DMA request, data1 is transferred to CCR2, data2 is transferred to CCR3, data3 is transferred to CCR4 and on the second update DMA request, data4 is transferred to CCR2, data5 is transferred to CCR3 and data6 is transferred to CCR4.

Note: A null value can be written to the reserved registers.

26.3.21 Debug mode

When the microcontroller enters debug mode (Cortex®-M4 core - halted), the TIMx counter either continues to work normally or stops, depending on DBG_TIMx_STOP configuration bit in DBGMCU module. For more details, refer to *Section 43.16.2: Debug support for timers, RTC, watchdog, bxCAN and I2C*.

26.4 TIM2 registers

Refer to *Section 1.1* for a list of abbreviations used in register descriptions.

The peripheral registers can be accessed by half-words (16-bit) or words (32-bit).

26.4.1 TIMx control register 1 (TIMx_CR1)

Address offset: 0x00

Reset value: 0x0000

15	14	13	12	11	10	9	8	7	6	5	4	3	2	1	0
Res.	Res.	Res.	Res.	UIF RE-MAP	Res.	CKD[1:0]		ARPE	CMS		DIR	OPM	URS	UDIS	CEN
				rw		rw	rw	rw	rw	rw	rw	rw	rw	rw	rw

Bits 15:12 Reserved, must be kept at reset value.

Bit 11 **UIFREMAP**: UIF status bit remapping

0: No remapping. UIF status bit is not copied to TIMx_CNT register bit 31.
1: Remapping enabled. UIF status bit is copied to TIMx_CNT register bit 31.

Bit 10 Reserved, must be kept at reset value.

Bits 9:8 **CKD**: Clock division

This bit-field indicates the division ratio between the timer clock (CK_INT) frequency and sampling clock used by the digital filters (ETR, TIx),

00: $t_{DTS} = t_{CK_INT}$
01: $t_{DTS} = 2 \times t_{CK_INT}$
10: $t_{DTS} = 4 \times t_{CK_INT}$
11: Reserved

Bit 7 **ARPE**: Auto-reload preload enable

0: TIMx_ARR register is not buffered
1: TIMx_ARR register is buffered

Bits 6:5 **CMS**: Center-aligned mode selection

00: Edge-aligned mode. The counter counts up or down depending on the direction bit (DIR).
01: Center-aligned mode 1. The counter counts up and down alternatively. Output compare interrupt flags of channels configured in output (CCxS=00 in TIMx_CCMRx register) are set only when the counter is counting down.
10: Center-aligned mode 2. The counter counts up and down alternatively. Output compare interrupt flags of channels configured in output (CCxS=00 in TIMx_CCMRx register) are set only when the counter is counting up.
11: Center-aligned mode 3. The counter counts up and down alternatively. Output compare interrupt flags of channels configured in output (CCxS=00 in TIMx_CCMRx register) are set both when the counter is counting up or down.

Note: It is not allowed to switch from edge-aligned mode to center-aligned mode as long as the counter is enabled (CEN=1)

Bit 4 **DIR**: Direction

0: Counter used as upcounter
1: Counter used as downcounter

Note: This bit is read only when the timer is configured in Center-aligned mode or Encoder mode.

Bit 3 **OPM**: One-pulse mode

0: Counter is not stopped at update event

1: Counter stops counting at the next update event (clearing the bit CEN)

Bit 2 **URS**: Update request source

This bit is set and cleared by software to select the UEV event sources.

0: Any of the following events generate an update interrupt or DMA request if enabled. These events can be:

- Counter overflow/underflow
- Setting the UG bit
- Update generation through the slave mode controller

1: Only counter overflow/underflow generates an update interrupt or DMA request if enabled.

Bit 1 **UDIS**: Update disable

This bit is set and cleared by software to enable/disable UEV event generation.

0: UEV enabled. The Update (UEV) event is generated by one of the following events:

- Counter overflow/underflow
- Setting the UG bit
- Update generation through the slave mode controller

Buffered registers are then loaded with their preload values.

1: UEV disabled. The Update event is not generated, shadow registers keep their value (ARR, PSC, CCRx). However the counter and the prescaler are reinitialized if the UG bit is set or if a hardware reset is received from the slave mode controller.

Bit 0 **CEN**: Counter enable

0: Counter disabled

1: Counter enabled

Note: External clock, gated mode and encoder mode can work only if the CEN bit has been previously set by software. However trigger mode can set the CEN bit automatically by hardware.

CEN is cleared automatically in one-pulse mode, when an update event occurs.

26.4.2 TIMx control register 2 (TIMx_CR2)

Address offset: 0x04

Reset value: 0x0000

15	14	13	12	11	10	9	8	7	6	5	4	3	2	1	0
Res.	Res.	Res.	Res.	Res.	Res.	Res.	Res.	TI1S	MMS[2:0]			CCDS	Res.	Res.	Res.
								rw	rw	rw	rw	rw			

Bits 15:8 Reserved, must be kept at reset value.

Bit 7 **TI1S**: TI1 selection

0: The TIMx_CH1 pin is connected to TI1 input

1: The TIMx_CH1, CH2 and CH3 pins are connected to the TI1 input (XOR combination)

See also *Section 25.3.25: Interfacing with Hall sensors on page 669*

Bits 6:4 **MMS**: Master mode selection

These bits allow to select the information to be sent in master mode to slave timers for synchronization (TRGO). The combination is as follows:

000: **Reset** - the UG bit from the TIMx_EGR register is used as trigger output (TRGO). If the reset is generated by the trigger input (slave mode controller configured in reset mode) then the signal on TRGO is delayed compared to the actual reset.

001: **Enable** - the Counter enable signal, CNT_EN, is used as trigger output (TRGO). It is useful to start several timers at the same time or to control a window in which a slave timer is enabled. The Counter Enable signal is generated by a logic OR between CEN control bit and the trigger input when configured in gated mode.

When the Counter Enable signal is controlled by the trigger input, there is a delay on TRGO, except if the master/slave mode is selected (see the MSM bit description in TIMx_SMCR register).

010: **Update** - The update event is selected as trigger output (TRGO). For instance a master timer can then be used as a prescaler for a slave timer.

011: **Compare Pulse** - The trigger output send a positive pulse when the CC1IF flag is to be set (even if it was already high), as soon as a capture or a compare match occurred. (TRGO)

100: **Compare** - OC1REF signal is used as trigger output (TRGO)

101: **Compare** - OC2REF signal is used as trigger output (TRGO)

110: **Compare** - OC3REF signal is used as trigger output (TRGO)

111: **Compare** - OC4REF signal is used as trigger output (TRGO)

Note: The clock of the slave timer or ADC must be enabled prior to receive events from the master timer, and must not be changed on-the-fly while triggers are received from the master timer.

Bit 3 **CCDS**: Capture/compare DMA selection

0: CCx DMA request sent when CCx event occurs

1: CCx DMA requests sent when update event occurs

Bits 2:0 Reserved, must be kept at reset value.

26.4.3 TIMx slave mode control register (TIMx_SMCR)

Address offset: 0x08

Reset value: 0x0000

31	30	29	28	27	26	25	24	23	22	21	20	19	18	17	16
Res.	Res.	Res.	Res.	Res.	Res.	Res.	Res.	Res.	Res.	Res.	Res.	Res.	Res.	Res.	SMS[3]
															rw

15	14	13	12	11	10	9	8	7	6	5	4	3	2	1	0
ETP	ECE	ETPS[1:0]		ETF[3:0]				MSM	TS[2:0]			OCCS	SMS[2:0]		
rw	rw	rw	rw	rw	rw	rw	rw	rw	rw	rw	rw	rw	rw	rw	rw

Bits 31:17 Reserved, must be kept at reset value.

Bit 16 **SMS[3]**: Slave mode selection - bit 3

Refer to SMS description - bits 2:0

Bit 15 **ETP**: External trigger polarity

This bit selects whether ETR or $\overline{ETR}$ is used for trigger operations

0: ETR is non-inverted, active at high level or rising edge

1: ETR is inverted, active at low level or falling edge

Bit 14 **ECE**: External clock enable

This bit enables External clock mode 2.

0: External clock mode 2 disabled

1: External clock mode 2 enabled. The counter is clocked by any active edge on the ETRF signal.

1: Setting the ECE bit has the same effect as selecting external clock mode 1 with TRGI connected to ETRF (SMS=111 and TS=111).

2: It is possible to simultaneously use external clock mode 2 with the following slave modes: reset mode, gated mode and trigger mode. Nevertheless, TRGI must not be connected to ETRF in this case (TS bits must not be 111).

3: If external clock mode 1 and external clock mode 2 are enabled at the same time, the external clock input is ETRF.

Bits 13:12 **ETPS[1:0]**: External trigger prescaler

External trigger signal ETRP frequency must be at most 1/4 of CK_INT frequency. A prescaler can be enabled to reduce ETRP frequency. It is useful when inputting fast external clocks.

00: Prescaler OFF

01: ETRP frequency divided by 2

10: ETRP frequency divided by 4

11: ETRP frequency divided by 8

Bits 11:8 **ETF[3:0]**: External trigger filter

This bit-field then defines the frequency used to sample ETRP signal and the length of the digital filter applied to ETRP. The digital filter is made of an event counter in which N consecutive events are needed to validate a transition on the output:

0000: No filter, sampling is done at f_{DTS}
0001: $f_{SAMPLING}=f_{CK_INT}$, N=2
0010: $f_{SAMPLING}=f_{CK_INT}$, N=4
0011: $f_{SAMPLING}=f_{CK_INT}$, N=8
0100: $f_{SAMPLING}=f_{DTS}/2$, N=6
0101: $f_{SAMPLING}=f_{DTS}/2$, N=8
0110: $f_{SAMPLING}=f_{DTS}/4$, N=6
0111: $f_{SAMPLING}=f_{DTS}/4$, N=8
1000: $f_{SAMPLING}=f_{DTS}/8$, N=6
1001: $f_{SAMPLING}=f_{DTS}/8$, N=8
1010: $f_{SAMPLING}=f_{DTS}/16$, N=5
1011: $f_{SAMPLING}=f_{DTS}/16$, N=6
1100: $f_{SAMPLING}=f_{DTS}/16$, N=8
1101: $f_{SAMPLING}=f_{DTS}/32$, N=5
1110: $f_{SAMPLING}=f_{DTS}/32$, N=6
1111: $f_{SAMPLING}=f_{DTS}/32$, N=8

Bit 7 **MSM**: Master/Slave mode

0: No action
1: The effect of an event on the trigger input (TRGI) is delayed to allow a perfect synchronization between the current timer and its slaves (through TRGO). It is useful if we want to synchronize several timers on a single external event.

Bits 6:4 **TS**: Trigger selection

This bit-field selects the trigger input to be used to synchronize the counter.
000: Internal Trigger 0 (ITR0)
001: Internal Trigger 1 (ITR1)
010: reserved
011: reserved
100: TI1 Edge Detector (TI1F_ED)
101: Filtered Timer Input 1 (TI1FP1)
110: Filtered Timer Input 2 (TI2FP2)
111: External Trigger input (ETRF)
See *Table 115: TIMx internal trigger connection on page 766* for more details on ITRx meaning for each Timer.

Note: These bits must be changed only when they are not used (e.g. when SMS=000) to avoid wrong edge detections at the transition.

Bit 3 **OCCS**: OCREF clear selection

This bit is used to select the OCREF clear source
0: OCREF_CLR_INT is connected to the OCREF_CLR input
1: OCREF_CLR_INT is connected to ETRF

Bits 2:0 **SMS**: Slave mode selection

When external signals are selected the active edge of the trigger signal (TRGI) is linked to the polarity selected on the external input (see Input Control register and Control Register description.
0000: Slave mode disabled - if CEN = ‘1 then the prescaler is clocked directly by the internal clock.
0001: Encoder mode 1 - Counter counts up/down on TI1FP1 edge depending on TI2FP2 level.
0010: Encoder mode 2 - Counter counts up/down on TI2FP2 edge depending on TI1FP1 level.
0011: Encoder mode 3 - Counter counts up/down on both TI1FP1 and TI2FP2 edges depending on the level of the other input.
0100: Reset Mode - Rising edge of the selected trigger input (TRGI) reinitializes the counter and generates an update of the registers.
0101: Gated Mode - The counter clock is enabled when the trigger input (TRGI) is high. The counter stops (but is not reset) as soon as the trigger becomes low. Both start and stop of the counter are controlled.
0110: Trigger Mode - The counter starts at a rising edge of the trigger TRGI (but it is not reset). Only the start of the counter is controlled.
0111: External Clock Mode 1 - Rising edges of the selected trigger (TRGI) clock the counter.
1000: Combined reset + trigger mode - Rising edge of the selected trigger input (TRGI) reinitializes the counter, generates an update of the registers and starts the counter.

Note: The gated mode must not be used if TI1F_ED is selected as the trigger input (TS=100). Indeed, TI1F_ED outputs 1 pulse for each transition on TI1F, whereas the gated mode checks the level of the trigger signal.

Note: The clock of the slave timer must be enabled prior to receive events from the master timer, and must not be changed on-the-fly while triggers are received from the master timer.

Table 115. TIMx internal trigger connection

Slave TIM	ITR0 (TS = 000)	ITR1 (TS = 001)	ITR2 (TS = 010)	ITR3 (TS = 011)
TIM2	TIM1	USB(1)(2)	Reserved	Reserved

1. Depends on the bit ITR1_RMP in TIM2_OR1 register.

2. Not available for STM32L431xx devices.

26.4.4 TIMx DMA/Interrupt enable register (TIMx_DIER)

Address offset: 0x0C

Reset value: 0x0000

15	14	13	12	11	10	9	8	7	6	5	4	3	2	1	0
Res.	TDE	Res.	CC4DE	CC3DE	CC2DE	CC1DE	UDE	Res.	TIE	Res.	CC4IE	CC3IE	CC2IE	CC1IE	UIE
	rw		rw	rw	rw	rw	rw		rw		rw	rw	rw	rw	rw

Bit 15 Reserved, must be kept at reset value.

Bit 14 **TDE**: Trigger DMA request enable
0: Trigger DMA request disabled.
1: Trigger DMA request enabled.

Bit 13 Reserved, must be kept at reset value.

Bit 12 **CC4DE**: Capture/Compare 4 DMA request enable
0: CC4 DMA request disabled.
1: CC4 DMA request enabled.

Bit 11 **CC3DE**: Capture/Compare 3 DMA request enable
0: CC3 DMA request disabled.
1: CC3 DMA request enabled.

Bit 10 **CC2DE**: Capture/Compare 2 DMA request enable
0: CC2 DMA request disabled.
1: CC2 DMA request enabled.

Bit 9 **CC1DE**: Capture/Compare 1 DMA request enable
0: CC1 DMA request disabled.
1: CC1 DMA request enabled.

Bit 8 **UDE**: Update DMA request enable
0: Update DMA request disabled.
1: Update DMA request enabled.

Bit 7 Reserved, must be kept at reset value.

Bit 6 **TIE**: Trigger interrupt enable
0: Trigger interrupt disabled.
1: Trigger interrupt enabled.

Bit 5 Reserved, must be kept at reset value.

Bit 4 **CC4IE**: Capture/Compare 4 interrupt enable
0: CC4 interrupt disabled.
1: CC4 interrupt enabled.

Bit 3 **CC3IE**: Capture/Compare 3 interrupt enable
0: CC3 interrupt disabled.
1: CC3 interrupt enabled.

Bit 2 **CC2IE**: Capture/Compare 2 interrupt enable
0: CC2 interrupt disabled.
1: CC2 interrupt enabled.

Bit 1 **CC1IE**: Capture/Compare 1 interrupt enable
0: CC1 interrupt disabled.
1: CC1 interrupt enabled.

Bit 0 **UIE**: Update interrupt enable
0: Update interrupt disabled.
1: Update interrupt enabled.

26.4.5 TIMx status register (TIMx_SR)

Address offset: 0x10

Reset value: 0x0000

15	14	13	12	11	10	9	8	7	6	5	4	3	2	1	0
Res.	Res.	Res.	CC4OF	CC3OF	CC2OF	CC1OF	Res.	Res.	TIF	Res.	CC4IF	CC3IF	CC2IF	CC1IF	UIF
			rc_w0	rc_w0	rc_w0	rc_w0			rc_w0		rc_w0	rc_w0	rc_w0	rc_w0	rc_w0

Bits 15:13 Reserved, must be kept at reset value.

Bit 12 **CC4OF**: Capture/Compare 4 overcapture flag
refer to CC1OF description

Bit 11 **CC3OF**: Capture/Compare 3 overcapture flag
refer to CC1OF description

Bit 10 **CC2OF**: Capture/compare 2 overcapture flag
refer to CC1OF description

Bit 9 **CC1OF**: Capture/Compare 1 overcapture flag
This flag is set by hardware only when the corresponding channel is configured in input capture mode. It is cleared by software by writing it to ‘0’.
0: No overcapture has been detected.
1: The counter value has been captured in TIMx_CCR1 register while CC1IF flag was already set

Bits 8:7 Reserved, must be kept at reset value.

Bit 6 **TIF**: Trigger interrupt flag
This flag is set by hardware on trigger event (active edge detected on TRGI input when the slave mode controller is enabled in all modes but gated mode. It is set when the counter starts or stops when gated mode is selected. It is cleared by software.
0: No trigger event occurred.
1: Trigger interrupt pending.

Bit 5 Reserved, must be kept at reset value.

Bit 4 **CC4IF**: Capture/Compare 4 interrupt flag
Refer to CC1IF description

Bit 3 **CC3IF**: Capture/Compare 3 interrupt flag
Refer to CC1IF description

Bit 2 **CC2IF**: Capture/Compare 2 interrupt flag

Refer to CC1IF description

Bit 1 **CC1IF**: Capture/compare 1 interrupt flag

If channel CC1 is configured as output: This flag is set by hardware when the counter matches the compare value, with some exception in center-aligned mode (refer to the CMS bits in the TIMx_CR1 register description) and in retriggerable one pulse mode. It is cleared by software.

0: No match.

1: The content of the counter TIMx_CNT has matched the content of the TIMx_CCR1 register.

If channel CC1 is configured as input: This bit is set by hardware on a capture. It is cleared by software or by reading the TIMx_CCR1 register.

0: No input capture occurred.

1: The counter value has been captured in TIMx_CCR1 register (An edge has been detected on IC1 which matches the selected polarity).

Bit 0 **UIF**: Update interrupt flag

This bit is set by hardware on an update event. It is cleared by software.

0: No update occurred

1: Update interrupt pending. This bit is set by hardware when the registers are updated:

At overflow or underflow (for TIM2) and if UDIS=0 in the TIMx_CR1 register.

When CNT is reinitialized by software using the UG bit in TIMx_EGR register, if URS=0 and UDIS=0 in the TIMx_CR1 register.

When CNT is reinitialized by a trigger event (refer to the synchro control register description), if URS=0 and UDIS=0 in the TIMx_CR1 register.

26.4.6 TIMx event generation register (TIMx_EGR)

Address offset: 0x14

Reset value: 0x0000

15	14	13	12	11	10	9	8	7	6	5	4	3	2	1	0
Res.	Res.	Res.	Res.	Res.	Res.	Res.	Res.	Res.	TG	Res.	CC4G	CC3G	CC2G	CC1G	UG
									w		w	w	w	w	w

Bits 15:7 Reserved, must be kept at reset value.

Bit 6 **TG**: Trigger generation

This bit is set by software in order to generate an event, it is automatically cleared by hardware.

0: No action

1: The TIF flag is set in TIMx_SR register. Related interrupt or DMA transfer can occur if enabled.

Bit 5 Reserved, must be kept at reset value.

Bit 4 **CC4G**: Capture/compare 4 generation

Refer to CC1G description

Bit 3 **CC3G**: Capture/compare 3 generation

Refer to CC1G description

Bit 2 **CC2G**: Capture/compare 2 generation
Refer to CC1G description

Bit 1 **CC1G**: Capture/compare 1 generation
This bit is set by software in order to generate an event, it is automatically cleared by hardware.
0: No action
1: A capture/compare event is generated on channel 1:
If channel CC1 is configured as output:
CC1IF flag is set, Corresponding interrupt or DMA request is sent if enabled.
If channel CC1 is configured as input:
The current value of the counter is captured in TIMx_CCR1 register. The CC1IF flag is set, the corresponding interrupt or DMA request is sent if enabled. The CC1OF flag is set if the CC1IF flag was already high.

Bit 0 **UG**: Update generation
This bit can be set by software, it is automatically cleared by hardware.
0: No action
1: Re-initialize the counter and generates an update of the registers. Note that the prescaler counter is cleared too (anyway the prescaler ratio is not affected). The counter is cleared if the center-aligned mode is selected or if DIR=0 (upcounting), else it takes the auto-reload value (TIMx_ARR) if DIR=1 (downcounting).

26.4.7 TIMx capture/compare mode register 1 (TIMx_CCMR1)

Address offset: 0x18

Reset value: 0x0000

The channels can be used in input (capture mode) or in output (compare mode). The direction of a channel is defined by configuring the corresponding CCxS bits. All the other bits of this register have a different function in input and in output mode. For a given bit, OCxx describes its function when the channel is configured in output, ICxx describes its function when the channel is configured in input. So you must take care that the same bit can have a different meaning for the input stage and for the output stage.

31	30	29	28	27	26	25	24	23	22	21	20	19	18	17	16
Res.	Res.	Res.	Res.	Res.	Res.	Res.	OC2M [3]	Res.	Res.	Res.	Res.	Res.	Res.	Res.	OC1M [3]
							Res.								Res.
							rw								rw

15	14	13	12	11	10	9	8	7	6	5	4	3	2	1	0
OC2CE	OC2M[2:0]			OC2PE	OC2FE	CC2S[1:0]		OC1CE	OC1M[2:0]			OC1PE	OC1FE	CC1S[1:0]	
IC2F[3:0]				IC2PSC[1:0]				IC1F[3:0]				IC1PSC[1:0]			
rw	rw	rw	rw	rw	rw	rw	rw	rw	rw	rw	rw	rw	rw	rw	rw

Output compare mode

Bits 31:25 Reserved, always read as 0.

Bit 24 **OC2M[3]**: Output Compare 2 mode - bit 3

Bits 23:17 Reserved, always read as 0.

Bit 16 **OC1M[3]**: Output Compare 1 mode - bit 3

Bit 15 **OC2CE**: Output compare 2 clear enable

Bits 14:12 **OC2M[2:0]**: Output compare 2 mode
refer to OC1M description on bits 6:4

Bit 11 **OC2PE**: Output compare 2 preload enable

Bit 10 **OC2FE**: Output compare 2 fast enable

Bits 9:8 **CC2S[1:0]**: Capture/Compare 2 selection
This bit-field defines the direction of the channel (input/output) as well as the used input.
00: CC2 channel is configured as output
01: CC2 channel is configured as input, IC2 is mapped on TI2
10: CC2 channel is configured as input, IC2 is mapped on TI1
11: CC2 channel is configured as input, IC2 is mapped on TRC. This mode is working only if an internal trigger input is selected through the TS bit (TIMx_SMCR register)

Note: CC2S bits are writable only when the channel is OFF (CC2E = 0 in TIMx_CCER).

Bit 7 **OC1CE**: Output compare 1 clear enable
0: OC1Ref is not affected by the ETRF input
1: OC1Ref is cleared as soon as a High level is detected on ETRF input

Bits 6:4 **OC1M**: Output compare 1 mode

These bits define the behavior of the output reference signal OC1REF from which OC1 and OC1N are derived. OC1REF is active high whereas OC1 and OC1N active level depends on CC1P and CC1NP bits.

0000: Frozen - The comparison between the output compare register TIMx_CCR1 and the counter TIMx_CNT has no effect on the outputs.(this mode is used to generate a timing base).

0001: Set channel 1 to active level on match. OC1REF signal is forced high when the counter TIMx_CNT matches the capture/compare register 1 (TIMx_CCR1).

0010: Set channel 1 to inactive level on match. OC1REF signal is forced low when the counter TIMx_CNT matches the capture/compare register 1 (TIMx_CCR1).

0011: Toggle - OC1REF toggles when TIMx_CNT=TIMx_CCR1.

0100: Force inactive level - OC1REF is forced low.

0101: Force active level - OC1REF is forced high.

0110: PWM mode 1 - In upcounting, channel 1 is active as long as TIMx_CNT<TIMx_CCR1 else inactive. In downcounting, channel 1 is inactive (OC1REF=‘0) as long as TIMx_CNT>TIMx_CCR1 else active (OC1REF=1).

0111: PWM mode 2 - In upcounting, channel 1 is inactive as long as TIMx_CNT<TIMx_CCR1 else active. In downcounting, channel 1 is active as long as TIMx_CNT>TIMx_CCR1 else inactive.

1000: Retriggerable OPM mode 1 - In up-counting mode, the channel is active until a trigger event is detected (on TRGI signal). Then, a comparison is performed as in PWM mode 1 and the channels becomes inactive again at the next update. In down-counting mode, the channel is inactive until a trigger event is detected (on TRGI signal). Then, a comparison is performed as in PWM mode 1 and the channels becomes inactive again at the next update.

1001: Retriggerable OPM mode 2 - In up-counting mode, the channel is inactive until a trigger event is detected (on TRGI signal). Then, a comparison is performed as in PWM mode 2 and the channels becomes inactive again at the next update. In down-counting mode, the channel is active until a trigger event is detected (on TRGI signal). Then, a comparison is performed as in PWM mode 1 and the channels becomes active again at the next update.

1010: Reserved,

1011: Reserved,

1100: Combined PWM mode 1 - OC1REF has the same behavior as in PWM mode 1. OC1REFC is the logical OR between OC1REF and OC2REF.

1101: Combined PWM mode 2 - OC1REF has the same behavior as in PWM mode 2. OC1REFC is the logical AND between OC1REF and OC2REF.

1110: Asymmetric PWM mode 1 - OC1REF has the same behavior as in PWM mode 1. OC1REFC outputs OC1REF when the counter is counting up, OC2REF when it is counting down.

1111: Asymmetric PWM mode 2 - OC1REF has the same behavior as in PWM mode 2. OC1REFC outputs OC1REF when the counter is counting up, OC2REF when it is counting down.

*Note: **1:** These bits can not be modified as long as LOCK level 3 has been programmed (LOCK bits in TIMx_BDTR register) and CC1S=00 (the channel is configured in output).*

***2:** In PWM mode, the OCREF level changes only when the result of the comparison changes or when the output compare mode switches from “frozen” mode to “PWM” mode.*

Bit 3 **OC1PE**: Output compare 1 preload enable

0: Preload register on TIMx_CCR1 disabled. TIMx_CCR1 can be written at anytime, the new value is taken in account immediately.
1: Preload register on TIMx_CCR1 enabled. Read/Write operations access the preload register. TIMx_CCR1 preload value is loaded in the active register at each update event.

*Note: **1:** These bits can not be modified as long as LOCK level 3 has been programmed (LOCK bits in TIMx_BDTR register) and CC1S=00 (the channel is configured in output).*

***2:** The PWM mode can be used without validating the preload register only in one-pulse mode (OPM bit set in TIMx_CR1 register). Else the behavior is not guaranteed.*

Bit 2 **OC1FE**: Output compare 1 fast enable

This bit is used to accelerate the effect of an event on the trigger in input on the CC output.
0: CC1 behaves normally depending on counter and CCR1 values even when the trigger is ON. The minimum delay to activate CC1 output when an edge occurs on the trigger input is 5 clock cycles.
1: An active edge on the trigger input acts like a compare match on CC1 output. Then, OC is set to the compare level independently from the result of the comparison. Delay to sample the trigger input and to activate CC1 output is reduced to 3 clock cycles. OCFE acts only if the channel is configured in PWM1 or PWM2 mode.

Bits 1:0 **CC1S**: Capture/Compare 1 selection

This bit-field defines the direction of the channel (input/output) as well as the used input.
00: CC1 channel is configured as output.
01: CC1 channel is configured as input, IC1 is mapped on TI1.
10: CC1 channel is configured as input, IC1 is mapped on TI2.
11: CC1 channel is configured as input, IC1 is mapped on TRC. This mode is working only if an internal trigger input is selected through TS bit (TIMx_SMCR register)

Note: CC1S bits are writable only when the channel is OFF (CC1E = 0 in TIMx_CCER).

Input capture mode

Bits 31:16 Reserved, always read as 0.

Bits 15:12 **IC2F**: Input capture 2 filter

Bits 11:10 **IC2PSC[1:0]**: Input capture 2 prescaler

Bits 9:8 **CC2S**: Capture/compare 2 selection

This bit-field defines the direction of the channel (input/output) as well as the used input.
00: CC2 channel is configured as output.
01: CC2 channel is configured as input, IC2 is mapped on TI2.
10: CC2 channel is configured as input, IC2 is mapped on TI1.
11: CC2 channel is configured as input, IC2 is mapped on TRC. This mode is working only if an internal trigger input is selected through TS bit (TIMx_SMCR register)

Note: CC2S bits are writable only when the channel is OFF (CC2E = 0 in TIMx_CCER).

Bits 7:4 **IC1F**: Input capture 1 filter

This bit-field defines the frequency used to sample TI1 input and the length of the digital filter applied to TI1. The digital filter is made of an event counter in which N consecutive events are needed to validate a transition on the output:

0000: No filter, sampling is done at f_{DTS}
0001: $f_{SAMPLING}=f_{CK_INT}$, N=2
0010: $f_{SAMPLING}=f_{CK_INT}$, N=4
0011: $f_{SAMPLING}=f_{CK_INT}$, N=8
0100: $f_{SAMPLING}=f_{DTS}/2$, N=6
0101: $f_{SAMPLING}=f_{DTS}/2$, N=8
0110: $f_{SAMPLING}=f_{DTS}/4$, N=6
0111: $f_{SAMPLING}=f_{DTS}/4$, N=8
1000: $f_{SAMPLING}=f_{DTS}/8$, N=6
1001: $f_{SAMPLING}=f_{DTS}/8$, N=8
1010: $f_{SAMPLING}=f_{DTS}/16$, N=5
1011: $f_{SAMPLING}=f_{DTS}/16$, N=6
1100: $f_{SAMPLING}=f_{DTS}/16$, N=8
1101: $f_{SAMPLING}=f_{DTS}/32$, N=5
1110: $f_{SAMPLING}=f_{DTS}/32$, N=6
1111: $f_{SAMPLING}=f_{DTS}/32$, N=8

Bits 3:2 **IC1PSC**: Input capture 1 prescaler

This bit-field defines the ratio of the prescaler acting on CC1 input (IC1). The prescaler is reset as soon as CC1E=0 (TIMx_CCER register).

00: no prescaler, capture is done each time an edge is detected on the capture input
01: capture is done once every 2 events
10: capture is done once every 4 events
11: capture is done once every 8 events

Bits 1:0 **CC1S**: Capture/Compare 1 selection

This bit-field defines the direction of the channel (input/output) as well as the used input.

00: CC1 channel is configured as output
01: CC1 channel is configured as input, IC1 is mapped on TI1
10: CC1 channel is configured as input, IC1 is mapped on TI2
11: CC1 channel is configured as input, IC1 is mapped on TRC. This mode is working only if an internal trigger input is selected through TS bit (TIMx_SMCR register)

Note: CC1S bits are writable only when the channel is OFF (CC1E = 0 in TIMx_CCER).

26.4.8 TIMx capture/compare mode register 2 (TIMx_CCMR2)

Address offset: 0x1C

Reset value: 0x0000

Refer to the above CCMR1 register description.

31	30	29	28	27	26	25	24	23	22	21	20	19	18	17	16
Res.	Res.	Res.	Res.	Res.	Res.	Res.	OC4M [3]	Res.	Res.	Res.	Res.	Res.	Res.	Res.	OC3M [3]
							Res.								Res.
							rw								rw

15	14	13	12	11	10	9	8	7	6	5	4	3	2	1	0
OC4CE	OC4M[2:0]			OC4PE	OC4FE	CC4S[1:0]		OC3CE	OC3M[2:0]			OC3PE	OC3FE	CC3S[1:0]	
IC4F[3:0]				IC4PSC[1:0]				IC3F[3:0]				IC3PSC[1:0]			
rw	rw	rw	rw	rw	rw	rw	rw	rw	rw	rw	rw	rw	rw	rw	rw

Output compare mode

Bits 31:25 Reserved, always read as 0.

Bit 24 **OC4M[3]**: Output Compare 2 mode - bit 3

Bits 23:17 Reserved, always read as 0.

Bit 16 **OC3M[3]**: Output Compare 1 mode - bit 3

Bit 15 **OC4CE**: Output compare 4 clear enable

Bits 14:12 **OC4M**: Output compare 4 mode
Refer to OC1M description (bits 6:4 in TIMx_CCMR1 register)

Bit 11 **OC4PE**: Output compare 4 preload enable

Bit 10 **OC4FE**: Output compare 4 fast enable

Bits 9:8 **CC4S**: Capture/Compare 4 selection
This bit-field defines the direction of the channel (input/output) as well as the used input.
00: CC4 channel is configured as output
01: CC4 channel is configured as input, IC4 is mapped on TI4
10: CC4 channel is configured as input, IC4 is mapped on TI3
11: CC4 channel is configured as input, IC4 is mapped on TRC. This mode is working only if an internal trigger input is selected through TS bit (TIMx_SMCR register)
Note: CC4S bits are writable only when the channel is OFF (CC4E = 0 in TIMx_CCER).

Bit 7 **OC3CE**: Output compare 3 clear enable

Bits 6:4 **OC3M**: Output compare 3 mode
Refer to OC1M description (bits 6:4 in TIMx_CCMR1 register)

Bit 3 **OC3PE**: Output compare 3 preload enable

Bit 2 **OC3FE**: Output compare 3 fast enable

Bits 1:0 **CC3S**: Capture/Compare 3 selection
This bit-field defines the direction of the channel (input/output) as well as the used input.
00: CC3 channel is configured as output
01: CC3 channel is configured as input, IC3 is mapped on TI3
10: CC3 channel is configured as input, IC3 is mapped on TI4
11: CC3 channel is configured as input, IC3 is mapped on TRC. This mode is working only if an internal trigger input is selected through TS bit (TIMx_SMCR register)
Note: CC3S bits are writable only when the channel is OFF (CC3E = 0 in TIMx_CCER).

Input capture mode

Bits 31:16 Reserved, always read as 0.

Bits 15:12 **IC4F**: Input capture 4 filter

Bits 11:10 **IC4PSC**: Input capture 4 prescaler

Bits 9:8 **CC4S**: Capture/Compare 4 selection
This bit-field defines the direction of the channel (input/output) as well as the used input.
00: CC4 channel is configured as output
01: CC4 channel is configured as input, IC4 is mapped on TI4
10: CC4 channel is configured as input, IC4 is mapped on TI3
11: CC4 channel is configured as input, IC4 is mapped on TRC. This mode is working only if an internal trigger input is selected through TS bit (TIMx_SMCR register)
Note: CC4S bits are writable only when the channel is OFF (CC4E = 0 in TIMx_CCER).

Bits 7:4 **IC3F**: Input capture 3 filter

Bits 3:2 **IC3PSC**: Input capture 3 prescaler

Bits 1:0 **CC3S**: Capture/Compare 3 selection

This bit-field defines the direction of the channel (input/output) as well as the used input.
00: CC3 channel is configured as output
01: CC3 channel is configured as input, IC3 is mapped on TI3
10: CC3 channel is configured as input, IC3 is mapped on TI4
11: CC3 channel is configured as input, IC3 is mapped on TRC. This mode is working only if an internal trigger input is selected through TS bit (TIMx_SMCR register)

Note: CC3S bits are writable only when the channel is OFF (CC3E = 0 in TIMx_CCER).

26.4.9 TIMx capture/compare enable register (TIMx_CCER)

Address offset: 0x20

Reset value: 0x0000

15	14	13	12	11	10	9	8	7	6	5	4	3	2	1	0
CC4NP	Res.	CC4P	CC4E	CC3NP	Res.	CC3P	CC3E	CC2NP	Res.	CC2P	CC2E	CC1NP	Res.	CC1P	CC1E
rw		rw	rw	rw		rw	rw	rw		rw	rw	rw		rw	rw

Bit 15 **CC4NP**: *Capture/Compare 4 output Polarity.*
Refer to CC1NP description

Bit 14 Reserved, must be kept at reset value.

Bit 13 **CC4P**: *Capture/Compare 4 output Polarity.*
Refer to CC1P description

Bit 12 **CC4E**: *Capture/Compare 4 output enable.*
refer to CC1E description

Bit 11 **CC3NP**: *Capture/Compare 3 output Polarity.*
Refer to CC1NP description

Bit 10 Reserved, must be kept at reset value.

Bit 9 **CC3P**: *Capture/Compare 3 output Polarity.*
Refer to CC1P description

Bit 8 **CC3E**: *Capture/Compare 3 output enable.*
Refer to CC1E description

Bit 7 **CC2NP**: *Capture/Compare 2 output Polarity.*
Refer to CC1NP description

Bit 6 Reserved, must be kept at reset value.

Bit 5 **CC2P**: *Capture/Compare 2 output Polarity.*
refer to CC1P description

Bit 4 **CC2E**: *Capture/Compare 2 output enable.*
Refer to CC1E description

Bit 3 **CC1NP**: *Capture/Compare 1 output Polarity.*
CC1 channel configured as output: CC1NP must be kept cleared in this case.
CC1 channel configured as input: This bit is used in conjunction with CC1P to define TI1FP1/TI2FP1 polarity. refer to CC1P description.

Bit 2 Reserved, must be kept at reset value.

Bit 1 **CC1P**: *Capture/Compare 1 output Polarity.*

CC1 channel configured as output:
0: OC1 active high
1: OC1 active low

CC1 channel configured as input: CC1NP/CC1P bits select TI1FP1 and TI2FP1 polarity for trigger or capture operations.
00: noninverted/rising edge
Circuit is sensitive to TIxFP1 rising edge (capture, trigger in reset, external clock or trigger mode), TIxFP1 is not inverted (trigger in gated mode, encoder mode).
01: inverted/falling edge
Circuit is sensitive to TIxFP1 falling edge (capture, trigger in reset, external clock or trigger mode), TIxFP1 is inverted (trigger in gated mode, encoder mode).
10: reserved, do not use this configuration.
11: noninverted/both edges
Circuit is sensitive to both TIxFP1 rising and falling edges (capture, trigger in reset, external clock or trigger mode), TIxFP1 is not inverted (trigger in gated mode). This configuration must not be used for encoder mode.

Bit 0 **CC1E**: *Capture/Compare 1 output enable.*

CC1 channel configured as output:
0: Off - OC1 is not active
1: On - OC1 signal is output on the corresponding output pin

CC1 channel configured as input: This bit determines if a capture of the counter value can actually be done into the input capture/compare register 1 (TIMx_CCR1) or not.
0: Capture disabled
1: Capture enabled

Table 116. Output control bit for standard OCx channels

CCxE bit	OCx output state
0	Output Disabled (OCx=0, OCx_EN=0)
1	OCx=OCxREF + Polarity, OCx_EN=1

Note: The state of the external IO pins connected to the standard OCx channels depends on the OCx channel state and the GPIO and AFIO registers.

26.4.10 TIMx counter (TIMx_CNT)

Address offset: 0x24

Reset value: 0x0000

31	30	29	28	27	26	25	24	23	22	21	20	19	18	17	16
CNT[31] or UIFCPY	CNT[30:16] (depending on timers)														
rw or r	rw	rw	rw	rw	rw	rw	rw	rw	rw	rw	rw	rw	rw	rw	rw
15	14	13	12	11	10	9	8	7	6	5	4	3	2	1	0
CNT[15:0]															
rw	rw	rw	rw	rw	rw	rw	rw	rw	rw	rw	rw	rw	rw	rw	rw

Bit 31 Value depends on IUFREMAP in TIMx_CR1.

If UIFREMAP = 0

CNT[31]: Most significant bit of counter value

Reserved on other timers

If UIFREMAP = 1

UIFCPY: UIF Copy

This bit is a read-only copy of the UIF bit of the TIMx_ISR register

Bits 30:16 **CNT[30:16]**: Most significant part counter value (on TIM2)

Bits 15:0 **CNT[15:0]**: Least significant part of counter value

26.4.11 TIMx prescaler (TIMx_PSC)

Address offset: 0x28

Reset value: 0x0000

15	14	13	12	11	10	9	8	7	6	5	4	3	2	1	0
PSC[15:0]															
rw	rw	rw	rw	rw	rw	rw	rw	rw	rw	rw	rw	rw	rw	rw	rw

Bits 15:0 **PSC[15:0]**: Prescaler value

The counter clock frequency CK_CNT is equal to f_{CK_PSC} / (PSC[15:0] + 1).

PSC contains the value to be loaded in the active prescaler register at each update event (including when the counter is cleared through UG bit of TIMx_EGR register or through trigger controller when configured in “reset mode”).

26.4.12 TIMx auto-reload register (TIMx_ARR)

Address offset: 0x2C

Reset value: 0xFFFF FFFF

31	30	29	28	27	26	25	24	23	22	21	20	19	18	17	16
ARR[31:16] (depending on timers)															
rw	rw	rw	rw	rw	rw	rw	rw	rw	rw	rw	rw	rw	rw	rw	rw
15	14	13	12	11	10	9	8	7	6	5	4	3	2	1	0
ARR[15:0]															
rw	rw	rw	rw	rw	rw	rw	rw	rw	rw	rw	rw	rw	rw	rw	rw

Bits 31:16 **ARR[31:16]**: High auto-reload value

Bits 15:0 **ARR[15:0]**: Low Auto-reload Prescaler value

ARR is the value to be loaded in the actual auto-reload register.

Refer to the *Section 26.3.1: Time-base unit on page 718* for more details about ARR update and behavior.

The counter is blocked while the auto-reload value is null.

26.4.13 TIMx capture/compare register 1 (TIMx_CCR1)

Address offset: 0x34

Reset value: 0x0000

31	30	29	28	27	26	25	24	23	22	21	20	19	18	17	16
CCR1[31:16] (depending on timers)															
rw	rw	rw	rw	rw	rw	rw	rw	rw	rw	rw	rw	rw	rw	rw	rw
15	14	13	12	11	10	9	8	7	6	5	4	3	2	1	0
CCR1[15:0]															
rw	rw	rw	rw	rw	rw	rw	rw	rw	rw	rw	rw	rw	rw	rw	rw

Bits 31:16 **CCR1[31:16]**: High Capture/Compare 1 value

Bits 15:0 **CCR1[15:0]**: Low Capture/Compare 1 value

If channel CC1 is configured as output:
CCR1 is the value to be loaded in the actual capture/compare 1 register (preload value).
It is loaded permanently if the preload feature is not selected in the TIMx_CCMR1 register (bit OC1PE). Else the preload value is copied in the active capture/compare 1 register when an update event occurs.
The active capture/compare register contains the value to be compared to the counter TIMx_CNT and signaled on OC1 output.

If channel CC1is configured as input:
CCR1 is the counter value transferred by the last input capture 1 event (IC1).

26.4.14 TIMx capture/compare register 2 (TIMx_CCR2)

Address offset: 0x38

Reset value: 0x00000000

31	30	29	28	27	26	25	24	23	22	21	20	19	18	17	16
CCR2[31:16] (depending on timers)															
rw	rw	rw	rw	rw	rw	rw	rw	rw	rw	rw	rw	rw	rw	rw	rw
15	14	13	12	11	10	9	8	7	6	5	4	3	2	1	0
CCR2[15:0]															
rw	rw	rw	rw	rw	rw	rw	rw	rw	rw	rw	rw	rw	rw	rw	rw

Bits 31:16 **CCR2[31:16]**: High Capture/Compare 2 value

Bits 15:0 **CCR2[15:0]**: Low Capture/Compare 2 value

If channel CC2 is configured as output:
CCR2 is the value to be loaded in the actual capture/compare 2 register (preload value).
It is loaded permanently if the preload feature is not selected in the TIMx_CCMR1 register (bit OC2PE). Else the preload value is copied in the active capture/compare 2 register when an update event occurs.
The active capture/compare register contains the value to be compared to the counter TIMx_CNT and signalled on OC2 output.
If channel CC2 is configured as input:
CCR2 is the counter value transferred by the last input capture 2 event (IC2).

26.4.15 TIMx capture/compare register 3 (TIMx_CCR3)

Address offset: 0x3C

Reset value: 0x0000

31	30	29	28	27	26	25	24	23	22	21	20	19	18	17	16
CCR3[31:16] (depending on timers)															
rw	rw	rw	rw	rw	rw	rw	rw	rw	rw	rw	rw	rw	rw	rw	rw
15	14	13	12	11	10	9	8	7	6	5	4	3	2	1	0
CCR3[15:0]															
rw	rw	rw	rw	rw	rw	rw	rw	rw	rw	rw	rw	rw	rw	rw	rw

Bits 31:16 **CCR3[31:16]**: High Capture/Compare 3 value

Bits 15:0 **CCR3[15:0]**: Low Capture/Compare value

If channel CC3 is configured as output:
CCR3 is the value to be loaded in the actual capture/compare 3 register (preload value).
It is loaded permanently if the preload feature is not selected in the TIMx_CCMR2 register (bit OC3PE). Else the preload value is copied in the active capture/compare 3 register when an update event occurs.
The active capture/compare register contains the value to be compared to the counter TIMx_CNT and signalled on OC3 output.
If channel CC3is configured as input:
CCR3 is the counter value transferred by the last input capture 3 event (IC3).

26.4.16 TIMx capture/compare register 4 (TIMx_CCR4)

Address offset: 0x40

Reset value: 0x0000

31	30	29	28	27	26	25	24	23	22	21	20	19	18	17	16
CCR4[31:16] (depending on timers)															
rw	rw	rw	rw	rw	rw	rw	rw	rw	rw	rw	rw	rw	rw	rw	rw
15	14	13	12	11	10	9	8	7	6	5	4	3	2	1	0
CCR4[15:0]															
rw	rw	rw	rw	rw	rw	rw	rw	rw	rw	rw	rw	rw	rw	rw	rw

Bits 31:16 **CCR4[31:16]**: High Capture/Compare 4 value

Bits 15:0 **CCR4[15:0]**: Low Capture/Compare value

1. if CC4 channel is configured as output (CC4S bits):
   CCR4 is the value to be loaded in the actual capture/compare 4 register (preload value).
   It is loaded permanently if the preload feature is not selected in the TIMx_CCMR2 register (bit OC4PE). Else the preload value is copied in the active capture/compare 4 register when an update event occurs.
   The active capture/compare register contains the value to be compared to the counter TIMx_CNT and signalled on OC4 output.
2. if CC4 channel is configured as input (CC4S bits in TIMx_CCMR4 register):
   CCR4 is the counter value transferred by the last input capture 4 event (IC4).

26.4.17 TIMx DMA control register (TIMx_DCR)

Address offset: 0x48

Reset value: 0x0000

15	14	13	12	11	10	9	8	7	6	5	4	3	2	1	0
Res.	Res.	Res.	DBL[4:0]					Res.	Res.	Res.	DBA[4:0]				
			rw	rw	rw	rw	rw				rw	rw	rw	rw	rw

Bits 15:13 Reserved, must be kept at reset value.

Bits 12:8 **DBL[4:0]**: DMA burst length

This 5-bit vector defines the number of DMA transfers (the timer recognizes a burst transfer when a read or a write access is done to the TIMx_DMAR address).
00000: 1 transfer,
00001: 2 transfers,
00010: 3 transfers,
...
10001: 18 transfers.

Bits 7:5 Reserved, must be kept at reset value.

Bits 4:0 **DBA[4:0]**: DMA base address

This 5-bit vector defines the base-address for DMA transfers (when read/write access are done through the TIMx_DMAR address). DBA is defined as an offset starting from the address of the TIMx_CR1 register.
Example:
00000: TIMx_CR1
00001: TIMx_CR2
00010: TIMx_SMCR
...
Example: Let us consider the following transfer: DBL = 7 transfers & DBA = TIMx_CR1. In this case the transfer is done to/from 7 registers starting from the TIMx_CR1 address.

26.4.18 TIMx DMA address for full transfer (TIMx_DMAR)

Address offset: 0x4C

Reset value: 0x0000

15	14	13	12	11	10	9	8	7	6	5	4	3	2	1	0
DMAB[15:0]															
rw	rw	rw	rw	rw	rw	rw	rw	rw	rw	rw	rw	rw	rw	rw	rw

Bits 15:0 **DMAB[15:0]**: DMA register for burst accesses

A read or write operation to the DMAR register accesses the register located at the address

(TIMx_CR1 address) + (DBA + DMA index) x 4

where TIMx_CR1 address is the address of the control register 1, DBA is the DMA base address configured in TIMx_DCR register, DMA index is automatically controlled by the DMA transfer, and ranges from 0 to DBL (DBL configured in TIMx_DCR).

26.4.19 TIM2 option register 1 (TIM2_OR1)

Address offset: 0x50

Reset value: 0x0000

31	30	29	28	27	26	25	24	23	22	21	20	19	18	17	16
Res.	Res.	Res.	Res.	Res.	Res.	Res.	Res.	Res.	Res.	Res.	Res.	Res.	Res.	Res.	Res.

15	14	13	12	11	10	9	8	7	6	5	4	3	2	1	0
Res.	Res.	Res.	Res.	Res.	Res.	Res.	Res.	Res.	Res.	Res.	Res.	TI4_RMP[1:0]		ETR1_ RMP	ITR1_ RMP
												rw	rw	rw	rw

Bits 31:4 Reserved, must be kept at reset value.

Bits 3:2 **TI4_RMP[1:0]**: Input Capture 4 remap

00: TIM2 input capture 4 is connected to I/O
01: TIM2 input capture 4 is connected to COMP1_OUT
10: TIM2 input capture 4 is connected to COMP2_OUT
11: TIM2 input capture 4 is connected to logical OR between COMP1_OUT and COMP2_OUT

Bit 1 **ETR1_RMP**: External trigger remap

0: TIM2_ETR is connected to I/O
1: TIM2_ETR is connected to LSE

Bit 0 **ITR1_RMP**: Internal trigger 1 remap

0: No internal Trigger on TIM2_ITR1
1: TIM2_ITR1 is connected to USB[(1)] SOF

1. Not available for STM32L431xx devices.

26.4.20 TIM2 option register 2 (TIM2_OR2)

Address offset: 0x60

Reset value: 0x0000

31	30	29	28	27	26	25	24	23	22	21	20	19	18	17	16
Res.	Res.	Res.	Res.	Res.	Res.	Res.	Res.	Res.	Res.	Res.	Res.	Res.	Res.	Res.	ETR SEL2
															rw

15	14	13	12	11	10	9	8	7	6	5	4	3	2	1	0
ETRSEL[1:0]		Res.	Res.	Res.	Res.	Res.	Res.	Res.	Res.	Res.	Res.	Res.	Res.	Res.	Res.
rw	rw														

Bits 31:17 Reserved, must be kept at reset value.

Bits 16:14 **ETRSEL[2:0]**: ETR source selection

These bits select the ETR input source.

000: TIM2_ETR source is selected with the ETR1_RMP bitfield in TIM2_OR1 register

001: COMP1 output connected to ETR input

010: COMP2 output connected to ETR input

Other: reserved

Note: These bits can not be modified as long as LOCK level 1 has been programmed (LOCK bits in TIMx_BDTR register).

Bits 13:0 Reserved, must be kept at reset value.

26.4.21 TIMx register map

TIMx registers are mapped as described in the table below:

Table 117. TIM2 register map and reset values

Offset	Register	31	30	29	28	27	26	25	24	23	22	21	20	19	18	17	16	15	14	13	12	11	10	9	8	7	6	5	4	3	2	1	0
0x00	**TIMx_CR1**	Res	Res	Res	Res	Res	Res	Res	Res	Res	Res	Res	Res	Res	Res	Res	Res	Res	Res	Res	Res	UIFREMAP	Res	CKD [1:0]		ARPE	CMS [1:0]		DIR	OPM	URS	UDIS	CEN
	Reset value																							0	0	0	0	0	0	0	0	0	0
0x04	**TIMx_CR2**	Res	Res	Res	Res	Res	Res	Res	Res	Res	Res	Res	Res	Res	Res	Res	Res	Res	Res	Res	Res	Res	Res	Res	Res	TI1S	MMS[2:0]			CCDS	Res	Res	Res
	Reset value																									0	0	0	0	0			
0x08	**TIMx_SMCR**	Res	Res	Res	Res	Res	Res	Res	Res	Res	Res	Res	Res	Res	Res	Res	SMS[3]	ETP	ECE	ETPS [1:0]		ETF[3:0]				MSM	TS[2:0]			OCCS	SMS[2:0]		
	Reset value																0	0	0	0	0	0	0	0	0	0	0	0	0	0	0	0	0
0x0C	**TIMx_DIER**	Res	Res	Res	Res	Res	Res	Res	Res	Res	Res	Res	Res	Res	Res	Res	Res	Res	TDE	COMDE	CC4DE	CC3DE	CC2DE	CC1DE	UDE	Res	TIE	Res	CC4IE	CC3IE	CC2IE	CC1IE	UIE
	Reset value																		0	0	0	0	0	0	0		0		0	0	0	0	0
0x10	**TIMx_SR**	Res	Res	Res	Res	Res	Res	Res	Res	Res	Res	Res	Res	Res	Res	Res	Res	Res	Res	Res	CC4OF	CC3OF	CC2OF	CC1OF	Res	Res	TIF	Res	CC4IF	CC3IF	CC2IF	CC1IF	UIF
	Reset value																				0	0	0	0			0		0	0	0	0	0
0x14	**TIMx_EGR**	Res	Res	Res	Res	Res	Res	Res	Res	Res	Res	Res	Res	Res	Res	Res	Res	Res	Res	Res	Res	Res	Res	Res	Res	Res	TG	Res	CC4G	CC3G	CC2G	CC1G	UG
	Reset value																										0		0	0	0	0	0
0x18	**TIMx_CCMR1** Output Compare mode	Res	Res	Res	Res	Res	Res	Res	OC2M[3]	Res	Res	Res	Res	Res	Res	Res	OC1M[3]	OC2CE	OC2M [2:0]			OC2PE	OC2FE	CC2S [1:0]		OC1CE	OC1M [2:0]			OC1PE	OC1FE	CC1S [1:0]	
	Reset value								0								0	0	0	0	0	0	0	0	0	0	0	0	0	0	0	0	0
	TIMx_CCMR1 Input Capture mode	Res	Res	Res	Res	Res	Res	Res	Res	Res	Res	Res	Res	Res	Res	Res	Res	IC2F[3:0]				IC2 PSC [1:0]		CC2S [1:0]		IC1F[3:0]				IC1 PSC [1:0]	CC1S [1:0]		
	Reset value																	0	0	0	0	0	0	0	0	0	0	0	0	0	0	0	0

Table 117. TIM2 register map and reset values (continued)

Offset	Register	31	30	29	28	27	26	25	24	23	22	21	20	19	18	17	16	15	14	13	12	11	10	9	8	7	6	5	4	3	2	1	0
0x1C	**TIMx_CCMR2** Output Compare mode	Res	Res	Res	Res	Res	Res	Res	OC4M[3]	Res	Res	Res	Res	Res	Res	Res	OC3M[3]	O24CE	OC4M [2:0]			OC4PE	OC4FE	CC4S [1:0]		OC3CE	OC3M [2:0]			OC3PE	OC3FE	CC3S [1:0]	
	Reset value								0								0	0	0	0	0	0	0	0	0	0	0	0	0	0	0	0	0
	TIMx_CCMR2 Input Capture mode	Res	Res	Res	Res	Res	Res	Res	Res	Res	Res	Res	Res	Res	Res	Res	Res	IC4F[3:0]				IC4 PSC [1:0]		CC4S [1:0]		IC3F[3:0]				IC3 PSC [1:0]		CC3S [1:0]	
	Reset value																	0	0	0	0	0	0	0	0	0	0	0	0	0	0	0	0
0x20	**TIMx_CCER**	Res	Res	Res	Res	Res	Res	Res	Res	Res	Res	Res	Res	Res	Res	Res	Res	CC4NP	Res	CC4P	CC4E	CC3NP	Res	CC3P	CC3E	CC2NP	Res	CC2P	CC2E	CC1NP	Res	CC1P	CC1E
	Reset value																	0		0	0	0		0	0	0		0	0	0		0	0
0x24	**TIMx_CNT**	CNT[31] or UIFCPY	CNT[30:16]															CNT[15:0]															
	Reset value	0	0	0	0	0	0	0	0	0	0	0	0	0	0	0	0	0	0	0	0	0	0	0	0	0	0	0	0	0	0	0	0
0x28	**TIMx_PSC**	Res	Res	Res	Res	Res	Res	Res	Res	Res	Res	Res	Res	Res	Res	Res	Res	PSC[15:0]															
	Reset value																	0	0	0	0	0	0	0	0	0	0	0	0	0	0	0	0
0x2C	**TIMx_ARR**	ARR[31:16]																ARR[15:0]															
	Reset value	1	1	1	1	1	1	1	1	1	1	1	1	1	1	1	1	1	1	1	1	1	1	1	1	1	1	1	1	1	1	1	1
0x30	Reserved																																
0x34	**TIMx_CCR1**	CCR1[31:16]																CCR1[15:0]															
	Reset value	0	0	0	0	0	0	0	0	0	0	0	0	0	0	0	0	0	0	0	0	0	0	0	0	0	0	0	0	0	0	0	0
0x38	**TIMx_CCR2**	CCR2[31:16]																CCR2[15:0]															
	Reset value	0	0	0	0	0	0	0	0	0	0	0	0	0	0	0	0	0	0	0	0	0	0	0	0	0	0	0	0	0	0	0	0
0x3C	**TIMx_CCR3**	CCR3[31:16]																CCR3[15:0]															
	Reset value	0	0	0	0	0	0	0	0	0	0	0	0	0	0	0	0	0	0	0	0	0	0	0	0	0	0	0	0	0	0	0	0
0x40	**TIMx_CCR4**	CCR4[31:16]																CCR4[15:0]															
	Reset value	0	0	0	0	0	0	0	0	0	0	0	0	0	0	0	0	0	0	0	0	0	0	0	0	0	0	0	0	0	0	0	0
0x44	Reserved																																
0x48	**TIMx_DCR**	Res	Res	Res	Res	Res	Res	Res	Res	Res	Res	Res	Res	Res	Res	Res	Res	Res	Res	Res	DBL[4:0]					Res	Res	Res	DBA[4:0]				
	Reset value																				0	0	0	0	0				0	0	0	0	0

Table 117. TIM2 register map and reset values (continued)

Offset	Register	31	30	29	28	27	26	25	24	23	22	21	20	19	18	17	16	15	14	13	12	11	10	9	8	7	6	5	4	3	2	1	0
0x4C	**TIMx_DMAR**	Res	Res	Res	Res	Res	Res	Res	Res	Res	Res	Res	Res	Res	Res	Res	Res	DMAB[15:0]															
	Reset value																	0	0	0	0	0	0	0	0	0	0	0	0	0	0	0	0
0x50	**TIM2_OR1**	Res	Res	Res	Res	Res	Res	Res	Res	Res	Res	Res	Res	Res	Res	Res	Res	Res	Res	Res	Res	Res	Res	Res	Res	Res	Res	Res	Res	TI4_RMP[1:0]		ETR1_RMP	ITR1_RMP
	Reset value																													0	0	0	0
0x60	**TIM2_OR2**	Res	Res	Res	Res	Res	Res	Res	Res	Res	Res	Res	Res	Res	Res	Res	ETRSEL [2:0]			Res	Res	Res	Res	Res	Res	Res	Res	Res	Res	Res	Res	Res	Res
	Reset value																0	0	0														

Refer to *Section 2.2.2: Memory map and register boundary addresses* for the register boundary addresses.

27 General-purpose timers (TIM15/TIM16)

27.1 TIM15/TIM16 introduction

The TIM15/TIM16 timers consist of a 16-bit auto-reload counter driven by a programmable prescaler.

They may be used for a variety of purposes, including measuring the pulse lengths of input signals (input capture) or generating output waveforms (output compare, PWM, complementary PWM with dead-time insertion).

Pulse lengths and waveform periods can be modulated from a few microseconds to several milliseconds using the timer prescaler and the RCC clock controller prescalers.

The TIM15/TIM16 timers are completely independent, and do not share any resources. They can be synchronized together as described in *Section 27.4.20: Timer synchronization (TIM15)*.

27.2 TIM15 main features

TIM15 includes the following features:

- 16-bit auto-reload upcounter
- 16-bit programmable prescaler used to divide (also “on the fly”) the counter clock frequency by any factor between 1 and 65535
- Up to 2 independent channels for:
  - Input capture
  - Output compare
  - PWM generation (edge mode)
  - One-pulse mode output
- Complementary outputs with programmable dead-time (for channel 1 only)
- Synchronization circuit to control the timer with external signals and to interconnect several timers together
- Repetition counter to update the timer registers only after a given number of cycles of the counter
- Break input to put the timer’s output signals in the reset state or a known state
- Interrupt/DMA generation on the following events:
  - Update: counter overflow, counter initialization (by software or internal/external trigger)
  - Trigger event (counter start, stop, initialization or count by internal/external trigger)
  - Input capture
  - Output compare
  - Break input (interrupt request)

27.3 TIM16 main features

The TIM16 timer include the following features:

- 16-bit auto-reload upcounter
- 16-bit programmable prescaler used to divide (also “on the fly”) the counter clock frequency by any factor between 1 and 65535
- One channel for:
  - Input capture
  - Output compare
  - PWM generation (edge-aligned mode)
  - One-pulse mode output
- Complementary outputs with programmable dead-time
- Repetition counter to update the timer registers only after a given number of cycles of the counter
- Break input to put the timer’s output signals in the reset state or a known state
- Interrupt/DMA generation on the following events:
  - Update: counter overflow
  - Trigger event (counter start, stop, initialization or count by internal/external trigger)
  - Input capture
  - Output compare
  - Break input

Figure 272. TIM15 block diagram

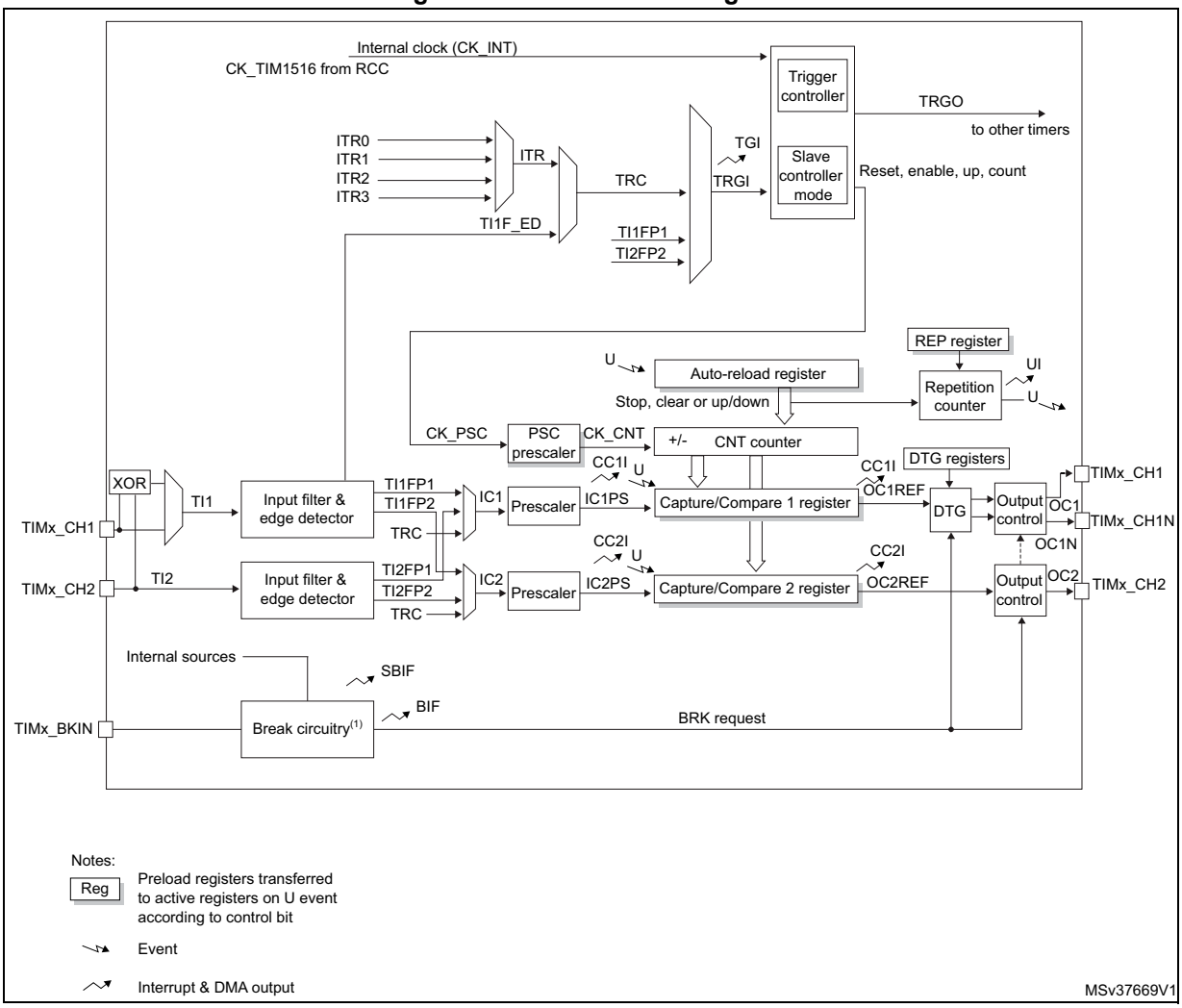

1. The internal break event source can be:
   - A clock failure event generated by CSS. For further information on the CSS, refer to *Section 6.2.10: Clock security system (CSS)*
   - A PVD output
   - SRAM parity error signal
   - Cortex®-M4 LOCKUP (Hardfault) output
   - COMP output

Figure 273. TIM16 block diagram

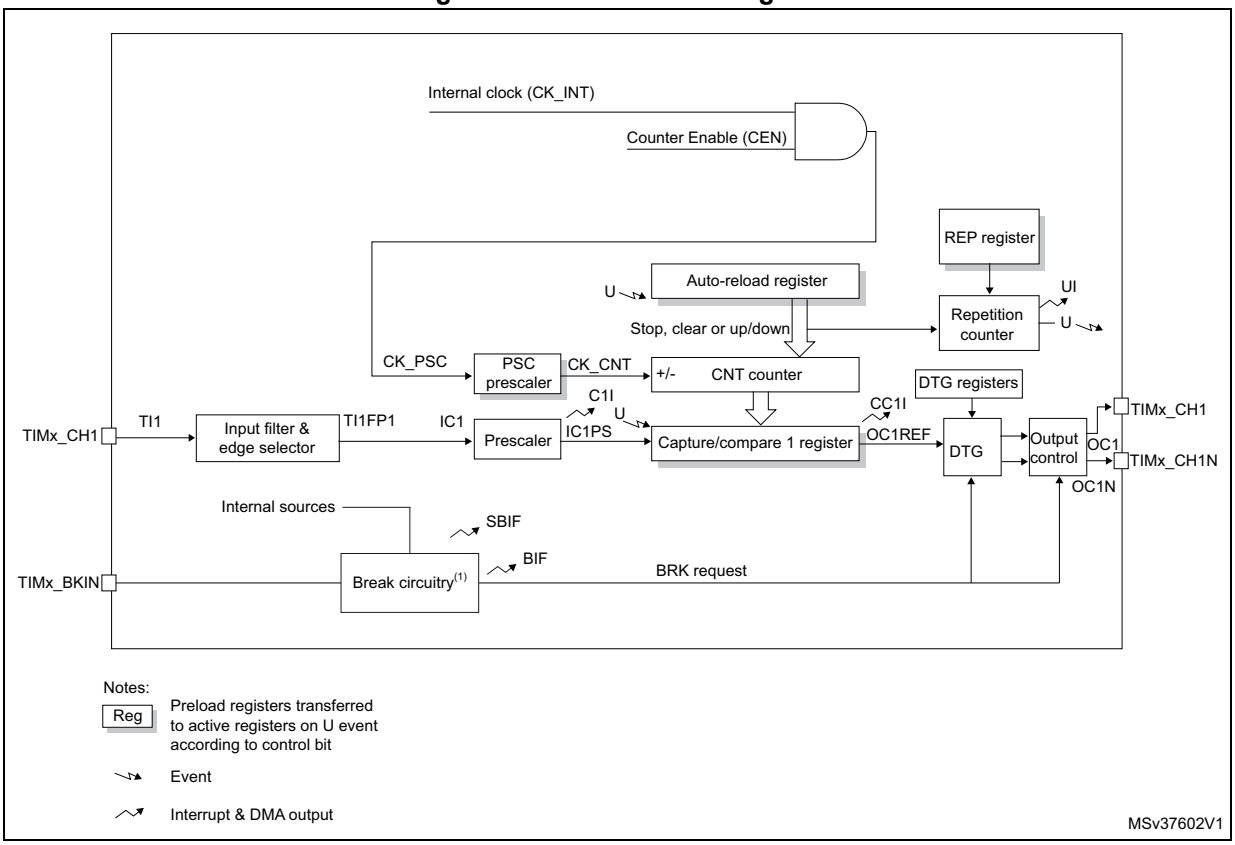

1. The internal break event source can be:
   - A clock failure event generated by CSS. For further information on the CSS, refer to *Section 6.2.10: Clock security system (CSS)*
   - A PVD output
   - SRAM parity error signal
   - Cortex®-M4 LOCKUP (Hardfault) output
   - COMP output

27.4 TIM15/TIM16 functional description

27.4.1 Time-base unit

The main block of the programmable advanced-control timer is a 16-bit upcounter with its related auto-reload register. The counter clock can be divided by a prescaler.

The counter, the auto-reload register and the prescaler register can be written or read by software. This is true even when the counter is running.

The time-base unit includes:

- Counter register (TIMx_CNT)
- Prescaler register (TIMx_PSC)
- Auto-reload register (TIMx_ARR)
- Repetition counter register (TIMx_RCR)

The auto-reload register is preloaded. Writing to or reading from the auto-reload register accesses the preload register. The content of the preload register are transferred into the shadow register permanently or at each update event (UEV), depending on the auto-reload preload enable bit (ARPE) in TIMx_CR1 register. The update event is sent when the counter reaches the overflow and if the UDIS bit equals 0 in the TIMx_CR1 register. It can also be generated by software. The generation of the update event is described in detailed for each configuration.

The counter is clocked by the prescaler output CK_CNT, which is enabled only when the counter enable bit (CEN) in TIMx_CR1 register is set (refer also to the slave mode controller description to get more details on counter enabling).

Note that the counter starts counting 1 clock cycle after setting the CEN bit in the TIMx_CR1 register.

Prescaler description

The prescaler can divide the counter clock frequency by any factor between 1 and 65536. It is based on a 16-bit counter controlled through a 16-bit register (in the TIMx_PSC register). It can be changed on the fly as this control register is buffered. The new prescaler ratio is taken into account at the next update event.

Figure 274 and *Figure 275* give some examples of the counter behavior when the prescaler ratio is changed on the fly:

Figure 274. Counter timing diagram with prescaler division change from 1 to 2

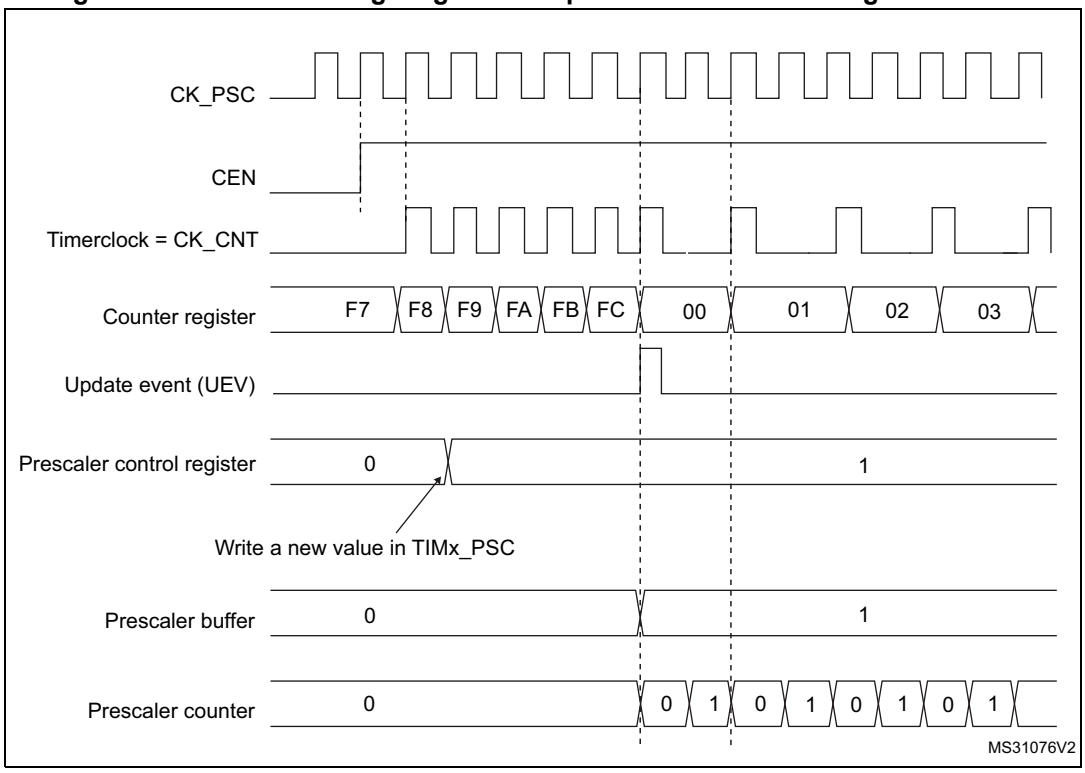

Figure 275. Counter timing diagram with prescaler division change from 1 to 4

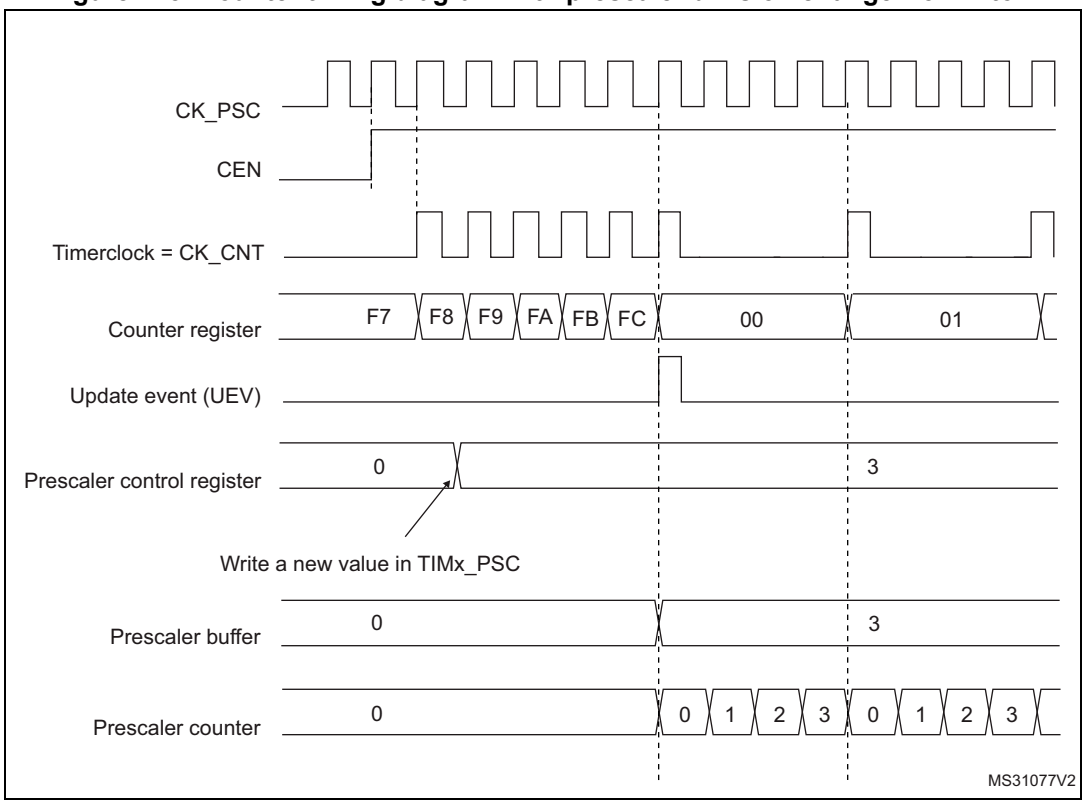

27.4.2 Counter modes

Upcounting mode

In upcounting mode, the counter counts from 0 to the auto-reload value (content of the TIMx_ARR register), then restarts from 0 and generates a counter overflow event.

If the repetition counter is used, the update event (UEV) is generated after upcounting is repeated for the number of times programmed in the repetition counter register (TIMx_RCR). Else the update event is generated at each counter overflow.

Setting the UG bit in the TIMx_EGR register (by software or by using the slave mode controller) also generates an update event.

The UEV event can be disabled by software by setting the UDIS bit in the TIMx_CR1 register. This is to avoid updating the shadow registers while writing new values in the preload registers. Then no update event occurs until the UDIS bit has been written to 0. However, the counter restarts from 0, as well as the counter of the prescaler (but the prescale rate does not change). In addition, if the URS bit (update request selection) in TIMx_CR1 register is set, setting the UG bit generates an update event UEV but without setting the UIF flag (thus no interrupt or DMA request is sent). This is to avoid generating both update and capture interrupts when clearing the counter on the capture event.

When an update event occurs, all the registers are updated and the update flag (UIF bit in TIMx_SR register) is set (depending on the URS bit):

- The repetition counter is reloaded with the content of TIMx_RCR register,
- The auto-reload shadow register is updated with the preload value (TIMx_ARR),
- The buffer of the prescaler is reloaded with the preload value (content of the TIMx_PSC register).

The following figures show some examples of the counter behavior for different clock frequencies when TIMx_ARR=0x36.

Figure 276. Counter timing diagram, internal clock divided by 1

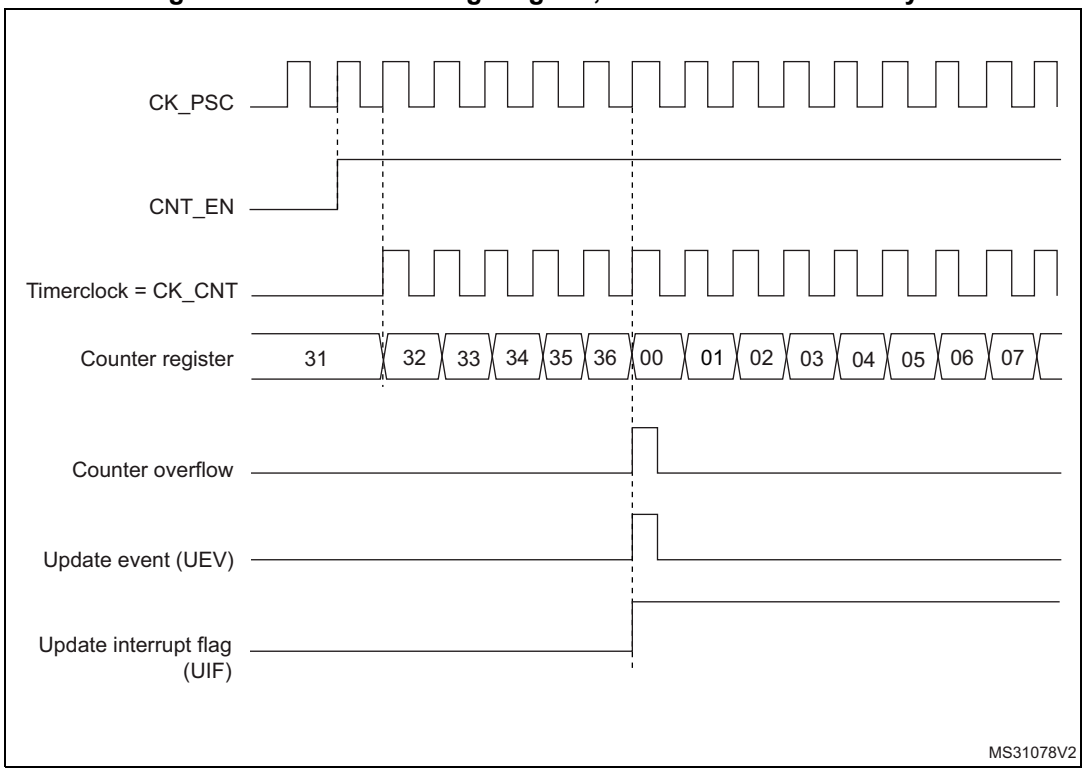

Figure 277. Counter timing diagram, internal clock divided by 2

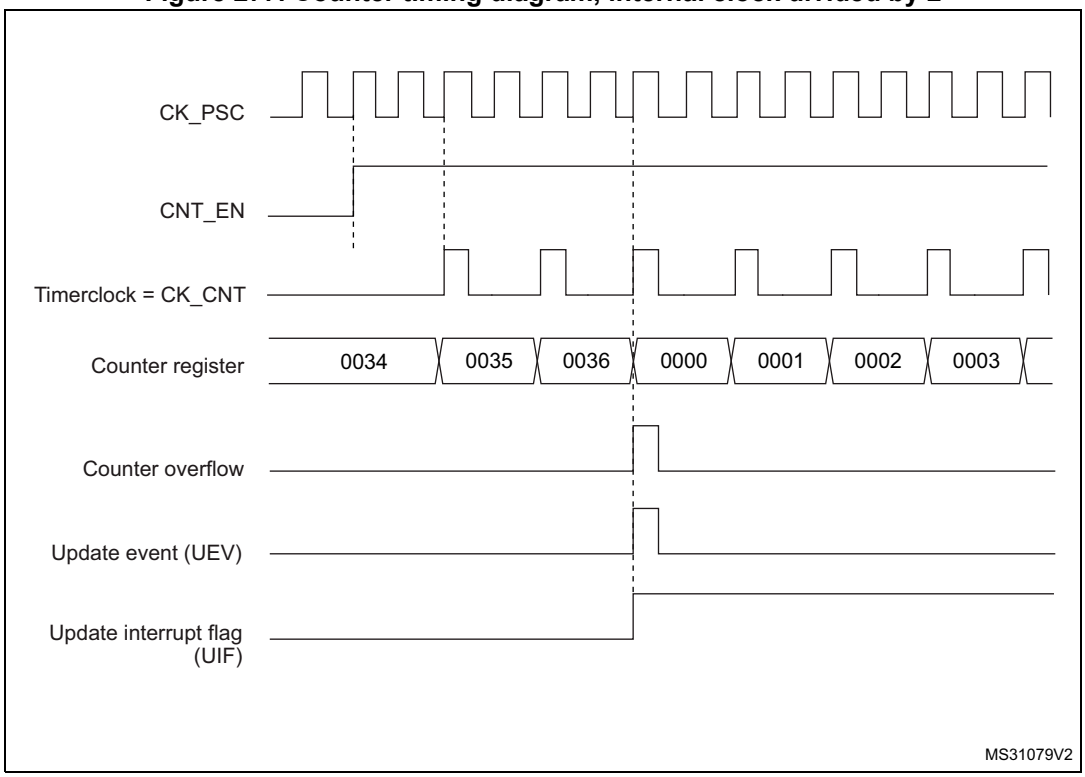

Figure 278. Counter timing diagram, internal clock divided by 4

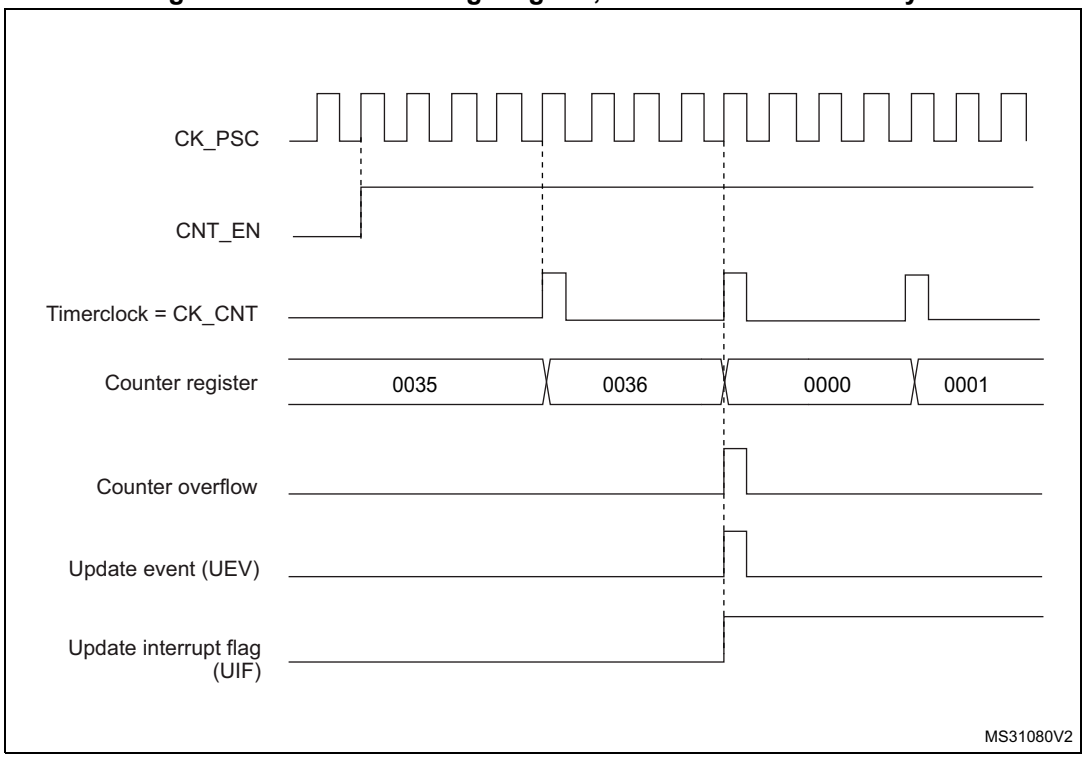

Figure 279. Counter timing diagram, internal clock divided by N

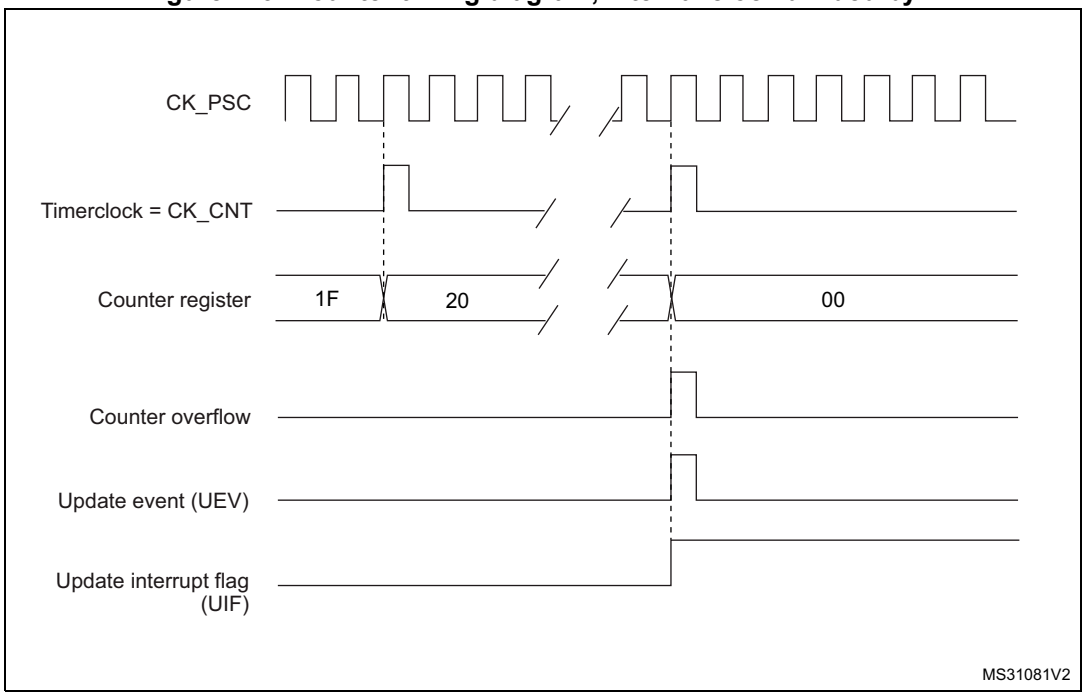

Figure 280. Counter timing diagram, update event when ARPE=0 (TIMx_ARR not preloaded)

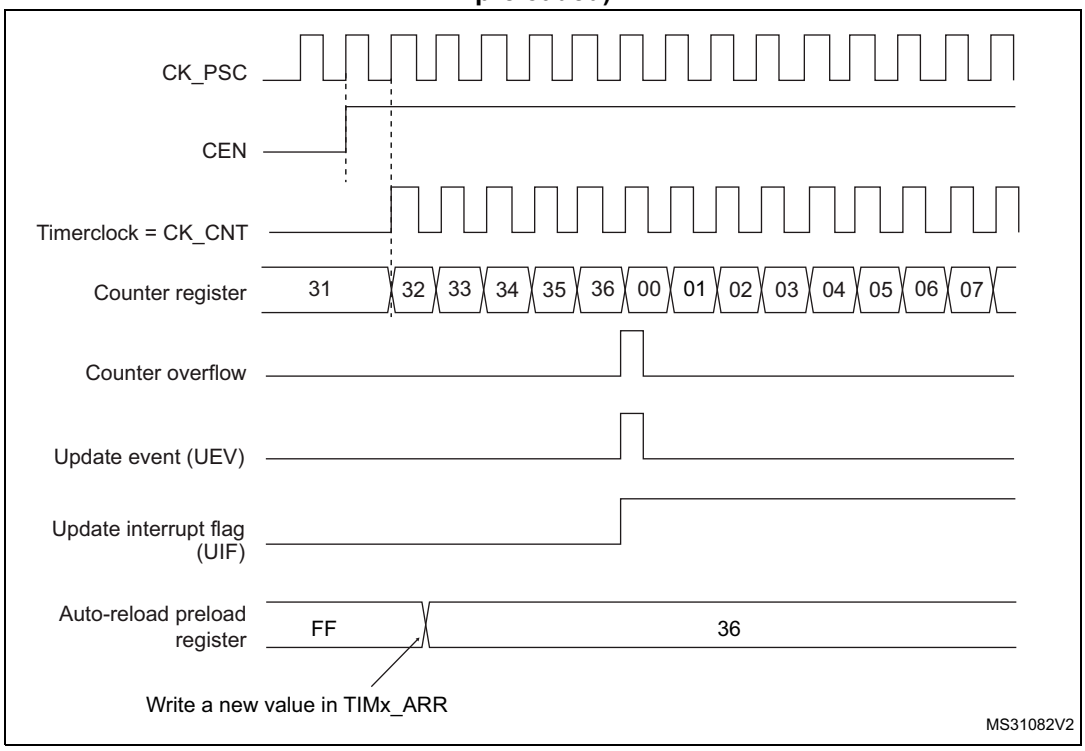

Figure 281. Counter timing diagram, update event when ARPE=1 (TIMx_ARR preloaded)

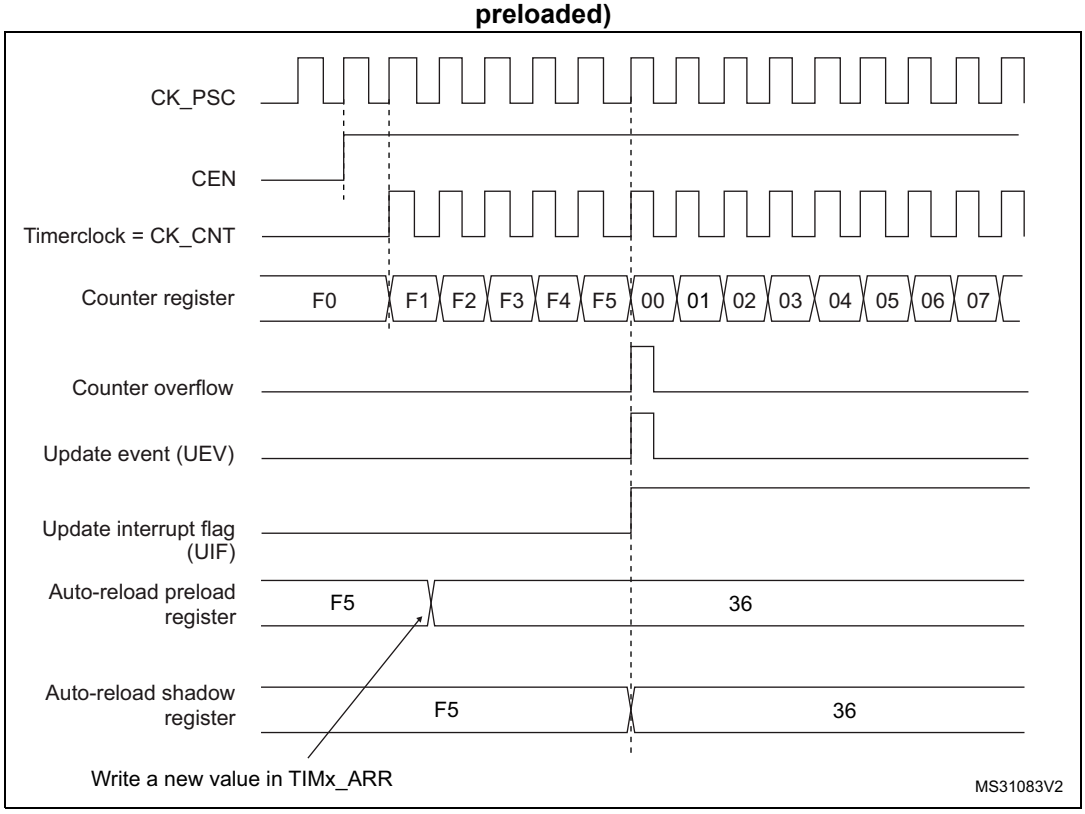

27.4.3 Repetition counter

Section 27.4.1: Time-base unit describes how the update event (UEV) is generated with respect to the counter overflows. It is actually generated only when the repetition counter has reached zero. This can be useful when generating PWM signals.

This means that data are transferred from the preload registers to the shadow registers (TIMx_ARR auto-reload register, TIMx_PSC prescaler register, but also TIMx_CCRx capture/compare registers in compare mode) every N counter overflows, where N is the value in the TIMx_RCR repetition counter register.

The repetition counter is decremented at each counter overflow.

The repetition counter is an auto-reload type; the repetition rate is maintained as defined by the TIMx_RCR register value (refer to *Figure 282*). When the update event is generated by software (by setting the UG bit in TIMx_EGR register) or by hardware through the slave mode controller, it occurs immediately whatever the value of the repetition counter is and the repetition counter is reloaded with the content of the TIMx_RCR register.

Figure 282. Update rate examples depending on mode and TIMx_RCR register settings

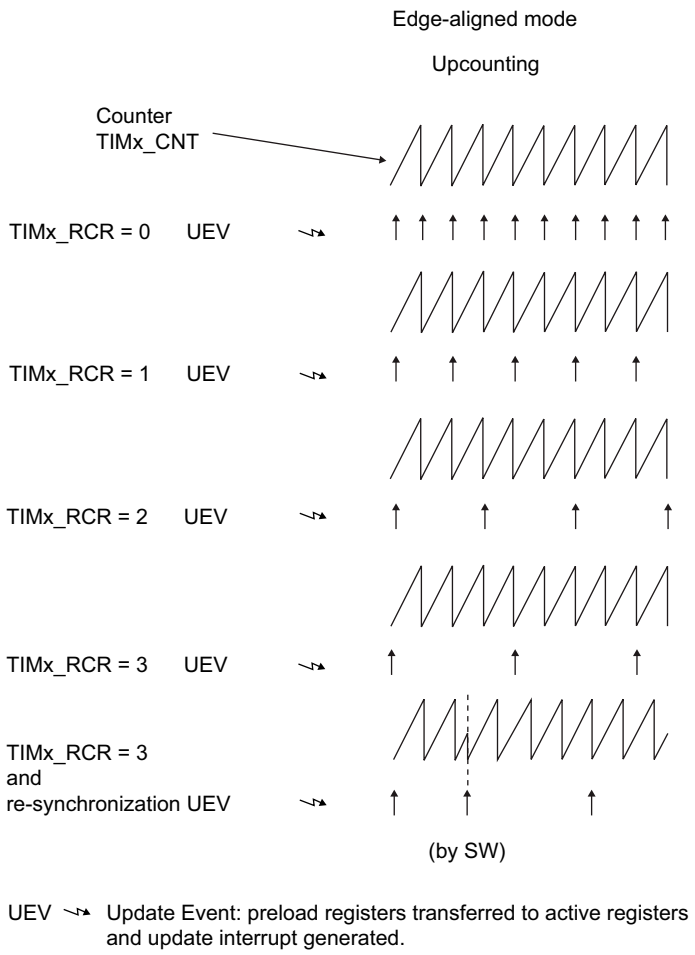

27.4.4 Clock selection

The counter clock can be provided by the following clock sources:

- Internal clock (CK_INT)
- External clock mode1: external input pin
- Internal trigger inputs (ITRx) (only for TIM15): using one timer as the prescaler for another timer, for example, you can configure TIM1 to act as a prescaler for TIM15. Refer to *Using one timer as prescaler for another timer on page 756* for more details.

Internal clock source (CK_INT)

If the slave mode controller is disabled (SMS=000), then the CEN (in the TIMx_CR1 register) and UG bits (in the TIMx_EGR register) are actual control bits and can be changed

only by software (except UG which remains cleared automatically). As soon as the CEN bit is written to 1, the prescaler is clocked by the internal clock CK_INT.

Figure 283 shows the behavior of the control circuit and the upcounter in normal mode, without prescaler.

Figure 283. Control circuit in normal mode, internal clock divided by 1

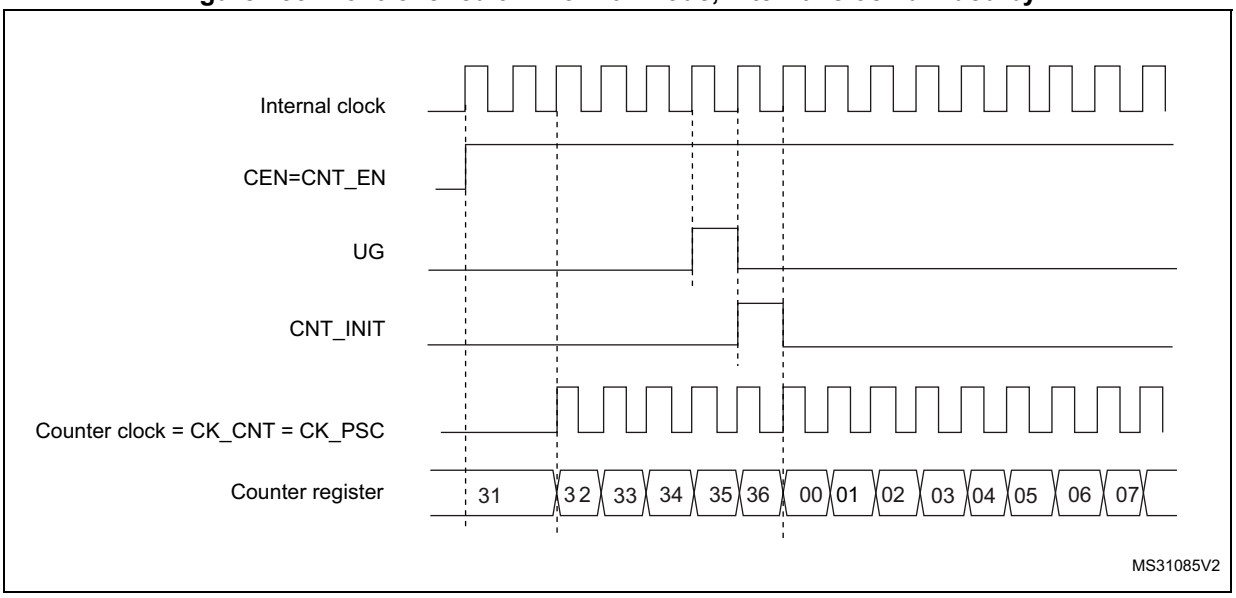

External clock source mode 1

This mode is selected when SMS=111 in the TIMx_SMCR register. The counter can count at each rising or falling edge on a selected input.

Figure 284. TI2 external clock connection example

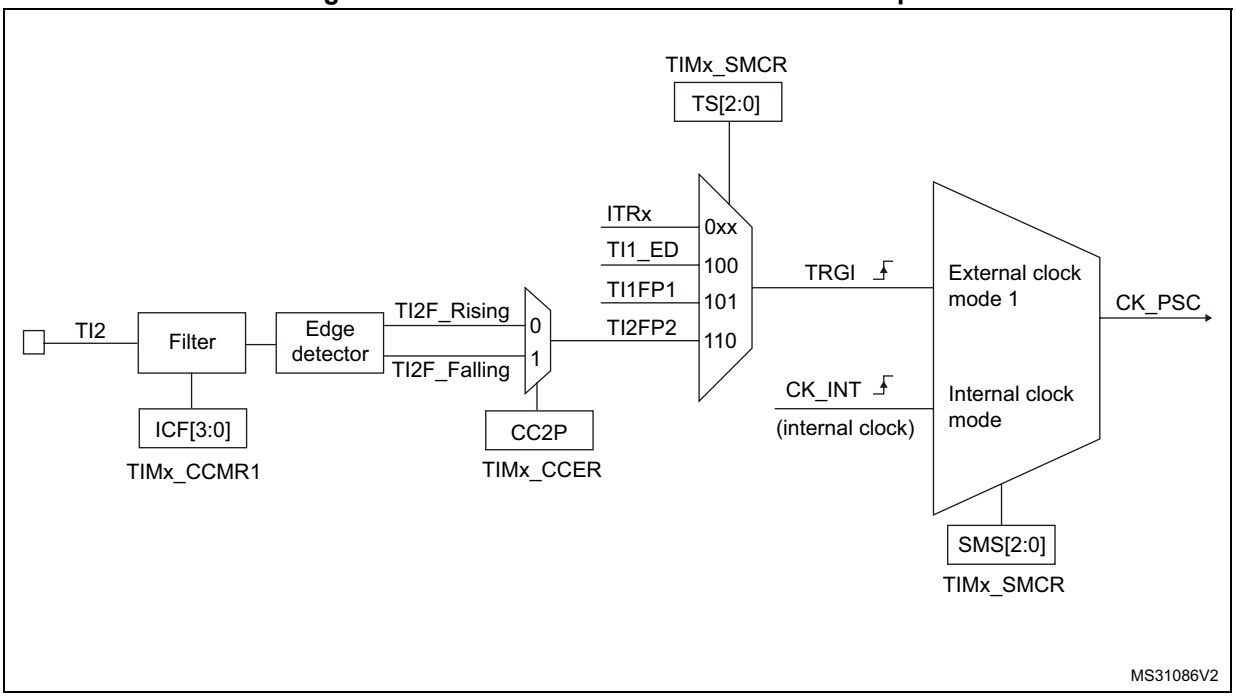

For example, to configure the upcounter to count in response to a rising edge on the TI2 input, use the following procedure:

1. Configure channel 2 to detect rising edges on the TI2 input by writing CC2S = '01' in the TIMx_CCMR1 register.
2. Configure the input filter duration by writing the IC2F[3:0] bits in the TIMx_CCMR1 register (if no filter is needed, keep IC2F=0000).
3. Select rising edge polarity by writing CC2P=0 in the TIMx_CCER register.
4. Configure the timer in external clock mode 1 by writing SMS=111 in the TIMx_SMCR register.
5. Select TI2 as the trigger input source by writing TS=110 in the TIMx_SMCR register.
6. Enable the counter by writing CEN=1 in the TIMx_CR1 register.

Note: The capture prescaler is not used for triggering, so you don't need to configure it.

When a rising edge occurs on TI2, the counter counts once and the TIF flag is set.

The delay between the rising edge on TI2 and the actual clock of the counter is due to the resynchronization circuit on TI2 input.

Figure 285. Control circuit in external clock mode 1

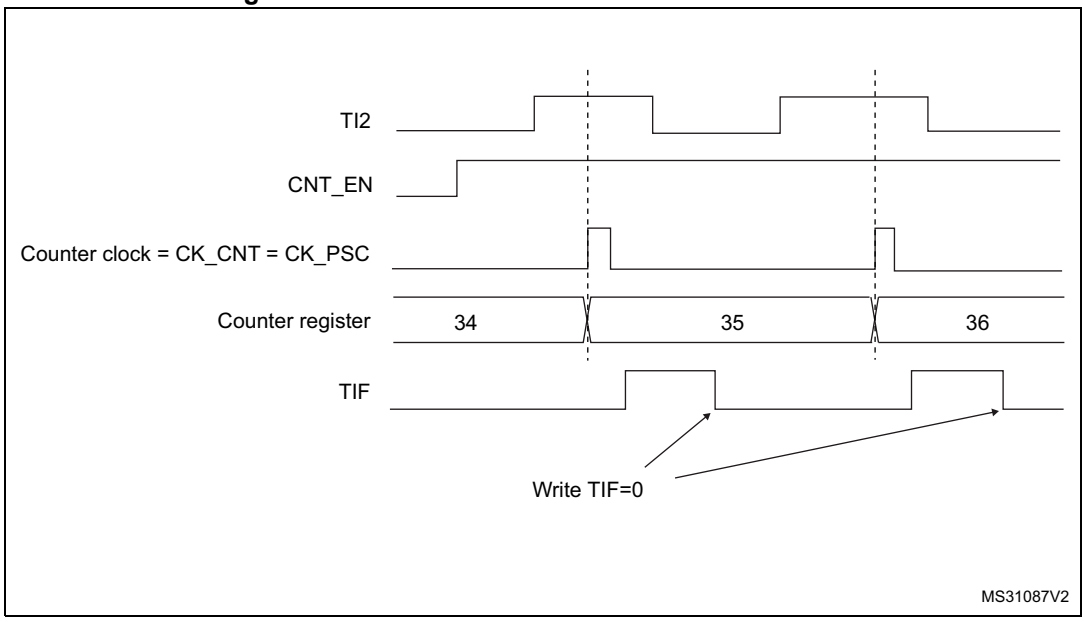

27.4.5 Capture/compare channels

Each Capture/Compare channel is built around a capture/compare register (including a shadow register), a input stage for capture (with digital filter, multiplexing and prescaler) and an output stage (with comparator and output control).

Figure 286 to *Figure 289* give an overview of one Capture/Compare channel.

The input stage samples the corresponding TIx input to generate a filtered signal TIxF. Then, an edge detector with polarity selection generates a signal (TIxFPx) which can be used as trigger input by the slave mode controller or as the capture command. It is prescaled before the capture register (ICxPS).

Figure 286. Capture/compare channel (example: channel 1 input stage)

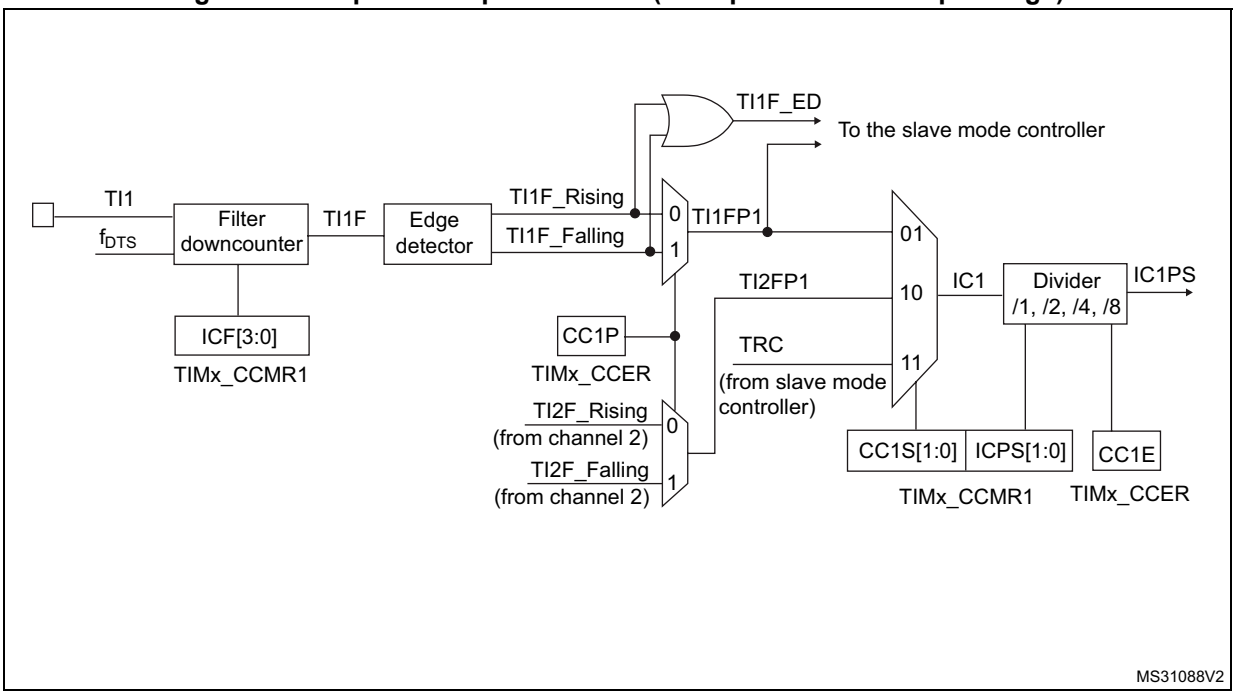

The output stage generates an intermediate waveform which is then used for reference: OCxRef (active high). The polarity acts at the end of the chain.

Figure 287. Capture/compare channel 1 main circuit

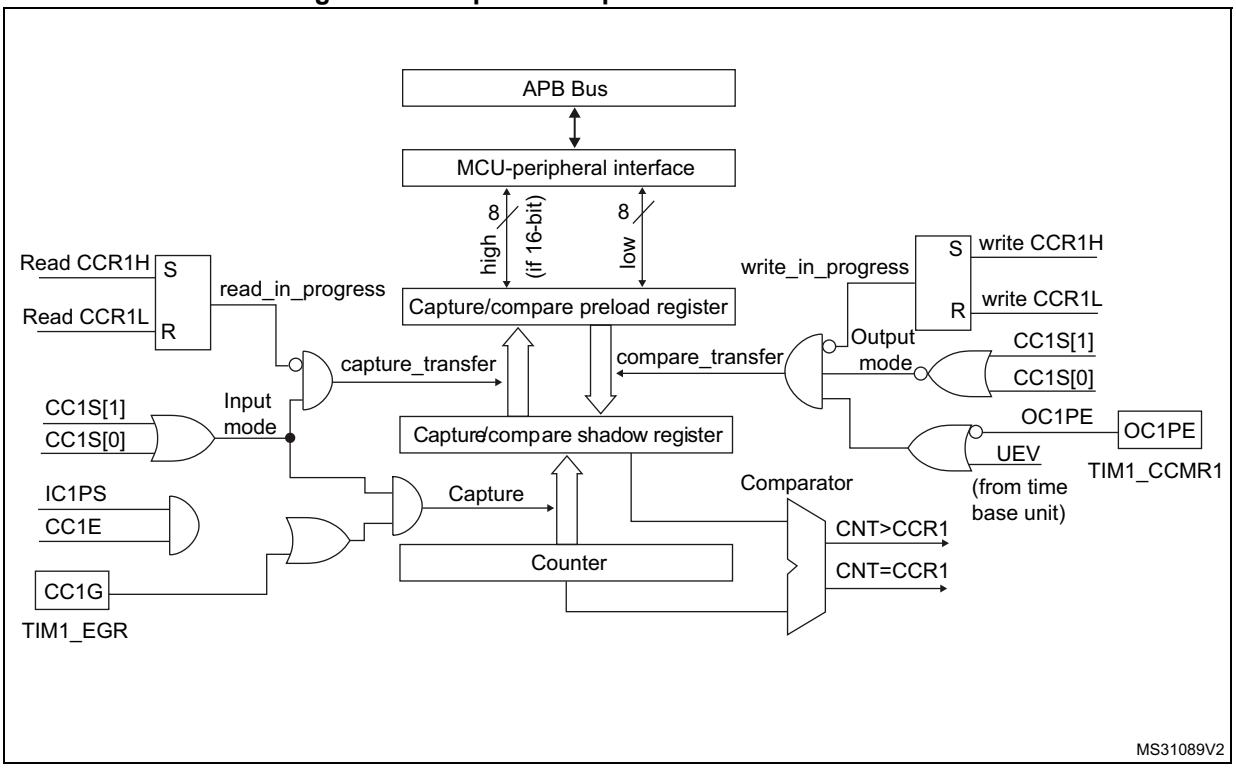

Figure 288. Output stage of capture/compare channel (channel 1)

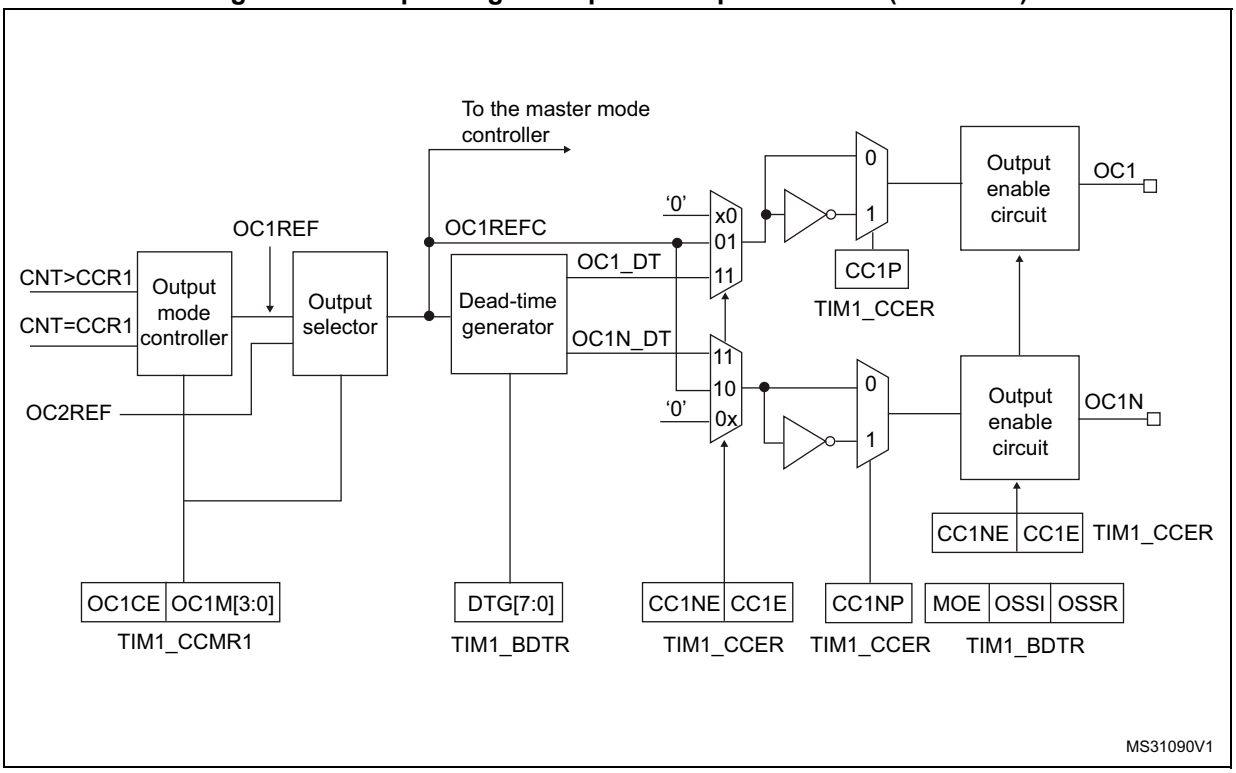

Figure 289. Output stage of capture/compare channel (channel 2 for TIM15)

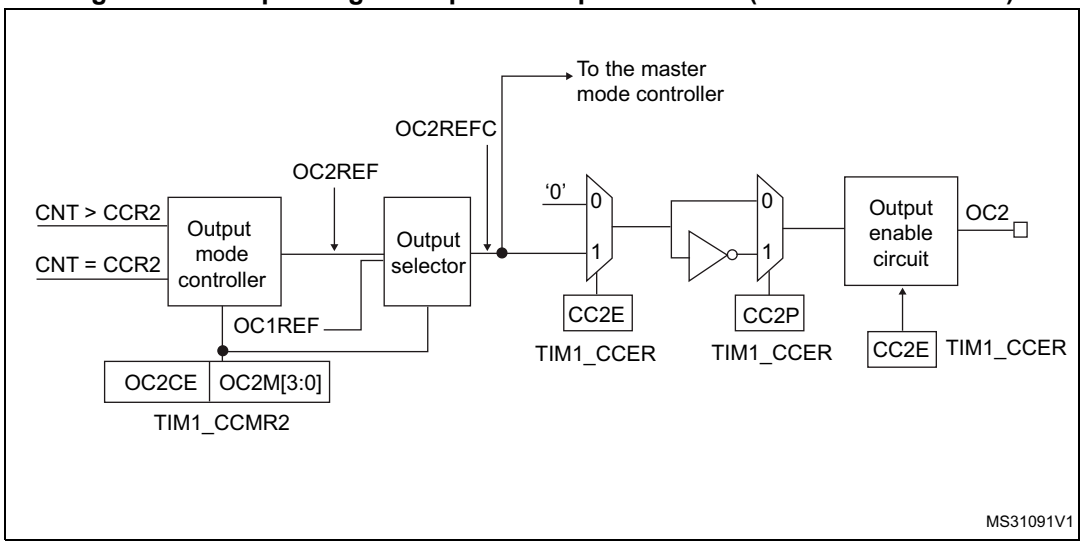

The capture/compare block is made of one preload register and one shadow register. Write and read always access the preload register.

In capture mode, captures are actually done in the shadow register, which is copied into the preload register.

In compare mode, the content of the preload register is copied into the shadow register which is compared to the counter.

27.4.6 Input capture mode

In Input capture mode, the Capture/Compare Registers (TIMx_CCRx) are used to latch the value of the counter after a transition detected by the corresponding ICx signal. When a capture occurs, the corresponding CCXIF flag (TIMx_SR register) is set and an interrupt or a DMA request can be sent if they are enabled. If a capture occurs while the CCxIF flag was already high, then the over-capture flag CCxOF (TIMx_SR register) is set. CCxIF can be cleared by software by writing it to ‘0’ or by reading the captured data stored in the TIMx_CCRx register. CCxOF is cleared when you write it to ‘0’.

The following example shows how to capture the counter value in TIMx_CCR1 when TI1 input rises. To do this, use the following procedure:

1. Select the active input: TIMx_CCR1 must be linked to the TI1 input, so write the CC1S bits to 01 in the TIMx_CCMR1 register. As soon as CC1S becomes different from 00, the channel is configured in input and the TIMx_CCR1 register becomes read-only.
2. Program the input filter duration you need with respect to the signal you connect to the timer (when the input is one of the TIx (ICxF bits in the TIMx_CCMRx register). Let’s imagine that, when toggling, the input signal is not stable during at least 5 internal clock cycles. We must program a filter duration longer than these 5 clock cycles. We can validate a transition on TI1 when 8 consecutive samples with the new level have been detected (sampled at f_{DTS} frequency). Then write IC1F bits to 0011 in the TIMx_CCMR1 register.
3. Select the edge of the active transition on the TI1 channel by writing CC1P bit to 0 in the TIMx_CCER register (rising edge in this case).
4. Program the input prescaler. In our example, we wish the capture to be performed at each valid transition, so the prescaler is disabled (write IC1PS bits to ‘00’ in the TIMx_CCMR1 register).
5. Enable capture from the counter into the capture register by setting the CC1E bit in the TIMx_CCER register.
6. If needed, enable the related interrupt request by setting the CC1IE bit in the TIMx_DIER register, and/or the DMA request by setting the CC1DE bit in the TIMx_DIER register.

When an input capture occurs:

- The TIMx_CCR1 register gets the value of the counter on the active transition.
- CC1IF flag is set (interrupt flag). CC1OF is also set if at least two consecutive captures occurred whereas the flag was not cleared.
- An interrupt is generated depending on the CC1IE bit.
- A DMA request is generated depending on the CC1DE bit.

In order to handle the overcapture, it is recommended to read the data before the overcapture flag. This is to avoid missing an overcapture which could happen after reading the flag and before reading the data.

Note: IC interrupt and/or DMA requests can be generated by software by setting the corresponding CCxG bit in the TIMx_EGR register.

27.4.7 PWM input mode (only for TIM15)

This mode is a particular case of input capture mode. The procedure is the same except:

- Two ICx signals are mapped on the same TIx input.
- These 2 ICx signals are active on edges with opposite polarity.
- One of the two TIxFP signals is selected as trigger input and the slave mode controller is configured in reset mode.

For example, you can measure the period (in TIMx_CCR1 register) and the duty cycle (in TIMx_CCR2 register) of the PWM applied on TI1 using the following procedure (depending on CK_INT frequency and prescaler value):

1. Select the active input for TIMx_CCR1: write the CC1S bits to 01 in the TIMx_CCMR1 register (TI1 selected).
2. Select the active polarity for TI1FP1 (used both for capture in TIMx_CCR1 and counter clear): write the CC1P and CC1NP bits to ‘0’ (active on rising edge).
3. Select the active input for TIMx_CCR2: write the CC2S bits to 10 in the TIMx_CCMR1 register (TI1 selected).
4. Select the active polarity for TI1FP2 (used for capture in TIMx_CCR2): write the CC2P and CC2NP bits to ‘1’ (active on falling edge).
5. Select the valid trigger input: write the TS bits to 101 in the TIMx_SMCR register (TI1FP1 selected).
6. Configure the slave mode controller in reset mode: write the SMS bits to 100 in the TIMx_SMCR register.
7. Enable the captures: write the CC1E and CC2E bits to ‘1’ in the TIMx_CCER register.

Figure 290. PWM input mode timing

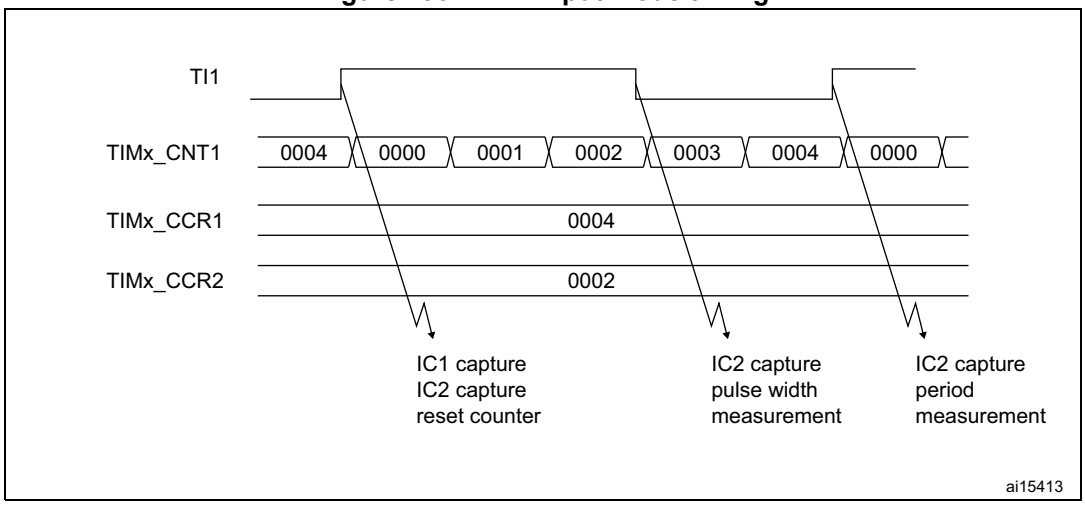

1. The PWM input mode can be used only with the TIMx_CH1/TIMx_CH2 signals due to the fact that only TI1FP1 and TI2FP2 are connected to the slave mode controller.

27.4.8 Forced output mode

In output mode (CCxS bits = 00 in the TIMx_CCMRx register), each output compare signal (OCxREF and then OCx/OCxN) can be forced to active or inactive level directly by software, independently of any comparison between the output compare register and the counter.

To force an output compare signal (OCXREF/OCx) to its active level, you just need to write 101 in the OCxM bits in the corresponding TIMx_CCMRx register. Thus OCXREF is forced high (OCxREF is always active high) and OCx get opposite value to CCxP polarity bit.

For example: CCxP=0 (OCx active high) => OCx is forced to high level.

The OCxREF signal can be forced low by writing the OCxM bits to 100 in the TIMx_CCMRx register.

Anyway, the comparison between the TIMx_CCRx shadow register and the counter is still performed and allows the flag to be set. Interrupt and DMA requests can be sent accordingly. This is described in the output compare mode section below.

27.4.9 Output compare mode

This function is used to control an output waveform or indicating when a period of time has elapsed.

When a match is found between the capture/compare register and the counter, the output compare function:

- Assigns the corresponding output pin to a programmable value defined by the output compare mode (OCxM bits in the TIMx_CCMRx register) and the output polarity (CCxP bit in the TIMx_CCER register). The output pin can keep its level (OCXM=000), be set active (OCxM=001), be set inactive (OCxM=010) or can toggle (OCxM=011) on match.
- Sets a flag in the interrupt status register (CCxIF bit in the TIMx_SR register).
- Generates an interrupt if the corresponding interrupt mask is set (CCXIE bit in the TIMx_DIER register).
- Sends a DMA request if the corresponding enable bit is set (CCxDE bit in the TIMx_DIER register, CCDS bit in the TIMx_CR2 register for the DMA request selection).

The TIMx_CCRx registers can be programmed with or without preload registers using the OCxPE bit in the TIMx_CCMRx register.

In output compare mode, the update event UEV has no effect on OCxREF and OCx output. The timing resolution is one count of the counter. Output compare mode can also be used to output a single pulse (in One-pulse mode).

Procedure

1. Select the counter clock (internal, external, prescaler).
2. Write the desired data in the TIMx_ARR and TIMx_CCRx registers.
3. Set the CCxIE bit if an interrupt request is to be generated.
4. Select the output mode. For example:
   - Write OCxM = 011 to toggle OCx output pin when CNT matches CCRx
   - Write OCxPE = 0 to disable preload register
   - Write CCxP = 0 to select active high polarity
   - Write CCxE = 1 to enable the output
5. Enable the counter by setting the CEN bit in the TIMx_CR1 register.

The TIMx_CCRx register can be updated at any time by software to control the output waveform, provided that the preload register is not enabled (OCxPE='0', else TIMx_CCRx shadow register is updated only at the next update event UEV). An example is given in *Figure 290*.

Figure 291. Output compare mode, toggle on OC1

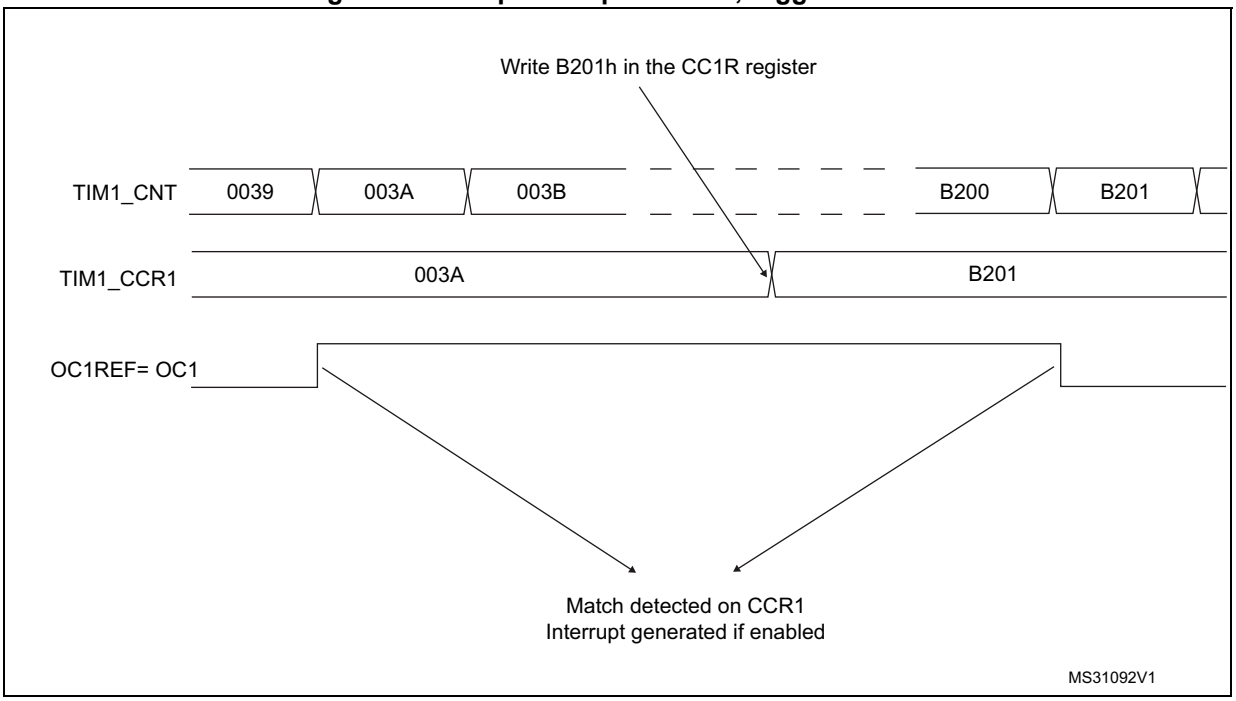

27.4.10 PWM mode

Pulse Width Modulation mode allows you to generate a signal with a frequency determined by the value of the TIMx_ARR register and a duty cycle determined by the value of the TIMx_CCRx register.

The PWM mode can be selected independently on each channel (one PWM per OCx output) by writing '110' (PWM mode 1) or '111' (PWM mode 2) in the OCxM bits in the TIMx_CCMRx register. You must enable the corresponding preload register by setting the OCxPE bit in the TIMx_CCMRx register, and eventually the auto-reload preload register (in upcounting or center-aligned modes) by setting the ARPE bit in the TIMx_CR1 register.

As the preload registers are transferred to the shadow registers only when an update event occurs, before starting the counter, you have to initialize all the registers by setting the UG bit in the TIMx_EGR register.

OCx polarity is software programmable using the CCxP bit in the TIMx_CCER register. It can be programmed as active high or active low. OCx output is enabled by a combination of the CCxE, CCxNE, MOE, OSSI and OSSR bits (TIMx_CCER and TIMx_BDTR registers). Refer to the TIMx_CCER register description for more details.

In PWM mode (1 or 2), TIMx_CNT and TIMx_CCRx are always compared to determine whether TIMx_CCRx ≤ TIMx_CNT or TIMx_CNT ≤ TIMx_CCRx (depending on the direction of the counter).

The TIM15/TIM16 are capable of upcounting only. Refer to *Upcounting mode on page 792*.

In the following example, we consider PWM mode 1. The reference PWM signal OCxREF is high as long as TIMx_CNT < TIMx_CCRx else it becomes low. If the compare value in TIMx_CCRx is greater than the auto-reload value (in TIMx_ARR) then OCxREF is held at ‘1’. If the compare value is 0 then OCxRef is held at ‘0’. *Figure 292* shows some edge-aligned PWM waveforms in an example where TIMx_ARR=8.

Figure 292. Edge-aligned PWM waveforms (ARR=8)

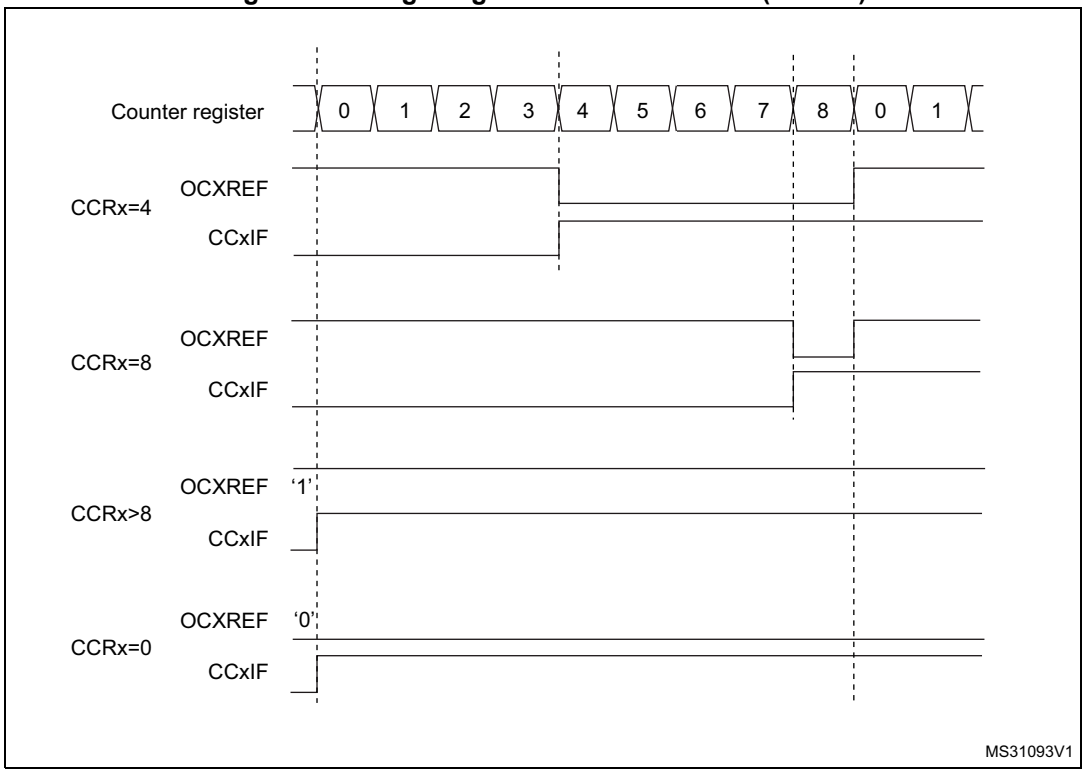

27.4.11 Combined PWM mode (TIM15 only)

Combined PWM mode allows two edge or center-aligned PWM signals to be generated with programmable delay and phase shift between respective pulses. While the frequency is determined by the value of the TIMx_ARR register, the duty cycle and delay are determined

by the two TIMx_CCRx registers. The resulting signals, OCxREFC, are made of an OR or AND logical combination of two reference PWMs:

- OC1REFC (or OC2REFC) is controlled by the TIMx_CCR1 and TIMx_CCR2 registers

Combined PWM mode can be selected independently on two channels (one OCx output per pair of CCR registers) by writing '1100' (Combined PWM mode 1) or '1101' (Combined PWM mode 2) in the OCxM bits in the TIMx_CCMRx register.

When a given channel is used as a combined PWM channel, its complementary channel must be configured in the opposite PWM mode (for instance, one in Combined PWM mode 1 and the other in Combined PWM mode 2).

Note: The OCxM[3:0] bit field is split into two parts for compatibility reasons, the most significant bit is not contiguous with the 3 least significant ones.

Figure 293 represents an example of signals that can be generated using Asymmetric PWM mode, obtained with the following configuration:

- Channel 1 is configured in Combined PWM mode 2,
- Channel 2 is configured in PWM mode 1,

Figure 293. Combined PWM mode on channel 1 and 2

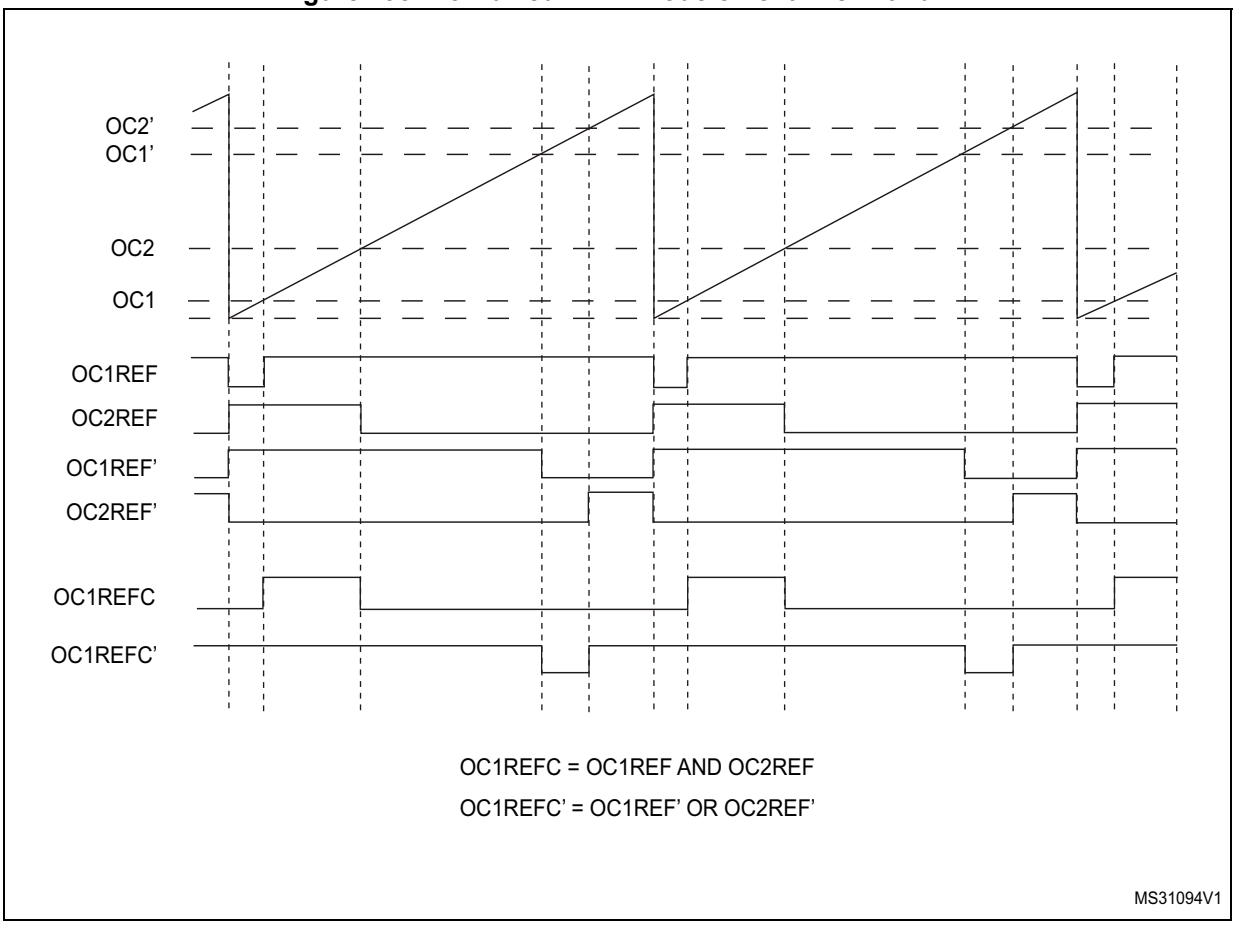

27.4.12 Complementary outputs and dead-time insertion

The TIM15/TIM16 general-purpose timers can output one complementary signal and manage the switching-off and switching-on of the outputs.

This time is generally known as dead-time and you have to adjust it depending on the devices you have connected to the outputs and their characteristics (intrinsic delays of level-shifters, delays due to power switches...)

You can select the polarity of the outputs (main output OCx or complementary OCxN) independently for each output. This is done by writing to the CCxP and CCxNP bits in the TIMx_CCER register.

The complementary signals OCx and OCxN are activated by a combination of several control bits: the CCxE and CCxNE bits in the TIMx_CCER register and the MOE, OISx, OISxN, OSSI and OSSR bits in the TIMx_BDTR and TIMx_CR2 registers. Refer to *Table 119: Output control bits for complementary OCx and OCxN channels with break feature (TIM15) on page 835* for more details. In particular, the dead-time is activated when switching to the idle state (MOE falling down to 0).

Dead-time insertion is enabled by setting both CCxE and CCxNE bits, and the MOE bit if the break circuit is present. There is one 10-bit dead-time generator for each channel. From a reference waveform OCxREF, it generates 2 outputs OCx and OCxN. If OCx and OCxN are active high:

- The OCx output signal is the same as the reference signal except for the rising edge, which is delayed relative to the reference rising edge.
- The OCxN output signal is the opposite of the reference signal except for the rising edge, which is delayed relative to the reference falling edge.

If the delay is greater than the width of the active output (OCx or OCxN) then the corresponding pulse is not generated.

The following figures show the relationships between the output signals of the dead-time generator and the reference signal OCxREF. (we suppose CCxP=0, CCxNP=0, MOE=1, CCxE=1 and CCxNE=1 in these examples)

Figure 294. Complementary output with dead-time insertion.

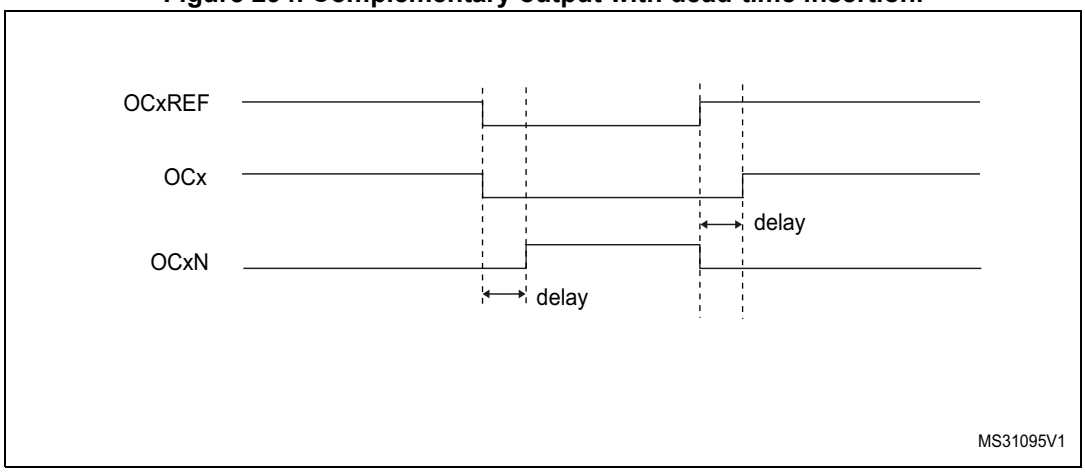

Figure 295. Dead-time waveforms with delay greater than the negative pulse.

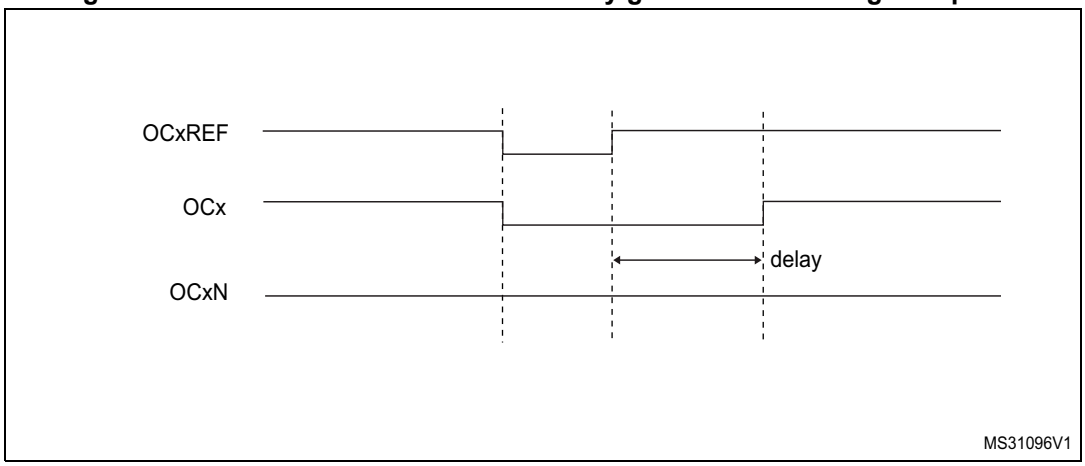

Figure 296. Dead-time waveforms with delay greater than the positive pulse.

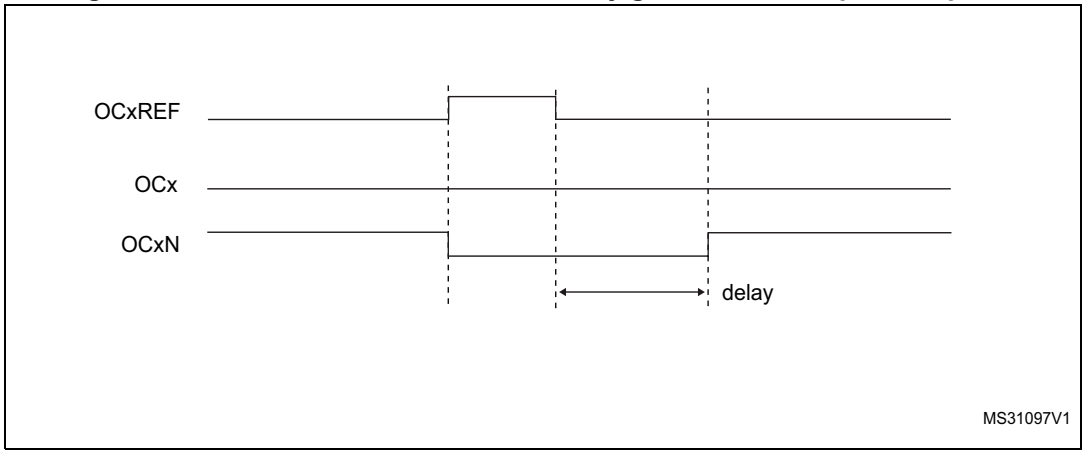

The dead-time delay is the same for each of the channels and is programmable with the DTG bits in the TIMx_BDTR register. Refer to *Section 27.5.15: TIM15 break and dead-time register (TIM15_BDTR) on page 838* for delay calculation.

Re-directing OCxREF to OCx or OCxN

In output mode (forced, output compare or PWM), OCxREF can be re-directed to the OCx output or to OCxN output by configuring the CCxE and CCxNE bits in the TIMx_CCER register.

This allows you to send a specific waveform (such as PWM or static active level) on one output while the complementary remains at its inactive level. Other alternative possibilities are to have both outputs at inactive level or both outputs active and complementary with dead-time.

Note: When only OCxN is enabled (CCxE=0, CCxNE=1), it is not complemented and becomes active as soon as OCxREF is high. For example, if CCxNP=0 then OCxN=OCxRef. On the other hand, when both OCx and OCxN are enabled (CCxE=CCxNE=1) OCx becomes active when OCxREF is high whereas OCxN is complemented and becomes active when OCxREF is low.

27.4.13 Using the break function

The purpose of the break function is to protect power switches driven by PWM signals generated with the TIM15/TIM16 timers. The break input is usually connected to fault outputs of power stages and 3-phase inverters. When activated, the break circuitry shuts down the PWM outputs and forces them to a predefined safe state.

The break channel gathers both system-level fault (clock failure, parity error,...) and application fault (from input pins and built-in comparator), and can force the outputs to a predefined level (either active or inactive) after a deadtime duration.

The output enable signal and output levels during break are depending on several control bits:

- the MOE bit in TIMx_BDTR register allows to enable /disable the outputs by software and is reset in case of break or break2 event.
- the OSSI bit in the TIMx_BDTR register defines whether the timer controls the output in inactive state or releases the control to the GPIO controller (typically to have it in Hi-Z mode)
- the OISx and OISxN bits in the TIMx_CR2 register which are setting the output shut-down level, either active or inactive. The OCx and OCxN outputs cannot be set both to active level at a given time, whatever the OISx and OISxN values. Refer to *Table 119: Output control bits for complementary OCx and OCxN channels with break feature (TIM15) on page 835* for more details.

When exiting from reset, the break circuit is disabled and the MOE bit is low. The break function is enabled by setting the BKE bit in the TIMx_BDTR register. The break input polarity can be selected by configuring the BKP bit in the same register. BKE and BKP can be modified at the same time. When the BKE and BKP bits are written, a delay of 1 APB clock cycle is applied before the writing is effective. Consequently, it is necessary to wait 1 APB clock period to correctly read back the bit after the write operation.

Because MOE falling edge can be asynchronous, a resynchronization circuit has been inserted between the actual signal (acting on the outputs) and the synchronous control bit (accessed in the TIMx_BDTR register). It results in some delays between the asynchronous and the synchronous signals. In particular, if you write MOE to 1 whereas it was low, you must insert a delay (dummy instruction) before reading it correctly. This is because you write the asynchronous signal and read the synchronous signal.

The break can be generated from multiple sources which can be individually enabled and with programmable edge sensitivity, using the TIMx_OR2 register.

The sources for break (BRK) channel are:

- An external source connected to one of the BKIN pin (as per selection done in the AFIO controller), with polarity selection and optional digital filtering
- An internal source:
  - the Cortex®-M4 LOCKUP output
  - the PVD output
  - the SRAM parity error signal
  - a flash ECC error
  - a clock failure event generated by the CSS detector
  - the output from a comparator, with polarity selection and optional digital filtering

Break events can also be generated by software using BG bit in the TIMx_EGR register.

All sources are ORed before entering the timer BRK inputs, as per *Figure 297* below.

Figure 297. Break circuitry overview

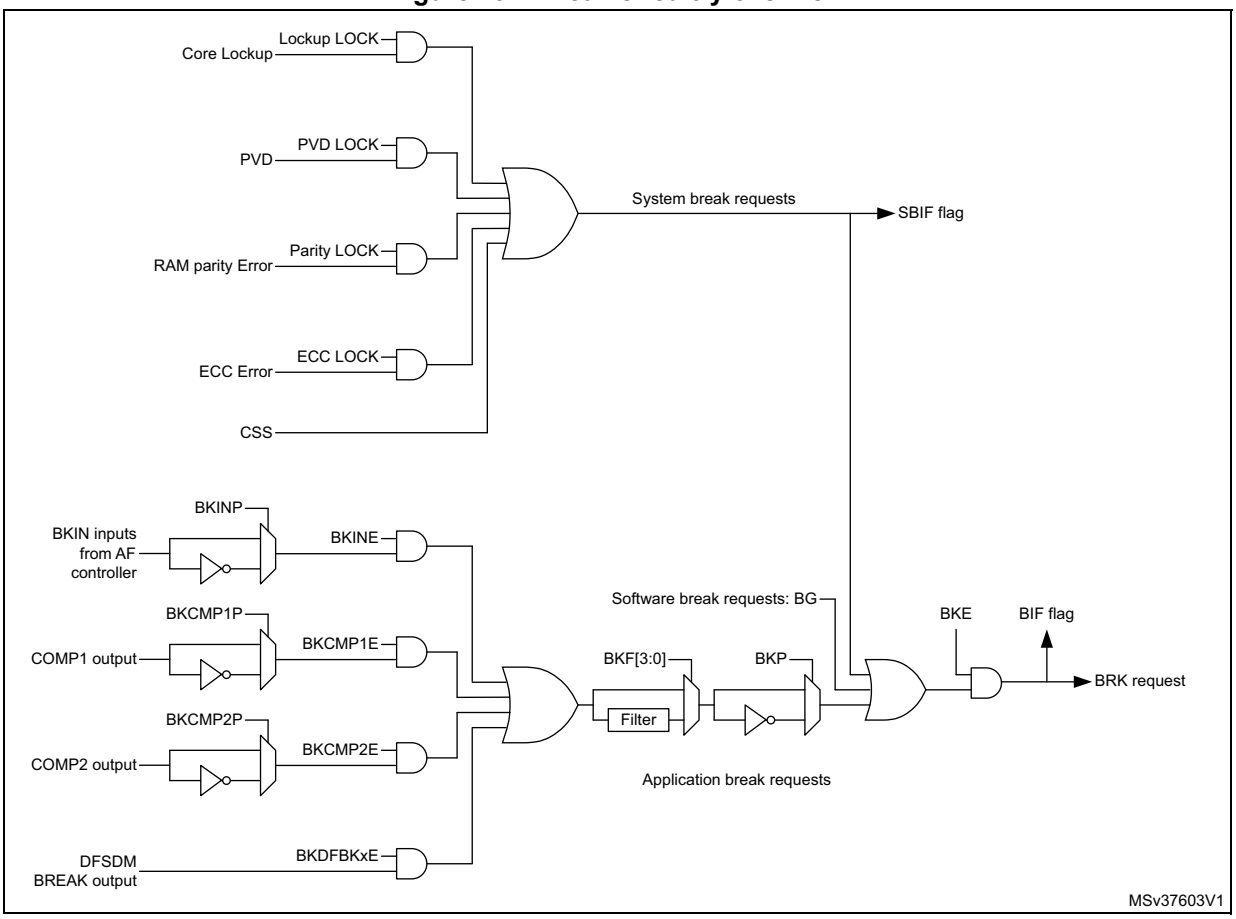

Note: An asynchronous (clockless) operation is only guaranteed when the programmable filter is disabled. If it is enabled, a fail safe clock mode (for example by using the internal PLL and/or the CSS) must be used to guarantee that break events are handled.

When a break occurs (selected level on the break input):

- The MOE bit is cleared asynchronously, putting the outputs in inactive state, idle state or even releasing the control to the AFIO controller (selected by the OSSI bit). This feature functions even if the MCU oscillator is off.
- Each output channel is driven with the level programmed in the OISx bit in the TIMx_CR2 register as soon as MOE=0. If OSSI=0, the timer releases the output control (taken over by the AFIO controller) else the enable output remains high.
- When complementary outputs are used:
  - The outputs are first put in reset state inactive state (depending on the polarity). This is done asynchronously so that it works even if no clock is provided to the timer.
  - If the timer clock is still present, then the dead-time generator is reactivated in order to drive the outputs with the level programmed in the OISx and OISxN bits after a dead-time. Even in this case, OCx and OCxN cannot be driven to their

active level together. Note that because of the resynchronization on MOE, the dead-time duration is a bit longer than usual (around 2 ck_tim clock cycles).

  – If OSSI=0 then the timer releases the enable outputs (taken over by the AFIO controller which forces a Hi-Z state) else the enable outputs remain or become high as soon as one of the CCxE or CCxNE bits is high.

- The break status flag (BIF bit in the TIMx_SR register) is set. An interrupt can be generated if the BIE bit in the TIMx_DIER register is set. A DMA request can be sent if the BDE bit in the TIMx_DIER register is set.
- If the AOE bit in the TIMx_BDTR register is set, the MOE bit is automatically set again at the next update event UEV. This can be used to perform a regulation, for instance. Else, MOE remains low until you write it to '1' again. In this case, it can be used for security and you can connect the break input to an alarm from power drivers, thermal sensors or any security components.

Note: The break inputs is acting on level. Thus, the MOE cannot be set while the break input is active (neither automatically nor by software). In the meantime, the status flag BIF cannot be cleared.

The break can be generated by the BRK input which has a programmable polarity and an enable bit BKE in the TIMx_BDTR Register.

In addition to the break input and the output management, a write protection has been implemented inside the break circuit to safeguard the application. It allows you to freeze the configuration of several parameters (dead-time duration, OCx/OCxN polarities and state when disabled, OCxM configurations, break enable and polarity). You can choose from 3 levels of protection selected by the LOCK bits in the TIMx_BDTR register. Refer to *Section 27.5.15: TIM15 break and dead-time register (TIM15_BDTR) on page 838*. The LOCK bits can be written only once after an MCU reset.

The *Figure 298* shows an example of behavior of the outputs in response to a break.

Figure 298. Output behavior in response to a break

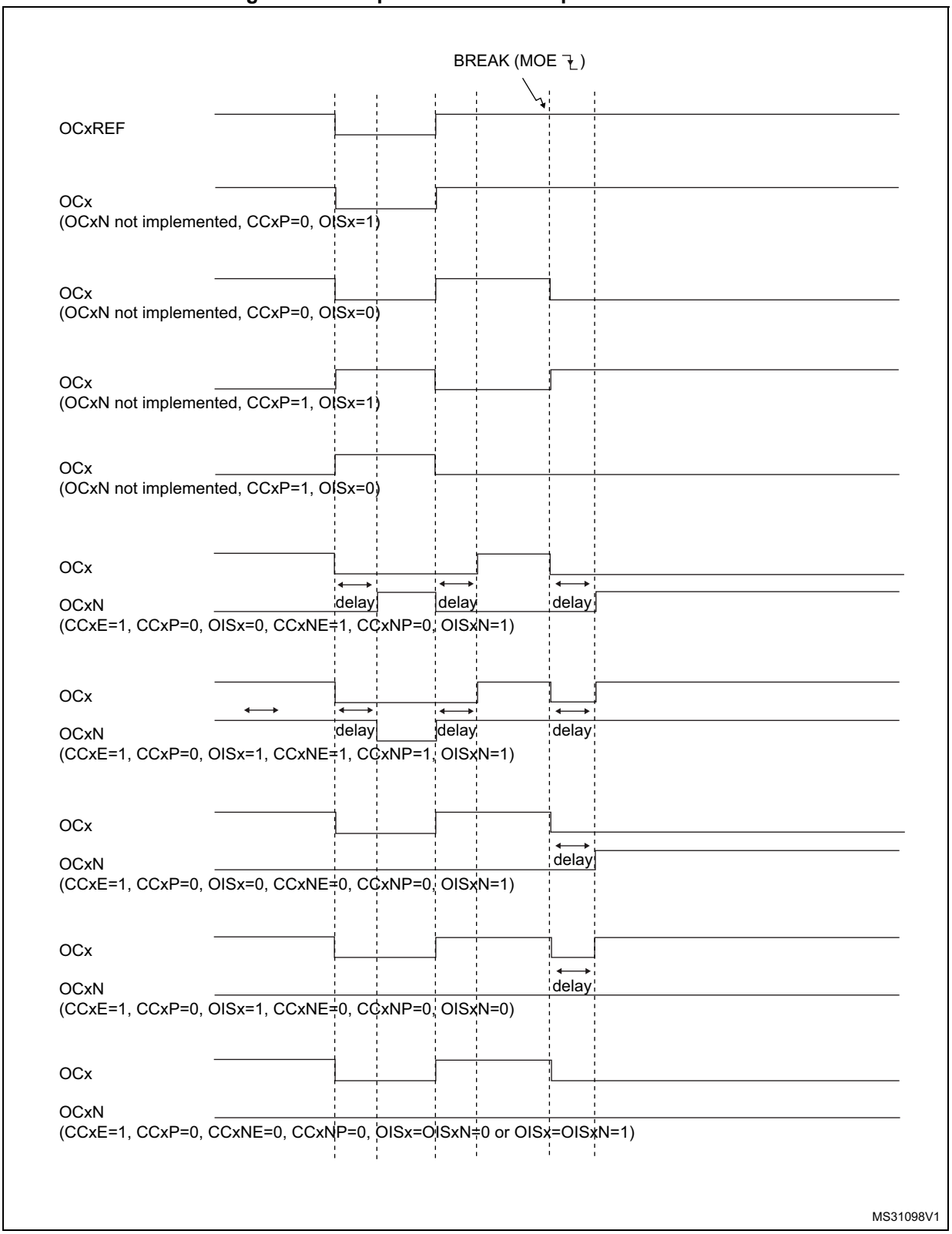

27.4.14 One-pulse mode

One-pulse mode (OPM) is a particular case of the previous modes. It allows the counter to be started in response to a stimulus and to generate a pulse with a programmable length after a programmable delay.

Starting the counter can be controlled through the slave mode controller. Generating the waveform can be done in output compare mode or PWM mode. You select One-pulse mode by setting the OPM bit in the TIMx_CR1 register. This makes the counter stop automatically at the next update event UEV.

A pulse can be correctly generated only if the compare value is different from the counter initial value. Before starting (when the timer is waiting for the trigger), the configuration must be:

- CNT < CCRx ≤ ARR (in particular, 0 < CCRx)

Figure 299. Example of one pulse mode.

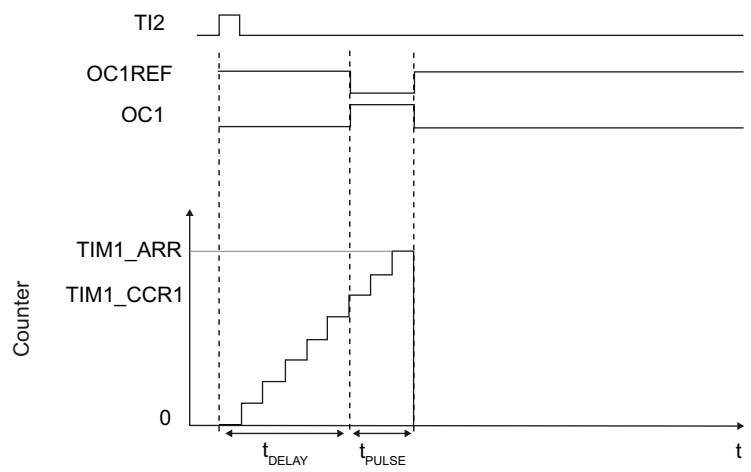

For example you may want to generate a positive pulse on OC1 with a length of t_{PULSE} and after a delay of t_{DELAY} as soon as a positive edge is detected on the TI2 input pin.

Let's use TI2FP2 as trigger 1:

1. Map TI2FP2 to TI2 by writing CC2S='01' in the TIMx_CCMR1 register.
2. TI2FP2 must detect a rising edge, write CC2P='0' and CC2NP='0' in the TIMx_CCER register.
3. Configure TI2FP2 as trigger for the slave mode controller (TRGI) by writing TS='110' in the TIMx_SMCR register.
4. TI2FP2 is used to start the counter by writing SMS to '110' in the TIMx_SMCR register (trigger mode).

The OPM waveform is defined by writing the compare registers (taking into account the clock frequency and the counter prescaler).

- The t_{DELAY} is defined by the value written in the TIMx_CCR1 register.
- The t_{PULSE} is defined by the difference between the auto-reload value and the compare value (TIMx_ARR - TIMx_CCR1).
- Let's say you want to build a waveform with a transition from '0' to '1' when a compare match occurs and a transition from '1' to '0' when the counter reaches the auto-reload value. To do this you enable PWM mode 2 by writing OC1M=111 in the TIMx_CCMR1 register. You can optionally enable the preload registers by writing OC1PE='1' in the TIMx_CCMR1 register and ARPE in the TIMx_CR1 register. In this case you have to write the compare value in the TIMx_CCR1 register, the auto-reload value in the TIMx_ARR register, generate an update by setting the UG bit and wait for external trigger event on TI2. CC1P is written to '0' in this example.

You only want 1 pulse, so you write '1' in the OPM bit in the TIMx_CR1 register to stop the counter at the next update event (when the counter rolls over from the auto-reload value back to 0).

Particular case: OCx fast enable

In One-pulse mode, the edge detection on TIx input set the CEN bit which enables the counter. Then the comparison between the counter and the compare value makes the output toggle. But several clock cycles are needed for these operations and it limits the minimum delay t_{DELAY} min we can get.

If you want to output a waveform with the minimum delay, you can set the OCxFE bit in the TIMx_CCMRx register. Then OCxRef (and OCx) are forced in response to the stimulus, without taking in account the comparison. Its new level is the same as if a compare match had occurred. OCxFE acts only if the channel is configured in PWM1 or PWM2 mode.

27.4.15 UIF bit remapping

The IUFREMAP bit in the TIMx_CR1 register forces a continuous copy of the Update Interrupt Flag UIF into bit 31 of the timer counter register (TIMxCNT[31]). This allows to atomically read both the counter value and a potential roll-over condition signaled by the UIFCPY flag. In particular cases, it can ease the calculations by avoiding race conditions caused for instance by a processing shared between a background task (counter reading) and an interrupt (Update Interrupt).

There is no latency between the assertions of the UIF and UIFCPY flags.

27.4.16 Timer input XOR function (TIM15 only)

The TI1S bit in the TIMx_CR2 register, allows the input filter of channel 1 to be connected to the output of a XOR gate, combining the two input pins TIMx_CH1 and TIMx_CH2.

The XOR output can be used with all the timer input functions such as trigger or input capture. It is useful for measuring the interval between the edges on two input signals, as shown in *Figure 300*.

Figure 300. Measuring time interval between edges on 2 signals

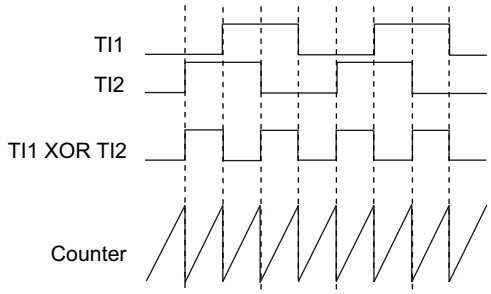

27.4.17 External trigger synchronization (TIM15 only)

The TIM timers are linked together internally for timer synchronization or chaining.

The TIM15 timer can be synchronized with an external trigger in several modes: Reset mode, Gated mode and Trigger mode.

Slave mode: Reset mode

The counter and its prescaler can be reinitialized in response to an event on a trigger input. Moreover, if the URS bit from the TIMx_CR1 register is low, an update event UEV is generated. Then all the preloaded registers (TIMx_ARR, TIMx_CCRx) are updated.

In the following example, the upcounter is cleared in response to a rising edge on TI1 input:

1. Configure the channel 1 to detect rising edges on TI1. Configure the input filter duration (in this example, we don't need any filter, so we keep IC1F=0000). The capture prescaler is not used for triggering, so you don't need to configure it. The CC1S bits select the input capture source only, CC1S = 01 in the TIMx_CCMR1 register. Write CC1P='0' and CC1NP='0' in the TIMx_CCER register to validate the polarity (and detect rising edges only).
2. Configure the timer in reset mode by writing SMS=100 in TIMx_SMCR register. Select TI1 as the input source by writing TS=101 in TIMx_SMCR register.
3. Start the counter by writing CEN=1 in the TIMx_CR1 register.

The counter starts counting on the internal clock, then behaves normally until TI1 rising edge. When TI1 rises, the counter is cleared and restarts from 0. In the meantime, the trigger flag is set (TIF bit in the TIMx_SR register) and an interrupt request, or a DMA request can be sent if enabled (depending on the TIE and TDE bits in TIMx_DIER register).

The following figure shows this behavior when the auto-reload register TIMx_ARR=0x36. The delay between the rising edge on TI1 and the actual reset of the counter is due to the resynchronization circuit on TI1 input.

Figure 301. Control circuit in reset mode

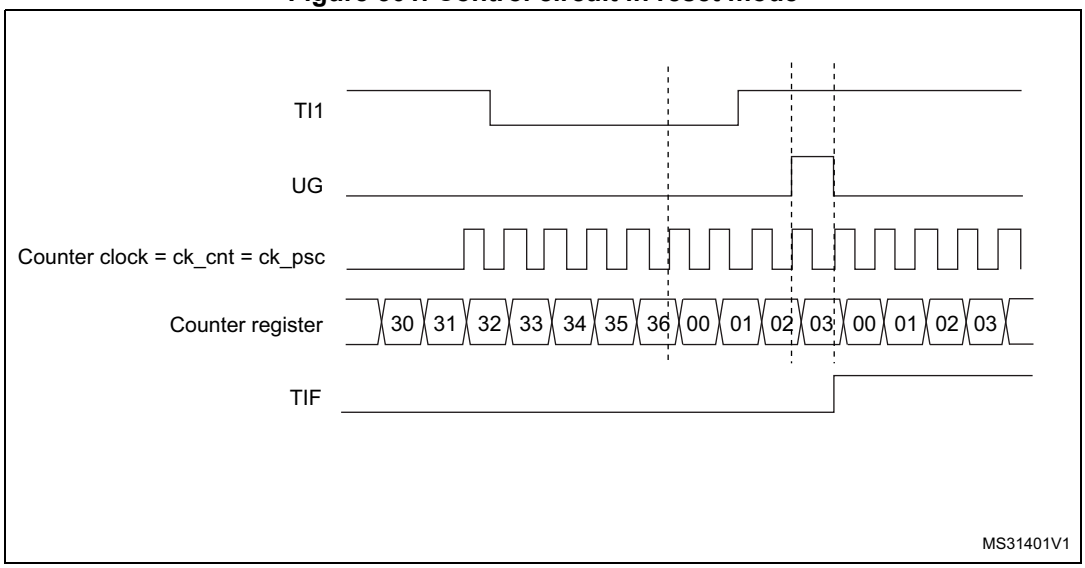

Slave mode: Gated mode

The counter can be enabled depending on the level of a selected input.

In the following example, the upcounter counts only when TI1 input is low:

1. Configure the channel 1 to detect low levels on TI1. Configure the input filter duration (in this example, we don't need any filter, so we keep IC1F=0000). The capture prescaler is not used for triggering, so you don't need to configure it. The CC1S bits select the input capture source only, CC1S=01 in TIMx_CCMR1 register. Write CC1P=1 and CC1NP = '0' in the TIMx_CCER register to validate the polarity (and detect low level only).
2. Configure the timer in gated mode by writing SMS=101 in TIMx_SMCR register. Select TI1 as the input source by writing TS=101 in TIMx_SMCR register.
3. Enable the counter by writing CEN=1 in the TIMx_CR1 register (in gated mode, the counter doesn't start if CEN=0, whatever is the trigger input level).

The counter starts counting on the internal clock as long as TI1 is low and stops as soon as TI1 becomes high. The TIF flag in the TIMx_SR register is set both when the counter starts or stops.

The delay between the rising edge on TI1 and the actual stop of the counter is due to the resynchronization circuit on TI1 input.

Figure 302. Control circuit in gated mode

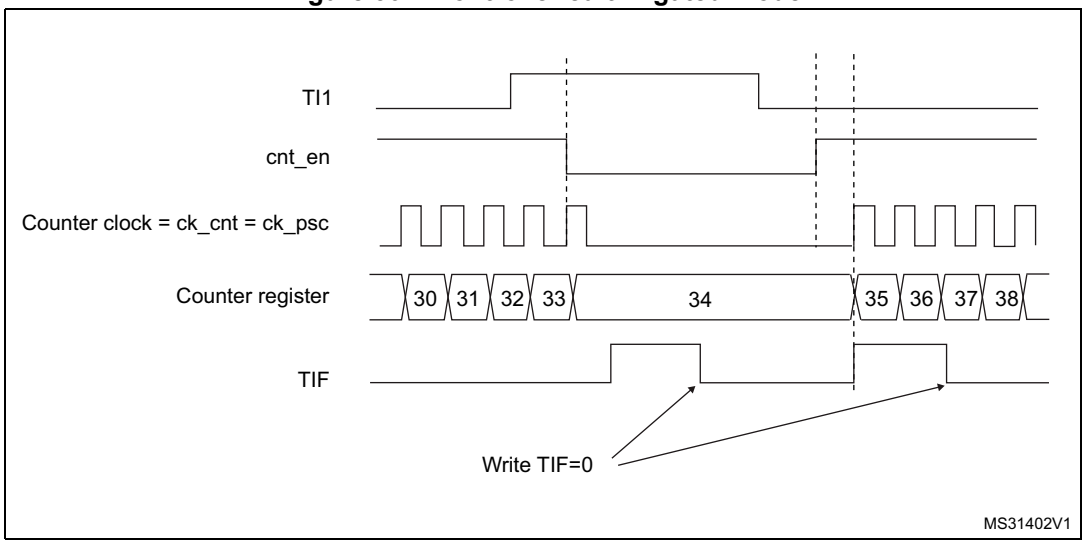

Slave mode: Trigger mode

The counter can start in response to an event on a selected input.

In the following example, the upcounter starts in response to a rising edge on TI2 input:

1. Configure the channel 2 to detect rising edges on TI2. Configure the input filter duration (in this example, we don't need any filter, so we keep IC2F=0000). The capture prescaler is not used for triggering, so you don't need to configure it. The CC2S bits are configured to select the input capture source only, CC2S=01 in TIMx_CCMR1 register. Write CC2P='1' and CC2NP='0' in the TIMx_CCER register to validate the polarity (and detect low level only).
2. Configure the timer in trigger mode by writing SMS=110 in the TIMx_SMCR register. Select TI2 as the input source by writing TS=110 in the TIMx_SMCR register.

When a rising edge occurs on TI2, the counter starts counting on the internal clock and the TIF flag is set.

The delay between the rising edge on TI2 and the actual start of the counter is due to the resynchronization circuit on TI2 input.

Figure 303. Control circuit in trigger mode

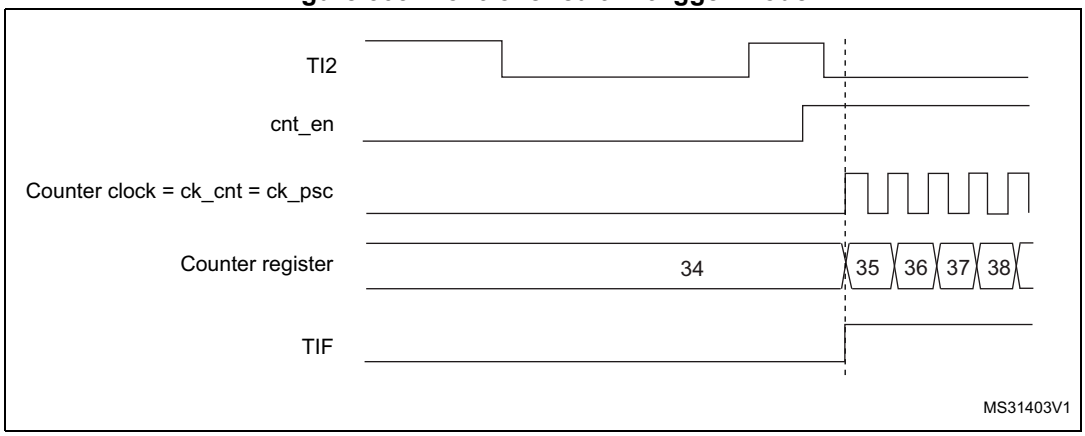

27.4.18 Slave mode: Combined reset + trigger mode

In this case, a rising edge of the selected trigger input (TRGI) reinitializes the counter, generates an update of the registers, and starts the counter.

This mode is used for one-pulse mode.

27.4.19 DMA burst mode

The TIMx timers have the capability to generate multiple DMA requests on a single event. The main purpose is to be able to re-program several timer registers multiple times without software overhead, but it can also be used to read several registers in a row, at regular intervals.

The DMA controller destination is unique and must point to the virtual register TIMx_DMAR. On a given timer event, the timer launches a sequence of DMA requests (burst). Each write into the TIMx_DMAR register is actually redirected to one of the timer registers.

The DBL[4:0] bits in the TIMx_DCR register set the DMA burst length. The timer recognizes a burst transfer when a read or a write access is done to the TIMx_DMAR address), i.e. the number of transfers (either in half-words or in bytes).

The DBA[4:0] bits in the TIMx_DCR registers define the DMA base address for DMA transfers (when read/write access are done through the TIMx_DMAR address). DBA is defined as an offset starting from the address of the TIMx_CR1 register.

Example:

00000: TIMx_CR1,

00001: TIMx_CR2,

00010: TIMx_SMCR,

For example, the timer DMA burst feature could be used to update the contents of the CCRx registers (x = 2, 3, 4) on an update event, with the DMA transferring half words into the CCRx registers.

This is done in the following steps:

1. Configure the corresponding DMA channel as follows:
   - DMA channel peripheral address is the DMAR register address
   - DMA channel memory address is the address of the buffer in the RAM containing the data to be transferred by DMA into the CCRx registers.
   - Number of data to transfer = 3 (See note below).
   - Circular mode disabled.
2. Configure the DCR register by configuring the DBA and DBL bit fields as follows: DBL = 3 transfers, DBA = 0xE.
3. Enable the TIMx update DMA request (set the UDE bit in the DIER register).
4. Enable TIMx
5. Enable the DMA channel

This example is for the case where every CCRx register is to be updated once. If every CCRx register is to be updated twice for example, the number of data to transfer should be 6. Let's take the example of a buffer in the RAM containing data1, data2, data3, data4, data5 and data6. The data is transferred to the CCRx registers as follows: on the first update DMA request, data1 is transferred to CCR2, data2 is transferred to CCR3, data3 is transferred to CCR4 and on the second update DMA request, data4 is transferred to CCR2, data5 is transferred to CCR3 and data6 is transferred to CCR4.

Note: A null value can be written to the reserved registers.

27.4.20 Timer synchronization (TIM15)

The TIMx timers are linked together internally for timer synchronization or chaining. Refer to *Section 26.3.19: Timer synchronization* for details.

Note: The clock of the slave timer must be enabled prior to receive events from the master timer, and must not be changed on-the-fly while triggers are received from the master timer.

27.4.21 Debug mode

When the microcontroller enters debug mode (Cortex®-M4 core halted), the TIMx counter either continues to work normally or stops, depending on DBG_TIMx_STOP configuration bit in DBG module. For more details, refer to *Section 43.16.2: Debug support for timers, RTC, watchdog, bxCAN and I2C*.

For safety purposes, when the counter is stopped (DBG_TIMx_STOP = 1), the outputs are disabled (as if the MOE bit was reset). The outputs can either be forced to an inactive state (OSSI bit = 1), or have their control taken over by the GPIO controller (OSSI bit = 0) to force them to Hi-Z.

27.5 TIM15 registers

Refer to *Section 1.1* for a list of abbreviations used in register descriptions.

27.5.1 TIM15 control register 1 (TIM15_CR1)

Address offset: 0x00

Reset value: 0x0000

15	14	13	12	11	10	9	8	7	6	5	4	3	2	1	0
Res.	Res.	Res.	Res.	UIF RE-MAP	Res.	CKD[1:0]		ARPE	Res.	Res.	Res.	OPM	URS	UDIS	CEN
				rw		rw	rw	rw				rw	rw	rw	rw

Bits 15:12 Reserved, must be kept at reset value.

Bit 11 **UIFREMAP**: UIF status bit remapping

0: No remapping. UIF status bit is not copied to TIMx_CNT register bit 31.
1: Remapping enabled. UIF status bit is copied to TIMx_CNT register bit 31.

Bit 10 Reserved, must be kept at reset value.

Bits 9:8 **CKD[1:0]**: Clock division

This bitfield indicates the division ratio between the timer clock (CK_INT) frequency and the dead-time and sampling clock (t_{DTS}) used by the dead-time generators and the digital filters (TIx)

00: $t_{DTS} = t_{CK_INT}$
01: $t_{DTS} = 2*t_{CK_INT}$
10: $t_{DTS} = 4*t_{CK_INT}$
11: Reserved, do not program this value

Bit 7 **ARPE**: Auto-reload preload enable

0: TIMx_ARR register is not buffered
1: TIMx_ARR register is buffered

Bits 6:4 Reserved, must be kept at reset value.

Bit 3 **OPM**: One-pulse mode

0: Counter is not stopped at update event
1: Counter stops counting at the next update event (clearing the bit CEN)

Bit 2 **URS**: Update request source

This bit is set and cleared by software to select the UEV event sources.

0: Any of the following events generate an update interrupt if enabled. These events can be:

- Counter overflow/underflow
- Setting the UG bit
- Update generation through the slave mode controller

1: Only counter overflow/underflow generates an update interrupt if enabled

Bit 1 **UDIS**: Update disable

This bit is set and cleared by software to enable/disable UEV event generation.

0: UEV enabled. The Update (UEV) event is generated by one of the following events:

- Counter overflow/underflow
- Setting the UG bit
- Update generation through the slave mode controller

Buffered registers are then loaded with their preload values.

1: UEV disabled. The Update event is not generated, shadow registers keep their value (ARR, PSC, CCRx). However the counter and the prescaler are reinitialized if the UG bit is set or if a hardware reset is received from the slave mode controller.

Bit 0 **CEN**: Counter enable

0: Counter disabled

1: Counter enabled

Note: External clock and gated mode can work only if the CEN bit has been previously set by software. However trigger mode can set the CEN bit automatically by hardware.

27.5.2 TIM15 control register 2 (TIM15_CR2)

Address offset: 0x04

Reset value: 0x0000

15	14	13	12	11	10	9	8	7	6	5	4	3	2	1	0
Res.	Res.	Res.	Res.	Res.	OIS2	OIS1N	OIS1	TI1S	MMS[2:0]			CCDS	CCUS	Res.	CCPC
					rw	rw	rw	rw	rw	rw	rw	rw	rw		rw

Bits 15:11 Reserved, must be kept at reset value.

Bit 10 **OIS2:** Output idle state 2 (OC2 output)

0: OC2=0 when MOE=0

1: OC2=1 when MOE=0

Note: This bit cannot be modified as long as LOCK level 1, 2 or 3 has been programmed (LOCK bits in the TIMx_BKR register).

Bit 9 **OIS1N**: Output Idle state 1 (OC1N output)

0: OC1N=0 after a dead-time when MOE=0

1: OC1N=1 after a dead-time when MOE=0

Note: This bit can not be modified as long as LOCK level 1, 2 or 3 has been programmed (LOCK bits in TIMx_BKR register).

Bit 8 **OIS1**: Output Idle state 1 (OC1 output)

0: OC1=0 (after a dead-time if OC1N is implemented) when MOE=0

1: OC1=1 (after a dead-time if OC1N is implemented) when MOE=0

Note: This bit can not be modified as long as LOCK level 1, 2 or 3 has been programmed (LOCK bits in TIMx_BKR register).

Bit 7 **TI1S**: TI1 selection

0: The TIMx_CH1 pin is connected to TI1 input

1: The TIMx_CH1, CH2 pins are connected to the TI1 input (XOR combination)

Bits 6:4 **MMS[1:0]**: Master mode selection

These bits allow to select the information to be sent in master mode to slave timers for synchronization (TRGO). The combination is as follows:

000: **Reset** - the UG bit from the TIMx_EGR register is used as trigger output (TRGO). If the reset is generated by the trigger input (slave mode controller configured in reset mode) then the signal on TRGO is delayed compared to the actual reset.

001: **Enable** - the Counter Enable signal CNT_EN is used as trigger output (TRGO). It is useful to start several timers at the same time or to control a window in which a slave timer is enable. The Counter Enable signal is generated by a logic OR between CEN control bit and the trigger input when configured in gated mode. When the Counter Enable signal is controlled by the trigger input, there is a delay on TRGO, except if the master/slave mode is selected (see the MSM bit description in TIMx_SMCR register).

010: **Update** - The update event is selected as trigger output (TRGO). For instance a master timer can then be used as a prescaler for a slave timer.

011: **Compare Pulse** - The trigger output send a positive pulse when the CC1IF flag is to be set (even if it was already high), as soon as a capture or a compare match occurred. (TRGO).

100: **Compare** - OC1REF signal is used as trigger output (TRGO).

101: **Compare** - OC2REF signal is used as trigger output (TRGO).

Bit 3 **CCDS**: Capture/compare DMA selection

0: CCx DMA request sent when CCx event occurs

1: CCx DMA requests sent when update event occurs

Bit 2 **CCUS**: Capture/compare control update selection

0: When capture/compare control bits are preloaded (CCPC=1), they are updated by setting the COMG bit only.

1: When capture/compare control bits are preloaded (CCPC=1), they are updated by setting the COMG bit or when an rising edge occurs on TRGI.

Note: This bit acts only on channels that have a complementary output.

Bit 1 Reserved, must be kept at reset value.

Bit 0 **CCPC**: Capture/compare preloaded control

0: CCxE, CCxNE and OCxM bits are not preloaded

1: CCxE, CCxNE and OCxM bits are preloaded, after having been written, they are updated only when a commutation event (COM) occurs (COMG bit set or rising edge detected on TRGI, depending on the CCUS bit).

Note: This bit acts only on channels that have a complementary output.

27.5.3 TIM15 slave mode control register (TIM15_SMCR)

Address offset: 0x08

Reset value: 0x0000 0000

31	30	29	28	27	26	25	24	23	22	21	20	19	18	17	16
Res.	Res.	Res.	Res.	Res.	Res.	Res.	Res.	Res.	Res.	Res.	Res.	Res.	Res.	Res.	SMS[3]
															rw

15	14	13	12	11	10	9	8	7	6	5	4	3	2	1	0
Res.	Res.	Res.	Res.	Res.	Res.	Res.	Res.	MSM	TS[2:0]			Res.	SMS[2:0]		
								rw	rw	rw	rw		rw	rw	rw

Bits 31:17 Reserved, must be kept at reset value.

Bit 16 **SMS[3]:** Slave mode selection - bit 3

Refer to SMS description - bits 2:0.

Bits 15:8 Reserved, must be kept at reset value.

Bit 7 **MSM:** Master/slave mode

0: No action

1: The effect of an event on the trigger input (TRGI) is delayed to allow a perfect synchronization between the current timer and its slaves (through TRGO). It is useful if we want to synchronize several timers on a single external event.

Bits 6:4 **TS[2:0]:** Trigger selection

This bit field selects the trigger input to be used to synchronize the counter.

000: Internal Trigger 0 (ITR0)
001: Internal Trigger 1 (ITR1)
010: Internal Trigger 2 (ITR2)
011: Internal Trigger 3 (ITR3)
100: TI1 Edge Detector (TI1F_ED)
101: Filtered Timer Input 1 (TI1FP1)
110: Filtered Timer Input 2 (TI2FP2)

See *Table 118: TIMx Internal trigger connection on page 826* for more details on ITRx meaning for each Timer.

Note: These bits must be changed only when they are not used (e.g. when SMS=000) to avoid wrong edge detections at the transition.

Bit 3 Reserved, must be kept at reset value.

Bits 2:0 **SMS:** Slave mode selection

When external signals are selected the active edge of the trigger signal (TRGI) is linked to the polarity selected on the external input (see Input Control register and Control Register description.

0000: Slave mode disabled - if CEN = '1' then the prescaler is clocked directly by the internal clock.
0001: Reserved
0010: Reserved
0011: Reserved
0100: Reset Mode - Rising edge of the selected trigger input (TRGI) reinitializes the counter and generates an update of the registers.
0101: Gated Mode - The counter clock is enabled when the trigger input (TRGI) is high. The counter stops (but is not reset) as soon as the trigger becomes low. Both start and stop of the counter are controlled.
0110: Trigger Mode - The counter starts at a rising edge of the trigger TRGI (but it is not reset). Only the start of the counter is controlled.
0111: External Clock Mode 1 - Rising edges of the selected trigger (TRGI) clock the counter.
1000: Combined reset + trigger mode - Rising edge of the selected trigger input (TRGI) reinitializes the counter, generates an update of the registers and starts the counter.
Other codes: reserved.

Note: The gated mode must not be used if TI1F_ED is selected as the trigger input (TS='100'). Indeed, TI1F_ED outputs 1 pulse for each transition on TI1F, whereas the gated mode checks the level of the trigger signal.

Note: The clock of the slave timer must be enabled prior to receive events from the master timer, and must not be changed on-the-fly while triggers are received from the master timer.

Table 118. TIMx Internal trigger connection

Slave TIM	ITR0 (TS = 000)	ITR1 (TS = 001)	ITR2 (TS = 010)	ITR3 (TS = 011)
TIM15	TIM1	Reserved	TIM16 OC1	Reserved

27.5.4 TIM15 DMA/interrupt enable register (TIM15_DIER)

Address offset: 0x0C

Reset value: 0x0000

15	14	13	12	11	10	9	8	7	6	5	4	3	2	1	0
Res.	TDE	COMDE	Res.	Res.	CC2DE	CC1DE	UDE	BIE	TIE	COMIE	Res.	Res.	CC2IE	CC1IE	UIE
	rw	rw			rw	rw	rw	rw	rw	rw			rw	rw	rw

Bit 15 Reserved, must be kept at reset value.

Bit 14 **TDE**: Trigger DMA request enable

0: Trigger DMA request disabled
1: Trigger DMA request enabled

Bit 13 **COMDE**: COM DMA request enable

0: COM DMA request disabled
1: COM DMA request enabled

Bits 12:11 Reserved, must be kept at reset value.

Bit 10 **CC2DE**: Capture/Compare 2 DMA request enable
0: CC2 DMA request disabled
1: CC2 DMA request enabled

Bit 9 **CC1DE**: Capture/Compare 1 DMA request enable
0: CC1 DMA request disabled
1: CC1 DMA request enabled

Bit 8 **UDE**: Update DMA request enable
0: Update DMA request disabled
1: Update DMA request enabled

Bit 7 **BIE**: Break interrupt enable
0: Break interrupt disabled
1: Break interrupt enabled

Bit 6 **TIE**: Trigger interrupt enable
0: Trigger interrupt disabled
1: Trigger interrupt enabled

Bit 5 **COMIE:** COM interrupt enable
0: COM interrupt disabled
1: COM interrupt enabled

Bits 4:3 Reserved, must be kept at reset value.

Bit 2 **CC2IE**: Capture/Compare 2 interrupt enable
0: CC2 interrupt disabled
1: CC2 interrupt enabled

Bit 1 **CC1IE**: Capture/Compare 1 interrupt enable
0: CC1 interrupt disabled
1: CC1 interrupt enabled

Bit 0 **UIE**: Update interrupt enable
0: Update interrupt disabled
1: Update interrupt enabled

27.5.5 TIM15 status register (TIM15_SR)

Address offset: 0x10

Reset value: 0x0000

15	14	13	12	11	10	9	8	7	6	5	4	3	2	1	0
Res.	Res.	Res.	Res.	Res.	CC2OF	CC1OF	Res.	BIF	TIF	COMIF	Res.	Res.	CC2IF	CC1IF	UIF
					rc_w0	rc_w0		rc_w0	rc_w0	rc_w0			rc_w0	rc_w0	rc_w0

Bits 15:11 Reserved, must be kept at reset value.

Bit 10 **CC2OF**: Capture/Compare 2 overcapture flag
Refer to CC1OF description

Bit 9 **CC1OF**: Capture/Compare 1 overcapture flag
This flag is set by hardware only when the corresponding channel is configured in input capture mode. It is cleared by software by writing it to ‘0’.
0: No overcapture has been detected
1: The counter value has been captured in TIMx_CCR1 register while CC1IF flag was already set

Bit 8 Reserved, must be kept at reset value.

Bit 7 **BIF**: Break interrupt flag

This flag is set by hardware as soon as the break input goes active. It can be cleared by software if the break input is not active.

0: No break event occurred
1: An active level has been detected on the break input

Bit 6 **TIF**: Trigger interrupt flag

This flag is set by hardware on trigger event (active edge detected on TRGI input when the slave mode controller is enabled in all modes but gated mode, both edges in case gated mode is selected). It is set when the counter starts or stops when gated mode is selected. It is cleared by software.

0: No trigger event occurred
1: Trigger interrupt pending

Bit 5 **COMIF:** COM interrupt flag

This flag is set by hardware on a COM event (once the capture/compare control bits –CCxE, CCxNE, OCxM– have been updated). It is cleared by software.

0: No COM event occurred
1: COM interrupt pending

Bits 5:3 Reserved, must be kept at reset value.

Bit 2 **CC2IF**: Capture/Compare 2 interrupt flag

refer to CC1IF description

Bit 1 **CC1IF**: Capture/Compare 1 interrupt flag

If channel CC1 is configured as output: This flag is set by hardware when the counter matches the compare value. It is cleared by software.

0: No match.
1: The content of the counter TIMx_CNT matches the content of the TIMx_CCR1 register. When the contents of TIMx_CCR1 are greater than the contents of TIMx_ARR, the CC1IF bit goes high on the counter overflow.

If channel CC1 is configured as input: This bit is set by hardware on a capture. It is cleared by software or by reading the TIMx_CCR1 register.

0: No input capture occurred
1: The counter value has been captured in TIMx_CCR1 register (An edge has been detected on IC1 which matches the selected polarity)

Bit 0 **UIF**: Update interrupt flag

This bit is set by hardware on an update event. It is cleared by software.

0: No update occurred.
1: Update interrupt pending. This bit is set by hardware when the registers are updated:

– At overflow regarding the repetition counter value (update if repetition counter = 0) and if the UDIS=0 in the TIMx_CR1 register.
– When CNT is reinitialized by software using the UG bit in TIMx_EGR register, if URS=0 and UDIS=0 in the TIMx_CR1 register.
– When CNT is reinitialized by a trigger event (refer to *Section 27.5.3: TIM15 slave mode control register (TIM15_SMCR)*), if URS=0 and UDIS=0 in the TIMx_CR1 register.

27.5.6 TIM15 event generation register (TIM15_EGR)

Address offset: 0x14

Reset value: 0x0000

15	14	13	12	11	10	9	8	7	6	5	4	3	2	1	0
Res.	Res.	Res.	Res.	Res.	Res.	Res.	Res.	BG	TG	COMG	Res.	Res.	CC2G	CC1G	UG
								w	w	rw			w	w	w

Bits 15:8 Reserved, must be kept at reset value.

Bit 7 **BG**: Break generation

This bit is set by software in order to generate an event, it is automatically cleared by hardware.

0: No action

1: A break event is generated. MOE bit is cleared and BIF flag is set. Related interrupt or DMA transfer can occur if enabled.

Bit 6 **TG**: Trigger generation

This bit is set by software in order to generate an event, it is automatically cleared by hardware.

0: No action

1: The TIF flag is set in TIMx_SR register. Related interrupt or DMA transfer can occur if enabled

Bit 5 **COMG:** Capture/Compare control update generation

This bit can be set by software, it is automatically cleared by hardware.

0: No action

1: When the CCPC bit is set, it is possible to update the CCxE, CCxNE and OCxM bits

Note: This bit acts only on channels that have a complementary output.

Bits 4:3 Reserved, must be kept at reset value.

Bit 2 **CC2G**: Capture/Compare 2 generation

Refer to CC1G description

Bit 1 **CC1G**: Capture/Compare 1 generation

This bit is set by software in order to generate an event, it is automatically cleared by hardware.

0: No action

1: A capture/compare event is generated on channel 1:

If channel CC1 is configured as output:

CC1IF flag is set, Corresponding interrupt or DMA request is sent if enabled.

If channel CC1 is configured as input:

The current value of the counter is captured in TIMx_CCR1 register. The CC1IF flag is set, the corresponding interrupt or DMA request is sent if enabled. The CC1OF flag is set if the CC1IF flag was already high.

Bit 0 **UG**: Update generation

This bit can be set by software, it is automatically cleared by hardware.

0: No action.

1: Reinitialize the counter and generates an update of the registers. Note that the prescaler counter is cleared too (anyway the prescaler ratio is not affected).

27.5.7 TIM15 capture/compare mode register 1 (TIM15_CCMR1)

Address offset: 0x18

Reset value: 0x0000 0000

The channels can be used in input (capture mode) or in output (compare mode). The direction of a channel is defined by configuring the corresponding CCxS bits. All the other bits of this register have a different function in input and in output mode. For a given bit, OCxx describes its function when the channel is configured in output, ICxx describes its function when the channel is configured in input. So you must take care that the same bit can have a different meaning for the input stage and for the output stage.

31	30	29	28	27	26	25	24	23	22	21	20	19	18	17	16
Res.	Res.	Res.	Res.	Res.	Res.	Res.	OC2M [3] / Res.	Res.	Res.	Res.	Res.	Res.	Res.	Res.	OC1M [3] / Res.
							rw								rw

15	14	13	12	11	10	9	8	7	6	5	4	3	2	1	0
Res	OC2M[2:0]			OC2 PE	OC2 FE	CC2S[1:0]		Res.	OC1M[2:0]			OC1 PE	OC1 FE	CC1S[1:0]	
IC2F[3:0]				IC2PSC[1:0]				IC1F[3:0]				IC1PSC[1:0]			
rw	rw	rw	rw	rw	rw	rw	rw	rw	rw	rw	rw	rw	rw	rw	rw

Output compare mode:

Bits 31:25 Reserved, always read as 0

Bit 24 **OC2M[3]**: Output Compare 2 mode - bit 3

Bits 23:17 Reserved, always read as 0

Bit 16 **OC1M[3]**: Output Compare 1 mode - bit 3
refer to OC1M description on bits 6:4

Bit 15 Reserved, always read as 0

Bits 14:12 **OC2M[2:0]**: Output Compare 2 mode

Bit 11 **OC2PE**: Output Compare 2 preload enable

Bit 10 **OC2FE**: Output Compare 2 fast enable

Bits 9:8 **CC2S[1:0]**: Capture/Compare 2 selection
This bit-field defines the direction of the channel (input/output) as well as the used input.
00: CC2 channel is configured as output.
01: CC2 channel is configured as input, IC2 is mapped on TI2.
10: CC2 channel is configured as input, IC2 is mapped on TI1.
11: CC2 channel is configured as input, IC2 is mapped on TRC. This mode is working only if an internal trigger input is selected through the TS bit (TIMx_SMCR register)

Note: CC2S bits are writable only when the channel is OFF (CC2E = '0' in TIMx_CCER).

Bit 7 Reserved, always read as 0

Bits 6:4 **OC1M**: Output Compare 1 mode

These bits define the behavior of the output reference signal OC1REF from which OC1 and OC1N are derived. OC1REF is active high whereas OC1 and OC1N active level depends on CC1P and CC1NP bits.

0000: Frozen - The comparison between the output compare register TIMx_CCR1 and the counter TIMx_CNT has no effect on the outputs.
0001: Set channel 1 to active level on match. OC1REF signal is forced high when the counter TIMx_CNT matches the capture/compare register 1 (TIMx_CCR1).
0010: Set channel 1 to inactive level on match. OC1REF signal is forced low when the counter TIMx_CNT matches the capture/compare register 1 (TIMx_CCR1).
0011: Toggle - OC1REF toggles when TIMx_CNT=TIMx_CCR1.
0100: Force inactive level - OC1REF is forced low.
0101: Force active level - OC1REF is forced high.
0110: PWM mode 1 - Channel 1 is active as long as TIMx_CNT<TIMx_CCR1 else inactive.
0111: PWM mode 2 - Channel 1 is inactive as long as TIMx_CNT<TIMx_CCR1 else active.
1000: Reserved,
1001: Reserved,
1010: Reserved,
1011: Reserved,
1100: Combined PWM mode 1 - OC1REF has the same behavior as in PWM mode 1. OC1REFC is the logical OR between OC1REF and OC2REF.
1101: Combined PWM mode 2 - OC1REF has the same behavior as in PWM mode 2. OC1REFC is the logical AND between OC1REF and OC2REF.
1110: Reserved,
1111: Reserved,

*Note: **1:** These bits can not be modified as long as LOCK level 3 has been programmed (LOCK bits in TIMx_BDTR register) and CC1S='00' (the channel is configured in output).*

***2:** In PWM mode, the OCREF level changes only when the result of the comparison changes or when the output compare mode switches from "frozen" mode to "PWM" mode.*

***3**: On channels that have a complementary output, this bit field is preloaded. If the CCPC bit is set in the TIMx_CR2 register then the OC1M active bits take the new value from the preloaded bits only when a COM event is generated.*

Bit 3 **OC1PE**: Output Compare 1 preload enable

0: Preload register on TIMx_CCR1 disabled. TIMx_CCR1 can be written at anytime, the new value is taken in account immediately.
1: Preload register on TIMx_CCR1 enabled. Read/Write operations access the preload register. TIMx_CCR1 preload value is loaded in the active register at each update event.

*Note: **1:** These bits can not be modified as long as LOCK level 3 has been programmed (LOCK bits in TIMx_BDTR register) and CC1S='00' (the channel is configured in output).*

***2:** The PWM mode can be used without validating the preload register only in one pulse mode (OPM bit set in TIMx_CR1 register). Else the behavior is not guaranteed.*

Bit 2 **OC1FE**: Output Compare 1 fast enable

This bit is used to accelerate the effect of an event on the trigger in input on the CC output.

0: CC1 behaves normally depending on counter and CCR1 values even when the trigger is ON. The minimum delay to activate CC1 output when an edge occurs on the trigger input is 5 clock cycles.
1: An active edge on the trigger input acts like a compare match on CC1 output. Then, OC is set to the compare level independently of the result of the comparison. Delay to sample the trigger input and to activate CC1 output is reduced to 3 clock cycles. OCFE acts only if the channel is configured in PWM1 or PWM2 mode.

Bits 1:0 **CC1S**: Capture/Compare 1 selection

This bit-field defines the direction of the channel (input/output) as well as the used input.

00: CC1 channel is configured as output.
01: CC1 channel is configured as input, IC1 is mapped on TI1.
10: CC1 channel is configured as input, IC1 is mapped on TI2.
11: CC1 channel is configured as input, IC1 is mapped on TRC. This mode is working only if an internal trigger input is selected through TS bit (TIMx_SMCR register)

Note: CC1S bits are writable only when the channel is OFF (CC1E = '0' in TIMx_CCER).

Input capture mode

Bits 31:16 Reserved, always read as 0

Bits 15:12 **IC2F**: Input capture 2 filter

Bits 11:10 **IC2PSC[1:0]**: Input capture 2 prescaler

Bits 9:8 **CC2S**: Capture/Compare 2 selection

This bit-field defines the direction of the channel (input/output) as well as the used input.

00: CC2 channel is configured as output
01: CC2 channel is configured as input, IC2 is mapped on TI2
10: CC2 channel is configured as input, IC2 is mapped on TI1
11: CC2 channel is configured as input, IC2 is mapped on TRC. This mode is working only if an internal trigger input is selected through TS bit (TIMx_SMCR register)

Note: CC2S bits are writable only when the channel is OFF (CC2E = '0' in TIMx_CCER).

Bits 7:4 **IC1F[3:0]**: Input capture 1 filter

This bit-field defines the frequency used to sample TI1 input and the length of the digital filter applied to TI1. The digital filter is made of an event counter in which N consecutive events are needed to validate a transition on the output:

0000: No filter, sampling is done at f_{DTS}
0001: $f_{SAMPLING}=f_{CK_INT}$, N=2
0010: $f_{SAMPLING}=f_{CK_INT}$, N=4
0011: $f_{SAMPLING}=f_{CK_INT}$, N=8
0100: $f_{SAMPLING}=f_{DTS}/2$, N=6
0101: $f_{SAMPLING}=f_{DTS}/2$, N=8
0110: $f_{SAMPLING}=f_{DTS}/4$, N=6
0111: $f_{SAMPLING}=f_{DTS}/4$, N=8
1000: $f_{SAMPLING}=f_{DTS}/8$, N=6
1001: $f_{SAMPLING}=f_{DTS}/8$, N=8
1010: $f_{SAMPLING}=f_{DTS}/16$, N=5
1011: $f_{SAMPLING}=f_{DTS}/16$, N=6
1100: $f_{SAMPLING}=f_{DTS}/16$, N=8
1101: $f_{SAMPLING}=f_{DTS}/32$, N=5
1110: $f_{SAMPLING}=f_{DTS}/32$, N=6
1111: $f_{SAMPLING}=f_{DTS}/32$, N=8

Bits 3:2 **IC1PSC**: Input capture 1 prescaler

This bit-field defines the ratio of the prescaler acting on CC1 input (IC1). The prescaler is reset as soon as CC1E='0' (TIMx_CCER register).

00: no prescaler, capture is done each time an edge is detected on the capture input
01: capture is done once every 2 events
10: capture is done once every 4 events
11: capture is done once every 8 events

Bits 1:0 **CC1S**: Capture/Compare 1 Selection

This bit-field defines the direction of the channel (input/output) as well as the used input.

00: CC1 channel is configured as output
01: CC1 channel is configured as input, IC1 is mapped on TI1
10: CC1 channel is configured as input, IC1 is mapped on TI2
11: CC1 channel is configured as input, IC1 is mapped on TRC. This mode is working only if an internal trigger input is selected through TS bit (TIMx_SMCR register)

Note: CC1S bits are writable only when the channel is OFF (CC1E = '0' in TIMx_CCER).

27.5.8 TIM15 capture/compare enable register (TIM15_CCER)

Address offset: 0x20

Reset value: 0x0000

15	14	13	12	11	10	9	8	7	6	5	4	3	2	1	0
Res	Res	Res	Res	Res	Res	Res	Res	CC2NP	Res	CC2P	CC2E	CC1NP	CC1NE	CC1P	CC1E
								rw		rw	rw	rw	rw	rw	rw

Bits 15:8 Reserved, must be kept at reset value.

Bit 7 **CC2NP**: Capture/Compare 2 complementary output polarity
Refer to CC1NP description

Bit 6 Reserved, must be kept at reset value.

Bit 5 **CC2P**: Capture/Compare 2 output polarity
Refer to CC1P description

Bit 4 **CC2E**: Capture/Compare 2 output enable
Refer to CC1E description

Bit 3 **CC1NP**: Capture/Compare 1 complementary output polarity
CC1 channel configured as output:
0: OC1N active high
1: OC1N active low
CC1 channel configured as input:
This bit is used in conjunction with CC1P to define the polarity of TI1FP1 and TI2FP1. Refer to CC1P description.

Note: 1.This bit is not writable as soon as LOCK level 2 or 3 has been programmed (LOCK bits in TIMx_BDTR register) and CC1S="00" (the channel is configured in output).
2. On channels that have a complementary output, this bit is preloaded. If the CCPC bit is set in the TIMx_CR2 register then the CC1NP active bit takes the new value from the preloaded bit only when a Commutation event is generated.

Bit 2 **CC1NE**: Capture/Compare 1 complementary output enable
0: Off - OC1N is not active. OC1N level is then function of MOE, OSSI, OSSR, OIS1, OIS1N and CC1E bits.
1: On - OC1N signal is output on the corresponding output pin depending on MOE, OSSI, OSSR, OIS1, OIS1N and CC1E bits.

Bit 1 **CC1P**: Capture/Compare 1 output polarity
CC1 channel configured as output:
0: OC1 active high
1: OC1 active low
CC1 channel configured as input: The CC1NP/CC1P bits select the polarity of TI1FP1 and TI2FP1 for trigger or capture operations.
00: non-inverted/rising edge. The circuit is sensitive to TIxFP1 rising edge (capture or trigger operations in reset, external clock or trigger mode), TIxFP1 is not inverted (trigger operation in gated mode).
01: inverted/falling edge. The circuit is sensitive to TIxFP1 falling edge (capture or trigger operations in reset, external clock or trigger mode), TIxFP1 is inverted (trigger operation in gated mode).
10: reserved, do not use this configuration.
11: non-inverted/both edges. The circuit is sensitive to both TIxFP1 rising and falling edges (capture or trigger operations in reset, external clock or trigger mode), TIxFP1 is not inverted (trigger operation in gated mode).

Note: 1. This bit is not writable as soon as LOCK level 2 or 3 has been programmed (LOCK bits in TIMx_BDTR register).
2. On channels that have a complementary output, this bit is preloaded. If the CCPC bit is set in the TIMx_CR2 register then the CC1P active bit takes the new value from the preloaded bit only when a Commutation event is generated.

Bit 0 **CC1E**: Capture/Compare 1 output enable

CC1 channel configured as output:

0: Off - OC1 is not active. OC1 level is then function of MOE, OSSI, OSSR, OIS1, OIS1N and CC1NE bits.

1: On - OC1 signal is output on the corresponding output pin depending on MOE, OSSI, OSSR, OIS1, OIS1N and CC1NE bits.

CC1 channel configured as input: This bit determines if a capture of the counter value can actually be done into the input capture/compare register 1 (TIMx_CCR1) or not.

0: Capture disabled

1: Capture enabled

Table 119. Output control bits for complementary OCx and OCxN channels with break feature (TIM15)

Control bits					Output states[1]	
MOE bit	OSSI bit	OSSR bit	CCxE bit	CCxNE bit	OCx output state	OCxN output state
1	X	X	0	0	Output Disabled (not driven by the timer: Hi-Z) OCx=0 OCxN=0, OCxN_EN=0	
		0	0	1	Output Disabled (not driven by the timer: Hi-Z) OCx=0	OCxREF + Polarity OCxN=OCxREF XOR CCxNP
		0	1	0	OCxREF + Polarity OCx=OCxREF XOR CCxP	Output Disabled (not driven by the timer: Hi-Z) OCxN=0
		X	1	1	OCREF + Polarity + dead-time	Complementary to OCREF (not OCREF) + Polarity + dead-time
		1	0	1	Off-State (output enabled with inactive state) OCx=CCxP	OCxREF + Polarity OCxN=OCxREF XOR CCxNP
		1	1	0	OCxREF + Polarity OCx=OCxREF xor CCxP, OCx_EN=1	Off-State (output enabled with inactive state) OCxN=CCxNP, OCxN_EN=1
0	0	X	X	X	Output disabled (not driven by the timer anymore). The output state is defined by the GPIO controller and can be High, Low or Hi-Z.	
	1		0	0		
			0	1	Off-State (output enabled with inactive state) Asynchronously: OCx=CCxP, OCxN=CCxNP Then if the clock is present: OCx=OISx and OCxN=OISxN after a dead-time, assuming that OISx and OISxN do not correspond to OCX and OCxN both in active state	
			1	0		
			1	1		

1. When both outputs of a channel are not used (control taken over by GPIO controller), the OISx, OISxN, CCxP and CCxNP bits must be kept cleared.

Note: The state of the external I/O pins connected to the complementary OCx and OCxN channels depends on the OCx and OCxN channel state and AFIO registers.

27.5.9 TIM15 counter (TIM15_CNT)

Address offset: 0x24

Reset value: 0x0000 0000

31	30	29	28	27	26	25	24	23	22	21	20	19	18	17	16
UIF CPY	Res	Res	Res	Res	Res	Res	Res	Res	Res	Res	Res	Res	Res	Res	Res
r															

15	14	13	12	11	10	9	8	7	6	5	4	3	2	1	0
CNT[15:0]															
rw	rw	rw	rw	rw	rw	rw	rw	rw	rw	rw	rw	rw	rw	rw	rw

Bit 31 **UIFCPY**: UIF Copy
This bit is a read-only copy of the UIF bit in the TIMx_ISR register.

Bits 30:16 Reserved, must be kept at reset value.

Bits 15:0 **CNT[15:0]**: Counter value

27.5.10 TIM15 prescaler (TIM15_PSC)

Address offset: 0x28

Reset value: 0x0000

15	14	13	12	11	10	9	8	7	6	5	4	3	2	1	0
PSC[15:0]															
rw	rw	rw	rw	rw	rw	rw	rw	rw	rw	rw	rw	rw	rw	rw	rw

Bits 15:0 **PSC[15:0]**: Prescaler value
The counter clock frequency (CK_CNT) is equal to f_{CK_PSC} / (PSC[15:0] + 1).
PSC contains the value to be loaded in the active prescaler register at each update event (including when the counter is cleared through UG bit of TIMx_EGR register or through trigger controller when configured in “reset mode”).

27.5.11 TIM15 auto-reload register (TIM15_ARR)

Address offset: 0x2C

Reset value: 0xFFFF

15	14	13	12	11	10	9	8	7	6	5	4	3	2	1	0
ARR[15:0]															
rw	rw	rw	rw	rw	rw	rw	rw	rw	rw	rw	rw	rw	rw	rw	rw

Bits 15:0 **ARR[15:0]**: Prescaler value
ARR is the value to be loaded in the actual auto-reload register.
Refer to the *Section 27.4.1: Time-base unit on page 790* for more details about ARR update and behavior.
The counter is blocked while the auto-reload value is null.

27.5.12 TIM15 repetition counter register (TIM15_RCR)

Address offset: 0x30

Reset value: 0x0000

15	14	13	12	11	10	9	8	7	6	5	4	3	2	1	0
Res	Res	Res	Res	Res	Res	Res	Res	REP[7:0]							
								rw	rw	rw	rw	rw	rw	rw	rw

Bits 15:8 Reserved, must be kept at reset value.

Bits 7:0 **REP[7:0]**: Repetition counter value

These bits allow the user to set-up the update rate of the compare registers (i.e. periodic transfers from preload to active registers) when preload registers are enable, as well as the update interrupt generation rate, if this interrupt is enable.

Each time the REP_CNT related downcounter reaches zero, an update event is generated and it restarts counting from REP value. As REP_CNT is reloaded with REP value only at the repetition update event U_RC, any write to the TIMx_RCR register is not taken in account until the next repetition update event.

It means in PWM mode (REP+1) corresponds to the number of PWM periods in edge-aligned mode.

27.5.13 TIM15 capture/compare register 1 (TIM15_CCR1)

Address offset: 0x34

Reset value: 0x0000

15	14	13	12	11	10	9	8	7	6	5	4	3	2	1	0
CCR1[15:0]															
rw	rw	rw	rw	rw	rw	rw	rw	rw	rw	rw	rw	rw	rw	rw	rw

Bits 15:0 **CCR1[15:0]**: Capture/Compare 1 value

If channel CC1 is configured as output:
CCR1 is the value to be loaded in the actual capture/compare 1 register (preload value).

It is loaded permanently if the preload feature is not selected in the TIMx_CCMR1 register (bit OC1PE). Else the preload value is copied in the active capture/compare 1 register when an update event occurs.

The active capture/compare register contains the value to be compared to the counter TIMx_CNT and signaled on OC1 output.

If channel CC1 is configured as input:
CCR1 is the counter value transferred by the last input capture 1 event (IC1).

27.5.14 TIM15 capture/compare register 2 (TIM15_CCR2)

Address offset: 0x38

Reset value: 0x0000

15	14	13	12	11	10	9	8	7	6	5	4	3	2	1	0
CCR2[15:0]															
rw	rw	rw	rw	rw	rw	rw	rw	rw	rw	rw	rw	rw	rw	rw	rw

Bits 15:0 **CCR2[15:0]**: Capture/Compare 2 value

If channel CC2 is configured as output:

CCR2 is the value to be loaded in the actual capture/compare 2 register (preload value).

It is loaded permanently if the preload feature is not selected in the TIMx_CCMR2 register (bit OC2PE). Else the preload value is copied in the active capture/compare 2 register when an update event occurs.

The active capture/compare register contains the value to be compared to the counter TIMx_CNT and signalled on OC2 output.

If channel CC2 is configured as input:

CCR2 is the counter value transferred by the last input capture 2 event (IC2).

27.5.15 TIM15 break and dead-time register (TIM15_BDTR)

Address offset: 0x44

Reset value: 0x0000 0000

31	30	29	28	27	26	25	24	23	22	21	20	19	18	17	16
Res	Res	Res	Res	Res	Res	Res	Res	Res	Res	Res	Res	Res	Res	Res	Res

15	14	13	12	11	10	9	8	7	6	5	4	3	2	1	0
MOE	AOE	BKP	BKE	OSSR	OSSI	LOCK[1:0]		DTG[7:0]							
rw	rw	rw	rw	rw	rw	rw	rw	rw	rw	rw	rw	rw	rw	rw	rw

Note: As the AOE, BKP, BKE, OSSI, OSSR and DTG[7:0] bits may be write-locked depending on the LOCK configuration, it may be necessary to configure all of them during the first write access to the TIMx_BDTR register.

Bits 31:16 Reserved, must be kept at reset value.

Bit 15 **MOE**: Main output enable

This bit is cleared asynchronously by hardware as soon as the break input is active. It is set by software or automatically depending on the AOE bit. It is acting only on the channels which are configured in output.

0: OC and OCN outputs are disabled or forced to idle state depending on the OSSI bit.

1: OC and OCN outputs are enabled if their respective enable bits are set (CCxE, CCxNE in TIMx_CCER register)

See OC/OCN enable description for more details (*Section 27.5.8: TIM15 capture/compare enable register (TIM15_CCER) on page 833*).

Bit 14 **AOE**: Automatic output enable

0: MOE can be set only by software

1: MOE can be set by software or automatically at the next update event (if the break input is not be active)

Note: This bit can not be modified as long as LOCK level 1 has been programmed (LOCK bits in TIMx_BDTR register).

Bit 13 **BKP**: Break polarity

0: Break input BRK is active low
1: Break input BRK is active high

*Note: **1:** This bit can not be modified as long as LOCK level 1 has been programmed (LOCK bits in TIMx_BDTR register).*

__2:__ Any write operation to this bit takes a delay of 1 APB clock cycle to become effective.

Bit 12 **BKE**: Break enable

0: Break inputs (BRK and CCS clock failure event) disabled
1; Break inputs (BRK and CCS clock failure event) enabled
This bit cannot be modified when LOCK level 1 has been programmed (LOCK bits in TIMx_BDTR register).

Note: Any write operation to this bit takes a delay of 1 APB clock cycle to become effective.

Bit 11 **OSSR**: Off-state selection for Run mode

This bit is used when MOE=1 on channels that have a complementary output which are configured as outputs. OSSR is not implemented if no complementary output is implemented in the timer.

See OC/OCN enable description for more details (*Section 27.5.8: TIM15 capture/compare enable register (TIM15_CCER) on page 833*).

0: When inactive, OC/OCN outputs are disabled (the timer releases the output control which is taken over by the AFIO logic, which forces a Hi-Z state)
1: When inactive, OC/OCN outputs are enabled with their inactive level as soon as CCxE=1 or CCxNE=1 (the output is still controlled by the timer).

Note: This bit can not be modified as soon as the LOCK level 2 has been programmed (LOCK bits in TIMx_BDTR register).

Bit 10 **OSSI**: Off-state selection for Idle mode

This bit is used when MOE=0 on channels configured as outputs.
See OC/OCN enable description for more details (*Section 27.5.8: TIM15 capture/compare enable register (TIM15_CCER) on page 833*).

0: When inactive, OC/OCN outputs are disabled (OC/OCN enable output signal=0)
1: When inactive, OC/OCN outputs are forced first with their idle level as soon as CCxE=1 or CCxNE=1. OC/OCN enable output signal=1)

Note: This bit can not be modified as soon as the LOCK level 2 has been programmed (LOCK bits in TIMx_BDTR register).

Bits 9:8 **LOCK[1:0]**: Lock configuration

These bits offer a write protection against software errors.

00: LOCK OFF - No bit is write protected
01: LOCK Level 1 = DTG bits in TIMx_BDTR register, OISx and OISxN bits in TIMx_CR2 register and BKE/BKP/AOE bits in TIMx_BDTR register can no longer be written
10: LOCK Level 2 = LOCK Level 1 + CC Polarity bits (CCxP/CCxNP bits in TIMx_CCER register, as long as the related channel is configured in output through the CCxS bits) as well as OSSR and OSSI bits can no longer be written.
11: LOCK Level 3 = LOCK Level 2 + CC Control bits (OCxM and OCxPE bits in TIMx_CCMRx registers, as long as the related channel is configured in output through the CCxS bits) can no longer be written.

Note: The LOCK bits can be written only once after the reset. Once the TIMx_BDTR register has been written, their content is frozen until the next reset.

Bits 7:0 **DTG[7:0]**: Dead-time generator setup

This bit-field defines the duration of the dead-time inserted between the complementary outputs. DT correspond to this duration.

DTG[7:5]=0xx => DT=DTG[7:0]x t_{dtg} with t_{dtg}=t_{DTS}
DTG[7:5]=10x => DT=(64+DTG[5:0])xt_{dtg} with T_{dtg}=2xt_{DTS}
DTG[7:5]=110 => DT=(32+DTG[4:0])xt_{dtg} with T_{dtg}=8xt_{DTS}
DTG[7:5]=111 => DT=(32+DTG[4:0])xt_{dtg} with T_{dtg}=16xt_{DTS}
Example if T_{DTS}=125ns (8MHz), dead-time possible values are:
0 to 15875 ns by 125 ns steps,
16 µs to 31750 ns by 250 ns steps,
32 µs to 63 µs by 1 µs steps,
64 µs to 126 µs by 2 µs steps

Note: This bit-field can not be modified as long as LOCK level 1, 2 or 3 has been programmed (LOCK bits in TIMx_BDTR register).

27.5.16 TIM15 DMA control register (TIM15_DCR)

Address offset: 0x48

Reset value: 0x0000

15	14	13	12	11	10	9	8	7	6	5	4	3	2	1	0
Res	Res	Res	DBL[4:0]					Res	Res	Res	DBA[4:0]				
			rw	rw	rw	rw	rw				rw	rw	rw	rw	rw

Bits 15:13 Reserved, must be kept at reset value.

Bits 12:8 **DBL[4:0]**: DMA burst length

This 5-bit field defines the length of DMA transfers (the timer recognizes a burst transfer when a read or a write access is done to the TIMx_DMAR address).

00000: 1 transfer,
00001: 2 transfers,
00010: 3 transfers,
...
10001: 18 transfers.

Bits 7:5 Reserved, must be kept at reset value.

Bits 4:0 **DBA[4:0]**: DMA base address

This 5-bit field defines the base-address for DMA transfers (when read/write access are done through the TIMx_DMAR address). DBA is defined as an offset starting from the address of the TIMx_CR1 register.
Example:

00000: TIMx_CR1,
00001: TIMx_CR2,
00010: TIMx_SMCR,
...

27.5.17 TIM15 DMA address for full transfer (TIM15_DMAR)

Address offset: 0x4C

Reset value: 0x0000

15	14	13	12	11	10	9	8	7	6	5	4	3	2	1	0
DMAB[15:0]															
rw	rw	rw	rw	rw	rw	rw	rw	rw	rw	rw	rw	rw	rw	rw	rw

Bits 15:0 **DMAB[15:0]**: DMA register for burst accesses

A read or write operation to the DMAR register accesses the register located at the address

(TIMx_CR1 address) + (DBA + DMA index) x 4

where TIMx_CR1 address is the address of the control register 1, DBA is the DMA base address configured in TIMx_DCR register, DMA index is automatically controlled by the DMA transfer, and ranges from 0 to DBL (DBL configured in TIMx_DCR).

27.5.18 TIM15 option register 1 (TIM15_OR1)

Address offset: 0x50

Reset value: 0x0000

31	30	29	28	27	26	25	24	23	22	21	20	19	18	17	16
Res	Res	Res	Res	Res	Res	Res	Res	Res	Res	Res	Res	Res	Res	Res	Res

15	14	13	12	11	10	9	8	7	6	5	4	3	2	1	0
Res	Res	Res	Res	Res	Res	Res	Res	Res	Res	Res	Res	Res	ENCODER_ MODE[1:0]		TI1_ RMP
													rw	rw	rw

Bits 31:3 Reserved, must be kept at reset value.

Bits 2:1 **ENCODER_MODE[1:0]**: Encoder mode

00: No redirection

01:TIM2 IC1 and TIM2 IC2 are connected to TIM15 IC1 and TIM15 IC2 respectively

10:Reserved

11:Reserved

Bit 0 **TI1_RMP**: Input capture 1 remap

0: TIM15 input capture 1 is connected to I/O

1: TIM15 input capture 1 is connected to LSE

27.5.19 TIM15 option register 2 (TIM15_OR2)

Address offset: 0x60

Reset value: 0x0000 0001

31	30	29	28	27	26	25	24	23	22	21	20	19	18	17	16
Res	Res	Res	Res	Res	Res	Res	Res	Res	Res	Res	Res	Res	Res	Res	Res

15	14	13	12	11	10	9	8	7	6	5	4	3	2	1	0
Res	Res	Res	Res	BKCM P2P	BKCM P1P	BKINP	Res	Res	Res	Res.	Res.	Res.	BKCM P2E	BKCM P1E	BKINE
				rw	rw	rw							rw	rw	rw

Bits 31:12 Reserved, must be kept at reset value.

Bit 11 **BKCMP2P**: BRK COMP2 input polarity

This bit selects the COMP2 input sensitivity. It must be programmed together with the BKP polarity bit.

0: COMP2 input is active low
1: COMP2 input is active high

Note: This bit can not be modified as long as LOCK level 1 has been programmed (LOCK bits in TIMx_BDTR register).

Bit 10 **BKCMP1P**: BRK COMP1 input polarity

This bit selects the COMP1 input sensitivity. It must be programmed together with the BKP polarity bit.

0: COMP1 input is active low
1: COMP1 input is active high

Note: This bit can not be modified as long as LOCK level 1 has been programmed (LOCK bits in TIMx_BDTR register).

Bit 9 **BKINP**: BRK BKIN input polarity

This bit selects the BKIN alternate function input sensitivity. It must be programmed together with the BKP polarity bit.

0: BKIN input is active low
1: BKIN input is active high

Note: This bit can not be modified as long as LOCK level 1 has been programmed (LOCK bits in TIMx_BDTR register).

Bits 8:3 Reserved, must be kept at reset value

Bit 2 **BKCMP2E**: BRK COMP2 enable

This bit enables the COMP2 for the timer's BRK input. COMP2 output is 'ORed' with the other BRK sources.

0: COMP2 input disabled
1: COMP2 input enabled

Note: This bit can not be modified as long as LOCK level 1 has been programmed (LOCK bits in TIMx_BDTR register).

Bit 1 **BKCMP1E**: BRK COMP1 enable

This bit enables the COMP1 for the timer's BRK input. COMP1 output is 'ORed' with the other BRK sources.

0: COMP1 input disabled
1: COMP1 input enabled

Note: This bit can not be modified as long as LOCK level 1 has been programmed (LOCK bits in TIMx_BDTR register).

Bit 0 **BKINE**: BRK BKIN input enable

This bit enables the BKIN alternate function input for the timer's BRK input. BKIN input is 'ORed' with the other BRK sources.

0: BKIN input disabled
1: BKIN input enabled

Note: This bit can not be modified as long as LOCK level 1 has been programmed (LOCK bits in TIMx_BDTR register).

27.5.20 TIM15 register map

TIM15 registers are mapped as 16-bit addressable registers as described in the table below:

Table 120. TIM15 register map and reset values

Offset	Register	31	30	29	28	27	26	25	24	23	22	21	20	19	18	17	16	15	14	13	12	11	10	9	8	7	6	5	4	3	2	1	0
0x00	**TIM15_CR1**	Res	Res	Res	Res	Res	Res	Res	Res	Res	Res	Res	Res	Res	Res	Res	Res	Res	Res	Res	Res	UIFREMAP	Res	CKD [1:0]		ARPE	Res	Res	Res	OPM	URS	UDIS	CEN
	Reset value																					0		0	0	0				0	0	0	0
0x04	**TIM15_CR2**	Res	Res	Res	Res	Res	Res	Res	Res	Res	Res	Res	Res	Res	Res	Res	Res	Res	Res	Res	Res	Res	OIS2	OIS1N	OIS1	TI1S	MMS[2:0]			CCDS	CCUS	Res	CCPC
	Reset value																						0	0	0	0	0	0	0	0	0		0
0x08	**TIM15_SMCR**	Res	Res	Res	Res	Res	Res	Res	Res	Res	Res	Res	Res	Res	Res	Res	SMS[3]	Res	Res	Res	Res	Res	Res	Res	Res	MSM	TS[2:0]			Res	SMS[2:0]		
	Reset value																0									0	0	0	0		0	0	0
0x0C	**TIM15_DIER**	Res	Res	Res	Res	Res	Res	Res	Res	Res	Res	Res	Res	Res	Res	Res	Res	Res	TDE	COMDE	Res	Res	CC2DE	CC1DE	UDE	BIE	TIE	COMIE	Res	Res	CC2IE	CC1IE	UIE
	Reset value																		0	0			0	0	0	0	0	0			0	0	0
0x10	**TIM15_SR**	Res	Res	Res	Res	Res	Res	Res	Res	Res	Res	Res	Res	Res	Res	Res	Res	Res	Res	Res	Res	Res	CC2OF	CC1OF	Res	BIF	TIF	COMIF	Res	Res	CC2IF	CC1IF	UIF
	Reset value																						0	0		0	0	0			0	0	0
0x14	**TIM15_EGR**	Res	Res	Res	Res	Res	Res	Res	Res	Res	Res	Res	Res	Res	Res	Res	Res	Res	Res	Res	Res	Res	Res	Res	Res	BG	TG	COMG	Res	Res	CC2G	CC1G	UG
	Reset value																									0	0	0			0	0	0
0x18	**TIM15_CCMR1** Output Compare mode	Res	Res	Res	Res	Res	Res	Res	OC2M[3]	Res	Res	Res	Res	Res	Res	Res	OC1M[3]	Res	OC2M [2:0]			OC2PE	OC2FE	CC2S [1:0]		Res	OC1M [2:0]			OC1PE	OC1FE	CC1S [1:0]	
	Reset value								0								0		0	0	0	0	0	0	0		0	0	0	0	0	0	0
	TIM15_CCMR1 Input Capture mode	Res	Res	Res	Res	Res	Res	Res	Res	Res	Res	Res	Res	Res	Res	Res	Res	IC2F[3:0]				IC2 PSC [1:0]		CC2S [1:0]		IC1F[3:0]				IC1 PSC [1:0]	CC1S [1:0]		
	Reset value																	0	0	0	0	0	0	0	0	0	0	0	0	0	0	0	0
0x20	**TIM15_CCER**	Res	Res	Res	Res	Res	Res	Res	Res	Res	Res	Res	Res	Res	Res	Res	Res	Res	Res	Res	Res	Res	Res	Res	Res	CC2NP	Res	CC2P	CC2E	CC1NP	CC1NE	CC1P	CC1E
	Reset value																									0		0	0	0	0	0	0

Table 120. TIM15 register map and reset values (continued)

Offset	Register	31	30	29	28	27	26	25	24	23	22	21	20	19	18	17	16	15	14	13	12	11	10	9	8	7	6	5	4	3	2	1	0
0x24	TIM15_CNT	UIFCPY or Res.	Res	Res	Res	Res	Res	Res	Res	Res	Res	Res	Res	Res	Res	Res	Res	CNT[15:0]															
	Reset value	0																0	0	0	0	0	0	0	0	0	0	0	0	0	0	0	0
0x28	TIM15_PSC	Res	Res	Res	Res	Res	Res	Res	Res	Res	Res	Res	Res	Res	Res	Res	Res	PSC[15:0]															
	Reset value																	0	0	0	0	0	0	0	0	0	0	0	0	0	0	0	0
0x2C	TIM15_ARR	Res	Res	Res	Res	Res	Res	Res	Res	Res	Res	Res	Res	Res	Res	Res	Res	ARR[15:0]															
	Reset value																	1	1	1	1	1	1	1	1	1	1	1	1	1	1	1	1
0x30	TIM15_RCR	Res	Res	Res	Res	Res	Res	Res	Res	Res	Res	Res	Res	Res	Res	Res	Res	Res	Res	Res	Res	Res	Res	Res	Res	REP[7:0]							
	Reset value																									0	0	0	0	0	0	0	0
0x34	TIM15_CCR1	Res	Res	Res	Res	Res	Res	Res	Res	Res	Res	Res	Res	Res	Res	Res	Res	CCR1[15:0]															
	Reset value																	0	0	0	0	0	0	0	0	0	0	0	0	0	0	0	0
0x38	TIM15_CCR2	Res	Res	Res	Res	Res	Res	Res	Res	Res	Res	Res	Res	Res	Res	Res	Res	CCR2[15:0]															
	Reset value																	0	0	0	0	0	0	0	0	0	0	0	0	0	0	0	0
0x44	TIM15_BDTR	Res	Res	Res	Res	Res	Res	Res	Res	Res	Res	Res	Res	Res	Res	Res	Res	MOE	AOE	BKP	BKE	OSSR	OSSI	LOCK [1:0]		DT[7:0]							
	Reset value																	0	0	0	0	0	0	0	0	0	0	0	0	0	0	0	0
0x48	TIM15_DCR	Res	Res	Res	Res	Res	Res	Res	Res	Res	Res	Res	Res	Res	Res	Res	Res	Res	Res	Res	DBL[4:0]					Res	Res	Res	DBA[4:0]				
	Reset value																				0	0	0	0	0				0	0	0	0	0
0x4C	TIM15_DMAR	Res	Res	Res	Res	Res	Res	Res	Res	Res	Res	Res	Res	Res	Res	Res	Res	DMAB[15:0]															
	Reset value																	0	0	0	0	0	0	0	0	0	0	0	0	0	0	0	0
0x50	TIM15_OR1	Res	Res	Res	Res	Res	Res	Res	Res	Res	Res	Res	Res	Res	Res	Res	Res	Res	Res	Res	Res	Res	Res	Res	Res	Res	Res	Res	Res	Res	ENCODER_MODE[1:0]		TI1_RMP
	Reset value																														0	0	0

Table 120. TIM15 register map and reset values (continued)

Offset	Register	31	30	29	28	27	26	25	24	23	22	21	20	19	18	17	16	15	14	13	12	11	10	9	8	7	6	5	4	3	2	1	0
0x60	TIM15_OR2	Res	Res	Res	Res	Res	Res	Res	Res	Res	Res	Res	Res	Res	Res	Res	Res	Res	Res	Res	Res	BKCMP2P	BKCMP1P	BKINP	Res	Res	Res	Res	Res	Res	BKCMP2E	BKCMP1E	BKINE
	Reset value																					0	0	0							0	0	1

Refer to *Section 2.2.2 on page 62* for the register boundary addresses.

27.6 TIM16 registers

Refer to *Section 1.1 on page 55* for a list of abbreviations used in register descriptions.

27.6.1 TIM16 control register 1 (TIMx_CR1)

Address offset: 0x00

Reset value: 0x0000

15	14	13	12	11	10	9	8	7	6	5	4	3	2	1	0
Res	Res	Res	Res	UIF REM-AP	Res	CKD[1:0]		ARPE	Res	Res	Res	OPM	URS	UDIS	CEN
				rw		rw	rw	rw				rw	rw	rw	rw

Bits 15:12 Reserved, must be kept at reset value.

Bit 11 **UIFREMAP**: UIF status bit remapping

0: No remapping. UIF status bit is not copied to TIMx_CNT register bit 31.
1: Remapping enabled. UIF status bit is copied to TIMx_CNT register bit 31.

Bit 10 Reserved, must be kept at reset value.

Bits 9:8 **CKD[1:0]**: Clock division

This bit-field indicates the division ratio between the timer clock (CK_INT) frequency and the dead-time and sampling clock (t_{DTS})used by the dead-time generators and the digital filters (TIx),

00: $t_{DTS}=t_{CK_INT}$
01: $t_{DTS}=2*t_{CK_INT}$
10: $t_{DTS}=4*t_{CK_INT}$
11: Reserved, do not program this value

Bit 7 **ARPE**: Auto-reload preload enable

0: TIMx_ARR register is not buffered
1: TIMx_ARR register is buffered

Bits 6:4 Reserved, must be kept at reset value.

Bit 3 **OPM**: One pulse mode

0: Counter is not stopped at update event
1: Counter stops counting at the next update event (clearing the bit CEN)

Bit 2 **URS**: Update request source

This bit is set and cleared by software to select the UEV event sources.

0: Any of the following events generate an update interrupt or DMA request if enabled. These events can be:

- Counter overflow/underflow
- Setting the UG bit
- Update generation through the slave mode controller

1: Only counter overflow/underflow generates an update interrupt or DMA request if enabled.

Bit 1 **UDIS**: Update disable

This bit is set and cleared by software to enable/disable UEV event generation.

0: UEV enabled. The Update (UEV) event is generated by one of the following events:

- Counter overflow/underflow
- Setting the UG bit
- Update generation through the slave mode controller

Buffered registers are then loaded with their preload values.

1: UEV disabled. The Update event is not generated, shadow registers keep their value (ARR, PSC, CCRx). However the counter and the prescaler are reinitialized if the UG bit is set or if a hardware reset is received from the slave mode controller.

Bit 0 **CEN**: Counter enable

0: Counter disabled

1: Counter enabled

Note: External clock and gated mode can work only if the CEN bit has been previously set by software. However trigger mode can set the CEN bit automatically by hardware.

27.6.2 TIM16 control register 2 (TIMx_CR2)

Address offset: 0x04

Reset value: 0x0000

15	14	13	12	11	10	9	8	7	6	5	4	3	2	1	0
Res	Res	Res	Res	Res	Res	OIS1N	OIS1	Res	Res	Res	Res	CCDS	CCUS	Res	CCPC
						rw	rw					rw	rw		rw

Bits 15:10 Reserved, must be kept at reset value.

Bit 9 **OIS1N**: Output Idle state 1 (OC1N output)

0: OC1N=0 after a dead-time when MOE=0

1: OC1N=1 after a dead-time when MOE=0

Note: This bit can not be modified as long as LOCK level 1, 2 or 3 has been programmed (LOCK bits in TIMx_BKR register).

Bit 8 **OIS1**: Output Idle state 1 (OC1 output)

0: OC1=0 (after a dead-time if OC1N is implemented) when MOE=0

1: OC1=1 (after a dead-time if OC1N is implemented) when MOE=0

Note: This bit can not be modified as long as LOCK level 1, 2 or 3 has been programmed (LOCK bits in TIMx_BKR register).

Bits 7:4 Reserved, must be kept at reset value.

Bit 3 **CCDS**: Capture/compare DMA selection

0: CCx DMA request sent when CCx event occurs

1: CCx DMA requests sent when update event occurs

Bit 2 **CCUS**: Capture/compare control update selection

0: When capture/compare control bits are preloaded (CCPC=1), they are updated by setting the COMG bit only.

1: When capture/compare control bits are preloaded (CCPC=1), they are updated by setting the COMG bit or when an rising edge occurs on TRGI.

Note: This bit acts only on channels that have a complementary output.

Bit 1 Reserved, must be kept at reset value.

Bit 0 **CCPC**: Capture/compare preloaded control

0: CCxE, CCxNE and OCxM bits are not preloaded

1: CCxE, CCxNE and OCxM bits are preloaded, after having been written, they are updated only when COM bit is set.

Note: This bit acts only on channels that have a complementary output.

27.6.3 TIM16 DMA/interrupt enable register (TIMx_DIER)

Address offset: 0x0C

Reset value: 0x0000

15	14	13	12	11	10	9	8	7	6	5	4	3	2	1	0
Res	TDE	COMDE	Res	Res	Res	CC1DE	UDE	BIE	Res	COMIE	Res	Res	Res	CC1IE	UIE
	rw	rw				rw	rw	rw		rw				rw	rw

Bit 15 Reserved, must be kept at reset value.

Bit 14 **TDE**: Trigger DMA request enable

0: Trigger DMA request disabled

1: Trigger DMA request enabled

Bit 13 **COMDE**: COM DMA request enable

0: COM DMA request disabled

1: COM DMA request enabled

Bits 12:10 Reserved, must be kept at reset value.

Bit 9 **CC1DE**: Capture/Compare 1 DMA request enable

0: CC1 DMA request disabled

1: CC1 DMA request enabled

Bit 8 **UDE**: Update DMA request enable

0: Update DMA request disabled

1: Update DMA request enabled

Bit 7 **BIE**: Break interrupt enable

0: Break interrupt disabled

1: Break interrupt enabled

Bit 6 Reserved, must be kept at reset value.

Bit 5 **COMIE:** COM interrupt enable

0: COM interrupt disabled

1: COM interrupt enabled

Bits 4:2 Reserved, must be kept at reset value.

Bit 1 **CC1IE**: Capture/Compare 1 interrupt enable

0: CC1 interrupt disabled

1: CC1 interrupt enabled

Bit 0 **UIE**: Update interrupt enable

0: Update interrupt disabled

1: Update interrupt enabled

27.6.4 TIM16 status register (TIMx_SR)

Address offset: 0x10

Reset value: 0x0000

15	14	13	12	11	10	9	8	7	6	5	4	3	2	1	0
Res	Res	Res	Res	Res	Res	CC1OF	Res	BIF	Res	COMIF	Res	Res	Res	CC1IF	UIF
						rc_w0		rc_w0		rc_w0				rc_w0	rc_w0

Bits 15:10 Reserved, must be kept at reset value.

Bit 9 **CC1OF**: Capture/Compare 1 overcapture flag

This flag is set by hardware only when the corresponding channel is configured in input capture mode. It is cleared by software by writing it to ‘0’.
0: No overcapture has been detected
1: The counter value has been captured in TIMx_CCR1 register while CC1IF flag was already set

Bit 8 Reserved, must be kept at reset value.

Bit 7 **BIF**: Break interrupt flag

This flag is set by hardware as soon as the break input goes active. It can be cleared by software if the break input is not active.
0: No break event occurred
1: An active level has been detected on the break input

Bit 6 Reserved, must be kept at reset value.

Bit 5 **COMIF:** COM interrupt flag

This flag is set by hardware on a COM event (once the capture/compare control bits –CCxE, CCxNE, OCxM– have been updated). It is cleared by software.
0: No COM event occurred
1: COM interrupt pending

Bits 4:2 Reserved, must be kept at reset value.

Bit 1 **CC1IF**: Capture/Compare 1 interrupt flag

If channel CC1 is configured as output:
This flag is set by hardware when the counter matches the compare value. It is cleared by software.
0: No match.
1: The content of the counter TIMx_CNT matches the content of the TIMx_CCR1 register. When the contents of TIMx_CCR1 are greater than the contents of TIMx_ARR, the CC1IF bit goes high on the counter overflow

If channel CC1 is configured as input:
This bit is set by hardware on a capture. It is cleared by software or by reading the TIMx_CCR1 register.
0: No input capture occurred
1: The counter value has been captured in TIMx_CCR1 register (An edge has been detected on IC1 which matches the selected polarity)

Bit 0 **UIF**: Update interrupt flag

This bit is set by hardware on an update event. It is cleared by software.
0: No update occurred.
1: Update interrupt pending. This bit is set by hardware when the registers are updated:

- At overflow regarding the repetition counter value (update if repetition counter = 0) and if the UDIS=0 in the TIMx_CR1 register.
- When CNT is reinitialized by software using the UG bit in TIMx_EGR register, if URS=0 and UDIS=0 in the TIMx_CR1 register.
- When CNT is reinitialized by a trigger event (refer to *Section 27.5.3: TIM15 slave mode control register (TIM15_SMCR)*), if URS=0 and UDIS=0 in the TIMx_CR1 register.

27.6.5 TIM16 event generation register (TIMx_EGR)

Address offset: 0x14

Reset value: 0x0000

15	14	13	12	11	10	9	8	7	6	5	4	3	2	1	0
Res	Res	Res	Res	Res	Res	Res	Res	BG	Res	COMG	Res	Res	Res	CC1G	UG
								w		w				w	w

Bits 15:8 Reserved, must be kept at reset value.

Bit 7 **BG**: Break generation

This bit is set by software in order to generate an event, it is automatically cleared by hardware.
0: No action.
1: A break event is generated. MOE bit is cleared and BIF flag is set. Related interrupt or DMA transfer can occur if enabled.

Bit 6 Reserved, must be kept at reset value.

Bit 5 **COMG:** Capture/Compare control update generation

This bit can be set by software, it is automatically cleared by hardware.
0: No action
1: When the CCPC bit is set, it is possible to update the CCxE, CCxNE and OCxM bits

Note: This bit acts only on channels that have a complementary output.

Bits 4:2 Reserved, must be kept at reset value.

Bit 1 **CC1G**: Capture/Compare 1 generation

This bit is set by software in order to generate an event, it is automatically cleared by hardware.
0: No action.
1: A capture/compare event is generated on channel 1:
If channel CC1 is configured as output:
CC1IF flag is set, Corresponding interrupt or DMA request is sent if enabled.
If channel CC1 is configured as input:
The current value of the counter is captured in TIMx_CCR1 register. The CC1IF flag is set, the corresponding interrupt or DMA request is sent if enabled. The CC1OF flag is set if the CC1IF flag was already high.

Bit 0 **UG**: Update generation

This bit can be set by software, it is automatically cleared by hardware.
0: No action.
1: Reinitialize the counter and generates an update of the registers. Note that the prescaler counter is cleared too (anyway the prescaler ratio is not affected).

27.6.6 TIM16 capture/compare mode register 1 (TIMx_CCMR1)

Address offset: 0x18

Reset value: 0x0000 0000

The channels can be used in input (capture mode) or in output (compare mode). The direction of a channel is defined by configuring the corresponding CCxS bits. All the other bits of this register have a different function in input and in output mode. For a given bit, OCxx describes its function when the channel is configured in output, ICxx describes its function when the channel is configured in input. So you must take care that the same bit can have a different meaning for the input stage and for the output stage.

31	30	29	28	27	26	25	24	23	22	21	20	19	18	17	16
Res	Res	Res	Res	Res	Res	Res	Res	Res	Res	Res	Res	Res	Res	Res	OC1M [3]
															Res
															rw

15	14	13	12	11	10	9	8	7	6	5	4	3	2	1	0
Res	Res	Res	Res	Res	Res	Res	Res	Res.	OC1M[2:0]			OC1PE	OC1FE	CC1S[1:0]	
								IC1F[3:0]				IC1PSC[1:0]			
								rw	rw	rw	rw	rw	rw	rw	rw

Output compare mode:

Bits 31:17 Reserved, always read as 0

Bit 16 **OC1M[3]:** Output Compare 1 mode (bit 3)

Bits 15:7 Reserved

Bits 6:4 **OC1M[2:0]**: Output Compare 1 mode (bits 2 to 0)

These bits define the behavior of the output reference signal OC1REF from which OC1 and OC1N are derived. OC1REF is active high whereas OC1 and OC1N active level depends on CC1P and CC1NP bits.
0000: Frozen - The comparison between the output compare register TIMx_CCR1 and the counter TIMx_CNT has no effect on the outputs.
0001: Set channel 1 to active level on match. OC1REF signal is forced high when the counter TIMx_CNT matches the capture/compare register 1 (TIMx_CCR1).
0010: Set channel 1 to inactive level on match. OC1REF signal is forced low when the counter TIMx_CNT matches the capture/compare register 1 (TIMx_CCR1).
0011: Toggle - OC1REF toggles when TIMx_CNT=TIMx_CCR1.
0100: Force inactive level - OC1REF is forced low.
0101: Force active level - OC1REF is forced high.
0110: PWM mode 1 - Channel 1 is active as long as TIMx_CNT<TIMx_CCR1 else inactive.
0111: PWM mode 2 - Channel 1 is inactive as long as TIMx_CNT<TIMx_CCR1 else active.
All other values: Reserved

*Note: **1:** These bits can not be modified as long as LOCK level 3 has been programmed (LOCK bits in TIMx_BDTR register) and CC1S='00' (the channel is configured in output).*

__2:__ In PWM mode 1 or 2, the OCREF level changes only when the result of the comparison changes or when the output compare mode switches from "frozen" mode to "PWM" mode.

Bit 3 **OC1PE**: Output Compare 1 preload enable

0: Preload register on TIMx_CCR1 disabled. TIMx_CCR1 can be written at anytime, the new value is taken in account immediately.
1: Preload register on TIMx_CCR1 enabled. Read/Write operations access the preload register. TIMx_CCR1 preload value is loaded in the active register at each update event.

*Note: **1:** These bits can not be modified as long as LOCK level 3 has been programmed (LOCK bits in TIMx_BDTR register) and CC1S='00' (the channel is configured in output).*

__2:__ The PWM mode can be used without validating the preload register only in one pulse mode (OPM bit set in TIMx_CR1 register). Else the behavior is not guaranteed.

Bit 2 **OC1FE**: Output Compare 1 fast enable

This bit is used to accelerate the effect of an event on the trigger in input on the CC output.
0: CC1 behaves normally depending on counter and CCR1 values even when the trigger is ON. The minimum delay to activate CC1 output when an edge occurs on the trigger input is 5 clock cycles.
1: An active edge on the trigger input acts like a compare match on CC1 output. Then, OC is set to the compare level independently of the result of the comparison. Delay to sample the trigger input and to activate CC1 output is reduced to 3 clock cycles. OC1FE acts only if the channel is configured in PWM1 or PWM2 mode.

Bits 1:0 **CC1S**: Capture/Compare 1 selection

This bit-field defines the direction of the channel (input/output) as well as the used input.
00: CC1 channel is configured as output
01: CC1 channel is configured as input, IC1 is mapped on TI1
10: CC1 channel is configured as input, IC1 is mapped on TI2
11: CC1 channel is configured as input, IC1 is mapped on TRC. This mode is working only if an internal trigger input is selected through TS bit (TIMx_SMCR register)

Note: CC1S bits are writable only when the channel is OFF (CC1E = '0' in TIMx_CCER).

Input capture mode

Bits 31:8 Reserved, must be kept at reset value.

Bits 7:4 **IC1F[3:0]**: Input capture 1 filter

This bit-field defines the frequency used to sample TI1 input and the length of the digital filter applied to TI1. The digital filter is made of an event counter in which N consecutive events are needed to validate a transition on the output:

0000: No filter, sampling is done at f_{DTS}
0001: $f_{SAMPLING}=f_{CK_INT}$, N=2
0010: $f_{SAMPLING}=f_{CK_INT}$, N=4
0011: $f_{SAMPLING}=f_{CK_INT}$, N=8
0100: $f_{SAMPLING}=f_{DTS}/2$, N=
0101: $f_{SAMPLING}=f_{DTS}/2$, N=8
0110: $f_{SAMPLING}=f_{DTS}/4$, N=6
0111: $f_{SAMPLING}=f_{DTS}/4$, N=8
1000: $f_{SAMPLING}=f_{DTS}/8$, N=6
1001: $f_{SAMPLING}=f_{DTS}/8$, N=8
1010: $f_{SAMPLING}=f_{DTS}/16$, N=5
1011: $f_{SAMPLING}=f_{DTS}/16$, N=6
1100: $f_{SAMPLING}=f_{DTS}/16$, N=8
1101: $f_{SAMPLING}=f_{DTS}/32$, N=5
1110: $f_{SAMPLING}=f_{DTS}/32$, N=6
1111: $f_{SAMPLING}=f_{DTS}/32$, N=8

Bits 3:2 **IC1PSC**: Input capture 1 prescaler

This bit-field defines the ratio of the prescaler acting on CC1 input (IC1).
The prescaler is reset as soon as CC1E='0' (TIMx_CCER register).
00: no prescaler, capture is done each time an edge is detected on the capture input.
01: capture is done once every 2 events
10: capture is done once every 4 events
11: capture is done once every 8 events

Bits 1:0 **CC1S**: Capture/Compare 1 Selection

This bit-field defines the direction of the channel (input/output) as well as the used input.
00: CC1 channel is configured as output
01: CC1 channel is configured as input, IC1 is mapped on TI1
10: CC1 channel is configured as input, IC1 is mapped on TI2
11: CC1 channel is configured as input, IC1 is mapped on TRC. This mode is working only if an internal trigger input is selected through TS bit (TIMx_SMCR register)

Note: CC1S bits are writable only when the channel is OFF (CC1E = '0' in TIMx_CCER).

27.6.7 TIM16 capture/compare enable register (TIMx_CCER)

Address offset: 0x20

Reset value: 0x0000

15	14	13	12	11	10	9	8	7	6	5	4	3	2	1	0
Res	Res	Res	Res	Res	Res	Res	Res	Res	Res	Res	Res	CC1NP	CC1NE	CC1P	CC1E
												rw	rw	rw	rw

Bits 15:4 Reserved, must be kept at reset value.

Bit 3 **CC1NP**: Capture/Compare 1 complementary output polarity

CC1 channel configured as output:

0: OC1N active high
1: OC1N active low

CC1 channel configured as input:

This bit is used in conjunction with CC1P to define the polarity of TI1FP1 and TI2FP1. Refer to the description of CC1P.

*Note: **1.** This bit is not writable as soon as LOCK level 2 or 3 has been programmed (LOCK bits in TIMx_BDTR register) and CC1S="00" (the channel is configured in output).*

__2.__ On channels that have a complementary output, this bit is preloaded. If the CCPC bit is set in the TIMx_CR2 register then the CC1NP active bit takes the new value from the preloaded bit only when a commutation event is generated.

Bit 2 **CC1NE**: Capture/Compare 1 complementary output enable

0: Off - OC1N is not active. OC1N level is then function of MOE, OSSI, OSSR, OIS1, OIS1N and CC1E bits.
1: On - OC1N signal is output on the corresponding output pin depending on MOE, OSSI, OSSR, OIS1, OIS1N and CC1E bits.

Bit 1 **CC1P**: Capture/Compare 1 output polarity

CC1 channel configured as output:
0: OC1 active high
1: OC1 active low
CC1 channel configured as input:
The CC1NP/CC1P bits select the polarity of TI1FP1 and TI2FP1 for trigger or capture operations.
00: Non-inverted/rising edge. The circuit is sensitive to TIxFP1 rising edge (capture or trigger operations in reset, external clock or trigger mode), TIxFP1 is not inverted (trigger operation in gated mode).
01: Inverted/falling edge. The circuit is sensitive to TIxFP1 falling edge (capture or trigger operations in reset, external clock or trigger mode), TIxFP1 is inverted (trigger operation in gated mode.
10: Reserved, do not use this configuration.
1: Non-inverted/both edges. The circuit is sensitive to both TIxFP1 rising and falling edges (capture or trigger operations in reset, external clock or trigger mode), TIxFP1 is not inverted (trigger operation in gated mode).

*Note: **1.** This bit is not writable as soon as LOCK level 2 or 3 has been programmed (LOCK bits in TIMx_BDTR register).*

__2.__ On channels that have a complementary output, this bit is preloaded. If the CCPC bit is set in the TIMx_CR2 register then the CC1P active bit takes the new value from the preloaded bit only when a Commutation event is generated.

Bit 0 **CC1E**: Capture/Compare 1 output enable

CC1 channel configured as output:
0: Off - OC1 is not active. OC1 level is then function of MOE, OSSI, OSSR, OIS1, OIS1N and CC1NE bits.
1: On - OC1 signal is output on the corresponding output pin depending on MOE, OSSI, OSSR, OIS1, OIS1N and CC1NE bits.
CC1 channel configured as input:
This bit determines if a capture of the counter value can actually be done into the input capture/compare register 1 (TIMx_CCR1) or not.
0: Capture disabled
1: Capture enabled

Table 121. Output control bits for complementary OCx and OCxN channels with break feature (TIM16/17)

Control bits					Output states[1]	
MOE bit	OSSI bit	OSSR bit	CCxE bit	CCxNE bit	OCx output state	OCxN output state
1	X	X	0	0	Output Disabled (not driven by the timer: Hi-Z) OCx=0 OCxN=0, OCxN_EN=0	
		0	0	1	Output Disabled (not driven by the timer: Hi-Z) OCx=0	OCxREF + Polarity OCxN=OCxREF XOR CCxNP
		0	1	0	OCxREF + Polarity OCx=OCxREF XOR CCxP	Output Disabled (not driven by the timer: Hi-Z) OCxN=0
		X	1	1	OCREF + Polarity + dead-time	Complementary to OCREF (not OCREF) + Polarity + dead-time
		1	0	1	Off-State (output enabled with inactive state) OCx=CCxP	OCxREF + Polarity OCxN=OCxREF XOR CCxNP
		1	1	0	OCxREF + Polarity OCx=OCxREF XOR CCxP, OCx_EN=1	Off-State (output enabled with inactive state) OCxN=CCxNP, OCxN_EN=1
0	0	X	X	X	Output disabled (not driven by the timer anymore). The output state is defined by the GPIO controller and can be High, Low or Hi-Z.	
	1		0	0		
			0	1	Off-State (output enabled with inactive state) Asynchronously: OCx=CCxP, OCxN=CCxNP Then if the clock is present: OCx=OISx and OCxN=OISxN after a dead-time, assuming that OISx and OISxN do not correspond to OCX and OCxN both in active state	
			1	0		
			1	1		

1. When both outputs of a channel are not used (control taken over by GPIO controller), the OISx, OISxN, CCxP and CCxNP bits must be kept cleared.

Note: The state of the external I/O pins connected to the complementary OCx and OCxN channels depends on the OCx and OCxN channel state and AFIO registers.

27.6.8 TIM16 counter (TIMx_CNT)

Address offset: 0x24

Reset value: 0x0000 0000

31	30	29	28	27	26	25	24	23	22	21	20	19	18	17	16
UIF CPY	Res	Res	Res	Res	Res	Res	Res	Res	Res	Res	Res	Res	Res	Res	Res
r															

15	14	13	12	11	10	9	8	7	6	5	4	3	2	1	0
CNT[15:0]															
rw	rw	rw	rw	rw	rw	rw	rw	rw	rw	rw	rw	rw	rw	rw	rw

Bit 31 **UIFCPY**: UIF Copy
This bit is a read-only copy of the UIF bit of the TIMx_ISR register. If the UIFREMAP bit in TIMx_CR1 is reset, bit 31 is reserved and read as 0.

Bits 30:16 Reserved, must be kept at reset value.

Bits 15:0 **CNT[15:0]**: Counter value

27.6.9 TIM16 prescaler (TIMx_PSC)

Address offset: 0x28

Reset value: 0x0000

15	14	13	12	11	10	9	8	7	6	5	4	3	2	1	0
PSC[15:0]															
rw	rw	rw	rw	rw	rw	rw	rw	rw	rw	rw	rw	rw	rw	rw	rw

Bits 15:0 **PSC[15:0]**: Prescaler value
The counter clock frequency (CK_CNT) is equal to f_{CK_PSC} / (PSC[15:0] + 1).
PSC contains the value to be loaded in the active prescaler register at each update event (including when the counter is cleared through UG bit of TIMx_EGR register or through trigger controller when configured in “reset mode”).

27.6.10 TIM16 auto-reload register (TIMx_ARR)

Address offset: 0x2C

Reset value: 0xFFFF

15	14	13	12	11	10	9	8	7	6	5	4	3	2	1	0
ARR[15:0]															
rw	rw	rw	rw	rw	rw	rw	rw	rw	rw	rw	rw	rw	rw	rw	rw

Bits 15:0 **ARR[15:0]**: Prescaler value
ARR is the value to be loaded in the actual auto-reload register.
Refer to the *Section 27.4.1: Time-base unit on page 790* for more details about ARR update and behavior.
The counter is blocked while the auto-reload value is null.

27.6.11 TIM16 repetition counter register (TIMx_RCR)

Address offset: 0x30

Reset value: 0x0000

15	14	13	12	11	10	9	8	7	6	5	4	3	2	1	0
Res	Res	Res	Res	Res	Res	Res	Res	REP[7:0]							
								rw	rw	rw	rw	rw	rw	rw	rw

Bits 15:8 Reserved, must be kept at reset value.

Bits 7:0 **REP[7:0]**: Repetition counter value

These bits allow the user to set-up the update rate of the compare registers (i.e. periodic transfers from preload to active registers) when preload registers are enable, as well as the update interrupt generation rate, if this interrupt is enable.

Each time the REP_CNT related downcounter reaches zero, an update event is generated and it restarts counting from REP value. As REP_CNT is reloaded with REP value only at the repetition update event U_RC, any write to the TIMx_RCR register is not taken in account until the next repetition update event.

It means in PWM mode (REP+1) corresponds to the number of PWM periods in edge-aligned mode.

27.6.12 TIM16 capture/compare register 1 (TIMx_CCR1)

Address offset: 0x34

Reset value: 0x0000

15	14	13	12	11	10	9	8	7	6	5	4	3	2	1	0
CCR1[15:0]															
rw	rw	rw	rw	rw	rw	rw	rw	rw	rw	rw	rw	rw	rw	rw	rw

Bits 15:0 **CCR1[15:0]**: Capture/Compare 1 value

If channel CC1 is configured as output:
CCR1 is the value to be loaded in the actual capture/compare 1 register (preload value).

It is loaded permanently if the preload feature is not selected in the TIMx_CCMR1 register (bit OC1PE). Else the preload value is copied in the active capture/compare 1 register when an update event occurs.

The active capture/compare register contains the value to be compared to the counter TIMx_CNT and signaled on OC1 output.

If channel CC1 is configured as input:
CCR1 is the counter value transferred by the last input capture 1 event (IC1).

27.6.13 TIM16 break and dead-time register (TIMx_BDTR)

Address offset: 0x44

Reset value: 0x0000 0000

31	30	29	28	27	26	25	24	23	22	21	20	19	18	17	16
Res	Res	Res	Res	Res	Res	Res	Res	Res	Res	Res	Res	Res	Res	Res	Res

15	14	13	12	11	10	9	8	7	6	5	4	3	2	1	0
MOE	AOE	BKP	BKE	OSSR	OSSI	LOCK[1:0]		DTG[7:0]							
rw	rw	rw	rw	rw	rw	rw	rw	rw	rw	rw	rw	rw	rw	rw	rw

Note: As the AOE, BKP, BKE, OSSI, OSSR and DTG[7:0] bits may be write-locked depending on the LOCK configuration, it may be necessary to configure all of them during the first write access to the TIMx_BDTR register.

Bits 31:16 Reserved, must be kept at reset value.

Bit 15 **MOE**: Main output enable

This bit is cleared asynchronously by hardware as soon as the break input is active. It is set by software or automatically depending on the AOE bit. It is acting only on the channels which are configured in output.
0: OC and OCN outputs are disabled or forced to idle state depending on the OSSI bit.
1: OC and OCN outputs are enabled if their respective enable bits are set (CCxE, CCxNE in TIMx_CCER register)
See OC/OCN enable description for more details (*Section 27.5.8: TIM15 capture/compare enable register (TIM15_CCER) on page 833*).

Bit 14 **AOE**: Automatic output enable

0: MOE can be set only by software
1: MOE can be set by software or automatically at the next update event (if the break input is not be active)

Note: This bit can not be modified as long as LOCK level 1 has been programmed (LOCK bits in TIMx_BDTR register).

Bit 13 **BKP**: Break polarity

0: Break input BRK is active low
1: Break input BRK is active high

*Note: **1.** This bit can not be modified as long as LOCK level 1 has been programmed (LOCK bits in TIMx_BDTR register).*

__2.__ Any write operation to this bit takes a delay of 1 APB clock cycle to become effective.

Bit 12 **BKE**: Break enable

0: Break inputs (BRK and CCS clock failure event) disabled
1; Break inputs (BRK and CCS clock failure event) enabled

*Note: **1.** This bit cannot be modified when LOCK level 1 has been programmed (LOCK bits in TIMx_BDTR register).*

__2.__ Any write operation to this bit takes a delay of 1 APB clock cycle to become effective.

Bit 11 **OSSR**: Off-state selection for Run mode

This bit is used when MOE=1 on channels that have a complementary output which are configured as outputs. OSSR is not implemented if no complementary output is implemented in the timer.

See OC/OCN enable description for more details (*Section 27.5.8: TIM15 capture/compare enable register (TIM15_CCER) on page 833*).

0: When inactive, OC/OCN outputs are disabled (the timer releases the output control which is taken over by the AFIO logic, which forces a Hi-Z state)

1: When inactive, OC/OCN outputs are enabled with their inactive level as soon as CCxE=1 or CCxNE=1 (the output is still controlled by the timer).

Note: This bit can not be modified as soon as the LOCK level 2 has been programmed (LOCK bits in TIMx_BDTR register).

Bit 10 **OSSI**: Off-state selection for Idle mode

This bit is used when MOE=0 on channels configured as outputs.

See OC/OCN enable description for more details (*Section 27.5.8: TIM15 capture/compare enable register (TIM15_CCER) on page 833*).

0: When inactive, OC/OCN outputs are disabled (OC/OCN enable output signal=0)

1: When inactive, OC/OCN outputs are forced first with their idle level as soon as CCxE=1 or CCxNE=1. OC/OCN enable output signal=1)

Note: This bit can not be modified as soon as the LOCK level 2 has been programmed (LOCK bits in TIMx_BDTR register).

Bits 9:8 **LOCK[1:0]**: Lock configuration

These bits offer a write protection against software errors.

00: LOCK OFF - No bit is write protected

01: LOCK Level 1 = DTG bits in TIMx_BDTR register, OISx and OISxN bits in TIMx_CR2 register and BKE/BKP/AOE bits in TIMx_BDTR register can no longer be written.

10: LOCK Level 2 = LOCK Level 1 + CC Polarity bits (CCxP/CCxNP bits in TIMx_CCER register, as long as the related channel is configured in output through the CCxS bits) as well as OSSR and OSSI bits can no longer be written.

11: LOCK Level 3 = LOCK Level 2 + CC Control bits (OCxM and OCxPE bits in TIMx_CCMRx registers, as long as the related channel is configured in output through the CCxS bits) can no longer be written.

Note: The LOCK bits can be written only once after the reset. Once the TIMx_BDTR register has been written, their content is frozen until the next reset.

Bits 7:0 **DTG[7:0]**: Dead-time generator setup

This bit-field defines the duration of the dead-time inserted between the complementary outputs. DT correspond to this duration.

DTG[7:5]=0xx => DT=DTG[7:0]x t_{dtg} with $t_{dtg}=t_{DTS}$

DTG[7:5]=10x => DT=(64+DTG[5:0])xt_{dtg} with $T_{dtg}=2xt_{DTS}$

DTG[7:5]=110 => DT=(32+DTG[4:0])xt_{dtg} with $T_{dtg}=8xt_{DTS}$

DTG[7:5]=111 => DT=(32+DTG[4:0])xt_{dtg} with $T_{dtg}=16xt_{DTS}$

Example if T_{DTS}=125ns (8MHz), dead-time possible values are:

0 to 15875 ns by 125 ns steps,

16 µs to 31750 ns by 250 ns steps,

32 µs to 63 µs by 1 µs steps,

64 µs to 126 µs by 2 µs steps

Note: This bit-field can not be modified as long as LOCK level 1, 2 or 3 has been programmed (LOCK bits in TIMx_BDTR register).

27.6.14 TIM16 DMA control register (TIMx_DCR)

Address offset: 0x48

Reset value: 0x0000

15	14	13	12	11	10	9	8	7	6	5	4	3	2	1	0
Res	Res	Res	DBL[4:0]					Res	Res	Res	DBA[4:0]				
			rw	rw	rw	rw	rw				rw	rw	rw	rw	rw

Bits 15:13 Reserved, must be kept at reset value.

Bits 12:8 **DBL[4:0]**: DMA burst length

This 5-bit field defines the length of DMA transfers (the timer recognizes a burst transfer when a read or a write access is done to the TIMx_DMAR address), i.e. the number of transfers. Transfers can be in half-words or in bytes (see example below).

00000: 1 transfer,
00001: 2 transfers,
00010: 3 transfers,
...
10001: 18 transfers.

Bits 7:5 Reserved, must be kept at reset value.

Bits 4:0 **DBA[4:0]**: DMA base address

This 5-bit field defines the base-address for DMA transfers (when read/write access are done through the TIMx_DMAR address). DBA is defined as an offset starting from the address of the TIMx_CR1 register.
Example:
00000: TIMx_CR1,
00001: TIMx_CR2,
00010: TIMx_SMCR,
...

Example: Let us consider the following transfer: DBL = 7 transfers and DBA = TIMx_CR1. In this case the transfer is done to/from 7 registers starting from the TIMx_CR1 address.

27.6.15 TIM16 DMA address for full transfer (TIMx_DMAR)

Address offset: 0x4C

Reset value: 0x0000

15	14	13	12	11	10	9	8	7	6	5	4	3	2	1	0
DMAB[15:0]															
rw	rw	rw	rw	rw	rw	rw	rw	rw	rw	rw	rw	rw	rw	rw	rw

Bits 15:0 **DMAB[15:0]**: DMA register for burst accesses

A read or write operation to the DMAR register accesses the register located at the address

(TIMx_CR1 address) + (DBA + DMA index) x 4

where TIMx_CR1 address is the address of the control register 1, DBA is the DMA base address configured in TIMx_DCR register, DMA index is automatically controlled by the DMA transfer, and ranges from 0 to DBL (DBL configured in TIMx_DCR).

27.6.16 TIM16 option register 1 (TIM16_OR1)

Address offset: 0x50

Reset value: 0x0000

31	30	29	28	27	26	25	24	23	22	21	20	19	18	17	16
Res	Res	Res	Res	Res	Res	Res	Res	Res	Res	Res	Res	Res	Res	Res	Res

15	14	13	12	11	10	9	8	7	6	5	4	3	2	1	0
Res	Res	Res	Res	Res	Res	Res	Res	Res	Res	Res	Res	Res	TI1_RMP[2:0]		
													rw	rw	rw

Bits 31:3 Reserved, must be kept at reset value.

Bits2:0 000: TIM16 input capture 1 is connected to I/O
001: TIM16 input capture 1 is connected to LSI
010: TIM16 input capture 1 is connected to LSE
011: TIM16 input capture 1 is connected to RTC wakeup interrupt
100: TIM16 input capture 1 is connected to MSI
101: TIM16 input capture 1 is connected to HSE/32
110: TIM16 input capture 1 is connected to MCO
111: reserved

27.6.17 TIM16 option register 2 (TIM16_OR2)

Address offset: 0x60

Reset value: 0x0000 0001

31	30	29	28	27	26	25	24	23	22	21	20	19	18	17	16
Res	Res	Res	Res	Res	Res	Res	Res	Res	Res	Res	Res	Res	Res	Res	Res

15	14	13	12	11	10	9	8	7	6	5	4	3	2	1	0
Res	Res	Res	Res	BKCMP2P	BKCMP1P	BKINP	Res	Res	Res	Res	Res	Res	BKCMP2E	BKCMP1E	BKINE
				rw	rw	rw							rw	rw	rw

Bits 31:12 Reserved, must be kept at reset value.

Bit 11 **BKCMP2P**: BRK COMP2 input polarity
This bit selects the COMP2 input sensitivity. It must be programmed together with the BKP polarity bit.
0: COMP2 input is active low
1: COMP2 input is active high

Note: This bit can not be modified as long as LOCK level 1 has been programmed (LOCK bits in TIMx_BDTR register).

Bit 10 **BKCMP1P**: BRK COMP1 input polarity
This bit selects the COMP1 input sensitivity. It must be programmed together with the BKP polarity bit.
0: COMP1 input is active low
1: COMP1 input is active high

Note: This bit can not be modified as long as LOCK level 1 has been programmed (LOCK bits in TIMx_BDTR register).

Bit 9 **BKINP**: BRK BKIN input polarity

This bit selects the BKIN alternate function input sensitivity. It must be programmed together with the BKP polarity bit.

0: BKIN input is active low
1: BKIN input is active high

Note: This bit can not be modified as long as LOCK level 1 has been programmed (LOCK bits in TIMx_BDTR register).

Bits 8:3 Reserved, must be kept at reset value

Bit 2 **BKCMP2E**: BRK COMP2 enable

This bit enables the COMP2 for the timer's BRK input. COMP2 output is 'ORed' with the other BRK sources.

0: COMP2 input disabled
1: COMP2 input enabled

Note: This bit can not be modified as long as LOCK level 1 has been programmed (LOCK bits in TIMx_BDTR register).

Bit 1 **BKCMP1E**: BRK COMP1 enable

This bit enables the COMP1 for the timer's BRK input. COMP1 output is 'ORed' with the other BRK sources.

0: COMP1 input disabled
1: COMP1 input enabled

Note: This bit can not be modified as long as LOCK level 1 has been programmed (LOCK bits in TIMx_BDTR register).

Bit 0 **BKINE**: BRK BKIN input enable

This bit enables the BKIN alternate function input for the timer's BRK input. BKIN input is 'ORed' with the other BRK sources.

0: BKIN input disabled
1: BKIN input enabled

Note: This bit can not be modified as long as LOCK level 1 has been programmed (LOCK bits in TIMx_BDTR register).

27.6.18 TIM16 register map

TIM16 register is mapped as 16-bit addressable register as described in the table below:

Table 122. TIM16 register map and reset values

Offset	Register	31	30	29	28	27	26	25	24	23	22	21	20	19	18	17	16	15	14	13	12	11	10	9	8	7	6	5	4	3	2	1	0
0x00	**TIMx_CR1**	Res	Res	Res	Res	Res	Res	Res	Res	Res	Res	Res	Res	Res	Res	Res	Res	Res	Res	Res	Res	UIFREMAP	Res	CKD [1:0]		ARPE	Res	Res	Res	OPM	URS	UDIS	CEN
	Reset value																					0		0	0	0				0	0	0	0
0x04	**TIMx_CR2**	Res	Res	Res	Res	Res	Res	Res	Res	Res	Res	Res	Res	Res	Res	Res	Res	Res	Res	Res	Res	Res	Res	OIS1N	OIS1	Res	Res	Res	Res	CCDS	CCUS	Res	CCPC
	Reset value																							0	0					0	0		0
0x0C	**TIMx_DIER**	Res	Res	Res	Res	Res	Res	Res	Res	Res	Res	Res	Res	Res	Res	Res	Res	Res	TDE	COMDE	Res	Res	Res	CC1DE	UDE	BIE	Res	COMIE	Res	Res	Res	CC1IE	UIE
	Reset value																		0	0				0	0	0		0				0	0
0x10	**TIMx_SR**	Res	Res	Res	Res	Res	Res	Res	Res	Res	Res	Res	Res	Res	Res	Res	Res	Res	Res	Res	Res	Res	Res	CC1OF	Res	BIF	Res	COMIF	Res	Res	Res	CC1IF	UIF
	Reset value																							0		0		0				0	0
0x14	**TIMx_EGR**	Res	Res	Res	Res	Res	Res	Res	Res	Res	Res	Res	Res	Res	Res	Res	Res	Res	Res	Res	Res	Res	Res	Res	Res	BG	Res	COMG	Res	Res	Res	CC1G	UG
	Reset value																									0		0				0	0
0x18	**TIMx_CCMR1** Output Compare mode	Res	Res	Res	Res	Res	Res	Res	Res	Res	Res	Res	Res	Res	Res	Res	OC1M[3]	Res	Res	Res	Res	Res	Res	Res	Res	Res	OC1M [2:0]			OC1PE	OC1FE	CC1S [1:0]	
	Reset value																0										0	0	0	0	0	0	0
	TIMx_CCMR1 Input Capture mode	Res	Res	Res	Res	Res	Res	Res	Res	Res	Res	Res	Res	Res	Res	Res	Res	Res	Res	Res	Res	Res	Res	Res	Res	IC1F[3:0]				IC1PSC [1:0]		CC1S [1:0]	
	Reset value																									0	0	0	0	0	0	0	0
0x20	**TIMx_CCER**	Res	Res	Res	Res	Res	Res	Res	Res	Res	Res	Res	Res	Res	Res	Res	Res	Res	Res	Res	Res	Res	Res	Res	Res	Res	Res	Res	Res	CC1NP	CC1NE	CC1P	CC1E
	Reset value																													0	0	0	0
0x24	**TIMx_CNT**	UIFCPY or Res.	Res	Res	Res	Res	Res	Res	Res	Res	Res	Res	Res	Res	Res	Res	Res	CNT[15:0]															
	Reset value	0																0	0	0	0	0	0	0	0	0	0	0	0	0	0	0	0
0x28	**TIMx_PSC**	Res	Res	Res	Res	Res	Res	Res	Res	Res	Res	Res	Res	Res	Res	Res	Res	PSC[15:0]															
	Reset value																	0	0	0	0	0	0	0	0	0	0	0	0	0	0	0	0
0x2C	**TIMx_ARR**	Res	Res	Res	Res	Res	Res	Res	Res	Res	Res	Res	Res	Res	Res	Res	Res	ARR[15:0]															
	Reset value																	1	1	1	1	1	1	1	1	1	1	1	1	1	1	1	1

Table 122. TIM16 register map and reset values (continued)

Offset	Register	31	30	29	28	27	26	25	24	23	22	21	20	19	18	17	16	15	14	13	12	11	10	9	8	7	6	5	4	3	2	1	0
0x30	**TIMx_RCR**	Res	Res	Res	Res	Res	Res	Res	Res	Res	Res	Res	Res	Res	Res	Res	Res	Res	Res	Res	Res	Res	Res	Res	Res	REP[7:0]							
	Reset value																									0	0	0	0	0	0	0	0
0x34	**TIMx_CCR1**	Res	Res	Res	Res	Res	Res	Res	Res	Res	Res	Res	Res	Res	Res	Res	Res	CCR1[15:0]															
	Reset value																	0	0	0	0	0	0	0	0	0	0	0	0	0	0	0	0
0x44	**TIMx_BDTR**	Res	Res	Res	Res	Res	Res	Res	Res	Res	Res	Res	Res	Res	Res	Res	Res	MOE	AOE	BKP	BKE	OSSR	OSSI	LOCK [1:0]		DT[7:0]							
	Reset value																	0	0	0	0	0	0	0	0	0	0	0	0	0	0	0	0
0x48	**TIMx_DCR**	Res	Res	Res	Res	Res	Res	Res	Res	Res	Res	Res	Res	Res	Res	Res	Res	Res	Res	Res	DBL[4:0]					Res	Res	Res	DBA[4:0]				
	Reset value																				0	0	0	0	0				0	0	0	0	0
0x4C	**TIMx_DMAR**	Res	Res	Res	Res	Res	Res	Res	Res	Res	Res	Res	Res	Res	Res	Res	Res	DMAB[15:0]															
	Reset value																	0	0	0	0	0	0	0	0	0	0	0	0	0	0	0	0
0x50	**TIM16_OR1**	Res	Res	Res	Res	Res	Res	Res	Res	Res	Res	Res	Res	Res	Res	Res	Res	Res	Res	Res	Res	Res	Res	Res	Res	Res	Res	Res	Res	Res	TI1_RMP [2:0]		
	Reset value																														0	0	0
0x60	**TIM16_OR2**	Res	Res	Res	Res	Res	Res	Res	Res	Res	Res	Res	Res	Res	Res	Res	Res	Res	Res	Res	Res	BKCMP2P	BKCMP1P	BKINP	Res	Res	Res	Res	Res	Res	BKCMP2E	BKCMP1E	BKINE
	Reset value																					0	0	0							0	0	1

Refer to *Section 2.2.2 on page 62* for the register boundary addresses.

28 Basic timers (TIM6/TIM7)

28.1 TIM6/TIM7 introduction

The basic timers TIM6 and TIM7 consist of a 16-bit auto-reload counter driven by a programmable prescaler.

They may be used as generic timers for time-base generation but they are also specifically used to drive the digital-to-analog converter (DAC). In fact, the timers are internally connected to the DAC and are able to drive it through their trigger outputs.

The timers are completely independent, and do not share any resources.

28.2 TIM6/TIM7 main features

Basic timer (TIM6/TIM7) features include:

- 16-bit auto-reload upcounter
- 16-bit programmable prescaler used to divide (also “on the fly”) the counter clock frequency by any factor between 1 and 65535
- Synchronization circuit to trigger the DAC
- Interrupt/DMA generation on the update event: counter overflow

Figure 304. Basic timer block diagram

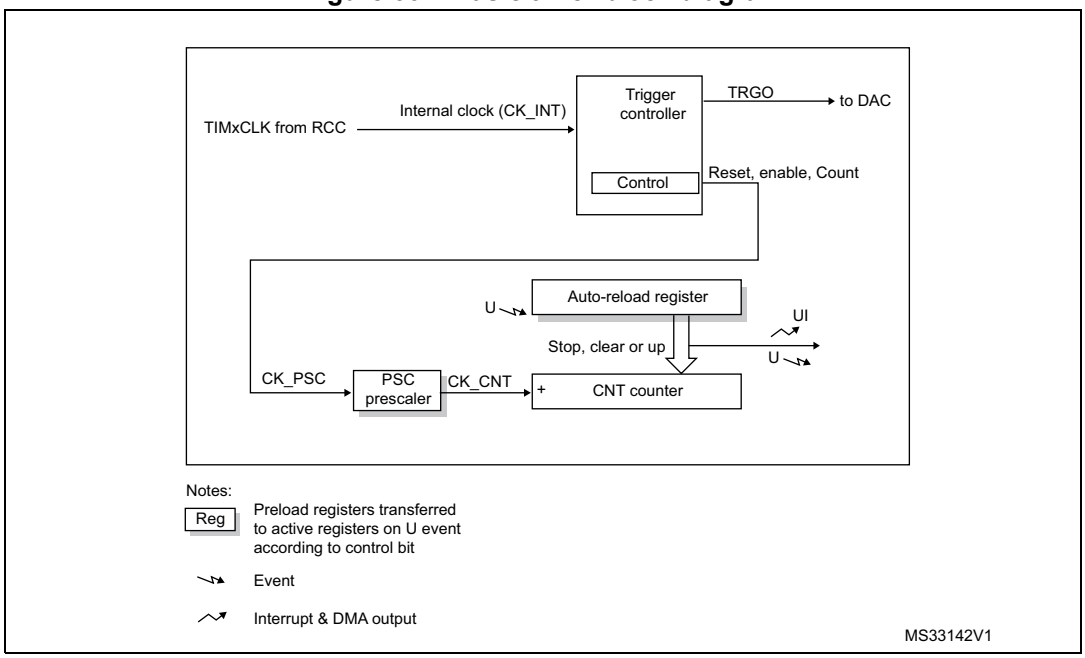

28.3 TIM6/TIM7 functional description

28.3.1 Time-base unit

The main block of the programmable timer is a 16-bit upcounter with its related auto-reload register. The counter clock can be divided by a prescaler.

The counter, the auto-reload register and the prescaler register can be written or read by software. This is true even when the counter is running.

The time-base unit includes:

- Counter Register (TIMx_CNT)
- Prescaler Register (TIMx_PSC)
- Auto-Reload Register (TIMx_ARR)

The auto-reload register is preloaded. The preload register is accessed each time an attempt is made to write or read the auto-reload register. The contents of the preload register are transferred into the shadow register permanently or at each update event UEV, depending on the auto-reload preload enable bit (ARPE) in the TIMx_CR1 register. The update event is sent when the counter reaches the overflow value and if the UDIS bit equals 0 in the TIMx_CR1 register. It can also be generated by software. The generation of the update event is described in detail for each configuration.

The counter is clocked by the prescaler output CK_CNT, which is enabled only when the counter enable bit (CEN) in the TIMx_CR1 register is set.

Note that the actual counter enable signal CNT_EN is set 1 clock cycle after CEN.

Prescaler description

The prescaler can divide the counter clock frequency by any factor between 1 and 65536. It is based on a 16-bit counter controlled through a 16-bit register (in the TIMx_PSC register). It can be changed on the fly as the TIMx_PSC control register is buffered. The new prescaler ratio is taken into account at the next update event.

Figure 305 and *Figure 306* give some examples of the counter behavior when the prescaler ratio is changed on the fly.

Figure 305. Counter timing diagram with prescaler division change from 1 to 2

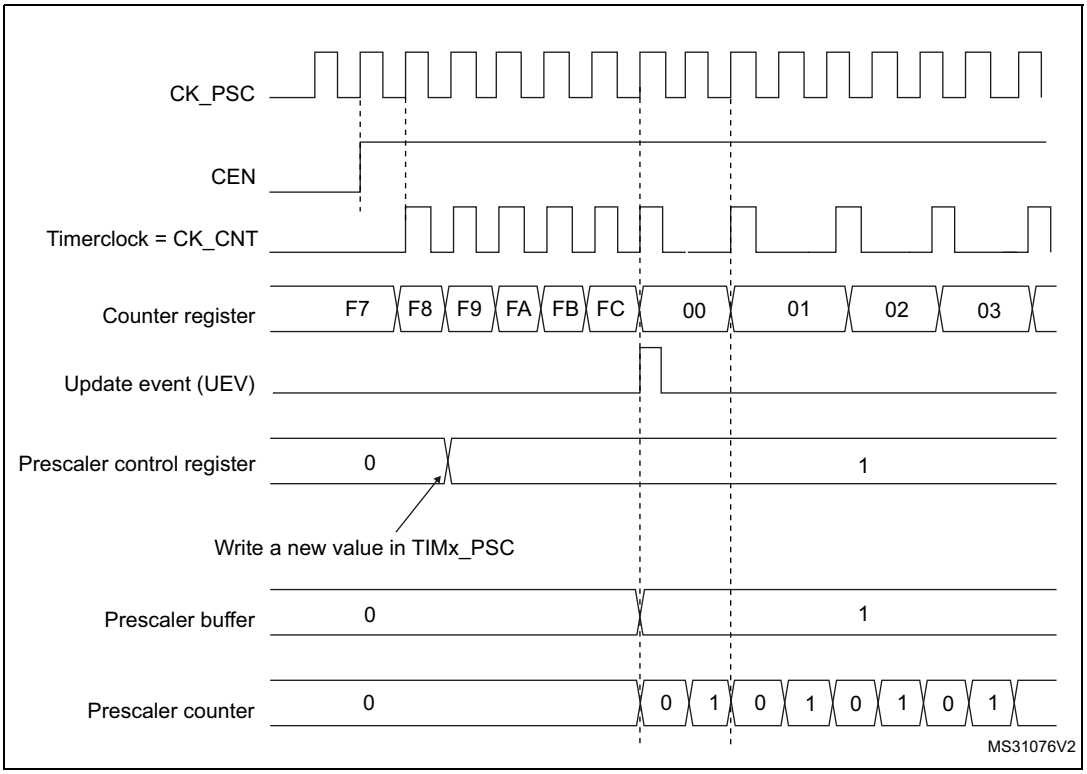

Figure 306. Counter timing diagram with prescaler division change from 1 to 4

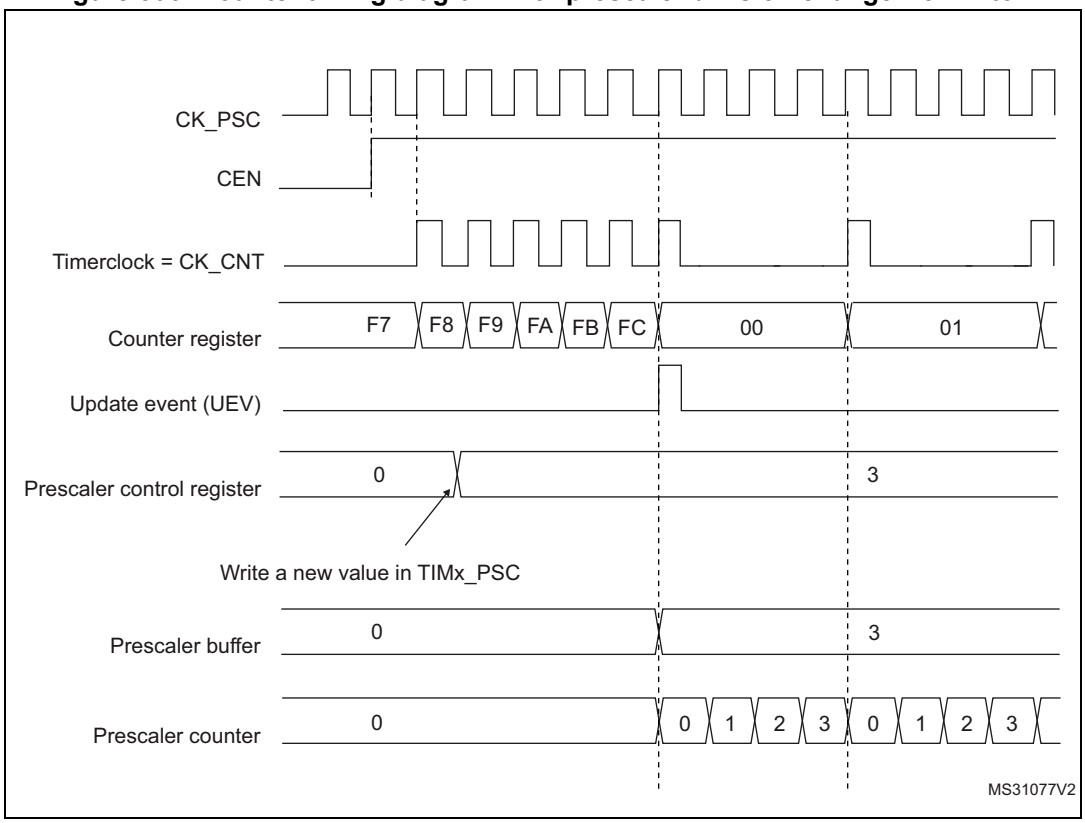

28.3.2 Counting mode

The counter counts from 0 to the auto-reload value (contents of the TIMx_ARR register), then restarts from 0 and generates a counter overflow event.

An update event can be generate at each counter overflow or by setting the UG bit in the TIMx_EGR register (by software or by using the slave mode controller).

The UEV event can be disabled by software by setting the UDIS bit in the TIMx_CR1 register. This avoids updating the shadow registers while writing new values into the preload registers. In this way, no update event occurs until the UDIS bit has been written to 0, however, the counter and the prescaler counter both restart from 0 (but the prescale rate does not change). In addition, if the URS (update request selection) bit in the TIMx_CR1 register is set, setting the UG bit generates an update event UEV, but the UIF flag is not set (so no interrupt or DMA request is sent).

When an update event occurs, all the registers are updated and the update flag (UIF bit in the TIMx_SR register) is set (depending on the URS bit):

- The buffer of the prescaler is reloaded with the preload value (contents of the TIMx_PSC register)
- The auto-reload shadow register is updated with the preload value (TIMx_ARR)

The following figures show some examples of the counter behavior for different clock frequencies when TIMx_ARR = 0x36.

Figure 307. Counter timing diagram, internal clock divided by 1

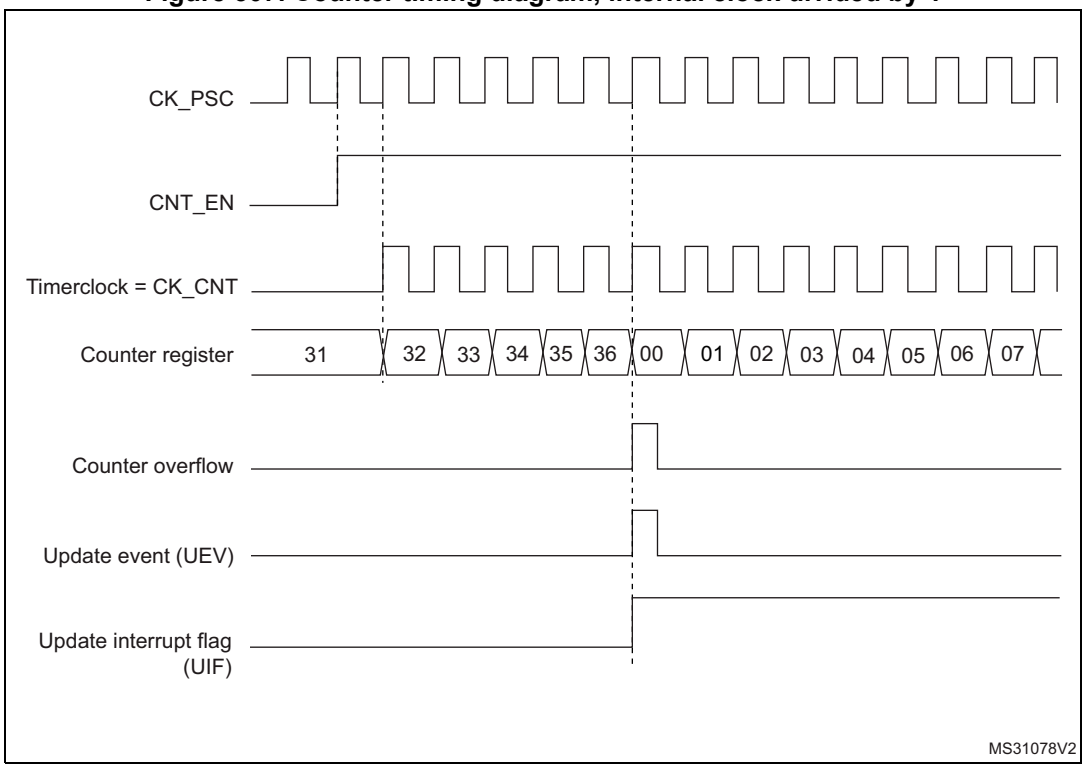

Figure 308. Counter timing diagram, internal clock divided by 2

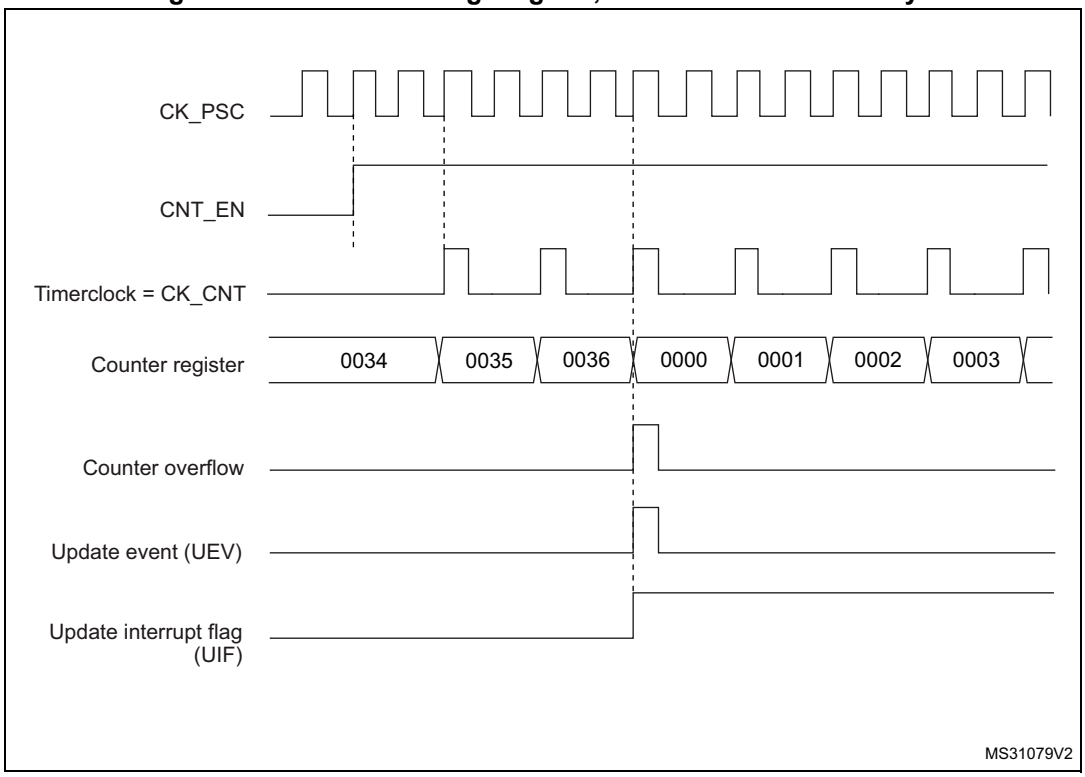

Figure 309. Counter timing diagram, internal clock divided by 4

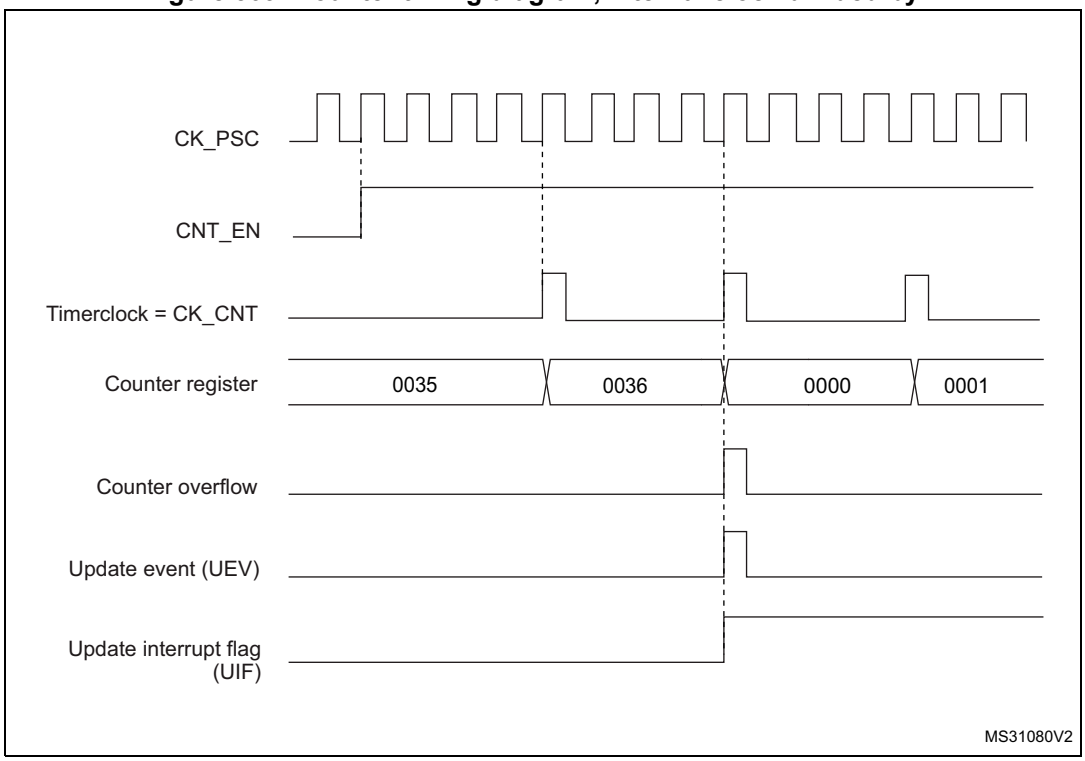

Figure 310. Counter timing diagram, internal clock divided by N

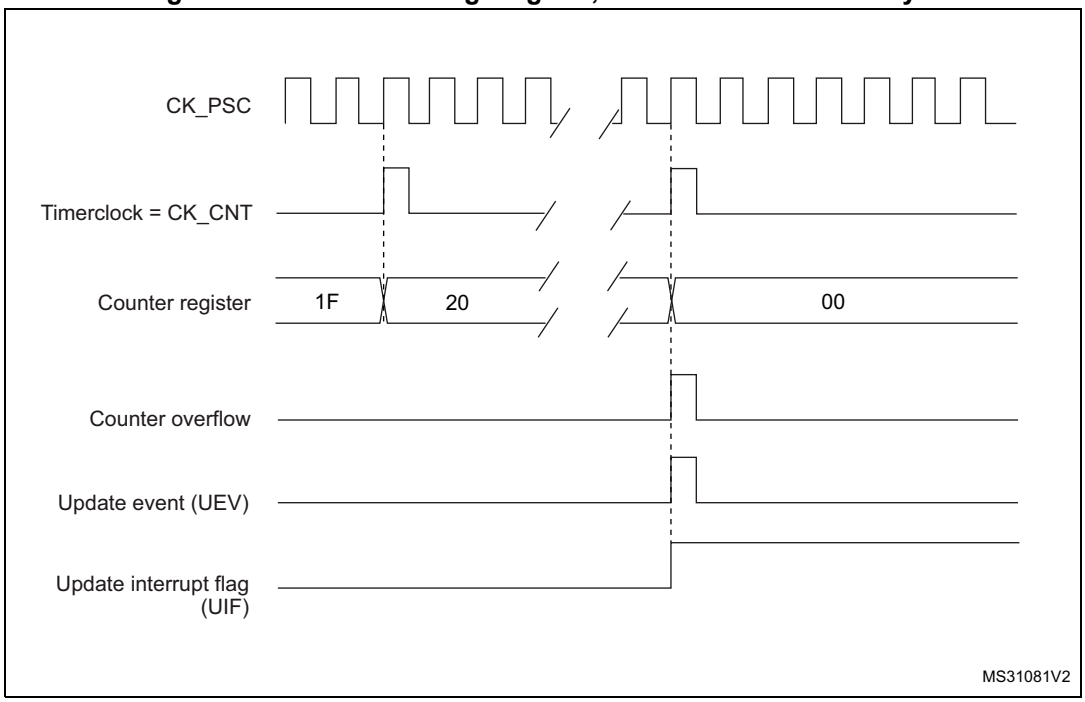

Figure 311. Counter timing diagram, update event when ARPE = 0 (TIMx_ARR not preloaded)

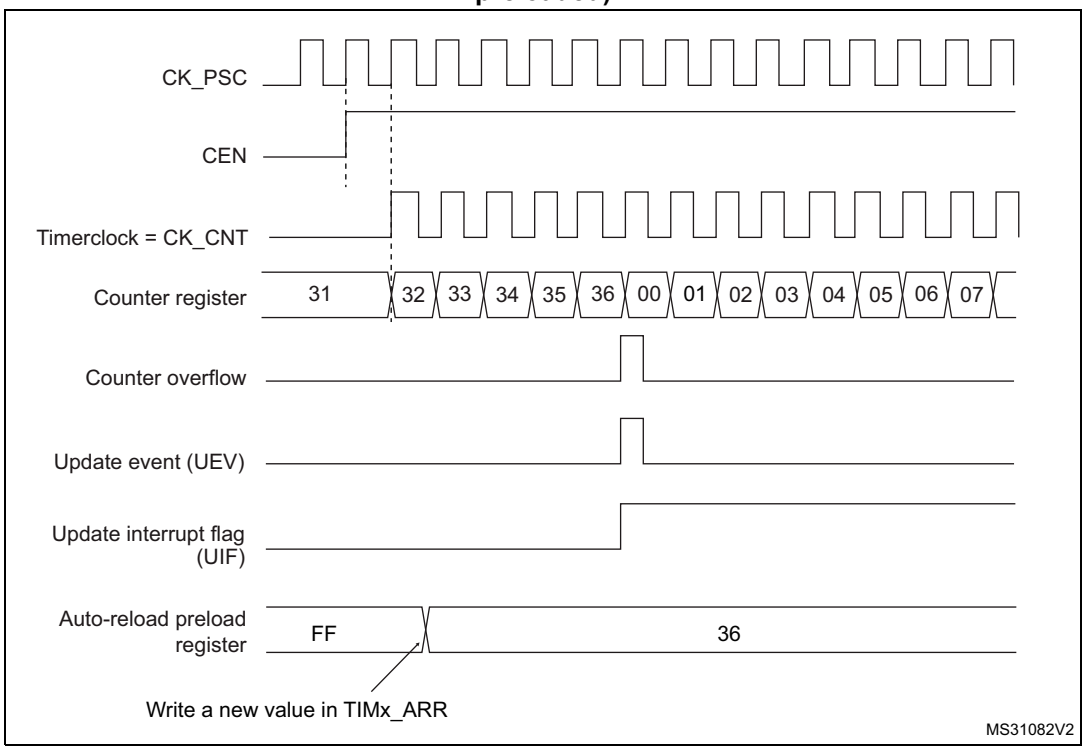

Figure 312. Counter timing diagram, update event when ARPE=1 (TIMx_ARR preloaded)

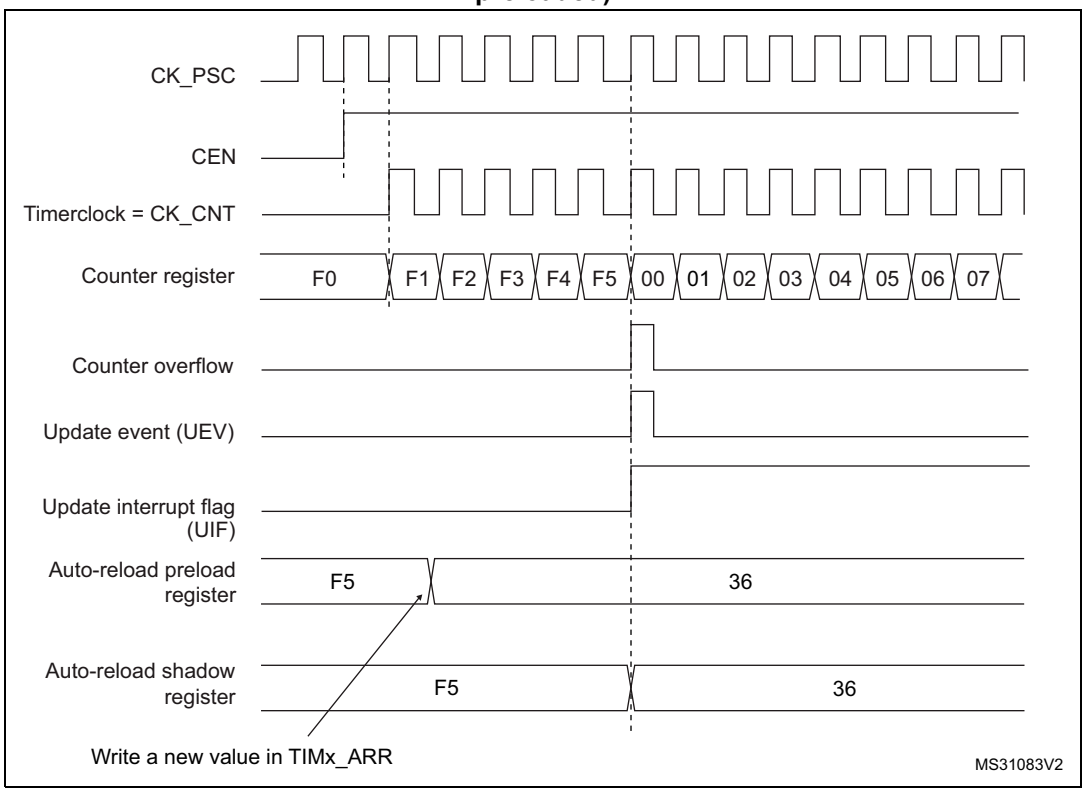

28.3.3 UIF bit remapping

The IUFREMAP bit in the TIMx_CR1 register forces a continuous copy of the Update Interrupt Flag UIF into the timer counter register's bit 31 (TIMxCNT[31]). This allows to atomically read both the counter value and a potential roll-over condition signaled by the UIFCPY flag. In particular cases, it can ease the calculations by avoiding race conditions caused for instance by a processing shared between a background task (counter reading) and an interrupt (Update Interrupt).

There is no latency between the assertions of the UIF and UIFCPY flags.

28.3.4 Clock source

The counter clock is provided by the Internal clock (CK_INT) source.

The CEN (in the TIMx_CR1 register) and UG bits (in the TIMx_EGR register) are actual control bits and can be changed only by software (except for UG that remains cleared automatically). As soon as the CEN bit is written to 1, the prescaler is clocked by the internal clock CK_INT.

Figure 313 shows the behavior of the control circuit and the upcounter in normal mode, without prescaler.

Figure 313. Control circuit in normal mode, internal clock divided by 1

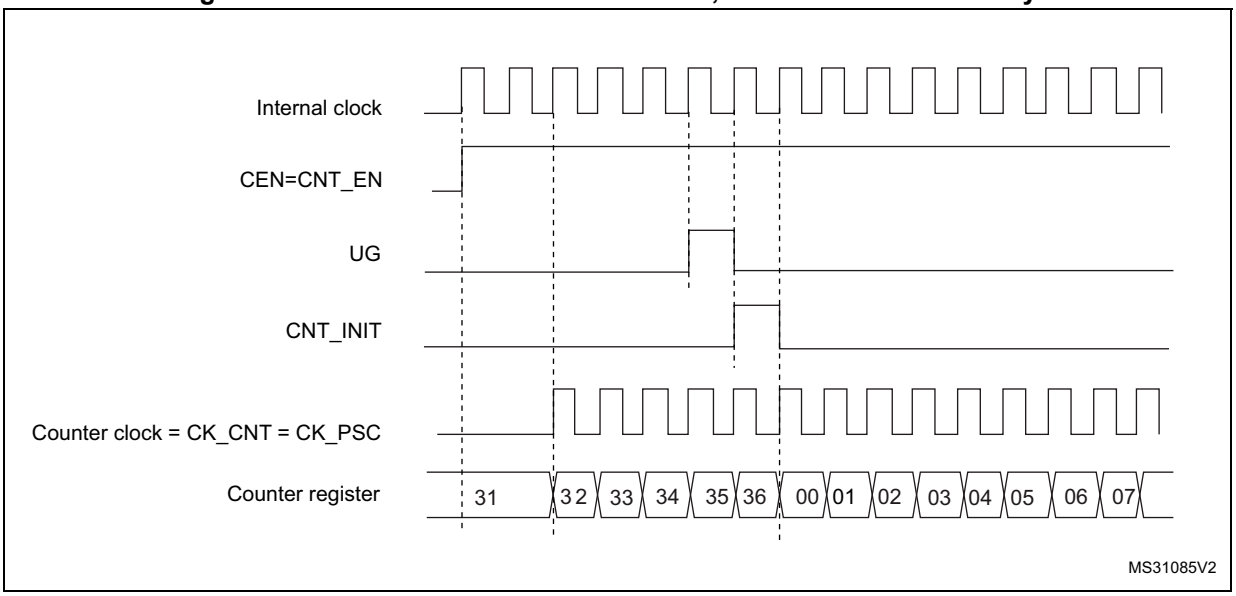

28.3.5 Debug mode

When the microcontroller enters the debug mode (Cortex®-M4 core - halted), the TIMx counter either continues to work normally or stops, depending on the DBG_TIMx_STOP configuration bit in the DBG module. For more details, refer to *Section 43.16.2: Debug support for timers, RTC, watchdog, bxCAN and I2C*.

28.4 TIM6/TIM7 registers

Refer to *Section 1.1 on page 55* for a list of abbreviations used in register descriptions.

The peripheral registers can be accessed by half-words (16-bit) or words (32-bit).

28.4.1 TIM6/TIM7 control register 1 (TIMx_CR1)

Address offset: 0x00

Reset value: 0x0000

15	14	13	12	11	10	9	8	7	6	5	4	3	2	1	0
Res	Res	Res	Res	UIF RE-MAP	Res	Res	Res	ARPE	Res	Res	Res	OPM	URS	UDIS	CEN
				rw				rw				rw	rw	rw	rw

Bits 15:12 Reserved, must be kept at reset value.

Bit 11 **UIFREMAP**: UIF status bit remapping

0: No remapping. UIF status bit is not copied to TIMx_CNT register bit 31.
1: Remapping enabled. UIF status bit is copied to TIMx_CNT register bit 31.

Bits 10:8 Reserved, must be kept at reset value.

Bit 7 **ARPE**: Auto-reload preload enable

0: TIMx_ARR register is not buffered.
1: TIMx_ARR register is buffered.

Bits 6:4 Reserved, must be kept at reset value.

Bit 3 **OPM**: One-pulse mode

0: Counter is not stopped at update event
1: Counter stops counting at the next update event (clearing the CEN bit).

Bit 2 **URS**: Update request source

This bit is set and cleared by software to select the UEV event sources.

0: Any of the following events generates an update interrupt or DMA request if enabled. These events can be:

- Counter overflow/underflow
- Setting the UG bit
- Update generation through the slave mode controller

1: Only counter overflow/underflow generates an update interrupt or DMA request if enabled.

Bit 1 **UDIS**: Update disable

This bit is set and cleared by software to enable/disable UEV event generation.

0: UEV enabled. The Update (UEV) event is generated by one of the following events:

- Counter overflow/underflow
- Setting the UG bit
- Update generation through the slave mode controller

Buffered registers are then loaded with their preload values.

1: UEV disabled. The Update event is not generated, shadow registers keep their value (ARR, PSC). However the counter and the prescaler are reinitialized if the UG bit is set or if a hardware reset is received from the slave mode controller.

Bit 0 **CEN**: Counter enable

0: Counter disabled
1: Counter enabled

Note: Gated mode can work only if the CEN bit has been previously set by software. However trigger mode can set the CEN bit automatically by hardware.

CEN is cleared automatically in one-pulse mode, when an update event occurs.

28.4.2 TIM6/TIM7 control register 2 (TIMx_CR2)

Address offset: 0x04

Reset value: 0x0000

15	14	13	12	11	10	9	8	7	6	5	4	3	2	1	0
Res	Res	Res	Res	Res	Res	Res	Res	Res	MMS[2:0]			Res	Res	Res	Res
									rw	rw	rw				

Bits 15:7 Reserved, must be kept at reset value.

Bits 6:4 **MMS**: Master mode selection

These bits are used to select the information to be sent in master mode to slave timers for synchronization (TRGO). The combination is as follows:

000: **Reset** - the UG bit from the TIMx_EGR register is used as a trigger output (TRGO). If reset is generated by the trigger input (slave mode controller configured in reset mode) then the signal on TRGO is delayed compared to the actual reset.

001: **Enable** - the Counter enable signal, CNT_EN, is used as a trigger output (TRGO). It is useful to start several timers at the same time or to control a window in which a slave timer is enabled. The Counter Enable signal is generated by a logic OR between CEN control bit and the trigger input when configured in gated mode.

When the Counter Enable signal is controlled by the trigger input, there is a delay on TRGO, except if the master/slave mode is selected (see the MSM bit description in the TIMx_SMCR register).

010: **Update** - The update event is selected as a trigger output (TRGO). For instance a master timer can then be used as a prescaler for a slave timer.

Note: The clock of the slave timer or ADC must be enabled prior to receive events from the master timer, and must not be changed on-the-fly while triggers are received from the master timer.

Bits 3:0 Reserved, must be kept at reset value.

28.4.3 TIM6/TIM7 DMA/Interrupt enable register (TIMx_DIER)

Address offset: 0x0C

Reset value: 0x0000

15	14	13	12	11	10	9	8	7	6	5	4	3	2	1	0
Res	Res	Res	Res	Res	Res	Res	UDE	Res	Res	Res	Res	Res	Res	Res	UIE
							rw								rw

Bits 15:9 Reserved, must be kept at reset value.

Bit 8 **UDE**: Update DMA request enable

0: Update DMA request disabled.
1: Update DMA request enabled.

Bits 7:1 Reserved, must be kept at reset value.

Bit 0 **UIE**: Update interrupt enable

0: Update interrupt disabled.
1: Update interrupt enabled.

28.4.4 TIM6/TIM7 status register (TIMx_SR)

Address offset: 0x10

Reset value: 0x0000

15	14	13	12	11	10	9	8	7	6	5	4	3	2	1	0
Res	Res	Res	Res	Res	Res	Res	Res	Res	Res	Res	Res	Res	Res	Res	UIF
															rc_w0

Bits 15:1 Reserved, must be kept at reset value.

Bit 0 **UIF**: Update interrupt flag

This bit is set by hardware on an update event. It is cleared by software.

0: No update occurred.

1: Update interrupt pending. This bit is set by hardware when the registers are updated:

– At overflow or underflow regarding the repetition counter value and if UDIS = 0 in the TIMx_CR1 register.

– When CNT is reinitialized by software using the UG bit in the TIMx_EGR register, if URS = 0 and UDIS = 0 in the TIMx_CR1 register.

28.4.5 TIM6/TIM7 event generation register (TIMx_EGR)

Address offset: 0x14

Reset value: 0x0000

15	14	13	12	11	10	9	8	7	6	5	4	3	2	1	0
Res	Res	Res	Res	Res	Res	Res	Res	Res	Res	Res	Res	Res	Res	Res	UG
															w

Bits 15:1 Reserved, must be kept at reset value.

Bit 0 **UG**: Update generation

This bit can be set by software, it is automatically cleared by hardware.

0: No action.

1: Re-initializes the timer counter and generates an update of the registers. Note that the prescaler counter is cleared too (but the prescaler ratio is not affected).

28.4.6 TIM6/TIM7 counter (TIMx_CNT)

Address offset: 0x24

Reset value: 0x0000

31	30	29	28	27	26	25	24	23	22	21	20	19	18	17	16
UIF CPY	Res	Res	Res	Res	Res	Res	Res	Res	Res	Res	Res	Res	Res	Res	Res
r															

15	14	13	12	11	10	9	8	7	6	5	4	3	2	1	0
CNT[15:0]															
rw	rw	rw	rw	rw	rw	rw	rw	rw	rw	rw	rw	rw	rw	rw	rw

Bit 31 **UIFCPY**: UIF Copy
This bit is a read-only copy of the UIF bit of the TIMx_ISR register. If the UIFREMAP bit in TIMx_CR1 is reset, bit 31 is reserved and read as 0.

Bits 30:16 Reserved, must be kept at reset value.

Bits 15:0 **CNT[15:0]**: Counter value

28.4.7 TIM6/TIM7 prescaler (TIMx_PSC)

Address offset: 0x28

Reset value: 0x0000

15	14	13	12	11	10	9	8	7	6	5	4	3	2	1	0
PSC[15:0]															
rw	rw	rw	rw	rw	rw	rw	rw	rw	rw	rw	rw	rw	rw	rw	rw

Bits 15:0 **PSC[15:0]**: Prescaler value
The counter clock frequency CK_CNT is equal to f_{CK_PSC} / (PSC[15:0] + 1).
PSC contains the value to be loaded into the active prescaler register at each update event.
(including when the counter is cleared through UG bit of TIMx_EGR register or through trigger controller when configured in “reset mode”).

28.4.8 TIM6/TIM7 auto-reload register (TIMx_ARR)

Address offset: 0x2C

Reset value: 0xFFFF

15	14	13	12	11	10	9	8	7	6	5	4	3	2	1	0
ARR[15:0]															
rw	rw	rw	rw	rw	rw	rw	rw	rw	rw	rw	rw	rw	rw	rw	rw

Bits 15:0 **ARR[15:0]**: Prescaler value
ARR is the value to be loaded into the actual auto-reload register.
Refer to *Section 28.3.1: Time-base unit on page 866* for more details about ARR update and behavior.
The counter is blocked while the auto-reload value is null.

28.4.9 TIM6/TIM7 register map

TIMx registers are mapped as 16-bit addressable registers as described in the table below:

Table 123. TIM6/TIM7 register map and reset values

Offset	Register	31	30	29	28	27	26	25	24	23	22	21	20	19	18	17	16	15	14	13	12	11	10	9	8	7	6	5	4	3	2	1	0
0x00	TIMx_CR1	Res	Res	Res	Res	Res	Res	Res	Res	Res	Res	Res	Res	Res	Res	Res	Res	Res	Res	Res	Res	UIFREMAP	Res	Res	Res	ARPE	Res	Res	Res	OPM	URS	UDIS	CEN
	Reset value																					0				0				0	0	0	0
0x04	TIMx_CR2	Res	Res	Res	Res	Res	Res	Res	Res	Res	Res	Res	Res	Res	Res	Res	Res	Res	Res	Res	Res	Res	Res	Res	Res	Res	MMS [2:0]			Res	Res	Res	Res
	Reset value																										0	0	0				
0x08	Reserved																																
0x0C	TIMx_DIER	Res	Res	Res	Res	Res	Res	Res	Res	Res	Res	Res	Res	Res	Res	Res	Res	Res	Res	Res	Res	Res	Res	Res	UDE	Res	Res	Res	Res	Res	Res	Res	UIE
	Reset value																								0								0
0x10	TIMx_SR	Res	Res	Res	Res	Res	Res	Res	Res	Res	Res	Res	Res	Res	Res	Res	Res	Res	Res	Res	Res	Res	Res	Res	Res	Res	Res	Res	Res	Res	Res	Res	UIF
	Reset value																																0
0x14	TIMx_EGR	Res	Res	Res	Res	Res	Res	Res	Res	Res	Res	Res	Res	Res	Res	Res	Res	Res	Res	Res	Res	Res	Res	Res	Res	Res	Res	Res	Res	Res	Res	Res	UG
	Reset value																																0
0x18-0x20	Reserved																																
0x24	TIMx_CNT	UIFCPY or Res.	Res	Res	Res	Res	Res	Res	Res	Res	Res	Res	Res	Res	Res	Res	Res	CNT[15:0]															
	Reset value	0																0	0	0	0	0	0	0	0	0	0	0	0	0	0	0	0
0x28	TIMx_PSC	Res	Res	Res	Res	Res	Res	Res	Res	Res	Res	Res	Res	Res	Res	Res	Res	PSC[15:0]															
	Reset value																	0	0	0	0	0	0	0	0	0	0	0	0	0	0	0	0
0x2C	TIMx_ARR	Res	Res	Res	Res	Res	Res	Res	Res	Res	Res	Res	Res	Res	Res	Res	Res	ARR[15:0]															
	Reset value																	1	1	1	1	1	1	1	1	1	1	1	1	1	1	1	1

Refer to *Section 2.2.2: Memory map and register boundary addresses* for the register boundary addresses.

29 Low-power timer (LPTIM)

29.1 Introduction

The LPTIM is a 16-bit timer that benefits from the ultimate developments in power consumption reduction. Thanks to its diversity of clock sources, the LPTIM is able to keep running in all power modes except for Standby mode. Given its capability to run even with no internal clock source, the LPTIM can be used as a “Pulse Counter” which can be useful in some applications. Also, the LPTIM capability to wake up the system from low-power modes, makes it suitable to realize “Timeout functions” with extremely low power consumption.

The LPTIM introduces a flexible clock scheme that provides the needed functionalities and performance, while minimizing the power consumption.

29.2 LPTIM main features

- 16 bit upcounter
- 3-bit prescaler with 8 possible dividing factor (1,2,4,8,16,32,64,128)
- Selectable clock
  - Internal clock sources: LSE, LSI, HSI16 or APB clock
  - External clock source over ULPTIM input (working with no LP oscillator running, used by Pulse Counter application)
- 16 bit ARR autoreload register
- 16 bit compare register
- Continuous/one shot mode
- Selectable software/hardware input trigger
- Programmable Digital Glitch filter
- Configurable output: Pulse, PWM
- Configurable I/O polarity
- Encoder mode

29.3 LPTIM implementation

Table 124 describes LPTIM implementation on STM32L4xx devices: the full set of features is implemented in LPTIM1. LPTIM2 supports a smaller set of features, but is otherwise identical to LPTIM1.

Table 124. STM32L4xx LPTIM features

LPTIM modes/features(1)	LPTIM1	LPTIM2
Encoder mode	X	-

1. X = supported.

29.4 LPTIM functional description

29.4.1 LPTIM block diagram

Figure 314. Low-power timer block diagram

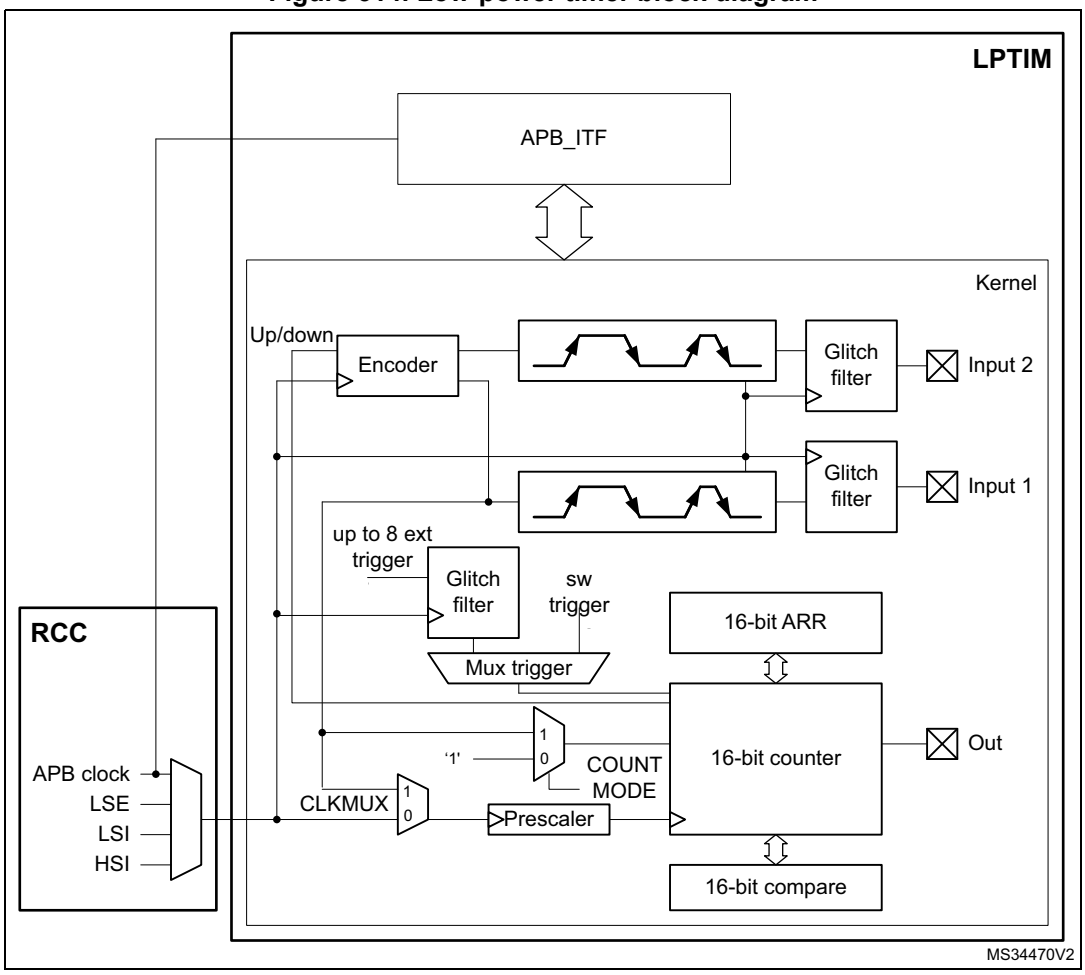

29.4.2 LPTIM reset and clocks

The LPTIM can be clocked using several clock sources. It can be clocked using an internal clock signal which can be chosen among APB, LSI, LSE or HSI16 sources through the Clock Tree controller (RCC). Also, the LPTIM can be clocked using an external clock signal injected on its external Input1. When clocked with an external clock source, the LPTIM may run in one of these two possible configurations:

- The first configuration is when the LPTIM is clocked by an external signal but in the same time an internal clock signal is provided to the LPTIM either from APB or any other embedded oscillator including LSE, LSI and HSI16.
- The second configuration is when the LPTIM is solely clocked by an external clock source through its external Input1. This configuration is the one used to realize Timeout function or Pulse counter function when all the embedded oscillators are turned off after entering a low-power mode.

Programming the CKSEL and COUNTMODE bits allows controlling whether the LPTIM will use an external clock source or an internal one.

When configured to use an external clock source, the CKPOL bits are used to select the external clock signal active edge. If both edges are configured to be active ones, an internal clock signal should also be provided (first configuration). In this case, the internal clock signal frequency should be at least four time higher than the external clock signal frequency.

29.4.3 Glitch filter

The LPTIM inputs, either external or internal, are protected with digital filters that prevent any glitches and noise perturbations to propagate inside the LPTIM. This is in order to prevent spurious counts or triggers.

Before activating the digital filters, an internal clock source should first be provided to the LPTIM. This is necessary to guarantee the proper operation of the filters.

The digital filters are divided into two groups:

- The first group of digital filters protects the LPTIM external inputs. The digital filters sensitivity is controlled by the CKFLT bits
- The second group of digital filters protects the LPTIM internal trigger inputs. The digital filters sensitivity is controlled by the TRGFLT bits.

Note: The digital filters sensitivity is controlled by groups. It is not possible to configure each digital filter sensitivity separately inside the same group.

The filter sensitivity acts on the number of consecutive equal samples that should be detected on one of the LPTIM inputs to consider a signal level change as a valid transition. *Figure 315* shows an example of glitch filter behavior in case of a 2 consecutive samples programmed.

Figure 315. Glitch filter timing diagram

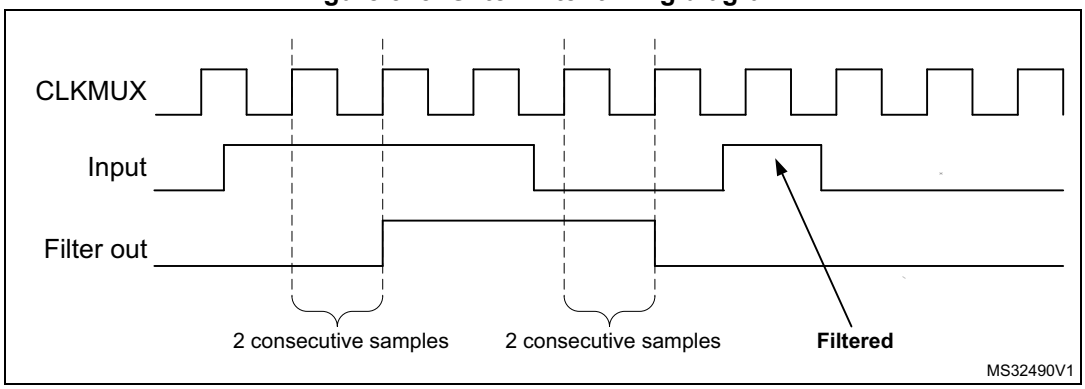

Note: In case no internal clock signal is provided, the digital filter must be deactivated by setting the CKFLT and TRGFLT bits to '0'. In that case, an external analog filter may be used to protect the LPTIM external inputs against glitches.

29.4.4 Prescaler

The LPTIM 16-bit counter is preceded by a configurable power-of-2 prescaler. The prescaler division ratio is controlled by the PRESC[2:0] 3-bit field. The table below lists all the possible division ratios:

Table 125. Prescaler division ratios

programming	dividing factor
000	/1
001	/2
010	/4
011	/8
100	/16
101	/32
110	/64
111	/128

29.4.5 Trigger multiplexer

The LPTIM counter may be started either by software or after the detection of an active edge on one of the 8 trigger inputs.

TRIGEN[1:0] is used to determine the LPTIM trigger source:

- When TRIGEN[1:0] equals ‘00’, The LPTIM counter is started as soon as one of the CNTSTRT or the SNGSTRT bits is set by software.
- The three remaining possible values for the TRIGEN[1:0] are used to configure the active edge used by the trigger inputs. The LPTIM counter starts as soon as an active edge is detected.

When TRIGEN[1:0] is different than ‘00’, TRIGSEL[2:0] is used to select which of the 8 trigger inputs is used to start the counter.

The external triggers are considered asynchronous signals for the LPTIM. So after a trigger detection, a two-counter-clock period latency is needed before the timer starts running due to the synchronization.

If a new trigger event occurs when the timer is already started it will be ignored (unless timeout function is enabled).

Note: The timer must be enabled before setting the SNGSTRT/CNTSTRT bits. Any write on these bits when the timer is disabled will be discarded by hardware.

29.4.6 Operating mode

The LPTIM features two operating modes:

- The Continuous mode: the timer is free running, the timer is started from a trigger event and never stops until the timer is disabled
- One shot mode: the timer is started from a trigger event and stops when reaching the ARR value.

A new trigger event will re-start the timer. Any trigger event occurring after the counter starts and before the counter reaches ARR will be discarded.

To enable the one shot counting, the SNGSTRT bit must be set.

In case an external trigger is selected, each external trigger event arriving after the SNGSTRT bit is set, and after the counter register has stopped (contains zero value), will start the counter for a new One-shot counting cycle as shown in *Figure 316*.

Figure 316. LPTIM output waveform, Single counting mode configuration

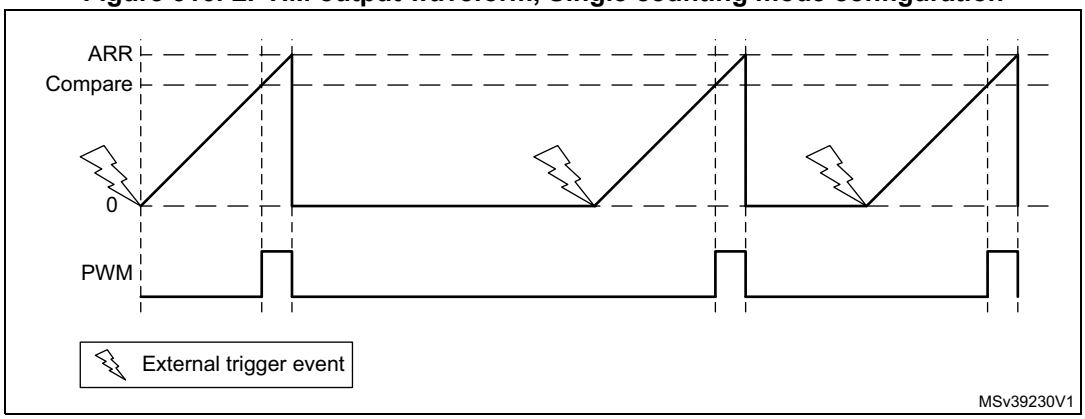

It should be noted that when the WAVE bit-field in the LPTIM_CFGR register is set, the Set-once mode is activated. In this case, the counter is only started once following the first trigger, and any subsequent trigger event is discarded as shown in *Figure 316*.

Figure 317. LPTIM output waveform, Single counting mode configuration and Set-once mode activated (WAVE bit is set)

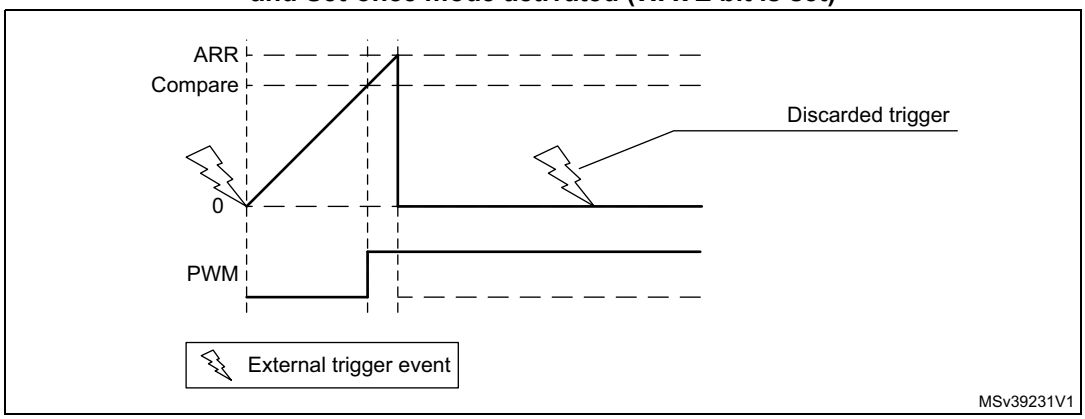

In case of software start (TRIGEN[1:0] = ‘00’), the SNGSTRT setting will start the counter for one shot counting.

To enable the continuous counting, the CNTSTRT bit must be set.

In case an external trigger is selected, an external trigger event arriving after CNTSTRT is set will start the counter for continuous counting. Any subsequent external trigger event will be discarded as shown in *Figure 318*.

In case of software start (TRIGEN[1:0] = ‘00’), setting CNTSTRT will start the counter for continuous counting.

Figure 318. LPTIM output waveform, Continuous counting mode configuration

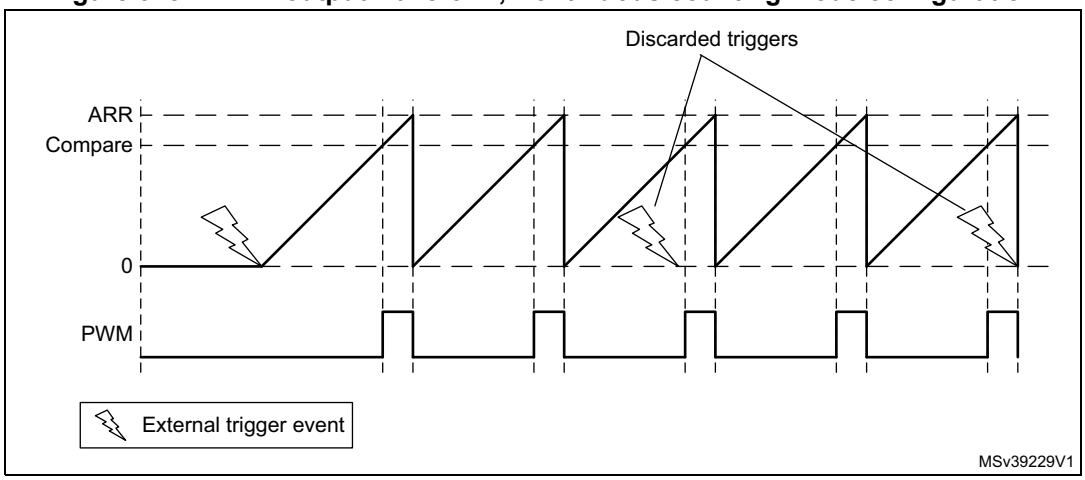

SNGSTRT and CNTSTRT bits can only be set when the timer is enabled (The ENABLE bit is set to ‘1’). It is possible to change “on the fly” from One Shot mode to Continuous mode.

If the Continuous mode was previously selected, setting SNGSTRT will switch the LPTIM to the One Shot mode. The counter (if active) will stop as soon as it reaches ARR.

If the One Shot mode was previously selected, setting CNTSTRT will switch the LPTIM to the Continuous mode. The counter (if active) will restart as soon as it reaches ARR.

29.4.7 Timeout function

The detection of an active edge on one selected trigger input can be used to reset the LPTIM counter. This feature is controlled through the TIMOUT bit.

The first trigger event will start the timer, any successive trigger event will reset the counter and the timer will restart.

A low-power timeout function can be realized. The timeout value corresponds to the compare value; if no trigger occurs within the expected time frame, the MCU is waked-up by the compare match event.

29.4.8 Waveform generation

Two 16-bit registers, the LPTIM_ARR (autoreload register) and LPTIM_CMP (Compare register), are used to generate several different waveforms on LPTIM output

The timer can generate the following waveforms:

- The PWM mode: the LPTIM output is set as soon as a match occurs between the LPTIM_CMP and the LPTIM_CNT registers. The LPTIM output is reset as soon as a match occurs between the LPTIM_ARR and the LPTIM_CNT registers
- The One-pulse mode: the output waveform is similar to the one of the PWM mode for the first pulse, then the output is permanently reset
- The Set-once mode: the output waveform is similar to the One-pulse mode except that the output is kept to the last signal level (depends on the output configured polarity).

The above described modes require that the LPTIM_ARR register value be strictly greater than the LPTIM_CMP register value.

The LPTIM output waveform can be configured through the WAVE bit as follow:

- Resetting the WAVE bit to ‘0’ forces the LPTIM to generate either a PWM waveform or a One pulse waveform depending on which bit is set: CNTSTRT or SNGSTRT.
- Setting the WAVE bit to ‘1’ forces the LPTIM to generate a Set-once mode waveform.

The WAVPOL bit controls the LPTIM output polarity. The change takes effect immediately, so the output default value will change immediately after the polarity is re-configured, even before the timer is enabled.

Signals with frequencies up to the LPTIM clock frequency divided by 2 can be generated. *Figure 319* below shows the three possible waveforms that can be generated on the LPTIM output. Also, it shows the effect of the polarity change using the WAVPOL bit.

Figure 319. Waveform generation

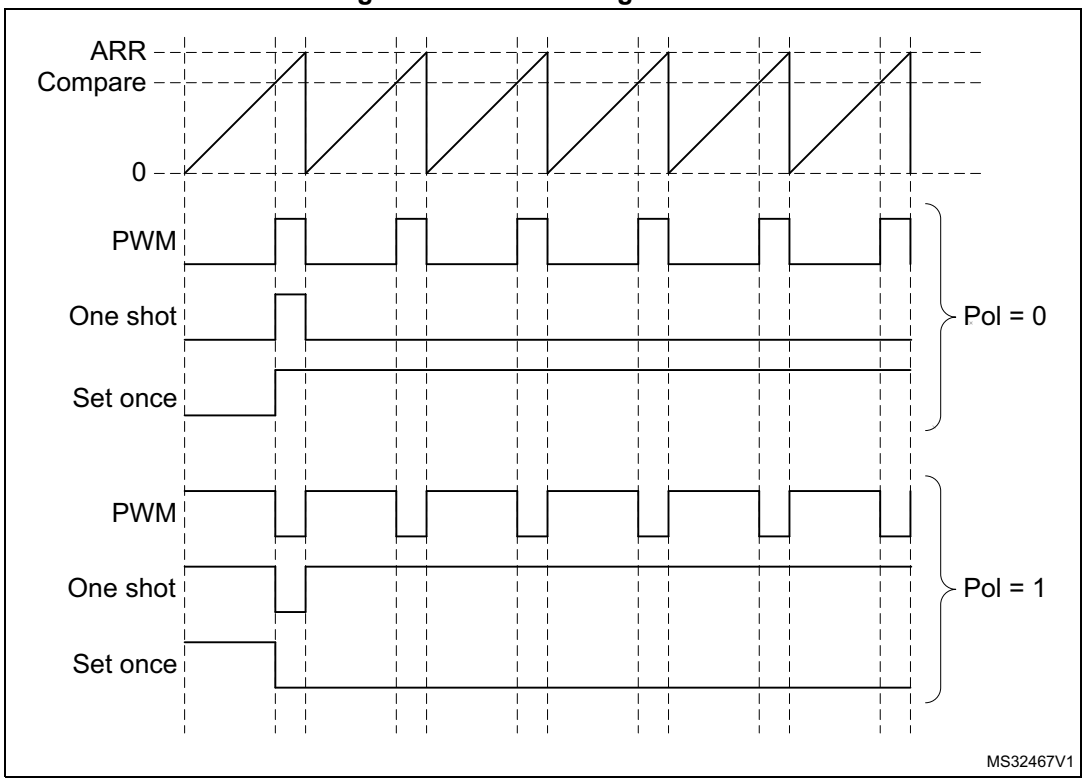

29.4.9 Register update

The LPTIM_ARR register and LPTIM_CMP register are updated immediately after the APB bus write operation, or at the end of the current period if the timer is already started.

The PRELOAD bit controls how the LPTIM_ARR and the LPTIM_CMP registers are updated:

- When the PRELOAD bit is reset to ‘0’, the LPTIM_ARR and the LPTIM_CMP registers are immediately updated after any write access.
- When the PRELOAD bit is set to ‘1’, the LPTIM_ARR and the LPTIM_CMP registers are updated at the end of the current period, if the timer has been already started.

The APB bus and the LPTIM use different clocks, so there is some latency between the APB write and the moment when these values are available to the counter comparator. Within this latency period, any additional write into these registers must be avoided.

The ARROK flag and the CMPOK flag in the LPTIM_ISR register indicate when the write operation is completed to respectively the LPTIM_ARR register and the LPTIM_CMP register.

After a write to the LPTIM_ARR register or the LPTIM_CMP register, a new write operation to the same register can only be performed when the previous write operation is completed. Any successive write before respectively the ARROK flag or the CMPOK flag be set, will lead to unpredictable results.

29.4.10 Counter mode

The LPTIM counter can be used to count external events on the LPTIM Input1 or it can be used to count internal clock cycles. The CKSEL and COUNTMODE bits control which source will be used for updating the counter.

In case the LPTIM is configured to count external events on Input1, the counter can be updated following a rising edge, falling edge or both edges depending on the value written to the CKPOL[1:0] bits.

The count modes below can be selected, depending on CKSEL and COUNTMODE values:

- CKSEL = 0: the LPTIM is clocked by an internal clock source
  - COUNTMODE = 0

    When the LPTIM is configured to be clocked by an internal clock source and the LPTIM counter is configured to be updated by active edges detected on the LPTIM external Input1, the internal clock provided to the LPTIM must be not be prescaled (PRESC[2:0] = ‘000’).
  - COUNTMODE = 1

    The LPTIM external Input1 is sampled with the internal clock provided to the LPTIM. Consequently, in order not to miss any event, the frequency of the changes on the external Input1 signal should never exceed the frequency of the internal clock provided to the LPTIM.
- CKSEL = 1: the LPTIM is clocked by an external clock source

  COUNTMODE value is don’t care.

  In this configuration, the LPTIM has no need for an internal clock source (except if the glitch filters are enabled). The signal injected on the LPTIM external Input1 is used as system clock for the LPTIM. This configuration is suitable for operation modes where no embedded oscillator is enabled.

  For this configuration, the LPTIM counter can be updated either on rising edges or falling edges of the input1 clock signal but not on both rising and falling edges.

  Since the signal injected on the LPTIM external Input1 is also used to clock the LPTIM, there is some initial latency (after the LPTIM is enabled) before the counter is incremented. More precisely, the first five active edges on the LPTIM external Input1 (after LPTIM is enable) are lost.

29.4.11 Timer enable

The ENABLE bit located in the LPTIM_CR register is used to enable/disable the LPTIM. After setting the ENABLE bit, a delay of two counter clock is needed before the LPTIM is actually enabled.

The LPTIM_CFGR and LPTIM_IER registers must be modified only when the LPTIM is disabled.

29.4.12 Encoder mode

This mode allows handling signals from quadrature encoders used to detect angular position of rotary elements. Encoder interface mode acts simply as an external clock with direction selection. This means that the counter just counts continuously between 0 and the auto-reload value programmed into the LPTIM_ARR register (0 up to ARR or ARR down to 0 depending on the direction). Therefore you must configure LPTIM_ARR before starting. From the two external input signals, Input1 and Input2, a clock signal is generated to clock the LPTIM counter. The phase between those two signals determines the counting direction.

The Encoder mode is only available when the LPTIM is clocked by an internal clock source. The signals frequency on both Input1 and Input2 inputs must not exceed the LPTIM internal clock frequency divided by 4. This is mandatory in order to guarantee a proper operation of the LPTIM.

Direction change is signalized by the two Down and Up flags in the LPTIM_ISR register. Also, an interrupt can be generated for both direction change events if enabled through the LPTIM_IER register.

To activate the Encoder mode the ENC bit has to be set to ‘1’. The LPTIM must first be configured in Continuous mode.

When Encoder mode is active, the LPTIM counter is modified automatically following the speed and the direction of the incremental encoder. Therefore, its content always represents the encoder’s position. The count direction, signaled by the Up and Down flags, correspond to the rotation direction of the connected sensor.

According to the edge sensitivity configured using the CKPOL[1:0] bits, different counting scenarios are possible. The following table summarizes the possible combinations, assuming that Input1 and Input2 do not switch at the same time.

Table 126. Encoder counting scenarios

Active edge	Level on opposite signal (Input1 for Input2, Input2 for Input1)	Input1 signal		Input2 signal	
		Rising	Falling	Rising	Falling
Rising Edge	High	Down	No count	Up	No count
	Low	Up	No count	Down	No count
Falling Edge	High	No count	Up	No count	Down
	Low	No count	Down	No count	Up
Both Edges	High	Down	Up	Up	Down
	Low	Up	Down	Down	Up

The following figure shows a counting sequence for Encoder mode where both edges sensitivity is configured.

Caution: In this mode the LPTIM must be clocked by an internal clock source, so the CKSEL bit must be maintained to its reset value which is equal to ‘0’. Also, the prescaler division ratio must be equal to its reset value which is 1 (PRESC[2:0] bits must be ‘000’).

Figure 320. Encoder mode counting sequence

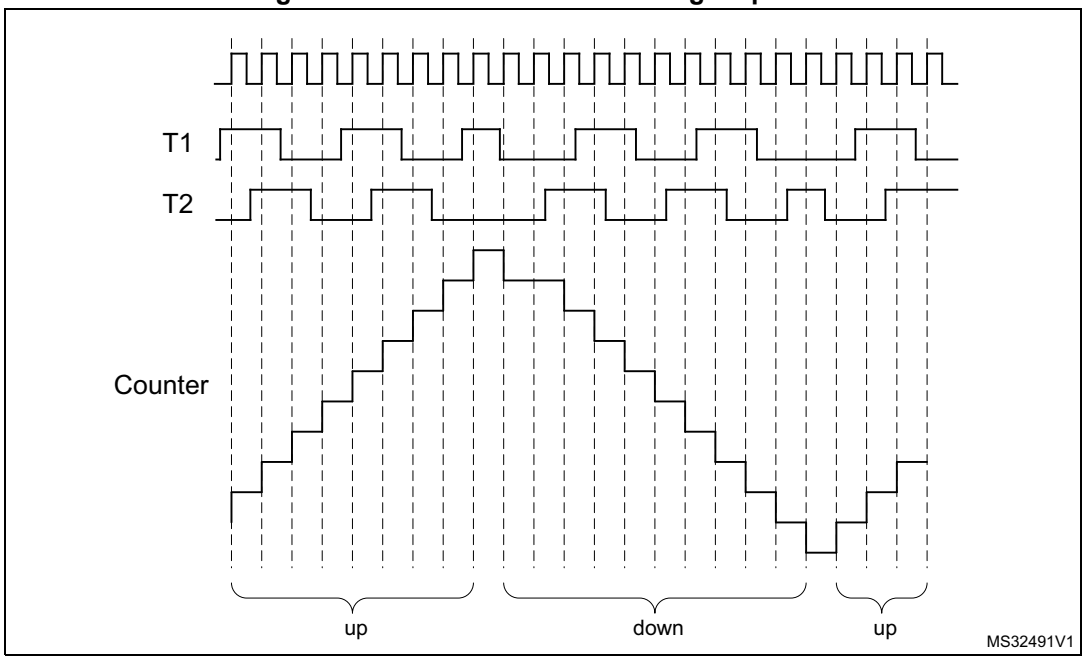

29.5 LPTIM low power modes

Table 127. Effect of low-power modes on the LPTIM

Mode	Description
Sleep	No effect. LPTIM interrupts cause the device to exit Sleep mode.
Low-power run	No effect.
Low-power sleep	No effect. LPTIM interrupts cause the device to exit the Low-power sleep mode.
Stop 0 / Stop 1	No effect when LPTIM is clocked by LSE or LSI. LPTIM interrupts cause the device to exit Stop 0 and Stop 1.
Stop 2	No effect on LPTIM1 when LPTIM1 is clocked by LSE or LSI. LPTIM1 interrupts cause the device to exit Stop 2. LPTIM2 registers content is kept but LPTIM2 must be disabled before entering Stop 2.
Standby	The LPTIM peripheral is powered down and must be reinitialized after exiting Standby or Shutdown mode.
Shutdown	

29.6 LPTIM interrupts

The following events generate an interrupt/wake-up event, if they are enabled through the LPTIM_IER register:

- Compare match
- Auto-reload match (whatever the direction if encoder mode)
- External trigger event
- Autoreload register write completed
- Compare register write completed
- Direction change (encoder mode), programmable (up / down / both).

Note: If any bit in the LPTIM_IER register (Interrupt Enable Register) is set after that its corresponding flag in the LPTIM_ISR register (Status Register) is set, the interrupt is not asserted.

29.7 LPTIM registers

29.7.1 LPTIM interrupt and status register (LPTIM_ISR)

Address offset: 0x00

Reset value: 0x0000 0000

31	30	29	28	27	26	25	24	23	22	21	20	19	18	17	16
Res.	Res.	Res.	Res.	Res.	Res.	Res.	Res.	Res.	Res.	Res.	Res.	Res.	Res.	Res.	Res.

15	14	13	12	11	10	9	8	7	6	5	4	3	2	1	0
Res.	Res.	Res.	Res.	Res.	Res.	Res.	Res.	Res.	DOWN	UP	ARROK	CMPOK	EXTTRIG	ARRM	CMPM
									r	r	r	r	r	r	r

Bits 31:7 Reserved, must be kept at reset value.

Bit 6 **DOWN**: Counter direction change up to down

In Encoder mode, DOWN bit is set by hardware to inform application that the counter direction has changed from up to down.

Bit 5 **UP**: Counter direction change down to up

In Encoder mode, UP bit is set by hardware to inform application that the counter direction has changed from down to up.

Bit 4 **ARROK**: Autoreload register update OK

ARROK is set by hardware to inform application that the APB bus write operation to the LPTIM_ARR register has been successfully completed. If so, a new one can be initiated.

Bit 3 **CMPOK**: Compare register update OK

CMPOK is set by hardware to inform application that the APB bus write operation to the LPTIM_CMP register has been successfully completed. If so, a new one can be initiated.

Bit 2 **EXTTRIG**: External trigger edge event

EXTTRIG is set by hardware to inform application that a valid edge on the selected external trigger input has occurred. If the trigger is ignored because the timer has already started, then this flag is not set.

Bit 1 **ARRM**: Autoreload match

ARRM is set by hardware to inform application that LPTIM_CNT register's value reached the LPTIM_ARR register's value.

Bit 0 **CMPM**: Compare match

The CMPM bit is set by hardware to inform application that LPTIM_CNT register value reached the LPTIM_CMP register's value.

29.7.2 LPTIM interrupt clear register (LPTIM_ICR)

Address offset: 0x04

Reset value: 0x0000 0000

31	30	29	28	27	26	25	24	23	22	21	20	19	18	17	16
Res.	Res.	Res.	Res.	Res.	Res.	Res.	Res.	Res.	Res.	Res.	Res.	Res.	Res.	Res.	Res.
15	14	13	12	11	10	9	8	7	6	5	4	3	2	1	0
Res.	Res.	Res.	Res.	Res.	Res.	Res.	Res.	Res.	DOWNCF	UPCF	ARROKCF	CMPOKCF	EXTTRIGCF	ARRMCF	CMPMCF
									w	w	w	w	w	w	w

Bits 31:7 Reserved, must be kept at reset value.

Bit 6 **DOWNCF**: Direction change to down Clear Flag
Writing 1 to this bit clear the DOWN flag in the LPT_ISR register

Bit 5 **UPCF**: Direction change to UP Clear Flag
Writing 1 to this bit clear the UP flag in the LPT_ISR register

Bit 4 **ARROKCF**: Autoreload register update OK Clear Flag
Writing 1 to this bit clears the ARROK flag in the LPT_ISR register

Bit 3 **CMPOKCF**: Compare register update OK Clear Flag
Writing 1 to this bit clears the CMPOK flag in the LPT_ISR register

Bit 2 **EXTTRIGCF**: External trigger valid edge Clear Flag
Writing 1 to this bit clears the EXTTRIG flag in the LPT_ISR register

Bit 1 **ARRMCF**: Autoreload match Clear Flag
Writing 1 to this bit clears the ARRM flag in the LPT_ISR register

Bit 0 **CMPMCF**: compare match Clear Flag
Writing 1 to this bit clears the CMP flag in the LPT_ISR register

29.7.3 LPTIM interrupt enable register (LPTIM_IER)

Address offset: 0x08

Reset value: 0x0000 0000

31	30	29	28	27	26	25	24	23	22	21	20	19	18	17	16
Res.	Res.	Res.	Res.	Res.	Res.	Res.	Res.	Res.	Res.	Res.	Res.	Res.	Res.	Res.	Res.

15	14	13	12	11	10	9	8	7	6	5	4	3	2	1	0
Res.	Res.	Res.	Res.	Res.	Res.	Res.	Res.	Res.	DOWNIE	UPIE	ARROKIE	CMPOKIE	EXTTRIGIE	ARRMIE	CMPMIE
									rw	rw	rw	rw	rw	rw	rw

Bits 31:7 Reserved, must be kept at reset value.

Bit 6 **DOWNIE**: Direction change to down Interrupt Enable
- 0: DOWN interrupt disabled
- 1: DOWN interrupt enabled

Bit 5 **UPIE**: Direction change to UP Interrupt Enable
- 0: UP interrupt disabled
- 1: UP interrupt enabled

Bit 4 **ARROKIE**: Autoreload register update OK Interrupt Enable
- 0: ARROK interrupt disabled
- 1: ARROK interrupt enabled

Bit 3 **CMPOKIE**: Compare register update OK Interrupt Enable
- 0: CMPOK interrupt disabled
- 1: CMPOK interrupt enabled

Bit 2 **EXTTRIGIE**: External trigger valid edge Interrupt Enable
- 0: EXTTRIG interrupt disabled
- 1: EXTTRIG interrupt enabled

Bit 1 **ARRMIE**: Autoreload match Interrupt Enable
- 0: ARRM interrupt disabled
- 1: ARRM interrupt enabled

Bit 0 **CMPMIE**: Compare match Interrupt Enable
- 0: CMPM interrupt disabled
- 1: CMPM interrupt enabled

Caution: The LPTIM_IER register must only be modified when the LPTIM is disabled (ENABLE bit is reset to ‘0’)

29.7.4 LPTIM configuration register (LPTIM_CFGR)

Address offset: 0x0C

Reset value: 0x0000 0000

31	30	29	28	27	26	25	24	23	22	21	20	19	18	17	16
Res.	Res.	Res.	Res.	Res.	Res.	Res.	ENC	COUNT MODE	PRELOAD	WAVPOL	WAVE	TIMOUT	TRIGEN		Res.
							rw	rw	rw	rw	rw	rw	rw	rw	

15	14	13	12	11	10	9	8	7	6	5	4	3	2	1	0
TRIGSEL			Res.	PRESC			Res.	TRGFLT		Res.	CKFLT		CKPOL		CKSEL
rw	rw	rw		rw	rw	rw		rw	rw		rw	rw	rw	rw	rw

Bits 31:25 Reserved, must be kept at reset value.

Bit 24 **ENC**: Encoder mode enable

The ENC bit controls the Encoder mode

0: Encoder mode disabled

1: Encoder mode enabled

Bit 23 **COUNTMODE**: counter mode enabled

The COUNTMODE bit selects which clock source is used by the LPTIM to clock the counter:

0: the counter is incremented following each internal clock pulse

1: the counter is incremented following each valid clock pulse on the LPTIM external Input1

Bit 22 **PRELOAD**: Registers update mode

The PRELOAD bit controls the LPTIM_ARR and the LPTIM_CMP registers update modality

0: Registers are updated after each APB bus write access

1: Registers are updated at the end of the current LPTIM period

Bit 21 **WAVPOL**: Waveform shape polarity

The WAVEPOL bit controls the output polarity

0: The LPTIM output reflects the compare results between LPTIM_ARR and LPTIM_CMP registers

1: The LPTIM output reflects the inverse of the compare results between LPTIM_ARR and LPTIM_CMP registers

Bit 20 **WAVE**: Waveform shape

The WAVE bit controls the output shape

0: Deactivate Set-once mode, PWM / One Pulse waveform (depending on OPMODE bit)

1: Activate the Set-once mode

Bit 19 **TIMOUT**: Timeout enable

The TIMOUT bit controls the Timeout feature

0: a trigger event arriving when the timer is already started will be ignored

1: A trigger event arriving when the timer is already started will reset and restart the counter

Bits18:17 **TRIGEN**: Trigger enable and polarity

The TRIGEN bits controls whether the LPTIM counter is started by an external trigger or not. If the external trigger option is selected, three configurations are possible for the trigger active edge:

00: sw trigger (counting start is initiated by software)

01: rising edge is the active edge

10: falling edge is the active edge

11: both edges are active edges

Bit 16 Reserved, must be kept at reset value.

Bits 15:13 **TRIGSEL**: Trigger selector

The TRIGSEL bits select the trigger source that will serve as a trigger event for the LPTIM among the below 8 available sources:

000: ext_trig0
001: ext_trig1
010: ext_trig2
011: ext_trig3
100: ext_trig4
101: ext_trig5
110: ext_trig6
111: ext_trig7

Bit 12 Reserved, must be kept at reset value.

Bits 11:9 **PRESC**: Clock prescaler

The PRESC bits configure the prescaler division factor. It can be one among the following division factors:

000: /1
001: /2
010: /4
011: /8
100: /16
101: /32
110: /64
111: /128

Bit 8 Reserved, must be kept at reset value.

Bits 7:6 **TRGFLT**: Configurable digital filter for trigger

The TRGFLT value sets the number of consecutive equal samples that should be detected when a level change occurs on an internal trigger before it is considered as a valid level transition. An internal clock source must be present to use this feature

00: any trigger active level change is considered as a valid trigger
01: trigger active level change must be stable for at least 2 clock periods before it is considered as valid trigger.
10: trigger active level change must be stable for at least 4 clock periods before it is considered as valid trigger.
11: trigger active level change must be stable for at least 8 clock periods before it is considered as valid trigger.

Bit 5 Reserved, must be kept at reset value.

Bits 4:3 **CKFLT**: Configurable digital filter for external clock

The CKFLT value sets the number of consecutive equal samples that should be detected when a level change occurs on an external clock signal before it is considered as a valid level transition. An internal clock source must be present to use this feature

00: any external clock signal level change is considered as a valid transition
01: external clock signal level change must be stable for at least 2 clock periods before it is considered as valid transition.
10: external clock signal level change must be stable for at least 4 clock periods before it is considered as valid transition.
11: external clock signal level change must be stable for at least 8 clock periods before it is considered as valid transition.

Bits 2:1 **CKPOL**: Clock Polarity

If LPTIM is clocked by an external clock source:

When the LPTIM is clocked by an external clock source, CKPOL bits is used to configure the active edge or edges used by the counter:

00: the rising edge is the active edge used for counting
01: the falling edge is the active edge used for counting
10: both edges are active edges. When both external clock signal's edges are considered active ones, the LPTIM must also be clocked by an internal clock source with a frequency equal to at least four time the external clock frequency.
11: not allowed

If the LPTIM is configured in Encoder mode (ENC bit is set):

00: the encoder sub-mode 1 is active
01: the encoder sub-mode 2 is active
10: the encoder sub-mode 3 is active

Refer to *Section 29.4.12: Encoder mode* for more details about Encoder mode sub-modes.

Bit 0 **CKSEL**: Clock selector

The CKSEL bit selects which clock source the LPTIM will use:

0: LPTIM is clocked by internal clock source (APB clock or any of the embedded oscillators)
1: LPTIM is clocked by an external clock source through the LPTIM external Input1

Caution: The LPTIM_CFGR register must only be modified when the LPTIM is disabled (ENABLE bit is reset to '0').

Table 128. LPTIM external trigger connection

TRIGSEL	External trigger
ext_trig0	GPIO
ext_trig1	RTC alarm A
ext_trig2	RTC alarm B
ext_trig3	RTC_TAMP1 input detection
ext_trig4	RTC_TAMP2 input detection
ext_trig5	RTC_TAMP3 input detection
ext_trig6	COMP1_OUT
ext_trig7	COMP2_OUT

29.7.5 LPTIM control register (LPTIM_CR)

Address offset: 0x10

Reset value: 0x0000 0000

31	30	29	28	27	26	25	24	23	22	21	20	19	18	17	16
Res.	Res.	Res.	Res.	Res.	Res.	Res.	Res.	Res.	Res.	Res.	Res.	Res.	Res.	Res.	Res.

15	14	13	12	11	10	9	8	7	6	5	4	3	2	1	0
Res.	Res.	Res.	Res.	Res.	Res.	Res.	Res.	Res.	Res.	Res.	Res.	Res.	CNT STRT	SNG STRT	ENA BLE
													rw	rw	rw

Bits 31:3 Reserved, must be kept at reset value.

Bit 2 **CNTSTRT**: Timer start in Continuous mode

This bit is set by software and cleared by hardware.

In case of software start (TRIGEN[1:0] = ‘00’), setting this bit starts the LPTIM in Continuous mode.

If the software start is disabled (TRIGEN[1:0] different than ‘00’), setting this bit starts the timer in Continuous mode as soon as an external trigger is detected.

If this bit is set when a single pulse mode counting is ongoing, then the timer will not stop at the next match between the LPTIM_ARR and LPTIM_CNT registers and the LPTIM counter keeps counting in Continuous mode.

This bit can be set only when the LPTIM is enabled. It will be automatically reset by hardware.

Bit 1 **SNGSTRT**: LPTIM start in Single mode

This bit is set by software and cleared by hardware.

In case of software start (TRIGEN[1:0] = ‘00’), setting this bit starts the LPTIM in single pulse mode.

If the software start is disabled (TRIGEN[1:0] different than ‘00’), setting this bit starts the LPTIM in single pulse mode as soon as an external trigger is detected.

If this bit is set when the LPTIM is in continuous counting mode, then the LPTIM will stop at the following match between LPTIM_ARR and LPTIM_CNT registers.

This bit can only be set when the LPTIM is enabled. It will be automatically reset by hardware.

Bit 0 **ENABLE**: LPTIM enable

The ENABLE bit is set and cleared by software.

0:LPTIM is disabled

1:LPTIM is enabled

29.7.6 LPTIM compare register (LPTIM_CMP)

Address offset: 0x14

Reset value: 0x0000 0000

31	30	29	28	27	26	25	24	23	22	21	20	19	18	17	16
Res.	Res.	Res.	Res.	Res.	Res.	Res.	Res.	Res.	Res.	Res.	Res.	Res.	Res.	Res.	Res.
15	14	13	12	11	10	9	8	7	6	5	4	3	2	1	0
CMP[15:0]															
rw															

Bits 31:16 Reserved, must be kept at reset value.

Bits 15:0 **CMP**: Compare value

CMP is the compare value used by the LPTIM.

The LPTIM_CMP register's content must only be modified when the LPTIM is enabled (ENABLE bit is set to '1').

29.7.7 LPTIM autoreload register (LPTIM_ARR)

Address offset: 0x18

Reset value: 0x0000 0001

31	30	29	28	27	26	25	24	23	22	21	20	19	18	17	16
Res.	Res.	Res.	Res.	Res.	Res.	Res.	Res.	Res.	Res.	Res.	Res.	Res.	Res.	Res.	Res.
15	14	13	12	11	10	9	8	7	6	5	4	3	2	1	0
ARR[15:0]															
rw															

Bits 31:16 Reserved, must be kept at reset value.

Bits 15:0 **ARR**: Auto reload value

ARR is the autoreload value for the LPTIM.

This value must be strictly greater than the CMP[15:0] value.

The LPTIM_ARR register's content must only be modified when the LPTIM is enabled (ENABLE bit is set to '1').

29.7.8 LPTIM counter register (LPTIM_CNT)

Address offset: 0x1C

Reset value: 0x0000 0000

31	30	29	28	27	26	25	24	23	22	21	20	19	18	17	16
Res.	Res.	Res.	Res.	Res.	Res.	Res.	Res.	Res.	Res.	Res.	Res.	Res.	Res.	Res.	Res.

15	14	13	12	11	10	9	8	7	6	5	4	3	2	1	0
CNT[15:0]															
r															

Bits 31:16 Reserved, must be kept at reset value.

Bits 15:0 **CNT**: Counter value

When the LPTIM is running with an asynchronous clock, reading the LPTIM_CNT register may return unreliable values. So in this case it is necessary to perform two consecutive read accesses and verify that the two returned values are identical.

It should be noted that for a reliable LPTIM_CNT register read access, two consecutive read accesses must be performed and compared. A read access can be considered reliable when the values of the two consecutive read accesses are equal.

29.7.9 LPTIM1 option register (LPTIM1_OR)

Address offset: 0x20

Reset value: 0x0000 0000

31	30	29	28	27	26	25	24	23	22	21	20	19	18	17	16
Res.	Res.	Res.	Res.	Res.	Res.	Res.	Res.	Res.	Res.	Res.	Res.	Res.	Res.	Res.	Res.

15	14	13	12	11	10	9	8	7	6	5	4	3	2	1	0
Res.	Res.	Res.	Res.	Res.	Res.	Res.	Res.	Res.	Res.	Res.	Res.	Res.	Res.	OR_1	OR_0
														rw	rw

Bits 31:2 Reserved, must be kept at reset value.

Bit 1 **OR_1**: Option register bit 1

0: LPTIM1 input 2 is connected to I/O

1: LPTIM1 input 2 is connected to COMP2_OUT

Bit 0 **OR_0**: Option register bit 0

0: LPTIM1 input 1 is connected to I/O

1: LPTIM1 input 1 is connected to COMP1_OUT

29.7.10 LPTIM2 option register (LPTIM2_OR)

Address offset: 0x20

Reset value: 0x0000 0000

31	30	29	28	27	26	25	24	23	22	21	20	19	18	17	16
Res.	Res.	Res.	Res.	Res.	Res.	Res.	Res.	Res.	Res.	Res.	Res.	Res.	Res.	Res.	Res.

15	14	13	12	11	10	9	8	7	6	5	4	3	2	1	0
Res.	Res.	Res.	Res.	Res.	Res.	Res.	Res.	Res.	Res.	Res.	Res.	Res.	Res.	OR_1	OR_0
														rw	rw

Bits 31:2 Reserved, must be kept at reset value.

Bit 1 **OR_1**: Option register bit 1
- 0: LPTIM2 input 1 is connected to I/O
- 1: LPTIM2 input 1 is connected to COMP2_OUT

Bit 0 **OR_0**: Option register bit 0
- 0: LPTIM2 input 1 is connected to I/O
- 1: LPTIM2 input 1 is connected to COMP1_OUT

Note: When both OR_1 and OR_0 are set, LPTIM2 input 1 is connected to (COMP1_OUT OR COMP2_OUT).

29.7.11 LPTIM register map

The following table summarizes the LPTIM registers.

Table 129. LPTIM register map and reset values

Offset	Register	31	30	29	28	27	26	25	24	23	22	21	20	19	18	17	16	15	14	13	12	11	10	9	8	7	6	5	4	3	2	1	0
0x00	LPTIM_ISR	Res.	Res.	Res.	Res.	Res.	Res.	Res.	Res.	Res.	Res.	Res.	Res.	Res.	Res.	Res.	Res.	Res.	Res.	Res.	Res.	Res.	Res.	Res.	Res.	Res.	DOWN	UP	ARROK	CMPOK	EXTTRIG	ARRM	CMPM
	Reset value																										0	0	0	0	0	0	0
0x04	LPTIM_ICR	Res.	Res.	Res.	Res.	Res.	Res.	Res.	Res.	Res.	Res.	Res.	Res.	Res.	Res.	Res.	Res.	Res.	Res.	Res.	Res.	Res.	Res.	Res.	Res.	Res.	DOWNCF	UPCF	ARROKCF	CMPOKCF	EXTTRIGCF	ARRMCF	CMPMCF
	Reset value																										0	0	0	0	0	0	0
0x08	LPTIM_IER	Res.	Res.	Res.	Res.	Res.	Res.	Res.	Res.	Res.	Res.	Res.	Res.	Res.	Res.	Res.	Res.	Res.	Res.	Res.	Res.	Res.	Res.	Res.	Res.	Res.	DOWNIE	UPIE	ARROKIE	CMPOKIE	EXTTRIGIE	ARRMIE	CMPMIE
	Reset value																										0	0	0	0	0	0	0
0x0C	LPTIM_CFGR	Res.	Res.	Res.	Res.	Res.	Res.	Res.	ENC	COUNTMODE	PRELOAD	WAVPOL	WAVE	TIMOUT	TRIGEN		Res.	TRIGSEL			Res.	PRESC			Res.	TRGFLT		Res.	CKFLT		CKPOL		CKSEL
	Reset value								0	0	0	0	0	0	0	0		0	0	0		0	0	0		0	0	0	0	0	0	0	0
0x10	LPTIM_CR	Res.	Res.	Res.	Res.	Res.	Res.	Res.	Res.	Res.	Res.	Res.	Res.	Res.	Res.	Res.	Res.	Res.	Res.	Res.	Res.	Res.	Res.	Res.	Res.	Res.	Res.	Res.	Res.	Res.	CNTSTRT	SNGSTRT	ENABLE
	Reset value																														0	0	0
0x14	LPTIM_CMP	Res.	Res.	Res.	Res.	Res.	Res.	Res.	Res.	Res.	Res.	Res.	Res.	Res.	Res.	Res.	Res.	CMP[15:0]															
	Reset value																	0	0	0	0	0	0	0	0	0	0	0	0	0	0	0	0
0x18	LPTIM_ARR	Res.	Res.	Res.	Res.	Res.	Res.	Res.	Res.	Res.	Res.	Res.	Res.	Res.	Res.	Res.	Res.	ARR[15:0]															
	Reset value																	0	0	0	0	0	0	0	0	0	0	0	0	0	0	0	1
0x1C	LPTIM_CNT	Res.	Res.	Res.	Res.	Res.	Res.	Res.	Res.	Res.	Res.	Res.	Res.	Res.	Res.	Res.	Res.	CNT[15:0]															
	Reset value																	0	0	0	0	0	0	0	0	0	0	0	0	0	0	0	0
0x20	LPTIM_OR	Res.	Res.	Res.	Res.	Res.	Res.	Res.	Res.	Res.	Res.	Res.	Res.	Res.	Res.	Res.	Res.	Res.	Res.	Res.	Res.	Res.	Res.	Res.	Res.	Res.	Res.	Res.	Res.	Res.	Res.	OR_1	OR_0
	Reset Value																															0	0

Refer to *Section 2.2.2 on page 62* for the register boundary addresses.

30 Infrared interface (IRTIM)

An infrared interface (IRTIM) for remote control is available on the device. It can be used with an infrared LED to perform remote control functions.

It uses internal connections with TIM15 and TIM16 as shown in *Figure 321*.

To generate the infrared remote control signals, the IR interface must be enabled and TIM15 channel 1 (TIM15_OC1) and TIM16 channel 1 (TIM16_OC1) must be properly configured to generate correct waveforms.

The infrared receiver can be implemented easily through a basic input capture mode.

Figure 321. IR internal hardware connections with TIM15 and TIM16

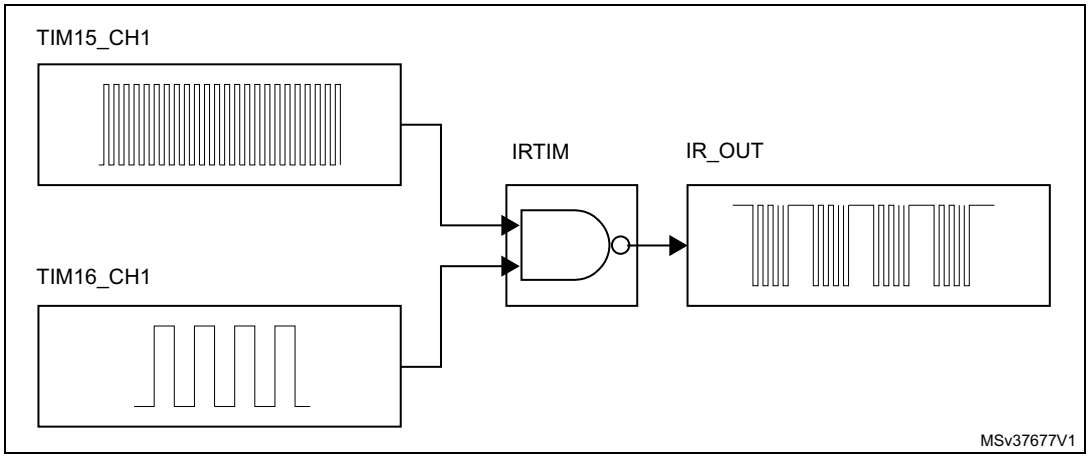

All standard IR pulse modulation modes can be obtained by programming the two timer output compare channels.

TIM15 is used to generate the high frequency carrier signal, while TIM16 generates the modulation envelope.

The infrared function is output on the IR_OUT pin. The activation of this function is done through the GPIOx_AFRx register by enabling the related alternate function bit.

The high sink LED driver capability (only available on the PB9 pin) can be activated through the I2C_PB9_FMP bit in the SYSCFG_CFGR1 register and used to sink the high current needed to directly control an infrared LED.

31 Independent watchdog (IWDG)

31.1 Introduction

The devices feature an embedded watchdog peripheral which offers a combination of high safety level, timing accuracy and flexibility of use. The Independent watchdog peripheral serves to detect and resolve malfunctions due to software failure, and to trigger system reset when the counter reaches a given timeout value.

The independent watchdog (IWDG) is clocked by its own dedicated low-speed clock (LSI) and thus stays active even if the main clock fails.

The IWDG is best suited to applications which require the watchdog to run as a totally independent process outside the main application, but have lower timing accuracy constraints. For further information on the window watchdog, refer to *Section 32 on page 911*.

31.2 IWDG main features

- Free-running downcounter
- Clocked from an independent RC oscillator (can operate in Standby and Stop modes)
- Conditional Reset
  - Reset (if watchdog activated) when the downcounter value becomes less than 0x000
  - Reset (if watchdog activated) if the downcounter is reloaded outside the window

31.3 IWDG functional description

31.3.1 IWDG block diagram

Figure 322 shows the functional blocks of the independent watchdog module.

Figure 322. Independent watchdog block diagram

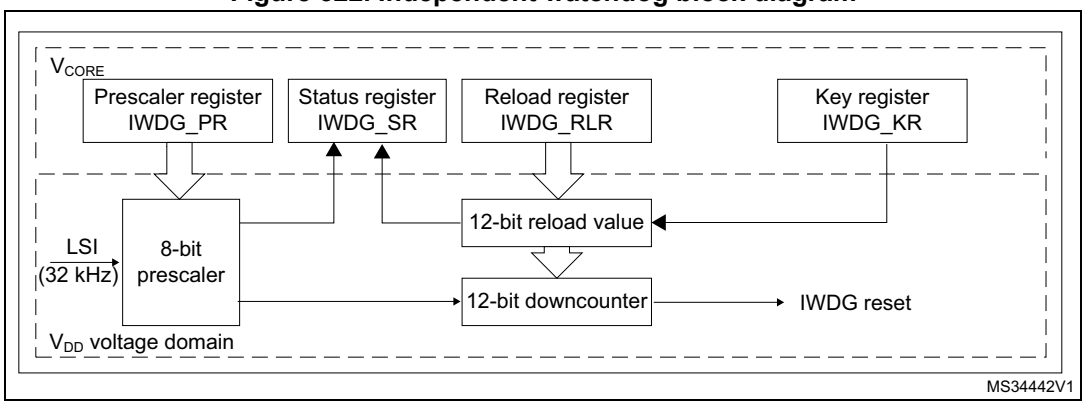

Note: The watchdog function is implemented in the V_{CORE} voltage domain that is still functional in Stop and Standby modes.

When the independent watchdog is started by writing the value 0x0000 CCCC in the Key register (IWDG_KR), the counter starts counting down from the reset value of 0xFFF. When it reaches the end of count value (0x000) a reset signal is generated (IWDG reset).

Whenever the key value 0x0000 AAAA is written in the IWDG_KR register, the IWDG_RLR value is reloaded in the counter and the watchdog reset is prevented.

31.3.2 Window option

The IWDG can also work as a window watchdog by setting the appropriate window in the IWDG_WINR register.

If the reload operation is performed while the counter is greater than the value stored in the window register (IWDG_WINR), then a reset is provided.

The default value of the IWDG_WINR is 0x0000 0FFF, so if it is not updated, the window option is disabled.

As soon as the window value is changed, a reload operation is performed in order to reset the downcounter to the IWDG_RLR value and ease the cycle number calculation to generate the next reload.

Configuring the IWDG when the window option is enabled

1. Enable the IWDG by writing 0x0000 CCCC in the IWDG_KR register.
2. Enable register access by writing 0x0000 5555 in the IWDG_KR register.
3. Write the IWDG prescaler by programming IWDG_PR from 0 to 7.
4. Write the reload register (IWDG_RLR).
5. Wait for the registers to be updated (IWDG_SR = 0x0000 0000).
6. Write to the window register IWDG_WINR. This automatically refreshes the counter value IWDG_RLR.

Note: Writing the window value allows to refresh the Counter value by the RLR when IWDG_SR is set to 0x0000 0000.

Configuring the IWDG when the window option is disabled

When the window option it is not used, the IWDG can be configured as follows:

1. Enable the IWDG by writing 0x0000 CCCC in the IWDG_KR register.
2. Enable register access by writing 0x0000 5555 in the IWDG_KR register.
3. Write the IWDG prescaler by programming IWDG_PR from 0 to 7.
4. Write the reload register (IWDG_RLR).
5. Wait for the registers to be updated (IWDG_SR = 0x0000 0000).
6. Refresh the counter value with IWDG_RLR (IWDG_KR = 0x0000 AAAA)

31.3.3 Hardware watchdog

If the “Hardware watchdog” feature is enabled through the device option bits, the watchdog is automatically enabled at power-on, and generates a reset unless the Key register is written by the software before the counter reaches end of count or if the downcounter is reloaded inside the window.

31.3.4 Low-power freeze

Depending on the IWDG_STOP and IWDG_STBY options configuration, the IWDG can continue counting or not during the Stop mode and the Standby mode respectively. If the IWDG is kept running during Stop or Standby modes, it can wake up the device from this mode. Refer to *Section : User and read protection option bytes* for more details.

31.3.5 Behavior in Stop and Standby modes

Once running, the IWDG cannot be stopped.

31.3.6 Register access protection

Write access to the IWDG_PR, IWDG_RLR and IWDG_WINR registers is protected. To modify them, you must first write the code 0x0000 5555 in the IWDG_KR register. A write access to this register with a different value will break the sequence and register access will be protected again. This implies that it is the case of the reload operation (writing 0x0000 AAAA).
A status register is available to indicate that an update of the prescaler or the down-counter reload value or the window value is on going.

31.3.7 Debug mode

When the microcontroller enters debug mode (core halted), the IWDG counter either continues to work normally or stops, depending on DBG_IWDG_STOP configuration bit in DBG module.

31.4 IWDG registers

Refer to *Section 1.1 on page 55* for a list of abbreviations used in register descriptions.

The peripheral registers can be accessed by half-words (16-bit) or words (32-bit).

31.4.1 Key register (IWDG_KR)

Address offset: 0x00

Reset value: 0x0000 0000 (reset by Standby mode)

31	30	29	28	27	26	25	24	23	22	21	20	19	18	17	16
Res.	Res.	Res.	Res.	Res.	Res.	Res.	Res.	Res.	Res.	Res.	Res.	Res.	Res.	Res.	Res.
15	14	13	12	11	10	9	8	7	6	5	4	3	2	1	0
KEY[15:0]															
w	w	w	w	w	w	w	w	w	w	w	w	w	w	w	w

Bits 31:16 Reserved, must be kept at reset value.

Bits 15:0 **KEY[15:0]:** Key value (write only, read 0x0000)

These bits must be written by software at regular intervals with the key value 0xAAAA, otherwise the watchdog generates a reset when the counter reaches 0.

Writing the key value 0x5555 to enable access to the IWDG_PR, IWDG_RLR and IWDG_WINR registers (see *Section 31.3.6: Register access protection*)

Writing the key value CCCCh starts the watchdog (except if the hardware watchdog option is selected)

31.4.2 Prescaler register (IWDG_PR)

Address offset: 0x04

Reset value: 0x0000 0000

31	30	29	28	27	26	25	24	23	22	21	20	19	18	17	16
Res.	Res.	Res.	Res.	Res.	Res.	Res.	Res.	Res.	Res.	Res.	Res.	Res.	Res.	Res.	Res.

15	14	13	12	11	10	9	8	7	6	5	4	3	2	1	0
Res.	Res.	Res.	Res.	Res.	Res.	Res.	Res.	Res.	Res.	Res.	Res.	Res.	PR[2:0]		
													rw	rw	rw

Bits 31:3 Reserved, must be kept at reset value.

Bits 2:0 **PR[2:0]:** Prescaler divider

These bits are write access protected see *Section 31.3.6: Register access protection*. They are written by software to select the prescaler divider feeding the counter clock. PVU bit of IWDG_SR must be reset in order to be able to change the prescaler divider.

000: divider /4
001: divider /8
010: divider /16
011: divider /32
100: divider /64
101: divider /128
110: divider /256
111: divider /256

Note: Reading this register returns the prescaler value from the VDD voltage domain. This value may not be up to date/valid if a write operation to this register is ongoing. For this reason the value read from this register is valid only when the PVU bit in the IWDG_SR register is reset.

31.4.3 Reload register (IWDG_RLR)

Address offset: 0x08

Reset value: 0x0000 0FFF (reset by Standby mode)

31	30	29	28	27	26	25	24	23	22	21	20	19	18	17	16
Res.	Res.	Res.	Res.	Res.	Res.	Res.	Res.	Res.	Res.	Res.	Res.	Res.	Res.	Res.	Res.

15	14	13	12	11	10	9	8	7	6	5	4	3	2	1	0
Res.	Res.	Res.	Res.	RL[11:0]											
				rw	rw	rw	rw	rw	rw	rw	rw	rw	rw	rw	rw

Bits 31:12 Reserved, must be kept at reset value.

Bits11:0 **RL[11:0]:** Watchdog counter reload value

These bits are write access protected see *Section 31.3.6*. They are written by software to define the value to be loaded in the watchdog counter each time the value 0xAAAA is written in the IWDG_KR register. The watchdog counter counts down from this value. The timeout period is a function of this value and the clock prescaler. Refer to the datasheet for the timeout information.

The RVU bit in the IWDG_SR register must be reset in order to be able to change the reload value.

Note: Reading this register returns the reload value from the VDD voltage domain. This value may not be up to date/valid if a write operation to this register is ongoing on this register. For this reason the value read from this register is valid only when the RVU bit in the IWDG_SR register is reset.

31.4.4 Status register (IWDG_SR)

Address offset: 0x0C

Reset value: 0x0000 0000 (not reset by Standby mode)

31	30	29	28	27	26	25	24	23	22	21	20	19	18	17	16
Res.	Res.	Res.	Res.	Res.	Res.	Res.	Res.	Res.	Res.	Res.	Res.	Res.	Res.	Res.	Res.

15	14	13	12	11	10	9	8	7	6	5	4	3	2	1	0
Res.	Res.	Res.	Res.	Res.	Res.	Res.	Res.	Res.	Res.	Res.	Res.	Res.	WVU	RVU	PVU
													r	r	r

Bits 31:3 Reserved, must be kept at reset value.

Bit 2 **WVU:** Watchdog counter window value update

This bit is set by hardware to indicate that an update of the window value is ongoing. It is reset by hardware when the reload value update operation is completed in the V_{DD} voltage domain (takes up to 5 RC 40 kHz cycles).

Window value can be updated only when WVU bit is reset.

This bit is generated only if generic “window” = 1

Bit 1 **RVU:** Watchdog counter reload value update

This bit is set by hardware to indicate that an update of the reload value is ongoing. It is reset by hardware when the reload value update operation is completed in the V_{DD} voltage domain (takes up to 5 RC 40 kHz cycles).

Reload value can be updated only when RVU bit is reset.

Bit 0 **PVU:** Watchdog prescaler value update

This bit is set by hardware to indicate that an update of the prescaler value is ongoing. It is reset by hardware when the prescaler update operation is completed in the V_{DD} voltage domain (takes up to 5 RC 40 kHz cycles).

Prescaler value can be updated only when PVU bit is reset.

Note: If several reload, prescaler, or window values are used by the application, it is mandatory to wait until RVU bit is reset before changing the reload value, to wait until PVU bit is reset before changing the prescaler value, and to wait until WVU bit is reset before changing the window value. However, after updating the prescaler and/or the reload/window value it is not necessary to wait until RVU or PVU or WVU is reset before continuing code execution except in case of low-power mode entry.

31.4.5 Window register (IWDG_WINR)

Address offset: 0x10

Reset value: 0x0000 0FFF (reset by Standby mode)

31	30	29	28	27	26	25	24	23	22	21	20	19	18	17	16
Res.	Res.	Res.	Res.	Res.	Res.	Res.	Res.	Res.	Res.	Res.	Res.	Res.	Res.	Res.	Res.

15	14	13	12	11	10	9	8	7	6	5	4	3	2	1	0
Res.	Res.	Res.	Res.	WIN[11:0]											
				rw	rw	rw	rw	rw	rw	rw	rw	rw	rw	rw	rw

Bits 31:12 Reserved, must be kept at reset value.

Bits11:0 **WIN[11:0]:** Watchdog counter window value

These bits are write access protected see *Section 31.3.6*. These bits contain the high limit of the window value to be compared to the downcounter.

To prevent a reset, the downcounter must be reloaded when its value is lower than the window register value and greater than 0x0

The WVU bit in the IWDG_SR register must be reset in order to be able to change the reload value.

Note: Reading this register returns the reload value from the V_{DD} voltage domain. This value may not be valid if a write operation to this register is ongoing. For this reason the value read from this register is valid only when the WVU bit in the IWDG_SR register is reset.

31.4.6 IWDG register map

The following table gives the IWDG register map and reset values.

Table 130. IWDG register map and reset values

Offset	Register	31	30	29	28	27	26	25	24	23	22	21	20	19	18	17	16	15	14	13	12	11	10	9	8	7	6	5	4	3	2	1	0
0x00	**IWDG_KR**	Res.	Res.	Res.	Res.	Res.	Res.	Res.	Res.	Res.	Res.	Res.	Res.	Res.	Res.	Res.	Res.	KEY[15:0]															
	Reset value																	0	0	0	0	0	0	0	0	0	0	0	0	0	0	0	0
0x04	**IWDG_PR**	Res.	Res.	Res.	Res.	Res.	Res.	Res.	Res.	Res.	Res.	Res.	Res.	Res.	Res.	Res.	Res.	Res.	Res.	Res.	Res.	Res.	Res.	Res.	Res.	Res.	Res.	Res.	Res.	Res.	PR[2:0]		
	Reset value																														0	0	0
0x08	**IWDG_ RLR**	Res.	Res.	Res.	Res.	Res.	Res.	Res.	Res.	Res.	Res.	Res.	Res.	Res.	Res.	Res.	Res.	Res.	Res.	Res.	Res.	RL[11:0]											
	Reset value																					1	1	1	1	1	1	1	1	1	1	1	1
0x0C	**IWDG_SR**	Res.	Res.	Res.	Res.	Res.	Res.	Res.	Res.	Res.	Res.	Res.	Res.	Res.	Res.	Res.	Res.	Res.	Res.	Res.	Res.	Res.	Res.	Res.	Res.	Res.	Res.	Res.	Res.	Res.	WVU	RVU	PVU
	Reset value																														0	0	0
0x10	**IWDG_ WINR**	Res.	Res.	Res.	Res.	Res.	Res.	Res.	Res.	Res.	Res.	Res.	Res.	Res.	Res.	Res.	Res.	Res.	Res.	Res.	Res.	WIN[11:0]											
	Reset value																					1	1	1	1	1	1	1	1	1	1	1	1

Refer to *Section 2.2.2: Memory map and register boundary addresses* for the register boundary addresses.

32 System window watchdog (WWDG)

32.1 Introduction

The system window watchdog (WWDG) is used to detect the occurrence of a software fault, usually generated by external interference or by unforeseen logical conditions, which causes the application program to abandon its normal sequence. The watchdog circuit generates an MCU reset on expiry of a programmed time period, unless the program refreshes the contents of the downcounter before the T6 bit becomes cleared. An MCU reset is also generated if the 7-bit downcounter value (in the control register) is refreshed before the downcounter has reached the window register value. This implies that the counter must be refreshed in a limited window.

The WWDG clock is prescaled from the APB clock and has a configurable time-window that can be programmed to detect abnormally late or early application behavior.

The WWDG is best suited for applications which require the watchdog to react within an accurate timing window.

32.2 WWDG main features

- Programmable free-running downcounter
- Conditional reset
  - Reset (if watchdog activated) when the downcounter value becomes less than 0x40
  - Reset (if watchdog activated) if the downcounter is reloaded outside the window (see *Figure 324*)
- Early wakeup interrupt (EWI): triggered (if enabled and the watchdog activated) when the downcounter is equal to 0x40.

32.3 WWDG functional description

If the watchdog is activated (the WDGA bit is set in the WWDG_CR register) and when the 7-bit downcounter (T[6:0] bits) is decremented from 0x40 to 0x3F (T6 becomes cleared), it initiates a reset. If the software reloads the counter while the counter is greater than the value stored in the window register, then a reset is generated.

Figure 323. Watchdog block diagram

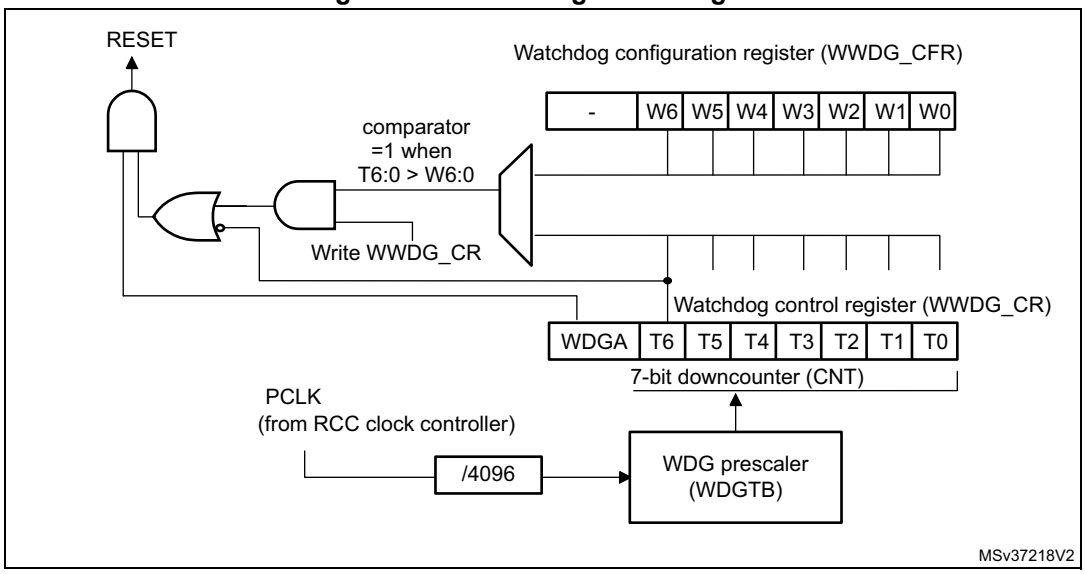

The application program must write in the WWDG_CR register at regular intervals during normal operation to prevent an MCU reset. This operation must occur only when the counter value is lower than the window register value and higher than 0x3F. The value to be stored in the WWDG_CR register must be between 0xFF and 0xC0.

32.3.1 Enabling the watchdog

The watchdog is always disabled after a reset. It is enabled by setting the WDGA bit in the WWDG_CR register, then it cannot be disabled again except by a reset.

32.3.2 Controlling the downcounter

This downcounter is free-running, counting down even if the watchdog is disabled. When the watchdog is enabled, the T6 bit must be set to prevent generating an immediate reset.

The T[5:0] bits contain the number of increments which represents the time delay before the watchdog produces a reset. The timing varies between a minimum and a maximum value due to the unknown status of the prescaler when writing to the WWDG_CR register (see *Figure 324*). The Configuration register (WWDG_CFR) contains the high limit of the window: To prevent a reset, the downcounter must be reloaded when its value is lower than the window register value and greater than 0x3F. *Figure 324* describes the window watchdog process.

Note: The T6 bit can be used to generate a software reset (the WDGA bit is set and the T6 bit is cleared).

32.3.3 Advanced watchdog interrupt feature

The Early Wakeup Interrupt (EWI) can be used if specific safety operations or data logging must be performed before the actual reset is generated. The EWI interrupt is enabled by setting the EWI bit in the WWDG_CFR register. When the downcounter reaches the value 0x40, an EWI interrupt is generated and the corresponding interrupt service routine (ISR) can be used to trigger specific actions (such as communications or data logging), before resetting the device.

In some applications, the EWI interrupt can be used to manage a software system check and/or system recovery/graceful degradation, without generating a WWDG reset. In this case, the corresponding interrupt service routine (ISR) should reload the WWDG counter to avoid the WWDG reset, then trigger the required actions.

The EWI interrupt is cleared by writing '0' to the EWIF bit in the WWDG_SR register.

Note: When the EWI interrupt cannot be served, e.g. due to a system lock in a higher priority task, the WWDG reset will eventually be generated.

32.3.4 How to program the watchdog timeout

You can use the formula in *Figure 324* to calculate the WWDG timeout.

Warning: When writing to the WWDG_CR register, always write 1 in the T6 bit to avoid generating an immediate reset.

Figure 324. Window watchdog timing diagram

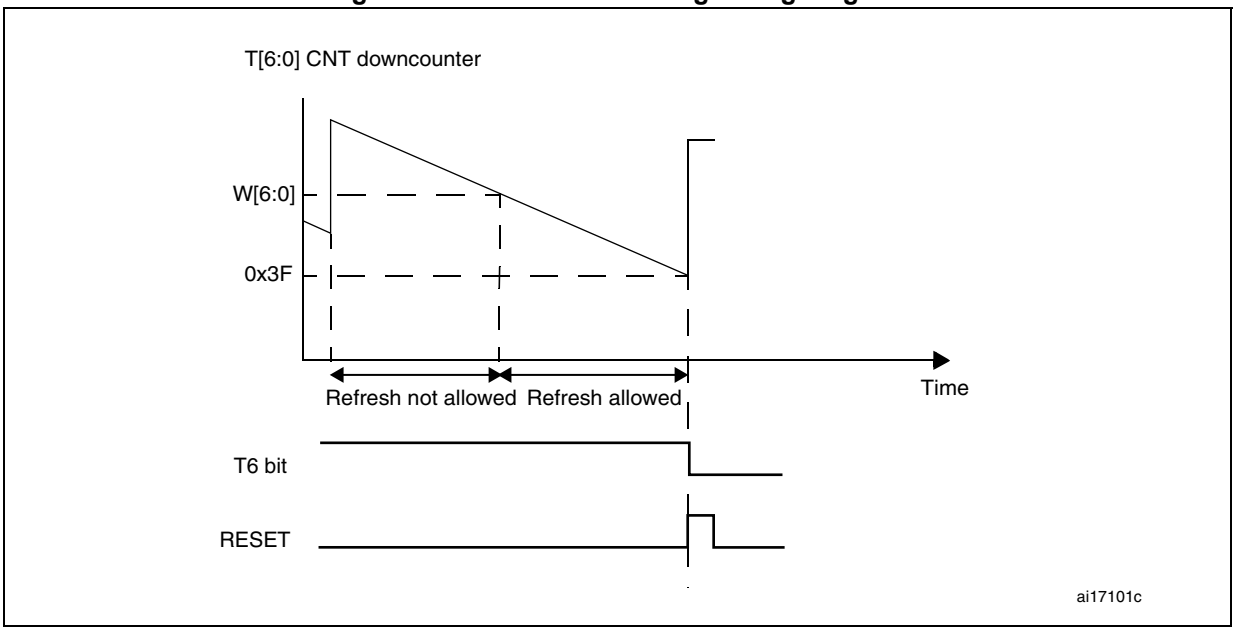

The formula to calculate the timeout value is given by:

$$t_{WWDG} = t_{PCLK} \times 4096 \times 2^{WDGTB[1:0]} \times (T[5:0] + 1) \qquad (ms)$$

where:

t_{WWDG}: WWDG timeout

t_{PCLK}: APB clock period measured in ms

4096: value corresponding to internal divider

As an example, lets assume APB frequency is equal to 48 MHz, WDGTB[1:0] is set to 3 and T[5:0] is set to 63:

$$t_{WWDG} = 1 / 48000 \times 4096 \times 2^{3} \times (63 + 1) = 43.69 \text{ ms}$$

Refer to the datasheet for the minimum and maximum values of the t_{WWDG}.

32.3.5 Debug mode

When the microcontroller enters debug mode (Cortex®-M4 core halted), the WWDG counter either continues to work normally or stops, depending on DBG_WWDG_STOP configuration bit in DBG module. For more details, refer to *Section 43.16.2: Debug support for timers, RTC, watchdog, bxCAN and I2C*.

32.4 WWDG registers

Refer to *Section 1.1 on page 55* for a list of abbreviations used in register descriptions.

The peripheral registers can be accessed by half-words (16-bit) or words (32-bit).

32.4.1 Control register (WWDG_CR)

Address offset: 0x00

Reset value: 0x0000 007F

31	30	29	28	27	26	25	24	23	22	21	20	19	18	17	16
Res.	Res.	Res.	Res.	Res.	Res.	Res.	Res.	Res.	Res.	Res.	Res.	Res.	Res.	Res.	Res.

15	14	13	12	11	10	9	8	7	6	5	4	3	2	1	0
Res.	Res.	Res.	Res.	Res.	Res.	Res.	Res.	WDGA	T[6:0]						
								rs	rw						

Bits 31:8 Reserved, must be kept at reset value.

Bit 7 **WDGA:** Activation bit

This bit is set by software and only cleared by hardware after a reset. When WDGA = 1, the watchdog can generate a reset.

0: Watchdog disabled
1: Watchdog enabled

Bits 6:0 **T[6:0]:** 7-bit counter (MSB to LSB)

These bits contain the value of the watchdog counter. It is decremented every (4096 x $2^{WDGTB[1:0]}$) PCLK cycles. A reset is produced when it is decremented from 0x40 to 0x3F (T6 becomes cleared).

32.4.2 Configuration register (WWDG_CFR)

Address offset: 0x04

Reset value: 0x0000 007F

31	30	29	28	27	26	25	24	23	22	21	20	19	18	17	16
Res.	Res.	Res.	Res.	Res.	Res.	Res.	Res.	Res.	Res.	Res.	Res.	Res.	Res.	Res.	Res.

15	14	13	12	11	10	9	8	7	6	5	4	3	2	1	0
Res.	Res.	Res.	Res.	Res.	Res.	EWI	WDGTB[1:0]		W[6:0]						
						rs	rw	rw	rw	rw	rw	rw	rw	rw	rw

Bits 31:10 Reserved, must be kept at reset value.

Bit 9 **EWI:** Early wakeup interrupt

When set, an interrupt occurs whenever the counter reaches the value 0x40. This interrupt is only cleared by hardware after a reset.

Bits 8:7 **WDGTB[1:0]:** Timer base

The time base of the prescaler can be modified as follows:

00: CK Counter Clock (PCLK div 4096) div 1
01: CK Counter Clock (PCLK div 4096) div 2
10: CK Counter Clock (PCLK div 4096) div 4
11: CK Counter Clock (PCLK div 4096) div 8

Bits 6:0 **W[6:0]:** 7-bit window value

These bits contain the window value to be compared to the downcounter.

32.4.3 Status register (WWDG_SR)

Address offset: 0x08

Reset value: 0x0000 0000

31	30	29	28	27	26	25	24	23	22	21	20	19	18	17	16
Res.	Res.	Res.	Res.	Res.	Res.	Res.	Res.	Res.	Res.	Res.	Res.	Res.	Res.	Res.	Res.

15	14	13	12	11	10	9	8	7	6	5	4	3	2	1	0
Res.	Res.	Res.	Res.	Res.	Res.	Res.	Res.	Res.	Res.	Res.	Res.	Res.	Res.	Res.	EWIF
															rc_w0

Bits 31:1 Reserved, must be kept at reset value.

Bit 0 **EWIF:** Early wakeup interrupt flag

This bit is set by hardware when the counter has reached the value 0x40. It must be cleared by software by writing ‘0’. A write of ‘1’ has no effect. This bit is also set if the interrupt is not enabled.

32.4.4 WWDG register map

The following table gives the WWDG register map and reset values.

Table 131. WWDG register map and reset values

Offset	Register	31	30	29	28	27	26	25	24	23	22	21	20	19	18	17	16	15	14	13	12	11	10	9	8	7	6	5	4	3	2	1	0
0x00	**WWDG_ CR**	Res.	Res.	Res.	Res.	Res.	Res.	Res.	Res.	Res.	Res.	Res.	Res.	Res.	Res.	Res.	Res.	Res.	Res.	Res.	Res.	Res.	Res.	Res.	Res.	WDGA	T[6:0]						
	Reset value																									0	1	1	1	1	1	1	1
0x04	**WWDG_ CFR**	Res.	Res.	Res.	Res.	Res.	Res.	Res.	Res.	Res.	Res.	Res.	Res.	Res.	Res.	Res.	Res.	Res.	Res.	Res.	Res.	Res.	Res.	EWI	WDGTB1	WDGTB0	W[6:0]						
	Reset value																							0	0	0	1	1	1	1	1	1	1
0x08	**WWDG_ SR**	Res.	Res.	Res.	Res.	Res.	Res.	Res.	Res.	Res.	Res.	Res.	Res.	Res.	Res.	Res.	Res.	Res.	Res.	Res.	Res.	Res.	Res.	Res.	Res.	Res.	Res.	Res.	Res.	Res.	Res.	Res.	EWIF
	Reset value																																0

Refer to *Section 2.2.2: Memory map and register boundary addresses* for the register boundary addresses.

33 Real-time clock (RTC)

33.1 Introduction

The RTC provides an automatic wakeup to manage all low-power modes.

The real-time clock (RTC) is an independent BCD timer/counter. The RTC provides a time-of-day clock/calendar with programmable alarm interrupts.

The RTC includes also a periodic programmable wakeup flag with interrupt capability.

Two 32-bit registers contain the seconds, minutes, hours (12- or 24-hour format), day (day of week), date (day of month), month, and year, expressed in binary coded decimal format (BCD). The sub-seconds value is also available in binary format.

Compensations for 28-, 29- (leap year), 30-, and 31-day months are performed automatically. Daylight saving time compensation can also be performed.

Additional 32-bit registers contain the programmable alarm subseconds, seconds, minutes, hours, day, and date.

A digital calibration feature is available to compensate for any deviation in crystal oscillator accuracy.

After Backup domain reset, all RTC registers are protected against possible parasitic write accesses.

As long as the supply voltage remains in the operating range, the RTC never stops, regardless of the device status (Run mode, low-power mode or under reset).

33.2 RTC main features

The RTC unit main features are the following (see *Figure 325: RTC block diagram*):

- Calendar with subseconds, seconds, minutes, hours (12 or 24 format), day (day of week), date (day of month), month, and year.
- Daylight saving compensation programmable by software.
- Programmable alarm with interrupt function. The alarm can be triggered by any combination of the calendar fields.
- Automatic wakeup unit generating a periodic flag that triggers an automatic wakeup interrupt.
- Reference clock detection: a more precise second source clock (50 or 60 Hz) can be used to enhance the calendar precision.
- Accurate synchronization with an external clock using the subsecond shift feature.
- Digital calibration circuit (periodic counter correction): 0.95 ppm accuracy, obtained in a calibration window of several seconds
- Time-stamp function for event saving
- Tamper detection event with configurable filter and internal pull-up
- Maskable interrupts/events:
  - Alarm A
  - Alarm B
  - Wakeup interrupt
  - Time-stamp
  - Tamper detection
- 32 backup registers.

33.3 RTC functional description

33.3.1 RTC block diagram

Figure 325. RTC block diagram

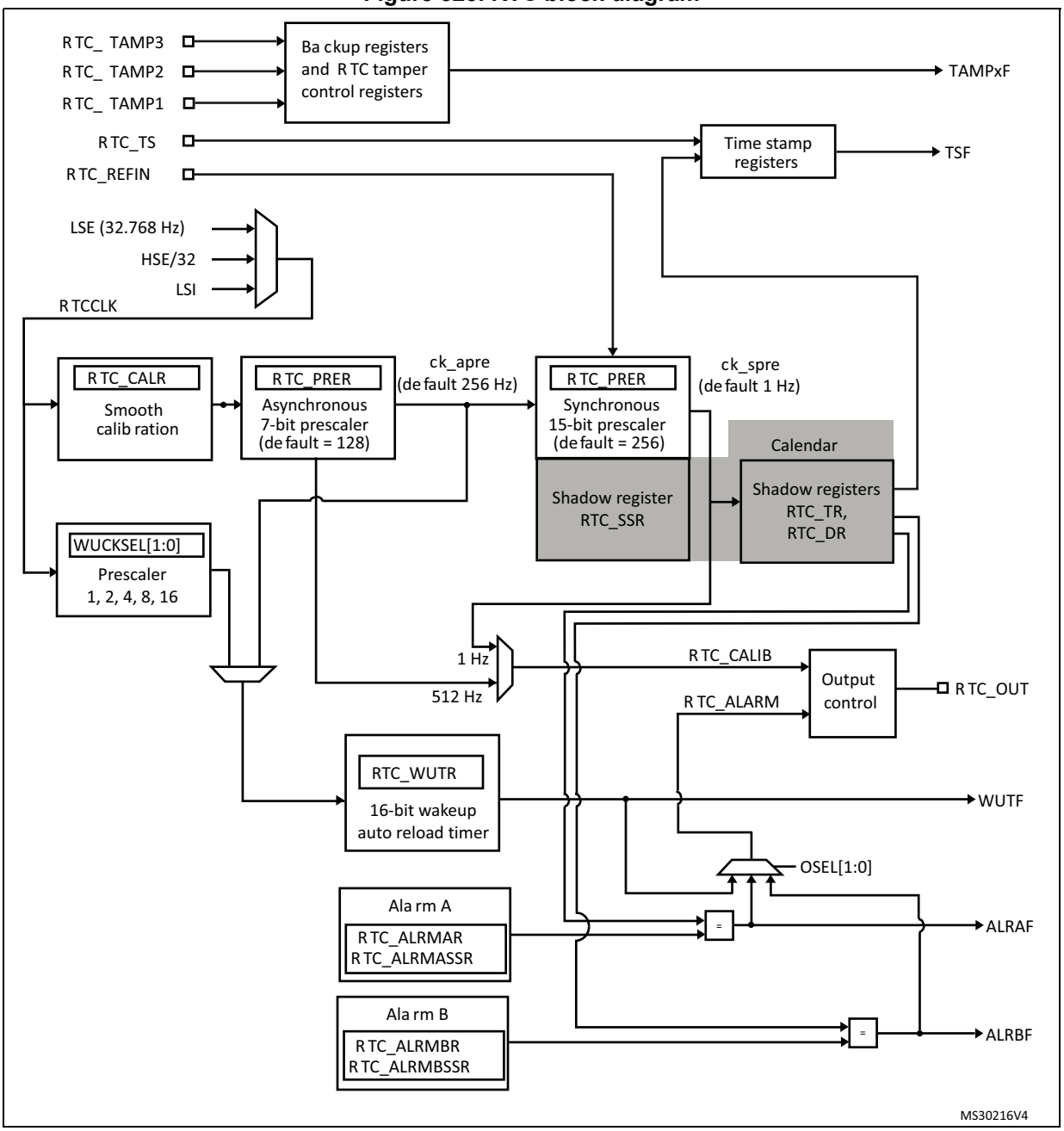

The RTC includes:

- Two alarms
- Three tamper events from I/Os
  - Tamper detection erases the backup registers.
- One timestamp event from I/O
- Tamper event detection can generate a timestamp event
- Timestamp can be generated when a switch to V_{BAT} occurs
- 32 x 32-bit backup registers
  - The backup registers (RTC_BKPxR) are implemented in the RTC domain that remains powered-on by VBAT when the VDD power is switched off.
- Alternate function outputs: RTC_OUT which selects one of the following two outputs:
  - RTC_CALIB: 512 Hz or 1Hz clock output (with an LSE frequency of 32.768 kHz). This output is enabled by setting the COE bit in the RTC_CR register.
  - RTC_ALARM: This output is enabled by configuring the OSEL[1:0] bits in the RTC_CR register which select the Alarm A, Alarm B or Wakeup outputs.
- Alternate function inputs:
  - RTC_TS: timestamp event
  - RTC_TAMP1: tamper1 event detection
  - RTC_TAMP2: tamper2 event detection
  - RTC_TAMP3: tamper3 event detection
  - RTC_REFIN: 50 or 60 Hz reference clock input

33.3.2 GPIOs controlled by the RTC

RTC_OUT, RTC_TS and RTC_TAMP1 are mapped on the same pin (PC13). PC13 pin configuration is controlled by the RTC, whatever the PC13 GPIO configuration. The RTC functions mapped on PC13 are available in all low-power modes and in VBAT mode.

The output mechanism follows the priority order shown in *Table 132*.

Table 132. RTC pin PC13 configuration(1)

PC13 Pin configuration and function	OSEL[1:0] bits (RTC_ALARM output enable)	COE bit (RTC_CALIB output enable)	RTC_OUT _RMP bit	RTC_ALARM _TYPE bit	TAMP1E bit (RTC_TAMP1 input enable)	TSE bit (RTC_TS input enable)
RTC_ALARM output OD	01 or 10 or 11	Don't care	0	0	Don't care	Don't care
			1			
RTC_ALARM output PP	01 or 10 or 11	Don't care	0	1	Don't care	Don't care
			1			
RTC_CALIB output PP	00	1	0	Don't care	Don't care	Don't care
RTC_TAMP1 input floating	00	0	Don't care	Don't care	1	0
	00	1	1			
	01 or 10 or 11	0				

Table 132. RTC pin PC13 configuration(1) (continued)

PC13 Pin configuration and function	OSEL[1:0] bits (RTC_ALARM output enable)	COE bit (RTC_CALIB output enable)	RTC_OUT _RMP bit	RTC_ALARM _TYPE bit	TAMP1E bit (RTC_TAMP1 input enable)	TSE bit (RTC_TS input enable)
RTC_TS and RTC_TAMP1 input floating	00	0	Don’t care	Don’t care	1	1
	00	1	1			
	01 or 10 or 11	0				
RTC_TS input floating	00	0	Don’t care	Don’t care	0	1
	00	1	1			
	01 or 10 or 11	0				
Wakeup pin or Standard GPIO	00	0	Don’t care	Don’t care	0	0
	00	1	1			
	01 or 10 or 11	0				

1. OD: open drain; PP: push-pull.

In addition, it is possible to remap RTC_OUT on PB2 pin thanks to RTC_OUT_RMP bit. In this case it is mandatory to configure PB2 GPIO registers as alternate function with the correct type. The remap functions are shown in *Table 133*.

Table 133. RTC_OUT mapping

OSEL[1:0] bits (RTC_ALARM output enable)	COE bit (RTC_CALIB output enable)	RTC_OUT_RMP bit	RTC_OUT on PC13	RTC_OUT on PB2
00	0	0	-	-
00	1		RTC_CALIB	-
01 or 10 or 11	Don’t care		RTC_ALARM	-
00	0	1	-	-
00	1		-	RTC_CALIB
01 or 10 or 11	0		-	RTC_ALARM
01 or 10 or 11	1		RTC_ALARM	RTC_CALIB

The table below summarizes the RTC pins and functions capability in all modes.

Table 134. RTC functions over modes

Pin	RTC functions	Functional in all low-power modes except Standby/Shutdown modes	Functional in Standby/Shutdown mode	Functional in V_{BAT} mode
PC13	RTC_TAMP1 RTC_TS RTC_OUT	YES	YES	YES
PA0	RTC_TAMP2	YES	YES	YES
PE6	RTC_TAMP3	YES	YES	YES
PB2	RTC_OUT	YES	NO	NO
PB15	RTC_REFIN	YES	NO	NO

33.3.3 Clock and prescalers

The RTC clock source (RTCCLK) is selected through the clock controller among the LSE clock, the LSI oscillator clock, and the HSE clock. For more information on the RTC clock source configuration, refer to *Section 6: Reset and clock control (RCC)*.

A programmable prescaler stage generates a 1 Hz clock which is used to update the calendar. To minimize power consumption, the prescaler is split into 2 programmable prescalers (see *Figure 325: RTC block diagram*):

- A 7-bit asynchronous prescaler configured through the PREDIV_A bits of the RTC_PRER register.
- A 15-bit synchronous prescaler configured through the PREDIV_S bits of the RTC_PRER register.

Note: When both prescalers are used, it is recommended to configure the asynchronous prescaler to a high value to minimize consumption.

The asynchronous prescaler division factor is set to 128, and the synchronous division factor to 256, to obtain an internal clock frequency of 1 Hz (ck_spre) with an LSE frequency of 32.768 kHz.

The minimum division factor is 1 and the maximum division factor is 2^{22}.

This corresponds to a maximum input frequency of around 4 MHz.

f_{ck_apre} is given by the following formula:

$$f_{CK_APRE} = \frac{f_{RTCCLK}}{PREDIV_A + 1}$$

The ck_apre clock is used to clock the binary RTC_SSR subseconds downcounter. When it reaches 0, RTC_SSR is reloaded with the content of PREDIV_S.

f_{ck_spre} is given by the following formula:

$$f_{CK_SPRE} = \frac{f_{RTCCLK}}{(PREDIV_S + 1) \times (PREDIV_A + 1)}$$

The ck_spre clock can be used either to update the calendar or as timebase for the 16-bit wakeup auto-reload timer. To obtain short timeout periods, the 16-bit wakeup auto-reload timer can also run with the RTCCLK divided by the programmable 4-bit asynchronous prescaler (see *Section 33.3.6: Periodic auto-wakeup* for details).

33.3.4 Real-time clock and calendar

The RTC calendar time and date registers are accessed through shadow registers which are synchronized with PCLK (APB clock). They can also be accessed directly in order to avoid waiting for the synchronization duration.

- RTC_SSR for the subseconds
- RTC_TR for the time
- RTC_DR for the date

Every two RTCCLK periods, the current calendar value is copied into the shadow registers, and the RSF bit of RTC_ISR register is set (see *Section 33.6.4: RTC initialization and status register (RTC_ISR)*). The copy is not performed in Stop and Standby mode. When exiting these modes, the shadow registers are updated after up to 2 RTCCLK periods.

When the application reads the calendar registers, it accesses the content of the shadow registers. It is possible to make a direct access to the calendar registers by setting the BYPSHAD control bit in the RTC_CR register. By default, this bit is cleared, and the user accesses the shadow registers.

When reading the RTC_SSR, RTC_TR or RTC_DR registers in BYPSHAD=0 mode, the frequency of the APB clock (f_{APB}) must be at least 7 times the frequency of the RTC clock (f_{RTCCLK}).

The shadow registers are reset by system reset.

33.3.5 Programmable alarms

The RTC unit provides programmable alarm: Alarm A and Alarm B. The description below is given for Alarm A, but can be translated in the same way for Alarm B.

The programmable alarm function is enabled through the ALRAE bit in the RTC_CR register. The ALRAF is set to 1 if the calendar subseconds, seconds, minutes, hours, date or day match the values programmed in the alarm registers RTC_ALRMASSR and RTC_ALRMAR. Each calendar field can be independently selected through the MSKx bits of the RTC_ALRMAR register, and through the MASKSSx bits of the RTC_ALRMASSR register. The alarm interrupt is enabled through the ALRAIE bit in the RTC_CR register.

Caution: If the seconds field is selected (MSK1 bit reset in RTC_ALRMAR), the synchronous prescaler division factor set in the RTC_PRER register must be at least 3 to ensure correct behavior.

Alarm A and Alarm B (if enabled by bits OSEL[1:0] in RTC_CR register) can be routed to the RTC_ALARM output. RTC_ALARM output polarity can be configured through bit POL the RTC_CR register.

33.3.6 Periodic auto-wakeup

The periodic wakeup flag is generated by a 16-bit programmable auto-reload down-counter. The wakeup timer range can be extended to 17 bits.

The wakeup function is enabled through the WUTE bit in the RTC_CR register.

The wakeup timer clock input can be:

- RTC clock (RTCCLK) divided by 2, 4, 8, or 16.

  When RTCCLK is LSE(32.768kHz), this allows to configure the wakeup interrupt period from 122 µs to 32 s, with a resolution down to 61 µs.
- ck_spre (usually 1 Hz internal clock)

  When ck_spre frequency is 1Hz, this allows to achieve a wakeup time from 1 s to around 36 hours with one-second resolution. This large programmable time range is divided in 2 parts:
  - from 1s to 18 hours when WUCKSEL [2:1] = 10
  - and from around 18h to 36h when WUCKSEL[2:1] = 11. In this last case 2^{16} is added to the 16-bit counter current value.When the initialization sequence is complete (see *Programming the wakeup timer on page 926*), the timer starts counting down.When the wakeup function is enabled, the down-counting remains active in low-power modes. In addition, when it reaches 0, the WUTF flag is set in the RTC_ISR register, and the wakeup counter is automatically reloaded with its reload value (RTC_WUTR register value).

The WUTF flag must then be cleared by software.

When the periodic wakeup interrupt is enabled by setting the WUTIE bit in the RTC_CR2 register, it can exit the device from low-power modes.

The periodic wakeup flag can be routed to the RTC_ALARM output provided it has been enabled through bits OSEL[1:0] of RTC_CR register. RTC_ALARM output polarity can be configured through the POL bit in the RTC_CR register.

System reset, as well as low-power modes (Sleep, Stop and Standby) have no influence on the wakeup timer.

33.3.7 RTC initialization and configuration

RTC register access

The RTC registers are 32-bit registers. The APB interface introduces 2 wait-states in RTC register accesses except on read accesses to calendar shadow registers when BYPSHAD=0.

RTC register write protection

After system reset, the RTC registers are protected against parasitic write access by clearing the DBP bit in the PWR_CR1 register (refer to the power control section). DBP bit must be set in order to enable RTC registers write access.

After Backup domain reset, all the RTC registers are write-protected. Writing to the RTC registers is enabled by writing a key into the Write Protection register, RTC_WPR.

The following steps are required to unlock the write protection on all the RTC registers except for RTC_TAMPCR, RTC_BKPxR, RTC_OR and RTC_ISR[13:8].

1. Write ‘0xCA’ into the RTC_WPR register.
2. Write ‘0x53’ into the RTC_WPR register.

Writing a wrong key reactivates the write protection.

The protection mechanism is not affected by system reset.

Calendar initialization and configuration

To program the initial time and date calendar values, including the time format and the prescaler configuration, the following sequence is required:

1. Set INIT bit to 1 in the RTC_ISR register to enter initialization mode. In this mode, the calendar counter is stopped and its value can be updated.
2. Poll INITF bit of in the RTC_ISR register. The initialization phase mode is entered when INITF is set to 1. It takes around 2 RTCCLK clock cycles (due to clock synchronization).
3. To generate a 1 Hz clock for the calendar counter, program both the prescaler factors in RTC_PRER register.
4. Load the initial time and date values in the shadow registers (RTC_TR and RTC_DR), and configure the time format (12 or 24 hours) through the FMT bit in the RTC_CR register.
5. Exit the initialization mode by clearing the INIT bit. The actual calendar counter value is then automatically loaded and the counting restarts after 4 RTCCLK clock cycles.

When the initialization sequence is complete, the calendar starts counting.

Note: After a system reset, the application can read the INITS flag in the RTC_ISR register to check if the calendar has been initialized or not. If this flag equals 0, the calendar has not been initialized since the year field is set at its Backup domain reset default value (0x00).

To read the calendar after initialization, the software must first check that the RSF flag is set in the RTC_ISR register.

Daylight saving time

The daylight saving time management is performed through bits SUB1H, ADD1H, and BKP of the RTC_CR register.

Using SUB1H or ADD1H, the software can subtract or add one hour to the calendar in one single operation without going through the initialization procedure.

In addition, the software can use the BKP bit to memorize this operation.

Programming the alarm

A similar procedure must be followed to program or update the programmable alarms. The procedure below is given for Alarm A but can be translated in the same way for Alarm B.

1. Clear ALRAE in RTC_CR to disable Alarm A.
2. Program the Alarm A registers (RTC_ALRMASSR/RTC_ALRMAR).
3. Set ALRAE in the RTC_CR register to enable Alarm A again.

Note: Each change of the RTC_CR register is taken into account after around 2 RTCCLK clock cycles due to clock synchronization.

Programming the wakeup timer

The following sequence is required to configure or change the wakeup timer auto-reload value (WUT[15:0] in RTC_WUTR):

1. Clear WUTE in RTC_CR to disable the wakeup timer.
2. Poll WUTWF until it is set in RTC_ISR to make sure the access to wakeup auto-reload counter and to WUCKSEL[2:0] bits is allowed. It takes around 2 RTCCLK clock cycles (due to clock synchronization).
3. Program the wakeup auto-reload value WUT[15:0], and the wakeup clock selection (WUCKSEL[2:0] bits in RTC_CR). Set WUTE in RTC_CR to enable the timer again. The wakeup timer restarts down-counting. The WUTWF bit is cleared up to 2 RTCCLK clock cycles after WUTE is cleared, due to clock synchronization.

33.3.8 Reading the calendar

When BYPSHAD control bit is cleared in the RTC_CR register

To read the RTC calendar registers (RTC_SSR, RTC_TR and RTC_DR) properly, the APB clock frequency (f_{PCLK}) must be equal to or greater than seven times the RTC clock frequency (f_{RTCCLK}). This ensures a secure behavior of the synchronization mechanism.

If the APB clock frequency is less than seven times the RTC clock frequency, the software must read the calendar time and date registers twice. If the second read of the RTC_TR gives the same result as the first read, this ensures that the data is correct. Otherwise a third read access must be done. In any case the APB clock frequency must never be lower than the RTC clock frequency.

The RSF bit is set in RTC_ISR register each time the calendar registers are copied into the RTC_SSR, RTC_TR and RTC_DR shadow registers. The copy is performed every two RTCCLK cycles. To ensure consistency between the 3 values, reading either RTC_SSR or RTC_TR locks the values in the higher-order calendar shadow registers until RTC_DR is read. In case the software makes read accesses to the calendar in a time interval smaller than 2 RTCCLK periods: RSF must be cleared by software after the first calendar read, and then the software must wait until RSF is set before reading again the RTC_SSR, RTC_TR and RTC_DR registers.

After waking up from low-power mode (Stop or Standby), RSF must be cleared by software. The software must then wait until it is set again before reading the RTC_SSR, RTC_TR and RTC_DR registers.

The RSF bit must be cleared after wakeup and not before entering low-power mode.

After a system reset, the software must wait until RSF is set before reading the RTC_SSR, RTC_TR and RTC_DR registers. Indeed, a system reset resets the shadow registers to their default values.

After an initialization (refer to *Calendar initialization and configuration on page 926*): the software must wait until RSF is set before reading the RTC_SSR, RTC_TR and RTC_DR registers.

After synchronization (refer to *Section 33.3.10: RTC synchronization*): the software must wait until RSF is set before reading the RTC_SSR, RTC_TR and RTC_DR registers.

When the BYPSHAD control bit is set in the RTC_CR register (bypass shadow registers)

Reading the calendar registers gives the values from the calendar counters directly, thus eliminating the need to wait for the RSF bit to be set. This is especially useful after exiting

from low-power modes (STOP or Standby), since the shadow registers are not updated during these modes.

When the BYPSHAD bit is set to 1, the results of the different registers might not be coherent with each other if an RTCCLK edge occurs between two read accesses to the registers. Additionally, the value of one of the registers may be incorrect if an RTCCLK edge occurs during the read operation. The software must read all the registers twice, and then compare the results to confirm that the data is coherent and correct. Alternatively, the software can just compare the two results of the least-significant calendar register.

Note: While BYPSHAD=1, instructions which read the calendar registers require one extra APB cycle to complete.

33.3.9 Resetting the RTC

The calendar shadow registers (RTC_SSR, RTC_TR and RTC_DR) and some bits of the RTC status register (RTC_ISR) are reset to their default values by all available system reset sources.

On the contrary, the following registers are reset to their default values by a Backup domain reset and are not affected by a system reset: the RTC current calendar registers, the RTC control register (RTC_CR), the prescaler register (RTC_PRER), the RTC calibration register (RTC_CALR), the RTC shift register (RTC_SHIFTR), the RTC timestamp registers (RTC_TSSSR, RTC_TSTR and RTC_TSDR), the RTC tamper and alternate function configuration register (RTC_TAMPCR), the RTC backup registers (RTC_BKPxR), the wakeup timer register (RTC_WUTR), the Alarm A and Alarm B registers (RTC_ALRMASSR/RTC_ALRMAR and RTC_ALRMBSSR/RTC_ALRMBR), and the Option register (RTC_OR).

In addition, when it is clocked by the LSE, the RTC keeps on running under system reset if the reset source is different from the Backup domain reset one (refer to the RTC clock section of the Reset and clock controller for details on the list of RTC clock sources not affected by system reset). When a Backup domain reset occurs, the RTC is stopped and all the RTC registers are set to their reset values.

33.3.10 RTC synchronization

The RTC can be synchronized to a remote clock with a high degree of precision. After reading the sub-second field (RTC_SSR or RTC_TSSSR), a calculation can be made of the precise offset between the times being maintained by the remote clock and the RTC. The RTC can then be adjusted to eliminate this offset by “shifting” its clock by a fraction of a second using RTC_SHIFTR.

RTC_SSR contains the value of the synchronous prescaler counter. This allows one to calculate the exact time being maintained by the RTC down to a resolution of 1 / (PREDIV_S + 1) seconds. As a consequence, the resolution can be improved by increasing the synchronous prescaler value (PREDIV_S[14:0]. The maximum resolution allowed (30.52 µs with a 32768 Hz clock) is obtained with PREDIV_S set to 0x7FFF.

However, increasing PREDIV_S means that PREDIV_A must be decreased in order to maintain the synchronous prescaler output at 1 Hz. In this way, the frequency of the asynchronous prescaler output increases, which may increase the RTC dynamic consumption.

The RTC can be finely adjusted using the RTC shift control register (RTC_SHIFTR). Writing to RTC_SHIFTR can shift (either delay or advance) the clock by up to a second with a

resolution of 1 / (PREDIV_S + 1) seconds. The shift operation consists of adding the SUBFS[14:0] value to the synchronous prescaler counter SS[15:0]: this will delay the clock. If at the same time the ADD1S bit is set, this results in adding one second and at the same time subtracting a fraction of second, so this will advance the clock.

Caution: Before initiating a shift operation, the user must check that SS[15] = 0 in order to ensure that no overflow will occur.

As soon as a shift operation is initiated by a write to the RTC_SHIFTR register, the SHPF flag is set by hardware to indicate that a shift operation is pending. This bit is cleared by hardware as soon as the shift operation has completed.

Caution: This synchronization feature is not compatible with the reference clock detection feature: firmware must not write to RTC_SHIFTR when REFCKON=1.

33.3.11 RTC reference clock detection

The update of the RTC calendar can be synchronized to a reference clock, RTC_REFIN, which is usually the mains frequency (50 or 60 Hz). The precision of the RTC_REFIN reference clock should be higher than the 32.768 kHz LSE clock. When the RTC_REFIN detection is enabled (REFCKON bit of RTC_CR set to 1), the calendar is still clocked by the LSE, and RTC_REFIN is used to compensate for the imprecision of the calendar update frequency (1 Hz).

Each 1 Hz clock edge is compared to the nearest RTC_REFIN clock edge (if one is found within a given time window). In most cases, the two clock edges are properly aligned. When the 1 Hz clock becomes misaligned due to the imprecision of the LSE clock, the RTC shifts the 1 Hz clock a bit so that future 1 Hz clock edges are aligned. Thanks to this mechanism, the calendar becomes as precise as the reference clock.

The RTC detects if the reference clock source is present by using the 256 Hz clock (ck_apre) generated from the 32.768 kHz quartz. The detection is performed during a time window around each of the calendar updates (every 1 s). The window equals 7 ck_apre periods when detecting the first reference clock edge. A smaller window of 3 ck_apre periods is used for subsequent calendar updates.

Each time the reference clock is detected in the window, the asynchronous prescaler which outputs the ck_apre clock is forced to reload. This has no effect when the reference clock and the 1 Hz clock are aligned because the prescaler is being reloaded at the same moment. When the clocks are not aligned, the reload shifts future 1 Hz clock edges a little for them to be aligned with the reference clock.

If the reference clock halts (no reference clock edge occurred during the 3 ck_apre window), the calendar is updated continuously based solely on the LSE clock. The RTC then waits for the reference clock using a large 7 ck_apre period detection window centered on the ck_spre edge.

When the RTC_REFIN detection is enabled, PREDIV_A and PREDIV_S must be set to their default values:

- PREDIV_A = 0x007F
- PREVID_S = 0x00FF

Note: RTC_REFIN clock detection is not available in Standby mode.

33.3.12 RTC smooth digital calibration

The RTC frequency can be digitally calibrated with a resolution of about 0.954 ppm with a range from -487.1 ppm to +488.5 ppm. The correction of the frequency is performed using series of small adjustments (adding and/or subtracting individual RTCCLK pulses). These adjustments are fairly well distributed so that the RTC is well calibrated even when observed over short durations of time.

The smooth digital calibration is performed during a cycle of about 2^{20} RTCCLK pulses, or 32 seconds when the input frequency is 32768 Hz. This cycle is maintained by a 20-bit counter, cal_cnt[19:0], clocked by RTCCLK.

The smooth calibration register (RTC_CALR) specifies the number of RTCCLK clock cycles to be masked during the 32-second cycle:

- Setting the bit CALM[0] to 1 causes exactly one pulse to be masked during the 32-second cycle.
- Setting CALM[1] to 1 causes two additional cycles to be masked
- Setting CALM[2] to 1 causes four additional cycles to be masked
- and so on up to CALM[8] set to 1 which causes 256 clocks to be masked.

Note: CALM[8:0] (RTC_CALR) specifies the number of RTCCLK pulses to be masked during the 32-second cycle. Setting the bit CALM[0] to '1' causes exactly one pulse to be masked during the 32-second cycle at the moment when cal_cnt[19:0] is 0x80000; CALM[1]=1 causes two other cycles to be masked (when cal_cnt is 0x40000 and 0xC0000); CALM[2]=1 causes four other cycles to be masked (cal_cnt = 0x20000/0x60000/0xA0000/ 0xE0000); and so on up to CALM[8]=1 which causes 256 clocks to be masked (cal_cnt = 0xXX800).

While CALM allows the RTC frequency to be reduced by up to 487.1 ppm with fine resolution, the bit CALP can be used to increase the frequency by 488.5 ppm. Setting CALP to '1' effectively inserts an extra RTCCLK pulse every 2^{11} RTCCLK cycles, which means that 512 clocks are added during every 32-second cycle.

Using CALM together with CALP, an offset ranging from -511 to +512 RTCCLK cycles can be added during the 32-second cycle, which translates to a calibration range of -487.1 ppm to +488.5 ppm with a resolution of about 0.954 ppm.

The formula to calculate the effective calibrated frequency (F_{CAL}) given the input frequency (F_{RTCCLK}) is as follows:

$$F_{CAL} = F_{RTCCLK} \times [1 + (CALP \times 512 - CALM) / (2^{20} + CALM - CALP \times 512)]$$

Calibration when PREDIV_A<3

The CALP bit can not be set to 1 when the asynchronous prescaler value (PREDIV_A bits in RTC_PRER register) is less than 3. If CALP was already set to 1 and PREDIV_A bits are set to a value less than 3, CALP is ignored and the calibration operates as if CALP was equal to 0.

To perform a calibration with PREDIV_A less than 3, the synchronous prescaler value (PREDIV_S) should be reduced so that each second is accelerated by 8 RTCCLK clock cycles, which is equivalent to adding 256 clock cycles every 32 seconds. As a result, between 255 and 256 clock pulses (corresponding to a calibration range from 243.3 to 244.1 ppm) can effectively be added during each 32-second cycle using only the CALM bits.

With a nominal RTCCLK frequency of 32768 Hz, when PREDIV_A equals 1 (division factor of 2), PREDIV_S should be set to 16379 rather than 16383 (4 less). The only other

interesting case is when PREDIV_A equals 0, PREDIV_S should be set to 32759 rather than 32767 (8 less).

If PREDIV_S is reduced in this way, the formula given the effective frequency of the

calibrated input clock is as follows:

$F_{CAL} = F_{RTCCLK} \times [1 + (256 - CALM) / (2^{20} + CALM - 256)]$

In this case, CALM[7:0] equals 0x100 (the midpoint of the CALM range) is the correct setting if RTCCLK is exactly 32768.00 Hz.

Verifying the RTC calibration

RTC precision is ensured by measuring the precise frequency of RTCCLK and calculating the correct CALM value and CALP values. An optional 1 Hz output is provided to allow applications to measure and verify the RTC precision.

Measuring the precise frequency of the RTC over a limited interval can result in a measurement error of up to 2 RTCCLK clock cycles over the measurement period, depending on how the digital calibration cycle is aligned with the measurement period.

However, this measurement error can be eliminated if the measurement period is the same length as the calibration cycle period. In this case, the only error observed is the error due to the resolution of the digital calibration.

- By default, the calibration cycle period is 32 seconds.

Using this mode and measuring the accuracy of the 1 Hz output over exactly 32 seconds guarantees that the measure is within 0.477 ppm (0.5 RTCCLK cycles over 32 seconds, due to the limitation of the calibration resolution).

- CALW16 bit of the RTC_CALR register can be set to 1 to force a 16- second calibration cycle period.

In this case, the RTC precision can be measured during 16 seconds with a maximum error of 0.954 ppm (0.5 RTCCLK cycles over 16 seconds). However, since the calibration resolution is reduced, the long term RTC precision is also reduced to 0.954 ppm: CALM[0] bit is stuck at 0 when CALW16 is set to 1.

- CALW8 bit of the RTC_CALR register can be set to 1 to force a 8- second calibration cycle period.

In this case, the RTC precision can be measured during 8 seconds with a maximum error of 1.907 ppm (0.5 RTCCLK cycles over 8s). The long term RTC precision is also reduced to 1.907 ppm: CALM[1:0] bits are stuck at 00 when CALW8 is set to 1.

Re-calibration on-the-fly

The calibration register (RTC_CALR) can be updated on-the-fly while RTC_ISR/INITF=0, by using the follow process:

1. Poll the RTC_ISR/RECALPF (re-calibration pending flag).
2. If it is set to 0, write a new value to RTC_CALR, if necessary. RECALPF is then automatically set to 1
3. Within three ck_apre cycles after the write operation to RTC_CALR, the new calibration settings take effect.

33.3.13 Time-stamp function

Time-stamp is enabled by setting the TSE or ITSE bits of RTC_CR register to 1.

When TSE is set:

The calendar is saved in the time-stamp registers (RTC_TSSSR, RTC_TSTR, RTC_TSDR) when a time-stamp event is detected on the RTC_TS pin.

When ITSE is set:

The calendar is saved in the time-stamp registers (RTC_TSSSR, RTC_TSTR, RTC_TSDR) when an internal time-stamp event is detected. The internal timestamp event is generated by the switch to the VBAT supply.

When a time-stamp event occurs, due to internal or external event, the time-stamp flag bit (TSF) in RTC_ISR register is set. In case the event is internal, the ITSF flag is also set in RTC_ISR register.

By setting the TSIE bit in the RTC_CR register, an interrupt is generated when a time-stamp event occurs.

If a new time-stamp event is detected while the time-stamp flag (TSF) is already set, the time-stamp overflow flag (TSOVF) flag is set and the time-stamp registers (RTC_TSTR and RTC_TSDR) maintain the results of the previous event.

Note: *TSF is set 2 ck_apre cycles after the time-stamp event occurs due to synchronization process.*

There is no delay in the setting of TSOVF. This means that if two time-stamp events are close together, TSOVF can be seen as '1' while TSF is still '0'. As a consequence, it is recommended to poll TSOVF only after TSF has been set.

Caution: If a time-stamp event occurs immediately after the TSF bit is supposed to be cleared, then both TSF and TSOVF bits are set.To avoid masking a time-stamp event occurring at the same moment, the application must not write ‘0’ into TSF bit unless it has already read it to ‘1’.

Optionally, a tamper event can cause a time-stamp to be recorded. See the description of the TAMPTS control bit in *Section 33.6.16: RTC tamper configuration register (RTC_TAMPCR)*.

33.3.14 Tamper detection

The RTC_TAMPx input events can be configured either for edge detection, or for level detection with filtering.

The tamper detection can be configured for the following purposes:

- erase the RTC backup registers (default configuration)
- generate an interrupt, capable to wakeup from Stop and Standby modes
- generate a hardware trigger for the low-power timers

RTC backup registers

The backup registers (RTC_BKPxR) are not reset by system reset or when the device wakes up from Standby mode.

The backup registers are reset when a tamper detection event occurs (see *Section 33.6.20: RTC backup registers (RTC_BKPxR)* and *Tamper detection initialization on page 933*, or

when the readout protection of the flash is changed from level 1 to level 0) except if the TAMPxNOERASE bit is set, or if TAMPxMF is set in the RTC_TAMPCR register.

Tamper detection initialization

Each input can be enabled by setting the corresponding TAMPxE bits to 1 in the RTC_TAMPCR register.

Each RTC_TAMPx tamper detection input is associated with a flag TAMPxF in the RTC_ISR register.

When TAMPxMF is cleared:

The TAMPxF flag is asserted after the tamper event on the pin, with the latency provided below:

- 3 ck_apre cycles when TAMPFLT differs from 0x0 (Level detection with filtering)
- 3 ck_apre cycles when TAMPTS=1 (Timestamp on tamper event)
- No latency when TAMPFLT=0x0 (Edge detection) and TAMPTS=0

A new tamper occurring on the same pin during this period and as long as TAMPxF is set cannot be detected.

When TAMPxMF is set:

A new tamper occurring on the same pin cannot be detected during the latency described above and 2.5 ck_rtc additional cycles.

By setting the TAMPIE bit in the RTC_TAMPCR register, an interrupt is generated when a tamper detection event occurs (when TAMPxF is set). Setting TAMPIE is not allowed when one or more TAMPxMF is set.

When TAMPIE is cleared, each tamper pin event interrupt can be individually enabled by setting the corresponding TAMPxIE bit in the RTC_TAMPCR register. Setting TAMPxIE is not allowed when the corresponding TAMPxMF is set.

Trigger output generation on tamper event

The tamper event detection can be used as trigger input by the low-power timers.

When TAMPxMF bit in cleared in RTC_TAMPCR register, the TAMPxF flag must be cleared by software in order to allow a new tamper detection on the same pin.

When TAMPxMF bit is set, the TAMPxF flag is masked, and kept cleared in RTC_ISR register. This configuration allows to trig automatically the low-power timers in Stop mode, without requiring the system wakeup to perform the TAMPxF clearing. In this case, the backup registers are not cleared.

Timestamp on tamper event

With TAMPTS set to ‘1’, any tamper event causes a timestamp to occur. In this case, either the TSF bit or the TSOVF bit are set in RTC_ISR, in the same manner as if a normal timestamp event occurs. The affected tamper flag register TAMPxF is set at the same time that TSF or TSOVF is set.

Edge detection on tamper inputs

If the TAMPFLT bits are “00”, the RTC_TAMPx pins generate tamper detection events when either a rising edge or a falling edge is observed depending on the corresponding

TAMPxTRG bit. The internal pull-up resistors on the RTC_TAMPx inputs are deactivated when edge detection is selected.

Caution: When using the edge detection, it is recommended to check by software the tamper pin level just after enabling the tamper detection (by reading the GPIO registers), and before writing sensitive values in the backup registers, to ensure that an active edge did not occur before enabling the tamper event detection.
When TAMPFLT="00" and TAMPxTRG = 0 (rising edge detection), a tamper event may be detected by hardware if the tamper input is already at high level before enabling the tamper detection.

After a tamper event has been detected and cleared, the RTC_TAMPx alternate function should be disabled and then re-enabled (TAMPxE set to 1) before re-programming the backup registers (RTC_BKPxR). This prevents the application from writing to the backup registers while the RTC_TAMPx input value still indicates a tamper detection. This is equivalent to a level detection on the RTC_TAMPx alternate function input.

Note: Tamper detection is still active when V_{DD} power is switched off. To avoid unwanted resetting of the backup registers, the pin to which the RTC_TAMPx alternate function is mapped should be externally tied to the correct level.

Level detection with filtering on RTC_TAMPx inputs

Level detection with filtering is performed by setting TAMPFLT to a non-zero value. A tamper detection event is generated when either 2, 4, or 8 (depending on TAMPFLT) consecutive samples are observed at the level designated by the TAMPxTRG bits.

The RTC_TAMPx inputs are precharged through the I/O internal pull-up resistance before its state is sampled, unless disabled by setting TAMPPUDIS to 1,The duration of the precharge is determined by the TAMPPRCH bits, allowing for larger capacitances on the RTC_TAMPx inputs.

The trade-off between tamper detection latency and power consumption through the pull-up can be optimized by using TAMPFREQ to determine the frequency of the sampling for level detection.

Note: Refer to the datasheets for the electrical characteristics of the pull-up resistors.

33.3.15 Calibration clock output

When the COE bit is set to 1 in the RTC_CR register, a reference clock is provided on the RTC_CALIB device output.

If the COSEL bit in the RTC_CR register is reset and PREDIV_A = 0x7F, the RTC_CALIB frequency is $f_{RTCCLK/64}$. This corresponds to a calibration output at 512 Hz for an RTCCLK frequency at 32.768 kHz. The RTC_CALIB duty cycle is irregular: there is a light jitter on falling edges. It is therefore recommended to use rising edges.

When COSEL is set and “PREDIV_S+1” is a non-zero multiple of 256 (i.e: PREDIV_S[7:0] = 0xFF), the RTC_CALIB frequency is $f_{RTCCLK}/(256 * (PREDIV_A+1))$. This corresponds to a calibration output at 1 Hz for prescaler default values (PREDIV_A = Ox7F, PREDIV_S = 0xFF), with an RTCCLK frequency at 32.768 kHz. The 1 Hz output is affected when a shift operation is on going and may toggle during the shift operation (SHPF=1).

Note: When the RTC_CALIB or RTC_ALARM output is selected, the RTC_OUT pin is automatically configured in output alternate function.

33.3.16 Alarm output

The OSEL[1:0] control bits in the RTC_CR register are used to activate the alarm alternate function output RTC_ALARM, and to select the function which is output. These functions reflect the contents of the corresponding flags in the RTC_ISR register.

The polarity of the output is determined by the POL control bit in RTC_CR so that the opposite of the selected flag bit is output when POL is set to 1.

Alarm alternate function output

The RTC_ALARM pin can be configured in output open drain or output push-pull using the control bit RTC_ALARM_TYPE in the RTC_OR register.

Note: Once the RTC_ALARM output is enabled, it has priority over RTC_CALIB (COE bit is don't care and must be kept cleared).

When the RTC_CALIB or RTC_ALARM output is selected, the RTC_OUT *pin is automatically configured in output alternate function.*

33.4 RTC low-power modes

Table 135. Effect of low-power modes on RTC

Mode	Description
Sleep	No effect RTC interrupts cause the device to exit the Sleep mode.
Low-power run	No effect.
Low-power sleep	No effect. RTC interrupts cause the device to exit the Low-power sleep mode.
Stop 0	Peripheral registers content is kept.
Stop 1	
Stop 2	
Standby	The RTC remains active when the RTC clock source is LSE or LSI. RTC alarm, RTC tamper event, RTC timestamp event, and RTC Wakeup cause the device to exit the Standby mode.
Shutdown	The RTC remains active when the RTC clock source is LSE. RTC alarm, RTC tamper event, RTC timestamp event, and RTC Wakeup cause the device to exit the Shutdown mode.

33.5 RTC interrupts

All RTC interrupts are connected to the NVIC controller. Refer to *Section 13: Extended interrupts and events controller (EXTI).*

To enable the RTC Alarm interrupt, the following sequence is required:

1. Configure and enable the NVIC line corresponding to the RTC Alarm event in interrupt mode and select the rising edge sensitivity.
2. Configure and enable the RTC_ALARM IRQ channel in the NVIC.
3. Configure the RTC to generate RTC alarms.

To enable the RTC Tamper interrupt, the following sequence is required:

1. Configure and enable the NVIC line corresponding to the RTC Tamper event in interrupt mode and select the rising edge sensitivity.
2. Configure and Enable the RTC_TAMP_STAMP IRQ channel in the NVIC.
3. Configure the RTC to detect the RTC tamper event.

To enable the RTC TimeStamp interrupt, the following sequence is required:

1. Configure and enable the NVIC line corresponding to the RTC TimeStamp event in interrupt mode and select the rising edge sensitivity.
2. Configure and Enable the RTC_TAMP_STAMP IRQ channel in the NVIC.
3. Configure the RTC to detect the RTC time-stamp event.

To enable the Wakeup timer interrupt, the following sequence is required:

1. Configure and enable the NVIC line corresponding to the Wakeup timer even in interrupt mode and select the rising edge sensitivity.
2. Configure and Enable the RTC_WKUP IRQ channel in the NVIC.
3. Configure the RTC to detect the RTC Wakeup timer event.

Table 136. Interrupt control bits

Interrupt event	Event flag	Enable control bit	Exit from Sleep mode	Exit from Stop mode	Exit from Standby mode
Alarm A	ALRAF	ALRAIE	yes	yes(1)	yes(1)
Alarm B	ALRBF	ALRBIE	yes	yes(1)	yes(1)
RTC_TS input (timestamp)	TSF	TSIE	yes	yes(1)	yes(1)
RTC_TAMP1 input detection	TAMP1F	TAMPIE	yes	yes(1)	yes(1)
RTC_TAMP2 input detection	TAMP2F	TAMPIE	yes	yes(1)	yes(1)
RTC_TAMP3 input detection	TAMP3F	TAMPIE	yes	yes(1)	yes(1)
Wakeup timer interrupt	WUTF	WUTIE	yes	yes(1)	yes(1)

1. Wakeup from STOP and Standby modes is possible only when the RTC clock source is LSE or LSI.

33.6 RTC registers

Refer to *Section 1.1 on page 55* of the reference manual for a list of abbreviations used in register descriptions.

The peripheral registers can be accessed by words (32-bit).

33.6.1 RTC time register (RTC_TR)

The RTC_TR is the calendar time shadow register. This register must be written in initialization mode only. Refer to *Calendar initialization and configuration on page 926* and *Reading the calendar on page 927*.

This register is write protected. The write access procedure is described in *RTC register write protection on page 925*.

Address offset: 0x00

Backup domain reset value: 0x0000 0000

System reset: 0x0000 0000 when BYPSHAD = 0. Not affected when BYPSHAD = 1.

31	30	29	28	27	26	25	24	23	22	21	20	19	18	17	16
Res.	Res.	Res.	Res.	Res.	Res.	Res.	Res.	Res.	PM	HT[1:0]		HU[3:0]			
									rw	rw	rw	rw	rw	rw	rw

15	14	13	12	11	10	9	8	7	6	5	4	3	2	1	0
Res.	MNT[2:0]			MNU[3:0]				Res.	ST[2:0]			SU[3:0]			
	rw	rw	rw	rw	rw	rw	rw		rw	rw	rw	rw	rw	rw	rw

Bits 31-23 Reserved, must be kept at reset value

Bit 22 **PM**: AM/PM notation
0: AM or 24-hour format
1: PM

Bits 21:20 **HT[1:0]**: Hour tens in BCD format

Bits 19:16 **HU[3:0]**: Hour units in BCD format

Bit 15 Reserved, must be kept at reset value.

Bits 14:12 **MNT[2:0]**: Minute tens in BCD format

Bits 11:8 **MNU[3:0]**: Minute units in BCD format

Bit 7 Reserved, must be kept at reset value.

Bits 6:4 **ST[2:0]**: Second tens in BCD format

Bits 3:0 **SU[3:0]**: Second units in BCD format

33.6.2 RTC date register (RTC_DR)

The RTC_DR is the calendar date shadow register. This register must be written in initialization mode only. Refer to *Calendar initialization and configuration on page 926* and *Reading the calendar on page 927*.

This register is write protected. The write access procedure is described in *RTC register write protection on page 925*.

Address offset: 0x04

Backup domain reset value: 0x0000 2101

System reset: 0x0000 2101 when BYPSHAD = 0. Not affected when BYPSHAD = 1.

31	30	29	28	27	26	25	24	23	22	21	20	19	18	17	16
Res.	Res.	Res.	Res.	Res.	Res.	Res.	Res.	YT[3:0]				YU[3:0]			
								rw	rw	rw	rw	rw	rw	rw	rw

15	14	13	12	11	10	9	8	7	6	5	4	3	2	1	0
WDU[2:0]			MT	MU[3:0]				Res.	Res.	DT[1:0]		DU[3:0]			
rw	rw	rw	rw	rw	rw	rw	rw			rw	rw	rw	rw	rw	rw

Bits 31:24 Reserved, must be kept at reset value

Bits 23:20 **YT[3:0]**: Year tens in BCD format

Bits 19:16 **YU[3:0]**: Year units in BCD format

Bits 15:13 **WDU[2:0]**: Week day units
000: forbidden
001: Monday
...
111: Sunday

Bit 12 **MT**: Month tens in BCD format

Bits 11:8 **MU**: Month units in BCD format

Bits 7:6 Reserved, must be kept at reset value.

Bits 5:4 **DT[1:0]**: Date tens in BCD format

Bits 3:0 **DU[3:0]**: Date units in BCD format

33.6.3 RTC control register (RTC_CR)

Address offset: 0x08

Backup domain reset value: 0x0000 0000

System reset: not affected

31	30	29	28	27	26	25	24	23	22	21	20	19	18	17	16
Res.	Res.	Res.	Res.	Res.	Res.	Res.	ITSE	COE	OSEL[1:0]		POL	COSEL	BKP	SUB1H	ADD1H
							rw	rw	rw	rw	rw	rw	rw	w	w

15	14	13	12	11	10	9	8	7	6	5	4	3	2	1	0
TSIE	WUTIE	ALRBIE	ALRAIE	TSE	WUTE	ALRBE	ALRAE	Res.	FMT	BYPS HAD	REFCKON	TSEDGE	WUCKSEL[2:0]		
rw	rw	rw	rw	rw	rw	rw	rw		rw	rw	rw	rw	rw	rw	rw

Bits 31:25 Reserved, must be kept at reset value.

Bit 24 **ITSE**: timestamp on internal event enable

0: internal event timestamp disabled
1: internal event timestamp enabled

Bit 23 **COE**: Calibration output enable

This bit enables the RTC_CALIB output

0: Calibration output disabled
1: Calibration output enabled

Bits 22:21 **OSEL[1:0]**: Output selection

These bits are used to select the flag to be routed to RTC_ALARM output

00: Output disabled
01: Alarm A output enabled
10: Alarm B output enabled
11: Wakeup output enabled

Bit 20 **POL**: Output polarity

This bit is used to configure the polarity of RTC_ALARM output

0: The pin is high when ALRAF/ALRBF/WUTF is asserted (depending on OSEL[1:0])
1: The pin is low when ALRAF/ALRBF/WUTF is asserted (depending on OSEL[1:0]).

Bit 19 **COSEL**: Calibration output selection

When COE=1, this bit selects which signal is output on RTC_CALIB.

0: Calibration output is 512 Hz
1: Calibration output is 1 Hz

These frequencies are valid for RTCCLK at 32.768 kHz and prescalers at their default values (PREDIV_A=127 and PREDIV_S=255). Refer to *Section 33.3.15: Calibration clock output*

Bit 18 **BKP**: Backup

This bit can be written by the user to memorize whether the daylight saving time change has been performed or not.

Bit 17 **SUB1H**: Subtract 1 hour (winter time change)

When this bit is set outside initialization mode, 1 hour is subtracted to the calendar time if the current hour is not 0. This bit is always read as 0.

Setting this bit has no effect when current hour is 0.

0: No effect
1: Subtracts 1 hour to the current time. This can be used for winter time change.

Bit 16 **ADD1H**: Add 1 hour (summer time change)

When this bit is set outside initialization mode, 1 hour is added to the calendar time. This bit is always read as 0.

0: No effect
1: Adds 1 hour to the current time. This can be used for summer time change

Bit 15 **TSIE**: Time-stamp interrupt enable

0: Time-stamp Interrupt disable
1: Time-stamp Interrupt enable

Bit 14 **WUTIE**: Wakeup timer interrupt enable

0: Wakeup timer interrupt disabled
1: Wakeup timer interrupt enabled

Bit 13 **ALRBIE**: *Alarm B interrupt enable*

0: Alarm B Interrupt disable
1: Alarm B Interrupt enable

Bit 12 **ALRAIE**: Alarm A interrupt enable

0: Alarm A interrupt disabled
1: Alarm A interrupt enabled

Bit 11 **TSE**: timestamp enable

0: timestamp disable
1: timestamp enable

Bit 10 **WUTE**: Wakeup timer enable

0: Wakeup timer disabled
1: Wakeup timer enabled

Bit 9 **ALRBE**: *Alarm B enable*

0: Alarm B disabled
1: Alarm B enabled

Bit 8 **ALRAE:** Alarm A enable

0: Alarm A disabled
1: Alarm A enabled

Bit 7 Reserved, must be kept at reset value.

Bit 6 **FMT**: Hour format

0: 24 hour/day format
1: AM/PM hour format

Bit 5 **BYPSHAD**: Bypass the shadow registers

0: Calendar values (when reading from RTC_SSR, RTC_TR, and RTC_DR) are taken from the shadow registers, which are updated once every two RTCCLK cycles.

1: Calendar values (when reading from RTC_SSR, RTC_TR, and RTC_DR) are taken directly from the calendar counters.

Note: If the frequency of the APB clock is less than seven times the frequency of RTCCLK, BYPSHAD must be set to '1'.

Bit 4 **REFCKON**: RTC_REFIN reference clock detection enable (50 or 60 Hz)

0: RTC_REFIN detection disabled
1: RTC_REFIN detection enabled

Note: PREDIV_S must be 0x00FF.

Bit 3 **TSEDGE**: Time-stamp event active edge

0: RTC_TS input rising edge generates a time-stamp event
1: RTC_TS input falling edge generates a time-stamp event
TSE must be reset when TSEDGE is changed to avoid unwanted TSF setting.

Bits 2:0 **WUCKSEL[2:0]**: Wakeup clock selection

000: RTC/16 clock is selected
001: RTC/8 clock is selected
010: RTC/4 clock is selected
011: RTC/2 clock is selected
10x: ck_spre (usually 1 Hz) clock is selected
11x: ck_spre (usually 1 Hz) clock is selected and 2^{16} is added to the WUT counter value (see note below)

Note: Bits 7, 6 and 4 of this register can be written in initialization mode only (RTC_ISR/INITF = 1).

WUT = Wakeup unit counter value. WUT = (0x0000 to 0xFFFF) + 0x10000 added when WUCKSEL[2:1 = 11].

Bits 2 to 0 of this register can be written only when RTC_CR WUTE bit = 0 and RTC_ISR WUTWF bit = 1.

It is recommended not to change the hour during the calendar hour increment as it could mask the incrementation of the calendar hour.

ADD1H and SUB1H changes are effective in the next second.

This register is write protected. The write access procedure is described in RTC register write protection on page 925.

Caution: TSE must be reset when TSEDGE is changed to avoid spuriously setting of TSF.

33.6.4 RTC initialization and status register (RTC_ISR)

This register is write protected (except for RTC_ISR[13:8] bits). The write access procedure is described in *RTC register write protection on page 925*.

Address offset: 0x0C

Backup domain reset value: 0x0000 0007

System reset: not affected except INIT, INITF, and RSF bits which are cleared to ‘0’

31	30	29	28	27	26	25	24	23	22	21	20	19	18	17	16
Res.	Res.	Res.	Res.	Res.	Res.	Res.	Res.	Res.	Res.	Res.	Res.	Res.	Res.	ITSF	RECALPF
														rc_w0	r
15	14	13	12	11	10	9	8	7	6	5	4	3	2	1	0
TAMP3F	TAMP2F	TAMP1F	TSOVF	TSF	WUTF	ALRBF	ALRAF	INIT	INITF	RSF	INITS	SHPF	WUTWF	ALRBWF	ALRAWF
rc_w0	rc_w0	rc_w0	rc_w0	rc_w0	rc_w0	rc_w0	rc_w0	rw	r	rc_w0	r	r	r	r	r

Bits 31:18 Reserved, must be kept at reset value

Bit 17 **ITSF**: Internal tTime-stamp flag

This flag is set by hardware when a time-stamp on the internal event occurs.

This flag is cleared by software by writing 0, and must be cleared together with TSF bit by writing 0 in both bits.

Bit 16 **RECALPF**: Recalibration pending Flag

The RECALPF status flag is automatically set to ‘1’ when software writes to the RTC_CALR register, indicating that the RTC_CALR register is blocked. When the new calibration settings are taken into account, this bit returns to ‘0’. Refer to *Re-calibration on-the-fly*.

Bit 15 **TAMP3F**: RTC_TAMP3 detection flag

This flag is set by hardware when a tamper detection event is detected on the RTC_TAMP3 input.

It is cleared by software writing 0

Bit 14 **TAMP2F**: RTC_TAMP2 detection flag

This flag is set by hardware when a tamper detection event is detected on the RTC_TAMP2 input.

It is cleared by software writing 0

Bit 13 **TAMP1F**: RTC_TAMP1 detection flag

This flag is set by hardware when a tamper detection event is detected on the RTC_TAMP1 input.

It is cleared by software writing 0

Bit 12 **TSOVF**: Time-stamp overflow flag

This flag is set by hardware when a time-stamp event occurs while TSF is already set.

This flag is cleared by software by writing 0. It is recommended to check and then clear TSOVF only after clearing the TSF bit. Otherwise, an overflow might not be noticed if a time-stamp event occurs immediately before the TSF bit is cleared.

Bit 11 **TSF**: Time-stamp flag

This flag is set by hardware when a time-stamp event occurs.

This flag is cleared by software by writing 0. If ITSF flag is set, TSF must be cleared together with ITSF by writing 0 in both bits.

Bit 10 **WUTF**: Wakeup timer flag

This flag is set by hardware when the wakeup auto-reload counter reaches 0.

This flag is cleared by software by writing 0.

This flag must be cleared by software at least 1.5 RTCCLK periods before WUTF is set to 1 again.

Bit 9 **ALRBF**: Alarm B flag

This flag is set by hardware when the time/date registers (RTC_TR and RTC_DR) match the Alarm B register (RTC_ALRMBR).

This flag is cleared by software by writing 0.

Bit 8 **ALRAF**: Alarm A flag

This flag is set by hardware when the time/date registers (RTC_TR and RTC_DR) match the Alarm A register (RTC_ALRMAR).

This flag is cleared by software by writing 0.

Bit 7 **INIT**: Initialization mode

0: Free running mode

1: Initialization mode used to program time and date register (RTC_TR and RTC_DR), and prescaler register (RTC_PRER). Counters are stopped and start counting from the new value when INIT is reset.

Bit 6 **INITF**: Initialization flag

When this bit is set to 1, the RTC is in initialization state, and the time, date and prescaler registers can be updated.

0: Calendar registers update is not allowed

1: Calendar registers update is allowed

Bit 5 **RSF**: Registers synchronization flag

This bit is set by hardware each time the calendar registers are copied into the shadow registers (RTC_SSRx, RTC_TRx and RTC_DRx). This bit is cleared by hardware in initialization mode, while a shift operation is pending (SHPF=1), or when in bypass shadow register mode (BYPSHAD=1). This bit can also be cleared by software.

It is cleared either by software or by hardware in initialization mode.

0: Calendar shadow registers not yet synchronized

1: Calendar shadow registers synchronized

Bit 4 **INITS**: Initialization status flag

This bit is set by hardware when the calendar year field is different from 0 (Backup domain reset state).

0: Calendar has not been initialized

1: Calendar has been initialized

Bit 3 **SHPF**: Shift operation pending

0: No shift operation is pending

1: A shift operation is pending

This flag is set by hardware as soon as a shift operation is initiated by a write to the RTC_SHIFTR register. It is cleared by hardware when the corresponding shift operation has been executed. Writing to the SHPF bit has no effect.

Bit 2 **WUTWF**: Wakeup timer write flag

This bit is set by hardware up to 2 RTCCLK cycles after the WUTE bit has been set to 0 in RTC_CR, and is cleared up to 2 RTCCLK cycles after the WUTE bit has been set to 1. The wakeup timer values can be changed when WUTE bit is cleared and WUTWF is set.

0: Wakeup timer configuration update not allowed

1: Wakeup timer configuration update allowed

Bit 1 **ALRBWF**: Alarm B write flag

This bit is set by hardware when Alarm B values can be changed, after the ALRBE bit has been set to 0 in RTC_CR.

It is cleared by hardware in initialization mode.

0: Alarm B update not allowed

1: Alarm B update allowed

Bit 0 **ALRAWF**: Alarm A write flag

This bit is set by hardware when Alarm A values can be changed, after the ALRAE bit has been set to 0 in RTC_CR.

It is cleared by hardware in initialization mode.

0: Alarm A update not allowed

1: Alarm A update allowed

Note: The bits ALRAF, ALRBF, WUTF and TSF are cleared 2 APB clock cycles after programming them to 0.

33.6.5 RTC prescaler register (RTC_PRER)

This register must be written in initialization mode only. The initialization must be performed in two separate write accesses. Refer to *Calendar initialization and configuration on page 926*.

This register is write protected. The write access procedure is described in *RTC register write protection on page 925*.

Address offset: 0x10

Backup domain reset value: 0x007F 00FF

System reset: not affected

31	30	29	28	27	26	25	24	23	22	21	20	19	18	17	16
Res.	Res.	Res.	Res.	Res.	Res.	Res.	Res.	Res.	PREDIV_A[6:0]						
									rw	rw	rw	rw	rw	rw	rw

15	14	13	12	11	10	9	8	7	6	5	4	3	2	1	0
Res.	PREDIV_S[14:0]														
	rw	rw	rw	rw	rw	rw	rw	rw	rw	rw	rw	rw	rw	rw	rw

Bits 31:23 Reserved, must be kept at reset value

Bits 22:16 **PREDIV_A[6:0]**: Asynchronous prescaler factor
This is the asynchronous division factor:
ck_apre frequency = RTCCLK frequency/(PREDIV_A+1)

Bit 15 Reserved, must be kept at reset value.

Bits 14:0 **PREDIV_S[14:0]**: Synchronous prescaler factor
This is the synchronous division factor:
ck_spre frequency = ck_apre frequency/(PREDIV_S+1)

33.6.6 RTC wakeup timer register (RTC_WUTR)

This register can be written only when WUTWF is set to 1 in RTC_ISR.

This register is write protected. The write access procedure is described in *RTC register write protection on page 925*.

Address offset: 0x14

Backup domain reset value: 0x0000 FFFF

System reset: not affected

31	30	29	28	27	26	25	24	23	22	21	20	19	18	17	16
Res.	Res.	Res.	Res.	Res.	Res.	Res.	Res.	Res.	Res.	Res.	Res.	Res.	Res.	Res.	Res.

15	14	13	12	11	10	9	8	7	6	5	4	3	2	1	0
WUT[15:0]															
rw	rw	rw	rw	rw	rw	rw	rw	rw	rw	rw	rw	rw	rw	rw	rw

Bits 31:16 Reserved, must be kept at reset value

Bits 15:0 **WUT[15:0]**: Wakeup auto-reload value bits

When the wakeup timer is enabled (WUTE set to 1), the WUTF flag is set every (WUT[15:0] + 1) ck_wut cycles. The ck_wut period is selected through WUCKSEL[2:0] bits of the RTC_CR register

When WUCKSEL[2] = 1, the wakeup timer becomes 17-bits and WUCKSEL[1] effectively becomes WUT[16] the most-significant bit to be reloaded into the timer.

The first assertion of WUTF occurs (WUT+1) ck_wut cycles after WUTE is set. Setting WUT[15:0] to 0x0000 with WUCKSEL[2:0] =011 (RTCCLK/2) is forbidden.

33.6.7 RTC alarm A register (RTC_ALRMAR)

This register can be written only when ALRAWF is set to 1 in RTC_ISR, or in initialization mode.

This register is write protected. The write access procedure is described in *RTC register write protection on page 925*.

Address offset: 0x1C

Backup domain reset value: 0x0000 0000

System reset: not affected

31	30	29	28	27	26	25	24	23	22	21	20	19	18	17	16
MSK4	WDSEL	DT[1:0]		DU[3:0]				MSK3	PM	HT[1:0]		HU[3:0]			
rw	rw	rw	rw	rw	rw	rw	rw	rw	rw	rw	rw	rw	rw	rw	rw
15	14	13	12	11	10	9	8	7	6	5	4	3	2	1	0
MSK2	MNT[2:0]			MNU[3:0]				MSK1	ST[2:0]			SU[3:0]			
rw	rw	rw	rw	rw	rw	rw	rw	rw	rw	rw	rw	rw	rw	rw	rw

Bit 31 **MSK4**: Alarm A date mask
0: Alarm A set if the date/day match
1: Date/day don't care in Alarm A comparison

Bit 30 **WDSEL**: Week day selection
0: DU[3:0] represents the date units
1: DU[3:0] represents the week day. DT[1:0] is don't care.

Bits 29:28 **DT[1:0]**: Date tens in BCD format.

Bits 27:24 **DU[3:0]**: Date units or day in BCD format.

Bit 23 **MSK3**: Alarm A hours mask
0: Alarm A set if the hours match
1: Hours don't care in Alarm A comparison

Bit 22 **PM:** AM/PM notation
0: AM or 24-hour format
1: PM

Bits 21:20 **HT[1:0]**: Hour tens in BCD format.

Bits 19:16 **HU[3:0]**: Hour units in BCD format.

Bit 15 **MSK2**: Alarm A minutes mask
0: Alarm A set if the minutes match
1: Minutes don't care in Alarm A comparison

Bits 14:12 **MNT[2:0]**: Minute tens in BCD format.

Bits 11:8 **MNU[3:0]**: Minute units in BCD format.

Bit 7 **MSK1**: Alarm A seconds mask
0: Alarm A set if the seconds match
1: Seconds don't care in Alarm A comparison

Bits 6:4 **ST[2:0]**: Second tens in BCD format.

Bits 3:0 **SU[3:0]**: Second units in BCD format.

33.6.8 RTC alarm B register (RTC_ALRMBR)

This register can be written only when ALRBWF is set to 1 in RTC_ISR, or in initialization mode.

This register is write protected. The write access procedure is described in *RTC register write protection on page 925*.

Address offset: 0x20

Backup domain reset value: 0x0000 0000

System reset: not affected

31	30	29	28	27	26	25	24	23	22	21	20	19	18	17	16
MSK4	WDSEL	DT[1:0]		DU[3:0]				MSK3	PM	HT[1:0]		HU[3:0]			
rw	rw	rw	rw	rw	rw	rw	rw	rw	rw	rw	rw	rw	rw	rw	rw
15	14	13	12	11	10	9	8	7	6	5	4	3	2	1	0
MSK2	MNT[2:0]			MNU[3:0]				MSK1	ST[2:0]			SU[3:0]			
rw	rw	rw	rw	rw	rw	rw	rw	rw	rw	rw	rw	rw	rw	rw	rw

Bit 31 **MSK4**: Alarm B date mask
0: Alarm B set if the date and day match
1: Date and day don’t care in Alarm B comparison

Bit 30 **WDSEL**: Week day selection
0: DU[3:0] represents the date units
1: DU[3:0] represents the week day. DT[1:0] is don’t care.

Bits 29:28 **DT[1:0]**: Date tens in BCD format

Bits 27:24 **DU[3:0]**: Date units or day in BCD format

Bit 23 **MSK3**: Alarm B hours mask
0: Alarm B set if the hours match
1: Hours don’t care in Alarm B comparison

Bit 22 **PM:** AM/PM notation
0: AM or 24-hour format
1: PM

Bits 21:20 **HT[1:0]**: Hour tens in BCD format

Bits 19:16 **HU[3:0]**: Hour units in BCD format

Bit 15 **MSK2**: Alarm B minutes mask
0: Alarm B set if the minutes match
1: Minutes don’t care in Alarm B comparison

Bits 14:12 **MNT[2:0]**: Minute tens in BCD format

Bits 11:8 **MNU[3:0]**: Minute units in BCD format

Bit 7 **MSK1**: Alarm B seconds mask
0: Alarm B set if the seconds match
1: Seconds don’t care in Alarm B comparison

Bits 6:4 **ST[2:0]**: Second tens in BCD format

Bits 3:0 **SU[3:0]**: Second units in BCD format

33.6.9 RTC write protection register (RTC_WPR)

Address offset: 0x24

Reset value: 0x0000 0000

31	30	29	28	27	26	25	24	23	22	21	20	19	18	17	16
Res.	Res.	Res.	Res.	Res.	Res.	Res.	Res.	Res.	Res.	Res.	Res.	Res.	Res.	Res.	Res.

15	14	13	12	11	10	9	8	7	6	5	4	3	2	1	0
Res.	Res.	Res.	Res.	Res.	Res.	Res.	Res.	KEY							
								w	w	w	w	w	w	w	w

Bits 31:8 Reserved, must be kept at reset value.

Bits 7:0 **KEY**: Write protection key

This byte is written by software.

Reading this byte always returns 0x00.

Refer to *RTC register write protection* for a description of how to unlock RTC register write protection.

33.6.10 RTC sub second register (RTC_SSR)

Address offset: 0x28

Backup domain reset value: 0x0000 0000

System reset: 0x0000 0000 when BYPSHAD = 0. Not affected when BYPSHAD = 1.

31	30	29	28	27	26	25	24	23	22	21	20	19	18	17	16
Res.	Res.	Res.	Res.	Res.	Res.	Res.	Res.	Res.	Res.	Res.	Res.	Res.	Res.	Res.	Res.

15	14	13	12	11	10	9	8	7	6	5	4	3	2	1	0
SS[15:0]															
r	r	r	r	r	r	r	r	r	r	r	r	r	r	r	r

Bits31:16 Reserved, must be kept at reset value

Bits 15:0 **SS**: Sub second value

SS[15:0] is the value in the synchronous prescaler counter. The fraction of a second is given by the formula below:

Second fraction = (PREDIV_S - SS) / (PREDIV_S + 1)

Note: SS can be larger than PREDIV_S only after a shift operation. In that case, the correct time/date is one second less than as indicated by RTC_TR/RTC_DR.

33.6.11 RTC shift control register (RTC_SHIFTR)

This register is write protected. The write access procedure is described in *RTC register write protection on page 925.*

Address offset: 0x2C

Backup domain reset value: 0x0000 0000

System reset: not affected

31	30	29	28	27	26	25	24	23	22	21	20	19	18	17	16
ADD1S	Res.	Res.	Res.	Res.	Res.	Res.	Res.	Res.	Res.	Res.	Res.	Res.	Res.	Res.	Res.
w															

15	14	13	12	11	10	9	8	7	6	5	4	3	2	1	0
Res.	SUBFS[14:0]														
	w	w	w	w	w	w	w	w	w	w	w	w	w	w	w

Bit 31 **ADD1S**: Add one second

0: No effect

1: Add one second to the clock/calendar

This bit is write only and is always read as zero. Writing to this bit has no effect when a shift operation is pending (when SHPF=1, in RTC_ISR).

This function is intended to be used with SUBFS (see description below) in order to effectively add a fraction of a second to the clock in an atomic operation.

Bits 30:15 Reserved, must be kept at reset value

Bits 14:0 **SUBFS**: Subtract a fraction of a second

These bits are write only and is always read as zero. Writing to this bit has no effect when a shift operation is pending (when SHPF=1, in RTC_ISR).

The value which is written to SUBFS is added to the synchronous prescaler counter. Since this counter counts down, this operation effectively subtracts from (delays) the clock by:

Delay (seconds) = SUBFS / (PREDIV_S + 1)

A fraction of a second can effectively be added to the clock (advancing the clock) when the ADD1S function is used in conjunction with SUBFS, effectively advancing the clock by:

Advance (seconds) = (1 - (SUBFS / (PREDIV_S + 1))).

Note: Writing to SUBFS causes RSF to be cleared. Software can then wait until RSF=1 to be sure that the shadow registers have been updated with the shifted time.

33.6.12 RTC timestamp time register (RTC_TSTR)

The content of this register is valid only when TSF is set to 1 in RTC_ISR. It is cleared when TSF bit is reset.

Address offset: 0x30

Backup domain reset value: 0x0000 0000

System reset: not affected

31	30	29	28	27	26	25	24	23	22	21	20	19	18	17	16
Res.	Res.	Res.	Res.	Res.	Res.	Res.	Res.	Res.	PM	HT[1:0]		HU[3:0]			
									r	r	r	r	r	r	r

15	14	13	12	11	10	9	8	7	6	5	4	3	2	1	0
Res.	MNT[2:0]			MNU[3:0]				Res.	ST[2:0]			SU[3:0]			
	r	r	r	r	r	r	r		r	r	r	r	r	r	r

Bits 31:23 Reserved, must be kept at reset value

Bit 22 **PM:** AM/PM notation
0: AM or 24-hour format
1: PM

Bits 21:20 **HT[1:0]**: Hour tens in BCD format.

Bits 19:16 **HU[3:0]**: Hour units in BCD format.

Bit 15 Reserved, must be kept at reset value

Bits 14:12 **MNT[2:0]**: Minute tens in BCD format.

Bits 11:8 **MNU[3:0]**: Minute units in BCD format.

Bit 7 Reserved, must be kept at reset value

Bits 6:4 **ST[2:0]**: Second tens in BCD format.

Bits 3:0 **SU[3:0]**: Second units in BCD format.

33.6.13 RTC timestamp date register (RTC_TSDR)

The content of this register is valid only when TSF is set to 1 in RTC_ISR. It is cleared when TSF bit is reset.

Address offset: 0x34

Backup domain reset value: 0x0000 0000

System reset: not affected

31	30	29	28	27	26	25	24	23	22	21	20	19	18	17	16
Res.	Res.	Res.	Res.	Res.	Res.	Res.	Res.	Res.	Res.	Res.	Res.	Res.	Res.	Res.	Res.

15	14	13	12	11	10	9	8	7	6	5	4	3	2	1	0
WDU[1:0]			MT	MU[3:0]				Res.	Res.	DT[1:0]		DU[3:0]			
r	r	r	r	r	r	r	r			r	r	r	r	r	r

Bits 31:16 Reserved, must be kept at reset value

Bits 15:13 **WDU[1:0]**: Week day units

Bit 12 **MT**: Month tens in BCD format

Bits 11:8 **MU[3:0]**: Month units in BCD format

Bits 7:6 Reserved, must be kept at reset value

Bits 5:4 **DT[1:0]**: Date tens in BCD format

Bits 3:0 **DU[3:0]**: Date units in BCD format

33.6.14 RTC time-stamp sub second register (RTC_TSSSR)

The content of this register is valid only when RTC_ISR/TSF is set. It is cleared when the RTC_ISR/TSF bit is reset.

Address offset: 0x38

Backup domain reset value: 0x0000 0000

System reset: not affected

31	30	29	28	27	26	25	24	23	22	21	20	19	18	17	16
Res.	Res.	Res.	Res.	Res.	Res.	Res.	Res.	Res.	Res.	Res.	Res.	Res.	Res.	Res.	Res.

15	14	13	12	11	10	9	8	7	6	5	4	3	2	1	0
SS[15:0]															
r	r	r	r	r	r	r	r	r	r	r	r	r	r	r	r

Bits 31:16 Reserved, must be kept at reset value

Bits 15:0 **SS**: Sub second value

SS[15:0] is the value of the synchronous prescaler counter when the timestamp event occurred.

33.6.15 RTC calibration register (RTC_CALR)

This register is write protected. The write access procedure is described in *RTC register write protection on page 925*.

Address offset: 0x3C

Backup domain reset value: 0x0000 0000

System reset: not affected

31	30	29	28	27	26	25	24	23	22	21	20	19	18	17	16
Res.	Res.	Res.	Res.	Res.	Res.	Res.	Res.	Res.	Res.	Res.	Res.	Res.	Res.	Res.	Res.

15	14	13	12	11	10	9	8	7	6	5	4	3	2	1	0
CALP	CALW8	CALW 16	Res.	Res.	Res.	Res.	CALM[8:0]								
rw	rw	rw					rw	rw	rw	rw	rw	rw	rw	rw	rw

Bits 31:16 Reserved, must be kept at reset value

Bit 15 **CALP**: Increase frequency of RTC by 488.5 ppm

0: No RTCCLK pulses are added.

1: One RTCCLK pulse is effectively inserted every 2^{11} pulses (frequency increased by 488.5 ppm).

This feature is intended to be used in conjunction with CALM, which lowers the frequency of the calendar with a fine resolution. if the input frequency is 32768 Hz, the number of RTCCLK pulses added during a 32-second window is calculated as follows: (512 * CALP) - CALM.

Refer to *Section 33.3.12: RTC smooth digital calibration*.

Bit 14 **CALW8:** Use an 8-second calibration cycle period

When CALW8 is set to ‘1’, the 8-second calibration cycle period is selected.

Note: CALM[1:0] are stuck at “00” when CALW8=’1’. Refer to Section 33.3.12: RTC smooth digital calibration.

Bit 13 **CALW16:** Use a 16-second calibration cycle period

When CALW16 is set to ‘1’, the 16-second calibration cycle period is selected.This bit must not be set to ‘1’ if CALW8=1.

Note: CALM[0] is stuck at ‘0’ when CALW16=’1’. Refer to Section 33.3.12: RTC smooth digital calibration.

Bits 12:9 Reserved, must be kept at reset value

Bits 8:0 **CALM[8:0]**: Calibration minus

The frequency of the calendar is reduced by masking CALM out of 2^{20} RTCCLK pulses (32 seconds if the input frequency is 32768 Hz). This decreases the frequency of the calendar with a resolution of 0.9537 ppm.

To increase the frequency of the calendar, this feature should be used in conjunction with CALP. See *Section 33.3.12: RTC smooth digital calibration on page 930*.

33.6.16 RTC tamper configuration register (RTC_TAMPCR)

Address offset: 0x40

Backup domain reset value: 0x0000 0000

System reset: not affected

31	30	29	28	27	26	25	24	23	22	21	20	19	18	17	16
Res.	Res.	Res.	Res.	Res.	Res.	Res.	TAMP3 MF	TAMP3 NO ERASE	TAMP3 IE	TAMP2 MF	TAMP2 NO ERASE	TAMP2 IE	TAMP1 MF	TAMP1 NO ERASE	TAMP1 IE
							rw	rw	rw	rw	rw	rw	rw	rw	rw

15	14	13	12	11	10	9	8	7	6	5	4	3	2	1	0
TAMP PUDIS	TAMPPRCH [1:0]		TAMPFLT[1:0]		TAMPFREQ[2:0]			TAMP TS	TAMP3 TRG	TAMP3 E	TAMP2 TRG	TAMP2 E	TAMPI E	TAMP1 TRG	TAMP1 E
rw	rw	rw	rw	rw	rw	rw	rw	rw	rw	rw	rw	rw	rw	rw	rw

Bits 31:25 Reserved, must be kept at reset value.

Bit 24 **TAMP3MF**: Tamper 3 mask flag

0: Tamper 3 event generates a trigger event and TAMP3F must be cleared by software to allow next tamper event detection.

1: Tamper 3 event generates a trigger event. TAMP3F is masked and internally cleared by hardware. The backup registers are not erased.

Note: The Tamper 3 interrupt must not be enabled when TAMP3MF is set.

Bit 23 **TAMP3NOERASE**: Tamper 3 no erase

0: Tamper 3 event erases the backup registers.

1: Tamper 3 event does not erase the backup registers.

Bit 22 **TAMP3IE**: Tamper 3 interrupt enable

0: Tamper 3 interrupt is disabled if TAMPIE = 0.

1: Tamper 3 interrupt enabled.

Bit 21 **TAMP2MF**: Tamper 2 mask flag

0: Tamper 2 event generates a trigger event and TAMP2F must be cleared by software to allow next tamper event detection.

1: Tamper 2 event generates a trigger event. TAMP2F is masked and internally cleared by hardware. The backup registers are not erased.

Note: The Tamper 2 interrupt must not be enabled when TAMP2MF is set.

Bit 20 **TAMP2NOERASE**: Tamper 2 no erase

0: Tamper 2 event erases the backup registers.

1: Tamper 2 event does not erase the backup registers.

Bit 19 **TAMP2IE**: Tamper 2 interrupt enable

0: Tamper 2 interrupt is disabled if TAMPIE = 0.

1: Tamper 2 interrupt enabled.

Bit 18 **TAMP1MF**: Tamper 1 mask flag

0: Tamper 1 event generates a trigger event and TAMP1F must be cleared by software to allow next tamper event detection.

1: Tamper 1 event generates a trigger event. TAMP1F is masked and internally cleared by hardware.The backup registers are not erased.

Note: The Tamper 1 interrupt must not be enabled when TAMP1MF is set.

Bit 17 **TAMP1NOERASE**: Tamper 1 no erase

0: Tamper 1 event erases the backup registers.

1: Tamper 1 event does not erase the backup registers.

Bit 16 **TAMP1IE**: Tamper 1 interrupt enable

0: Tamper 1 interrupt is disabled if TAMPIE = 0.

1: Tamper 1 interrupt enabled.

Bit 15 **TAMPPUDIS**: RTC_TAMPx pull-up disable

This bit determines if each of the RTC_TAMPx pins are precharged before each sample.

0: Precharge RTC_TAMPx pins before sampling (enable internal pull-up)

1: Disable precharge of RTC_TAMPx pins.

Bits 14:13 **TAMPPRCH[1:0]**: RTC_TAMPx precharge duration

These bit determines the duration of time during which the pull-up/is activated before each sample. TAMPPRCH is valid for each of the RTC_TAMPx inputs.

0x0: 1 RTCCLK cycle

0x1: 2 RTCCLK cycles

0x2: 4 RTCCLK cycles

0x3: 8 RTCCLK cycles

Bits 12:11 **TAMPFLT[1:0]**: RTC_TAMPx filter count

These bits determines the number of consecutive samples at the specified level (TAMP*TRG) needed to activate a Tamper event. TAMPFLT is valid for each of the RTC_TAMPx inputs.

0x0: Tamper event is activated on edge of RTC_TAMPx input transitions to the active level (no internal pull-up on RTC_TAMPx input).

0x1: Tamper event is activated after 2 consecutive samples at the active level.

0x2: Tamper event is activated after 4 consecutive samples at the active level.

0x3: Tamper event is activated after 8 consecutive samples at the active level.

Bits 10:8 **TAMPFREQ[2:0]**: Tamper sampling frequency

Determines the frequency at which each of the RTC_TAMPx inputs are sampled.

0x0: RTCCLK / 32768 (1 Hz when RTCCLK = 32768 Hz)

0x1: RTCCLK / 16384 (2 Hz when RTCCLK = 32768 Hz)

0x2: RTCCLK / 8192 (4 Hz when RTCCLK = 32768 Hz)

0x3: RTCCLK / 4096 (8 Hz when RTCCLK = 32768 Hz)

0x4: RTCCLK / 2048 (16 Hz when RTCCLK = 32768 Hz)

0x5: RTCCLK / 1024 (32 Hz when RTCCLK = 32768 Hz)

0x6: RTCCLK / 512 (64 Hz when RTCCLK = 32768 Hz)

0x7: RTCCLK / 256 (128 Hz when RTCCLK = 32768 Hz)

Bit 7 **TAMPTS**: Activate timestamp on tamper detection event

0: Tamper detection event does not cause a timestamp to be saved

1: Save timestamp on tamper detection event

TAMPTS is valid even if TSE=0 in the RTC_CR register.

Bit 6 **TAMP3TRG**: Active level for RTC_TAMP3 input

if TAMPFLT ≠ 00:

0: RTC_TAMP3 input staying low triggers a tamper detection event.

1: RTC_TAMP3 input staying high triggers a tamper detection event.

if TAMPFLT = 00:

0: RTC_TAMP3 input rising edge triggers a tamper detection event.

1: RTC_TAMP3 input falling edge triggers a tamper detection event.

Bit 5 **TAMP3E**: RTC_TAMP3 detection enable
0: RTC_TAMP3 input detection disabled
1: RTC_TAMP3 input detection enabled

Bit 4 **TAMP2TRG**: Active level for RTC_TAMP2 input
if TAMPFLT != 00:
0: RTC_TAMP2 input staying low triggers a tamper detection event.
1: RTC_TAMP2 input staying high triggers a tamper detection event.
if TAMPFLT = 00:
0: RTC_TAMP2 input rising edge triggers a tamper detection event.
1: RTC_TAMP2 input falling edge triggers a tamper detection event.

Bit 3 **TAMP2E**: RTC_TAMP2 input detection enable
0: RTC_TAMP2 detection disabled
1: RTC_TAMP2 detection enabled

Bit 2 **TAMPIE**: Tamper interrupt enable
0: Tamper interrupt disabled
1: Tamper interrupt enabled.

Note: This bit enables the interrupt for all tamper pins events, whatever TAMPxIE level. If this bit is cleared, each tamper event interrupt can be individually enabled by setting TAMPxIE.

Bit 1 **TAMP1TRG**: Active level for RTC_TAMP1 input
If TAMPFLT != 00
0: RTC_TAMP1 input staying low triggers a tamper detection event.
1: RTC_TAMP1 input staying high triggers a tamper detection event.
if TAMPFLT = 00:
0: RTC_TAMP1 input rising edge triggers a tamper detection event.
1: RTC_TAMP1 input falling edge triggers a tamper detection event.

Bit 0 **TAMP1E**: RTC_TAMP1 input detection enable
0: RTC_TAMP1 detection disabled
1: RTC_TAMP1 detection enabled

Caution: When TAMPFLT = 0, TAMPxE must be reset when TAMPxTRG is changed to avoid spuriously setting TAMPxF.

33.6.17 RTC alarm A sub second register (RTC_ALRMASSR)

This register can be written only when ALRAE is reset in RTC_CR register, or in initialization mode.

This register is write protected. The write access procedure is described in *RTC register write protection on page 925*

Address offset: 0x44

Backup domain reset value: 0x0000 0000

System reset: not affected

31	30	29	28	27	26	25	24	23	22	21	20	19	18	17	16
Res.	Res.	Res.	Res.	MASKSS[3:0]				Res.	Res.	Res.	Res.	Res.	Res.	Res.	Res.
				rw	rw	rw	rw								

15	14	13	12	11	10	9	8	7	6	5	4	3	2	1	0
Res.	SS[14:0]														
	rw	rw	rw	rw	rw	rw	rw	rw	rw	rw	rw	rw	w	rw	rw

Bits 31:28 Reserved, must be kept at reset value.

Bits 27:24 MASKSS[3:0]: Mask the most-significant bits starting at this bit

0: No comparison on sub seconds for Alarm A. The alarm is set when the seconds unit is incremented (assuming that the rest of the fields match).
1: SS[14:1] are don't care in Alarm A comparison. Only SS[0] is compared.
2: SS[14:2] are don't care in Alarm A comparison. Only SS[1:0] are compared.
3: SS[14:3] are don't care in Alarm A comparison. Only SS[2:0] are compared.
...
12: SS[14:12] are don't care in Alarm A comparison. SS[11:0] are compared.
13: SS[14:13] are don't care in Alarm A comparison. SS[12:0] are compared.
14: SS[14] is don't care in Alarm A comparison. SS[13:0] are compared.
15: All 15 SS bits are compared and must match to activate alarm.
The overflow bits of the synchronous counter (bits 15) is never compared. This bit can be different from 0 only after a shift operation.

Bits23:15 Reserved, must be kept at reset value.

Bits 14:0 SS[14:0]: Sub seconds value

This value is compared with the contents of the synchronous prescaler counter to determine if Alarm A is to be activated. Only bits 0 up MASKSS-1 are compared.

33.6.18 RTC alarm B sub second register (RTC_ALRMBSSR)

This register can be written only when ALRBE is reset in RTC_CR register, or in initialization mode.

This register is write protected.The write access procedure is described in *Section : RTC register write protection*.

Address offset: 0x48

Backup domain reset value: 0x0000 0000

System reset: not affected

31	30	29	28	27	26	25	24	23	22	21	20	19	18	17	16
Res.	Res.	Res.	Res.	MASKSS[3:0]				Res.	Res.	Res.	Res.	Res.	Res.	Res.	Res.
				rw	rw	rw	rw								

15	14	13	12	11	10	9	8	7	6	5	4	3	2	1	0
Res.	SS[14:0]														
	rw	rw	rw	rw	rw	rw	rw	rw	rw	rw	rw	rw	w	rw	rw

Bits 31:28 Reserved, must be kept at reset value.

Bits 27:24 **MASKSS[3:0]**: Mask the most-significant bits starting at this bit

0x0: No comparison on sub seconds for Alarm B. The alarm is set when the seconds unit is incremented (assuming that the rest of the fields match).
0x1: SS[14:1] are don't care in Alarm B comparison. Only SS[0] is compared.
0x2: SS[14:2] are don't care in Alarm B comparison. Only SS[1:0] are compared.
0x3: SS[14:3] are don't care in Alarm B comparison. Only SS[2:0] are compared.
...
0xC: SS[14:12] are don't care in Alarm B comparison. SS[11:0] are compared.
0xD: SS[14:13] are don't care in Alarm B comparison. SS[12:0] are compared.
0xE: SS[14] is don't care in Alarm B comparison. SS[13:0] are compared.
0xF: All 15 SS bits are compared and must match to activate alarm.
The overflow bits of the synchronous counter (bits 15) is never compared. This bit can be different from 0 only after a shift operation.

Bits 23:15 Reserved, must be kept at reset value.

Bits 14:0 **SS[14:0]**: Sub seconds value

This value is compared with the contents of the synchronous prescaler counter to determine if Alarm B is to be activated. Only bits 0 up to MASKSS-1 are compared.

33.6.19 RTC option register (RTC_OR)

Address offset: 0x4C

Backup domain reset value: 0x0000 0000

System reset: not affected

31	30	29	28	27	26	25	24	23	22	21	20	19	18	17	16
Res.	Res.	Res.	Res.	Res.	Res.	Res.	Res.	Res.	Res.	Res.	Res.	Res.	Res.	Res.	Res.

15	14	13	12	11	10	9	8	7	6	5	4	3	2	1	0
Res.	Res.	Res.	Res.	Res.	Res.	Res.	Res.	Res.	Res.	Res.	Res.	Res.	Res.	RTC_ OUT_ RMP	RTC_ ALARM _TYPE
														rw	rw

Bits 31:2 Reserved, must be kept at reset value.

Bit 1 **RTC_OUT_RMP**: RTC_OUT remap

Setting this bit allows to remap the RTC outputs on PB2 as follows:

RTC_OUT_RMP = ‘0’:

If OSEL/= ‘00’: RTC_ALARM is output on PC13

If OSEL= ‘00’ and COE = ‘1’: RTC_CALIB is output on PC13

RTC_OUT_RMP = ‘1’:

If OSEL /= ‘00’ and COE = ‘0’: RTC_ALARM is output on PB2

If OSEL = ‘00’ and COE = ‘1’: RTC_CALIB is output on PB2

If OSEL /= ‘00’ and COE = ‘1’: RTC_CALIB is output on PB2 and RTC_ALARM is output on PC13.

Bit 0 **RTC_ALARM_TYPE**: RTC_ALARM output type on PC13

This bit is set and cleared by software

0: RTC_ALARM, when mapped on PC13, is open-drain output

1: RTC_ALARM, when mapped on PC13, is push-pull output

33.6.20 RTC backup registers (RTC_BKPxR)

Address offset: 0x50 to 0xCC

Backup domain reset value: 0x0000 0000

System reset: not affected

31	30	29	28	27	26	25	24	23	22	21	20	19	18	17	16
BKP[31:16]															
rw	rw	rw	rw	rw	rw	rw	rw	rw	rw	rw	rw	rw	rw	rw	rw

15	14	13	12	11	10	9	8	7	6	5	4	3	2	1	0
BKP[15:0]															
rw	rw	rw	rw	rw	rw	rw	rw	rw	rw	rw	rw	rw	w	rw	rw

Bits 31:0 BKP[31:0]

The application can write or read data to and from these registers.

They are powered-on by V_{BAT} when V_{DD} is switched off, so that they are not reset by System reset, and their contents remain valid when the device operates in low-power mode.

This register is reset on a tamper detection event, as long as TAMPxF=1. or when the Flash readout protection is disabled.

33.6.21 RTC register map

Table 137. RTC register map and reset values

Offset	Register	31	30	29	28	27	26	25	24	23	22	21	20	19	18	17	16	15	14	13	12	11	10	9	8	7	6	5	4	3	2	1	0
0x00	**RTC_TR**	Res.	Res.	Res.	Res.	Res.	Res.	Res.	Res.	Res.	PM	HT [1:0]		HU[3:0]				Res.	MNT[2:0]			MNU[3:0]				Res.	ST[2:0]			SU[3:0]			
	Reset value										0	0	0	0	0	0	0		0	0	0	0	0	0	0		0	0	0	0	0	0	0
0x04	**RTC_DR**	Res.	Res.	Res.	Res.	Res.	Res.	Res.	Res.	YT[3:0]				YU[3:0]				WDU[2:0]			MT	MU[3:0]				Res.	Res.	DT [1:0]		DU[3:0]			
	Reset value									0	0	0	0	0	0	0	0	0	0	1	0	0	0	0	1			0	0	0	0	0	1
0x08	**RTC_CR**	Res.	Res.	Res.	Res.	Res.	Res.	Res.	ITSE	COE	OSEL [1:0]		POL	COSEL	BKP	SUB1H	ADD1H	TSIE	WUTIE	ALRBIE	ALRAIE	TSE	WUTE	ALRBE	ALRAE	Res.	FMT	BYPSHAD	REFCKON	TSEDGE	WUCKSEL[2:0]		
	Reset value								0	0	0	0	0		0	0	0	0	0	0	0	0	0	0	0		0	0	0	0	0	0	0
0x0C	**RTC_ISR**	Res.	Res.	Res.	Res.	Res.	Res.	Res.	Res.	Res.	Res.	Res.	Res.	Res.	Res.	ITSF	RECALPF	TAMP3F	TAMP2F	TAMP1F	TSOVF	TSF	WUTF	ALRBF	ALRAF	INIT	INITF	RSF	INITS	SHPF	WUTWF	ALRBWF	ALRAWF
	Reset value															0	0		0	0	0	0	0	0	0	0	0	0	0	0	1	1	1
0x10	**RTC_PRER**	Res.	Res.	Res.	Res.	Res.	Res.	Res.	Res.	Res.	PREDIV_A[6:0]							PREDIV_S[14:0]															
	Reset value										1	1	1	1	1	1	1	0	0	0	0	0	0	0	0	1	1	1	1	1	1	1	1
0x14	**RTC_WUTR**	Res.	Res.	Res.	Res.	Res.	Res.	Res.	Res.	Res.	Res.	Res.	Res.	Res.	Res.	Res.	Res.	WUT[15:0]															
	Reset value																	1	1	1	1	1	1	1	1	1	1	1	1	1	1	1	1
0x1C	**RTC_ALRMAR**	MSK4	WDSEL	DT [1:0]		DU[3:0]				MSK3	PM	HT [1:0]		HU[3:0]				MSK2	MNT[2:0]			MNU[3:0]				MSK1	ST[2:0]			SU[3:0]			
	Reset value	0	0	0	0	0	0	0	0	0	0	0	0	0	0	0	0	0	0	0	0	0	0	0	0	0	0	0	0	0	0	0	0
0x20	**RTC_ALRMBR**	MSK4	WDSEL	DT [1:0]		DU[3:0]				MSK3	PM	HT [1:0]		HU[3:0]				MSK2	MNT[2:0]			MNU[3:0]				MSK2	ST[2:0]			SU[3:0]			
	Reset value	0	0	0	0	0	0	0	0	0	0	0	0	0	0	0	0	0	0	0	0	0	0	0	0	0	0	0	0	0	0	0	0
0x24	**RTC_WPR**	Res.	Res.	Res.	Res.	Res.	Res.	Res.	Res.	Res.	Res.	Res.	Res.	Res.	Res.	Res.	Res.	Res.	Res.	Res.	Res.	Res.	Res.	Res.	Res.	KEY							
	Reset value																									0	0	0	0	0	0	0	0
0x28	**RTC_SSR**	Res.	Res.	Res.	Res.	Res.	Res.	Res.	Res.	Res.	Res.	Res.	Res.	Res.	Res.	Res.	Res.	SS[15:0]															
	Reset value																	0	0	0	0	0	0	0	0	0	0	0	0	0	0	0	0
0x2C	**RTC_SHIFTR**	ADD1S	Res.	Res.	Res.	Res.	Res.	Res.	Res.	Res.	Res.	Res.	Res.	Res.	Res.	Res.	Res.	Res.	SUBFS[14:0]														
	Reset value	0																	0	0	0	0	0	0	0	0	0	0	0	0	0	0	0

Table 137. RTC register map and reset values (continued)

Offset	Register	31	30	29	28	27	26	25	24	23	22	21	20	19	18	17	16	15	14	13	12	11	10	9	8	7	6	5	4	3	2	1	0
0x30	**RTC_TSTR**	Res.	Res.	Res.	Res.	Res.	Res.	Res.	Res.	Res.	PM	HT[1:0]		HU[3:0]				Res.	MNT[2:0]			MNU[3:0]				Res.	ST[2:0]			SU[3:0]			
	Reset value										0	0	0	0	0	0	0		0	0	0	0	0	0	0		0	0	0	0	0	0	0
0x34	**RTC_TSDR**	Res.	Res.	Res.	Res.	Res.	Res.	Res.	Res.	Res.	Res.	Res.	Res.	Res.	Res.	Res.	Res.	WDU[1:0]			MT	MU[3:0]				Res.	Res.	DT [1:0]		DU[3:0]			
	Reset value																	0	0	0	0	0	0	0	0			0	0	0	0	0	0
0x38	**RTC_TSSSR**	Res.	Res.	Res.	Res.	Res.	Res.	Res.	Res.	Res.	Res.	Res.	Res.	Res.	Res.	Res.	Res.	SS[15:0]															
	Reset value																	0	0	0	0	0	0	0	0	0	0	0	0	0	0	0	0
0x3C	**RTC_ CALR**	Res.	Res.	Res.	Res.	Res.	Res.	Res.	Res.	Res.	Res.	Res.	Res.	Res.	Res.	Res.	Res.	CALP	CALW8	CALW16	Res.	Res.	Res.	Res.	CALM[8:0]								
	Reset value																	0	0	0					0	0	0	0	0	0	0	0	0
0x40	**RTC_TAMPCR**	Res.	Res.	Res.	Res.	Res.	Res.	Res.	TAMP3MF	TAMP3NOERASE	TAMP3IE	TAMP2MF	TAMP2NOERASE	TAMP2IE	TAMP1MF	TAMP1NOERASE	TAMP1IE	TAMPPUDIS	TAMPPRCH[1:0]		TAMPFLT[1:0]		TAMPFREQ[2:0]			TAMPTS	TAMP3TRG	TAMP3E	TAMP2TRG	TAMP2E	TAMPIE	TAMP1TRG	TAMP1E
	Reset value								0	0	0	0	0	0	0	0	0	0	0	0	0	0	0	0	0	0	0	0	0	0	0	0	0
0x44	**RTC_ ALRMASSR**	Res.	Res.	Res.	Res.	MASKSS [3:0]				Res.	Res.	Res.	Res.	Res.	Res.	Res.	Res.	Res.	SS[14:0]														
	Reset value					0	0	0	0										0	0	0	0	0	0	0	0	0	0	0	0	0	0	0
0x48	**RTC_ ALRMBSSR**	Res.	Res.	Res.	Res.	MASKSS [3:0]				Res.	Res.	Res.	Res.	Res.	Res.	Res.	Res.	Res.	SS[14:0]														
	Reset value					0	0	0	0										0	0	0	0	0	0	0	0	0	0	0	0	0	0	0
0x4C	**RTC_ OR**	Res.	Res.	Res.	Res.	Res.	Res.	Res.	Res.	Res.	Res.	Res.	Res.	Res.	Res.	Res.	Res.	Res.	Res.	Res.	Res.	Res.	Res.	Res.	Res.	Res.	Res.	Res.	Res.	Res.	Res.	RTC_OUT_RMP	RTC_ALARM_TYPE
	Reset value																															0	0
0x50 to 0xCC	**RTC_BKP0R**	BKP[31:0]																															
	Reset value	0	0	0	0	0	0	0	0	0	0	0	0	0	0	0	0	0	0	0	0	0	0	0	0	0	0	0	0	0	0	0	0
	to **RTC_BKP31R**	BKP[31:0]																															
	Reset value	0	0	0	0	0	0	0	0	0	0	0	0	0	0	0	0	0	0	0	0	0	0	0	0	0	0	0	0	0	0	0	0

Refer to *Section 2.2.2 on page 62* for the register boundary addresses.

34 Inter-integrated circuit (I2C) interface

34.1 Introduction

The I^2C (inter-integrated circuit) bus interface handles communications between the microcontroller and the serial I^2C bus. It provides multimaster capability, and controls all I^2C bus-specific sequencing, protocol, arbitration and timing. It supports Standard-mode (Sm), Fast-mode (Fm) and Fast-mode Plus (Fm+).

It is also SMBus (system management bus) and PMBus (power management bus) compatible.

DMA can be used to reduce CPU overload.

34.2 I2C main features

- I^2C bus specification rev03 compatibility:
  - Slave and master modes
  - Multimaster capability
  - Standard-mode (up to 100 kHz)
  - Fast-mode (up to 400 kHz)
  - Fast-mode Plus (up to 1 MHz)
  - 7-bit and 10-bit addressing mode
  - Multiple 7-bit slave addresses (2 addresses, 1 with configurable mask)
  - All 7-bit addresses acknowledge mode
  - General call
  - Programmable setup and hold times
  - Easy to use event management
  - Optional clock stretching
  - Software reset
- 1-byte buffer with DMA capability
- Programmable analog and digital noise filters

The following additional features are also available depending on the product implementation (see *Section 34.3: I2C implementation*):

- SMBus specification rev 2.0 compatibility:
  - Hardware PEC (Packet Error Checking) generation and verification with ACK control
  - Command and data acknowledge control
  - Address resolution protocol (ARP) support
  - Host and Device support
  - SMBus alert
  - Timeouts and idle condition detection
- PMBus rev 1.1 standard compatibility
- Independent clock: a choice of independent clock sources allowing the I2C communication speed to be independent from the PCLK reprogramming
- Wakeup from Stop mode on address match.

34.3 I2C implementation

This manual describes the full set of features implemented in I2C peripheral. In the STM32L431/433/443 devices I2C1, I2C2 and I2C3 implement the full set of features as shown in the following table, with the restriction than only I2C3 can wake up from Stop 2 mode.

Table 138. STM32L431/433/443 I2C implementation

I2C features(1)	I2C1	I2C2	I2C3
7-bit addressing mode	X	X	X
10-bit addressing mode	X	X	X
Standard-mode (up to 100 kbit/s)	X	X	X
Fast-mode (up to 400 kbit/s)	X	X	X
Fast-mode Plus with 20mA output drive I/Os (up to 1 Mbit/s)	X	X	X
Independent clock	X	X	X
SMBus	X	X	X
Wakeup from Stop 0 mode	X	X	X
Wakeup from Stop 1 mode	X	X	X
Wakeup from Stop 2 mode	-	-	X

1. X = supported.

34.4 I2C functional description

In addition to receiving and transmitting data, this interface converts it from serial to parallel format and vice versa. The interrupts are enabled or disabled by software. The interface is connected to the I^2C bus by a data pin (SDA) and by a clock pin (SCL). It can be connected with a standard (up to 100 kHz), Fast-mode (up to 400 kHz) or Fast-mode Plus (up to 1 MHz) I^2C bus.

This interface can also be connected to a SMBus with the data pin (SDA) and clock pin (SCL).

If SMBus feature is supported: the additional optional SMBus Alert pin (SMBA) is also available.

34.4.1 I2C block diagram

The block diagram of the I2C interface is shown in *Figure 326*.

Figure 326. I2C block diagram

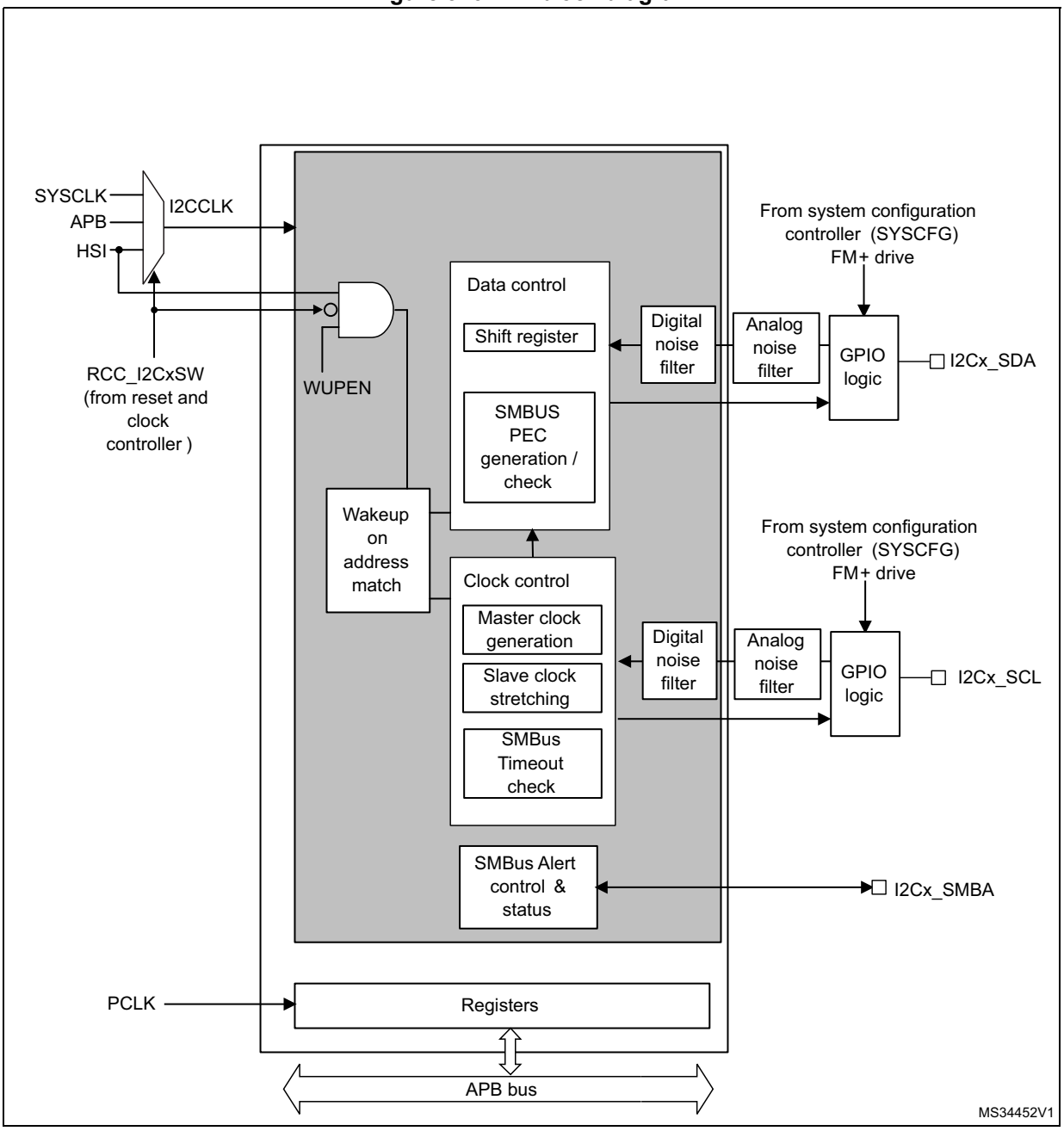

The I2C is clocked by an independent clock source which allows to the I2C to operate independently from the PCLK frequency.

This independent clock source can be selected for either of the following three clock sources:

- PCLK1: APB1 clock (default value)
- HSI16: internal 16 MHz RC oscillator
- SYSCLK: system clock

Refer to *Section 6: Reset and clock control (RCC)* for more details.

I2C I/Os support 20 mA output current drive for Fast-mode Plus operation. This is enabled by setting the driving capability control bits for SCL and SDA in *Section 9.2.2: SYSCFG configuration register 1 (SYSCFG_CFGR1)*.

34.4.2 I2C clock requirements

The I2C kernel is clocked by I2CCLK.

The I2CCLK period t_{I2CCLK} must respect the following conditions:

$t_{I2CCLK} < (tLOW - tfilters) / 4$ and $t_{I2CCLK} < tHIGH$

with:

t_{LOW}: SCL low time and tHIGH : SCL high time

$t_{filters}$: when enabled, sum of the delays brought by the analog filter and by the digital filter.

Analog filter delay is maximum 260 ns. Digital filter delay is DNF x t_{I2CCLK}.

The PCLK clock period t_{PCLK} must respect the following condition:

$t_{PCLK} < 4/3\ tSCL$

with t_{SCL}: SCL period

Caution: When the I2C kernel is clocked by PCLK. PCLK must respect the conditions for t_{I2CCLK}.

34.4.3 Mode selection

The interface can operate in one of the four following modes:

- Slave transmitter
- Slave receiver
- Master transmitter
- Master receiver

By default, it operates in slave mode. The interface automatically switches from slave to master when it generates a START condition, and from master to slave if an arbitration loss or a STOP generation occurs, allowing multimaster capability.

Communication flow

In Master mode, the I2C interface initiates a data transfer and generates the clock signal. A serial data transfer always begins with a START condition and ends with a STOP condition. Both START and STOP conditions are generated in master mode by software.

In Slave mode, the interface is capable of recognizing its own addresses (7 or 10-bit), and the General Call address. The General Call address detection can be enabled or disabled by software. The reserved SMBus addresses can also be enabled by software.

Data and addresses are transferred as 8-bit bytes, MSB first. The first byte(s) following the START condition contain the address (one in 7-bit mode, two in 10-bit mode). The address is always transmitted in Master mode.

A 9th clock pulse follows the 8 clock cycles of a byte transfer, during which the receiver must send an acknowledge bit to the transmitter. Refer to the following figure.

Figure 327. I^{2}C bus protocol

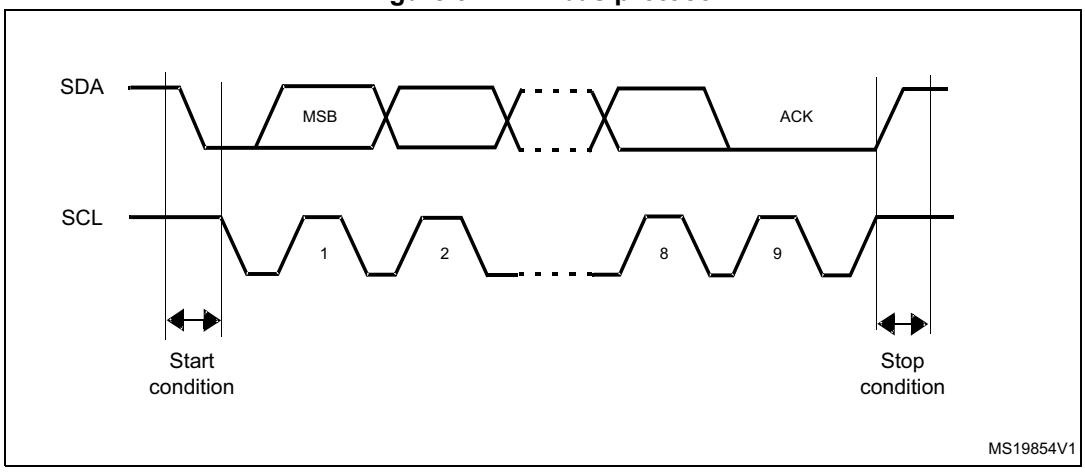

Acknowledge can be enabled or disabled by software. The I2C interface addresses can be selected by software.

34.4.4 I2C initialization

Enabling and disabling the peripheral

The I2C peripheral clock must be configured and enabled in the clock controller (refer to *Section 6: Reset and clock control (RCC)*).

Then the I2C can be enabled by setting the PE bit in the I2C_CR1 register.

When the I2C is disabled (PE=0), the I^2C performs a software reset. Refer to *Section 34.4.5: Software reset* for more details.

Noise filters

Before enabling the I2C peripheral by setting the PE bit in I2C_CR1 register, the user must configure the noise filters, if needed. By default, an analog noise filter is present on the SDA and SCL inputs. This analog filter is compliant with the I^2C specification which requires the suppression of spikes with a pulse width up to 50 ns in Fast-mode and Fast-mode Plus. The user can disable this analog filter by setting the ANFOFF bit, and/or select a digital filter by configuring the DNF[3:0] bit in the I2C_CR1 register.

When the digital filter is enabled, the level of the SCL or the SDA line is internally changed only if it remains stable for more than DNF x I2CCLK periods. This allows to suppress spikes with a programmable length of 1 to 15 I2CCLK periods.

Table 139. Comparison of analog vs. digital filters

	Analog filter	Digital filter
Pulse width of suppressed spikes	≥ 50 ns	Programmable length from 1 to 15 I2C peripheral clocks
Benefits	Available in Stop mode	– Programmable length: extra filtering capability vs. standard requirements – Stable length
Drawbacks	Variation vs. temperature, voltage, process	Wakeup from Stop mode on address match is not available when digital filter is enabled

Caution: Changing the filter configuration is not allowed when the I2C is enabled.

I2C timings

The timings must be configured in order to guarantee a correct data hold and setup time, used in master and slave modes. This is done by programming the PRESC[3:0], SCLDEL[3:0] and SDADEL[3:0] bits in the I2C_TIMINGR register.

The STM32CubeMX tool calculates and provides the I2C_TIMINGR content in the I2C configuration window

Figure 328. Setup and hold timings

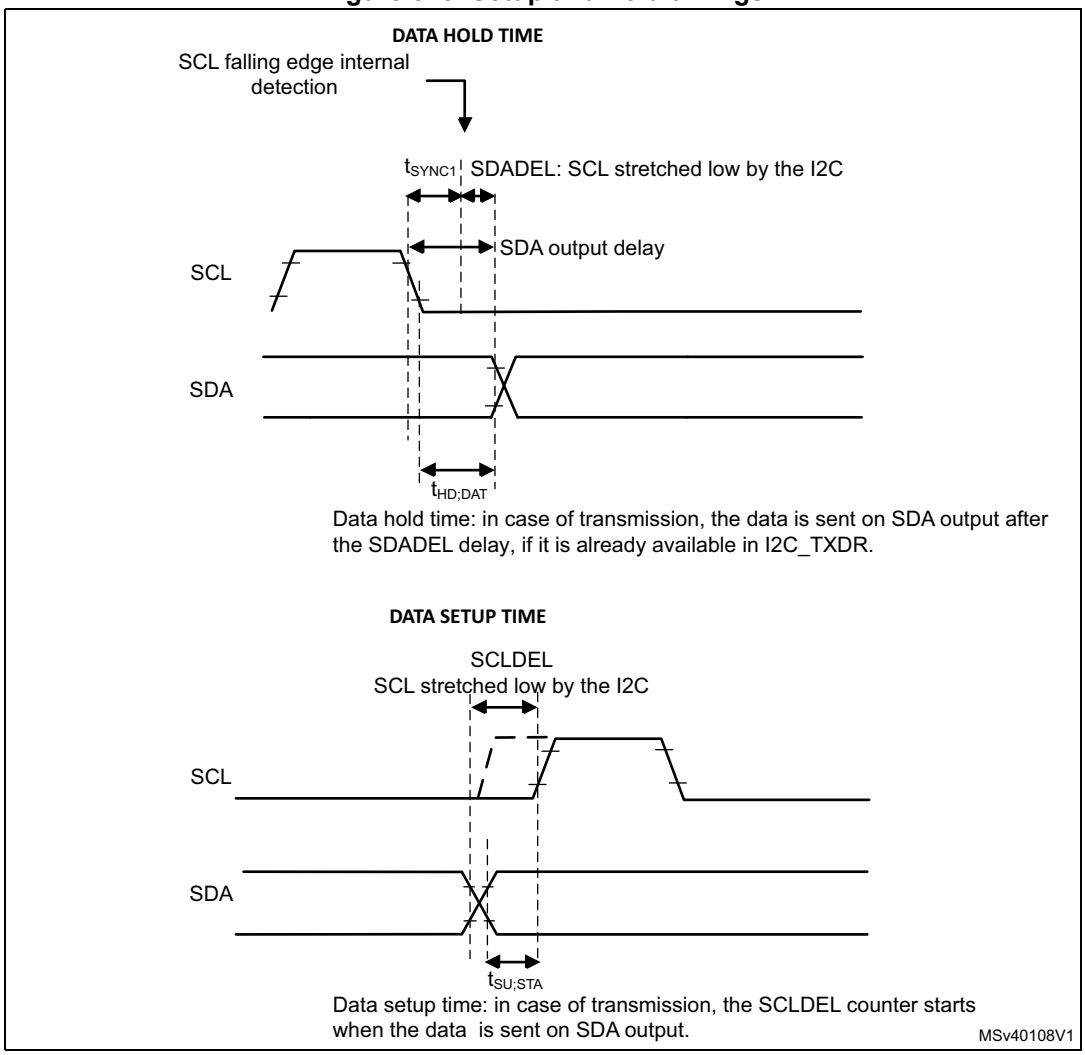

- When the SCL falling edge is internally detected, a delay is inserted before sending SDA output. This delay is t_{SDADEL} = SDADEL x t_{PRESC} + t_{I2CCLK} where t_{PRESC} = (PRESC+1) x t_{I2CCLK}.

  T_{SDADEL} impacts the hold time $t_{HD;DAT}$.

The total SDA output delay is:

t_{SYNC1} + {[SDADEL x (PRESC+1) + 1] x t_{I2CCLK} }

t_{SYNC1} duration depends on these parameters:

- SCL falling slope
- When enabled, input delay brought by the analog filter: $t_{AF(min)} < t_{AF} < t_{AF(max)}$ ns.
- When enabled, input delay brought by the digital filter: t_{DNF} = DNF x t_{I2CCLK}
- Delay due to SCL synchronization to I2CCLK clock (2 to 3 I2CCLK periods)

In order to bridge the undefined region of the SCL falling edge, the user must program SDADEL in such a way that:

$\{t_{f\ (max)} + t_{HD;DAT\ (min)} - t_{AF(min)} - [(DNF + 3) \times t_{I2CCLK}]\} / \{(PRESC + 1) \times t_{I2CCLK}\} \leq SDADEL$

$SDADEL \leq \{t_{HD;DAT\ (max)} - t_{AF(max)} - [(DNF+4) \times t_{I2CCLK}]\} / \{(PRESC + 1) \times t_{I2CCLK}\}$

Note: $t_{AF(min)}$ / $t_{AF(max)}$ *are part of the equation only when the analog filter is enabled. Refer to device datasheet for* t_{AF} *values.*

The maximum $t_{HD;DAT}$ could be 3.45 µs, 0.9 µs and 0.45 µs for Standard-mode, Fast-mode and Fast-mode Plus, but must be less than the maximum of $t_{VD;DAT}$ by a transition time. This maximum must only be met if the device does not stretch the LOW period (t_{LOW}) of the SCL signal. If the clock stretches the SCL, the data must be valid by the set-up time before it releases the clock.

The SDA rising edge is usually the worst case, so in this case the previous equation becomes:

$SDADEL \leq \{t_{VD;DAT\ (max)} - t_{r\ (max)} - 260\ ns - [(DNF+4) \times t_{I2CCLK}]\} / \{(PRESC + 1) \times t_{I2CCLK}\}$.

Note: This condition can be violated when NOSTRETCH=0, because the device stretches SCL low to guarantee the set-up time, according to the SCLDEL value.

Refer to *Table 140: I2C-SMBUS specification data setup and hold times* for t_f, t_r, $t_{HD;DAT}$ and $t_{VD;DAT}$ standard values.

- After t_{SDADEL} delay, or after sending SDA output in case the slave had to stretch the clock because the data was not yet written in I2C_TXDR register, SCL line is kept at low level during the setup time. This setup time is t_{SCLDEL} = (SCLDEL+1) x t_{PRESC} where t_{PRESC} = (PRESC+1) x t_{I2CCLK}.

  t_{SCLDEL} impacts the setup time $t_{SU;DAT}$.

In order to bridge the undefined region of the SDA transition (rising edge usually worst case), the user must program SCLDEL in such a way that:

$\{[t_{r\ (max)} + t_{SU;DAT\ (min)}] / [(PRESC+1)] \times t_{I2CCLK}]\} - 1 <= SCLDEL$

Refer to *Table 140: I2C-SMBUS specification data setup and hold times* for t_r and $t_{SU;DAT}$ standard values.

The SDA and SCL transition time values to be used are the ones in the application. Using the maximum values from the standard increases the constraints for the SDADEL and SCLDEL calculation, but ensures the feature whatever the application.

Note: At every clock pulse, after SCL falling edge detection, the I2C master or slave stretches SCL low during at least [(SDADEL+SCLDEL+1) x (PRESC+1) + 1] x t_{I2CCLK}, in both transmission and reception modes. In transmission mode, in case the data is not yet written in I2C_TXDR when SDADEL counter is finished, the I2C keeps on stretching SCL low until the next data is written. Then new data MSB is sent on SDA output, and SCLDEL counter starts, continuing stretching SCL low to guarantee the data setup time.

If NOSTRETCH=1 in slave mode, the SCL is not stretched. Consequently the SDADEL must be programmed in such a way to guarantee also a sufficient setup time.

Table 140. I²C-SMBUS specification data setup and hold times

Symbol	Parameter	Standard-mode (Sm)		Fast-mode (Fm)		Fast-mode Plus (Fm+)		SMBUS		Unit
		Min.	Max	Min.	Max	Min.	Max	Min.	Max	
$t_{HD;DAT}$	Data hold time	0	-	0	-	0	-	0.3	-	µs
$t_{VD;DAT}$	Data valid time	-	3.45	-	0.9	-	0.45	-	-	µs
$t_{SU;DAT}$	Data setup time	250	-	100	-	50	-	250	-	ns
t_r	Rise time of both SDA and SCL signals	-	1000	-	300	-	120	-	1000	ns
t_f	Fall time of both SDA and SCL signals	-	300	-	300	-	120	-	300	ns

Additionally, in master mode, the SCL clock high and low levels must be configured by programming the PRESC[3:0], SCLH[7:0] and SCLL[7:0] bits in the I2C_TIMINGR register.

- When the SCL falling edge is internally detected, a delay is inserted before releasing the SCL output. This delay is t_{SCLL} = (SCLL+1) x t_{PRESC} where t_{PRESC} = (PRESC+1) x t_{I2CCLK}.
  t_{SCLL} impacts the SCL low time t_{LOW} .
- When the SCL rising edge is internally detected, a delay is inserted before forcing the SCL output to low level. This delay is t_{SCLH} = (SCLH+1) x t_{PRESC} where t_{PRESC} = (PRESC+1) x t_{I2CCLK}. t_{SCLH} impacts the SCL high time t_{HIGH} .

Refer to *I2C master initialization* for more details.

Caution: Changing the timing configuration is not allowed when the I2C is enabled.

The I2C slave NOSTRETCH mode must also be configured before enabling the peripheral. Refer to *I2C slave initialization* for more details.

Caution: Changing the NOSTRETCH configuration is not allowed when the I2C is enabled.

Figure 329. I2C initialization flowchart

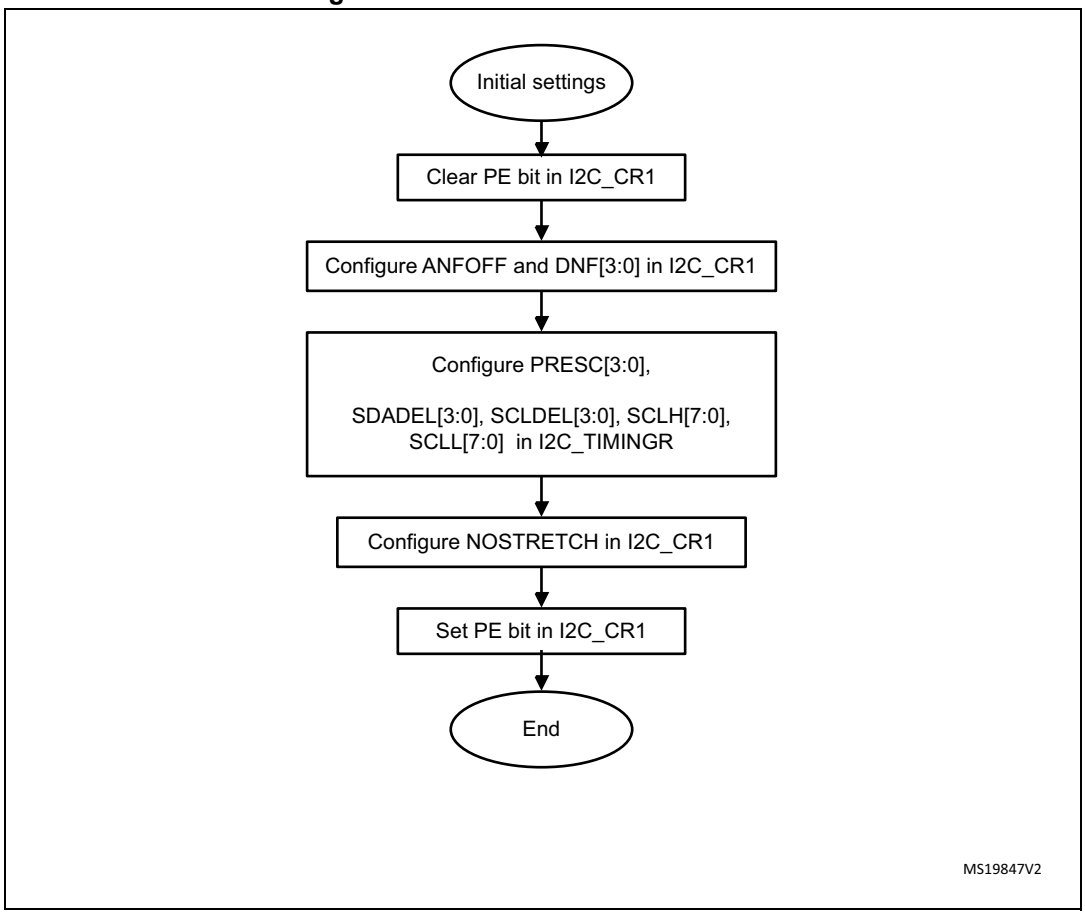

34.4.5 Software reset

A software reset can be performed by clearing the PE bit in the I2C_CR1 register. In that case I2C lines SCL and SDA are released. Internal states machines are reset and communication control bits, as well as status bits come back to their reset value. The configuration registers are not impacted.

Here is the list of impacted register bits:

1. I2C_CR2 register: START, STOP, NACK
2. I2C_ISR register: BUSY, TXE, TXIS, RXNE, ADDR, NACKF, TCR, TC, STOPF, BERR, ARLO, OVR

and in addition when the SMBus feature is supported:

1. I2C_CR2 register: PECBYTE
2. I2C_ISR register: PECERR, TIMEOUT, ALERT

PE must be kept low during at least 3 APB clock cycles in order to perform the software reset. This is ensured by writing the following software sequence: - Write PE=0 - Check PE=0 - Write PE=1.

34.4.6 Data transfer

The data transfer is managed through transmit and receive data registers and a shift register.

Reception

The SDA input fills the shift register. After the 8th SCL pulse (when the complete data byte is received), the shift register is copied into I2C_RXDR register if it is empty (RXNE=0). If RXNE=1, meaning that the previous received data byte has not yet been read, the SCL line is stretched low until I2C_RXDR is read. The stretch is inserted between the 8th and 9th SCL pulse (before the Acknowledge pulse).

Figure 330. Data reception

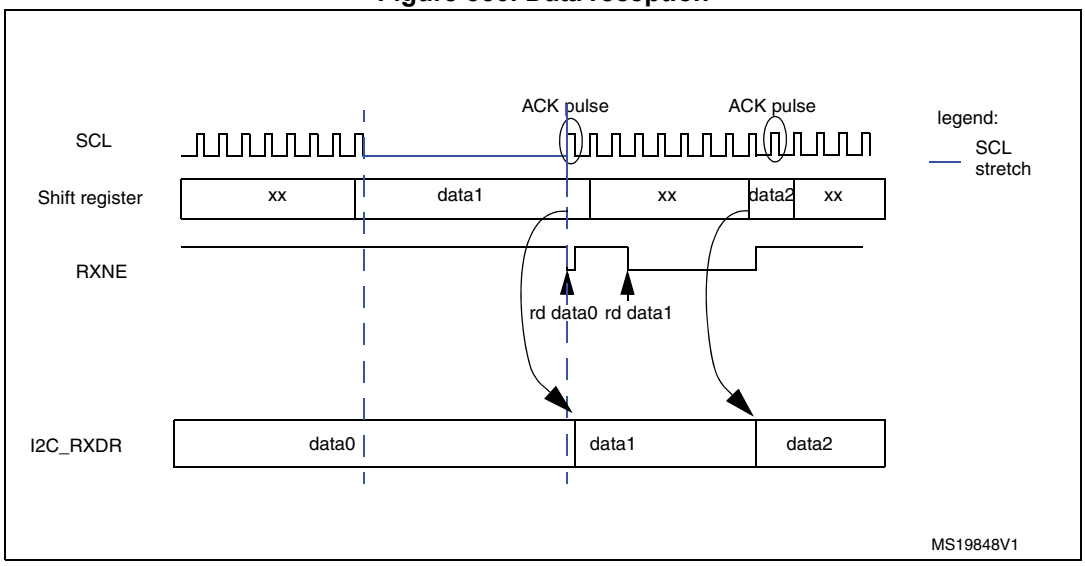

Transmission

If the I2C_TXDR register is not empty (TXE=0), its content is copied into the shift register after the 9th SCL pulse (the Acknowledge pulse). Then the shift register content is shifted out on SDA line. If TXE=1, meaning that no data is written yet in I2C_TXDR, SCL line is stretched low until I2C_TXDR is written. The stretch is done after the 9th SCL pulse.

Figure 331. Data transmission

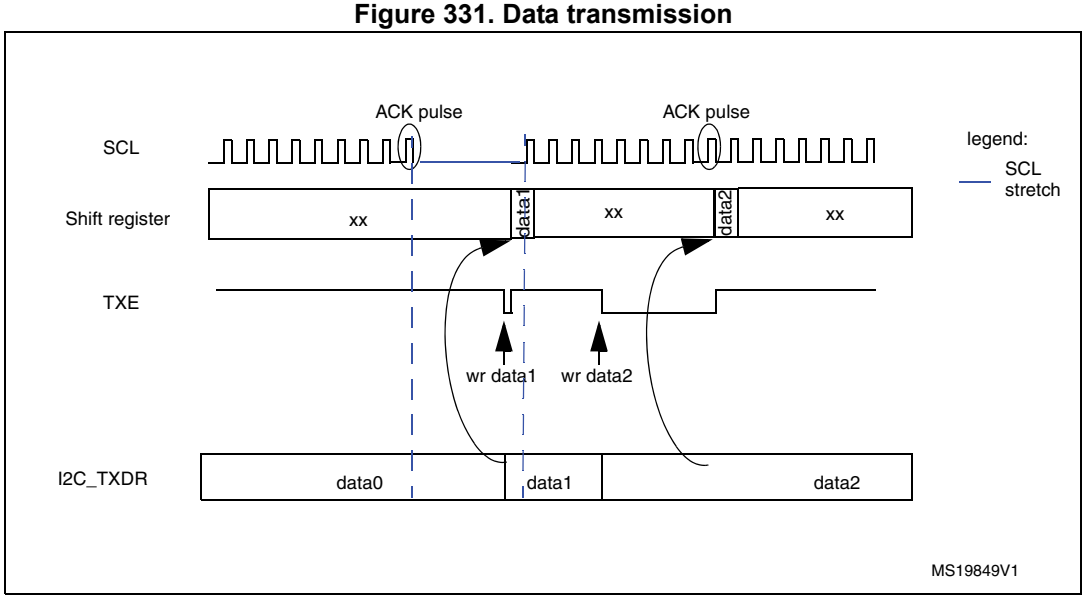

Hardware transfer management

The I2C has a byte counter embedded in hardware in order to manage byte transfer and to close the communication in various modes such as:

- NACK, STOP and ReSTART generation in master mode
- ACK control in slave receiver mode
- PEC generation/checking when SMBus feature is supported

The byte counter is always used in master mode. By default it is disabled in slave mode, but it can be enabled by software by setting the SBC (Slave Byte Control) bit in the I2C_CR2 register.

The number of bytes to be transferred is programmed in the NBYTES[7:0] bit field in the I2C_CR2 register. If the number of bytes to be transferred (NBYTES) is greater than 255, or if a receiver wants to control the acknowledge value of a received data byte, the reload mode must be selected by setting the RELOAD bit in the I2C_CR2 register. In this mode, TCR flag is set when the number of bytes programmed in NBYTES has been transferred, and an interrupt is generated if TCIE is set. SCL is stretched as long as TCR flag is set. TCR is cleared by software when NBYTES is written to a non-zero value.

When the NBYTES counter is reloaded with the last number of bytes, RELOAD bit must be cleared.

When RELOAD=0 in master mode, the counter can be used in 2 modes:

- **Automatic end mode** (AUTOEND = '1' in the I2C_CR2 register). In this mode, the master automatically sends a STOP condition once the number of bytes programmed in the NBYTES[7:0] bit field has been transferred.
- **Software end mode** (AUTOEND = '0' in the I2C_CR2 register). In this mode, software action is expected once the number of bytes programmed in the NBYTES[7:0] bit field has been transferred; the TC flag is set and an interrupt is generated if the TCIE bit is set. The SCL signal is stretched as long as the TC flag is set. The TC flag is cleared by software when the START or STOP bit is set in the I2C_CR2 register. This mode must be used when the master wants to send a RESTART condition.

Caution: The AUTOEND bit has no effect when the RELOAD bit is set.

Table 141. I2C configuration table

Function	SBC bit	RELOAD bit	AUTOEND bit
Master Tx/Rx NBYTES + STOP	x	0	1
Master Tx/Rx + NBYTES + RESTART	x	0	0
Slave Tx/Rx all received bytes ACKed	0	x	x
Slave Rx with ACK control	1	1	x

34.4.7 I2C slave mode

I2C slave initialization

In order to work in slave mode, the user must enable at least one slave address. Two registers I2C_OAR1 and I2C_OAR2 are available in order to program the slave own addresses OA1 and OA2.

- OA1 can be configured either in 7-bit mode (by default) or in 10-bit addressing mode by setting the OA1MODE bit in the I2C_OAR1 register.

  OA1 is enabled by setting the OA1EN bit in the I2C_OAR1 register.
- If additional slave addresses are required, the 2nd slave address OA2 can be configured. Up to 7 OA2 LSB can be masked by configuring the OA2MSK[2:0] bits in the I2C_OAR2 register. Therefore for OA2MSK configured from 1 to 6, only OA2[7:2], OA2[7:3], OA2[7:4], OA2[7:5], OA2[7:6] or OA2[7] are compared with the received address. As soon as OA2MSK is not equal to 0, the address comparator for OA2 excludes the I2C reserved addresses (0000 XXX and 1111 XXX), which are not acknowledged. If OA2MSK=7, all received 7-bit addresses are acknowledged (except reserved addresses). OA2 is always a 7-bit address.

  These reserved addresses can be acknowledged if they are enabled by the specific enable bit, if they are programmed in the I2C_OAR1 or I2C_OAR2 register with OA2MSK=0.

  OA2 is enabled by setting the OA2EN bit in the I2C_OAR2 register.
- The General Call address is enabled by setting the GCEN bit in the I2C_CR1 register.

When the I2C is selected by one of its enabled addresses, the ADDR interrupt status flag is set, and an interrupt is generated if the ADDRIE bit is set.

By default, the slave uses its clock stretching capability, which means that it stretches the SCL signal at low level when needed, in order to perform software actions. If the master does not support clock stretching, the I2C must be configured with NOSTRETCH=1 in the I2C_CR1 register.

After receiving an ADDR interrupt, if several addresses are enabled the user must read the ADDCODE[6:0] bits in the I2C_ISR register in order to check which address matched. DIR flag must also be checked in order to know the transfer direction.

Slave clock stretching (NOSTRETCH = 0)

In default mode, the I2C slave stretches the SCL clock in the following situations:

- When the ADDR flag is set: the received address matches with one of the enabled slave addresses. This stretch is released when the ADDR flag is cleared by software setting the ADDRCF bit.
- In transmission, if the previous data transmission is completed and no new data is written in I2C_TXDR register, or if the first data byte is not written when the ADDR flag is cleared (TXE=1). This stretch is released when the data is written to the I2C_TXDR register.
- In reception when the I2C_RXDR register is not read yet and a new data reception is completed. This stretch is released when I2C_RXDR is read.
- When TCR = 1 in Slave Byte Control mode, reload mode (SBC=1 and RELOAD=1), meaning that the last data byte has been transferred. This stretch is released when then TCR is cleared by writing a non-zero value in the NBYTES[7:0] field.
- After SCL falling edge detection, the I2C stretches SCL low during [(SDADEL+SCLDEL+1) x (PRESC+1) + 1] x t_{I2CCLK}.

Slave without clock stretching (NOSTRETCH = 1)

When NOSTRETCH = 1 in the I2C_CR1 register, the I2C slave does not stretch the SCL signal.

- The SCL clock is not stretched while the ADDR flag is set.
- In transmission, the data must be written in the I2C_TXDR register before the first SCL pulse corresponding to its transfer occurs. If not, an underrun occurs, the OVR flag is set in the I2C_ISR register and an interrupt is generated if the ERRIE bit is set in the I2C_CR1 register. The OVR flag is also set when the first data transmission starts and the STOPF bit is still set (has not been cleared). Therefore, if the user clears the STOPF flag of the previous transfer only after writing the first data to be transmitted in the next transfer, he ensures that the OVR status is provided, even for the first data to be transmitted.
- In reception, the data must be read from the I2C_RXDR register before the 9th SCL pulse (ACK pulse) of the next data byte occurs. If not an overrun occurs, the OVR flag is set in the I2C_ISR register and an interrupt is generated if the ERRIE bit is set in the I2C_CR1 register.

Slave Byte Control mode

In order to allow byte ACK control in slave reception mode, Slave Byte Control mode must be enabled by setting the SBC bit in the I2C_CR1 register. This is required to be compliant with SMBus standards.

Reload mode must be selected in order to allow byte ACK control in slave reception mode (RELOAD=1). To get control of each byte, NBYTES must be initialized to 0x1 in the ADDR interrupt subroutine, and reloaded to 0x1 after each received byte. When the byte is received, the TCR bit is set, stretching the SCL signal low between the 8th and 9th SCL pulses. The user can read the data from the I2C_RXDR register, and then decide to acknowledge it or not by configuring the ACK bit in the I2C_CR2 register. The SCL stretch is released by programming NBYTES to a non-zero value: the acknowledge or not-acknowledge is sent and next byte can be received.

NBYTES can be loaded with a value greater than 0x1, and in this case, the reception flow is continuous during NBYTES data reception.

Note: The SBC bit must be configured when the I2C is disabled, or when the slave is not addressed, or when ADDR=1.

The RELOAD bit value can be changed when ADDR=1, or when TCR=1.

Caution: Slave Byte Control mode is not compatible with NOSTRETCH mode. Setting SBC when NOSTRETCH=1 is not allowed.

Figure 332. Slave initialization flowchart

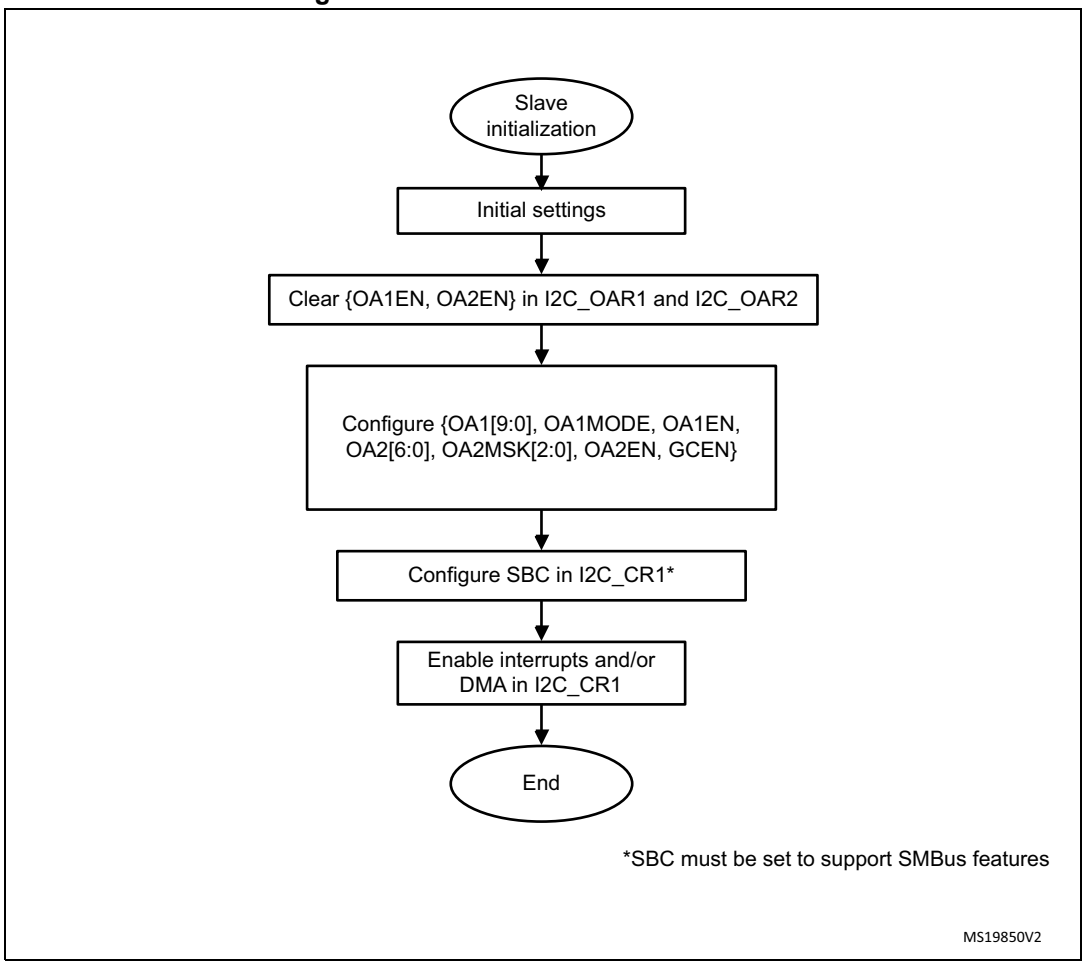

Slave transmitter

A transmit interrupt status (TXIS) is generated when the I2C_TXDR register becomes empty. An interrupt is generated if the TXIE bit is set in the I2C_CR1 register.

The TXIS bit is cleared when the I2C_TXDR register is written with the next data byte to be transmitted.

When a NACK is received, the NACKF bit is set in the I2C_ISR register and an interrupt is generated if the NACKIE bit is set in the I2C_CR1 register. The slave automatically releases the SCL and SDA lines in order to let the master perform a STOP or a RESTART condition. The TXIS bit is not set when a NACK is received.

When a STOP is received and the STOPIE bit is set in the I2C_CR1 register, the STOPF flag is set in the I2C_ISR register and an interrupt is generated. In most applications, the SBC bit is usually programmed to ‘0’. In this case, If TXE = 0 when the slave address is received (ADDR=1), the user can choose either to send the content of the I2C_TXDR register as the first data byte, or to flush the I2C_TXDR register by setting the TXE bit in order to program a new data byte.

In Slave Byte Control mode (SBC=1), the number of bytes to be transmitted must be programmed in NBYTES in the address match interrupt subroutine (ADDR=1). In this case,

the number of TXIS events during the transfer corresponds to the value programmed in NBYTES.

Caution: When NOSTRETCH=1, the SCL clock is not stretched while the ADDR flag is set, so the user cannot flush the I2C_TXDR register content in the ADDR subroutine, in order to program the first data byte. The first data byte to be sent must be previously programmed in the I2C_TXDR register:

- This data can be the data written in the last TXIS event of the previous transmission message.
- If this data byte is not the one to be sent, the I2C_TXDR register can be flushed by setting the TXE bit in order to program a new data byte. The STOPF bit must be cleared only after these actions, in order to guarantee that they are executed before the first data transmission starts, following the address acknowledge.

  If STOPF is still set when the first data transmission starts, an underrun error will be generated (the OVR flag is set).

  If a TXIS event is needed, (Transmit Interrupt or Transmit DMA request), the user must set the TXIS bit in addition to the TXE bit, in order to generate a TXIS event.

Figure 333. Transfer sequence flowchart for I2C slave transmitter, NOSTRETCH=0

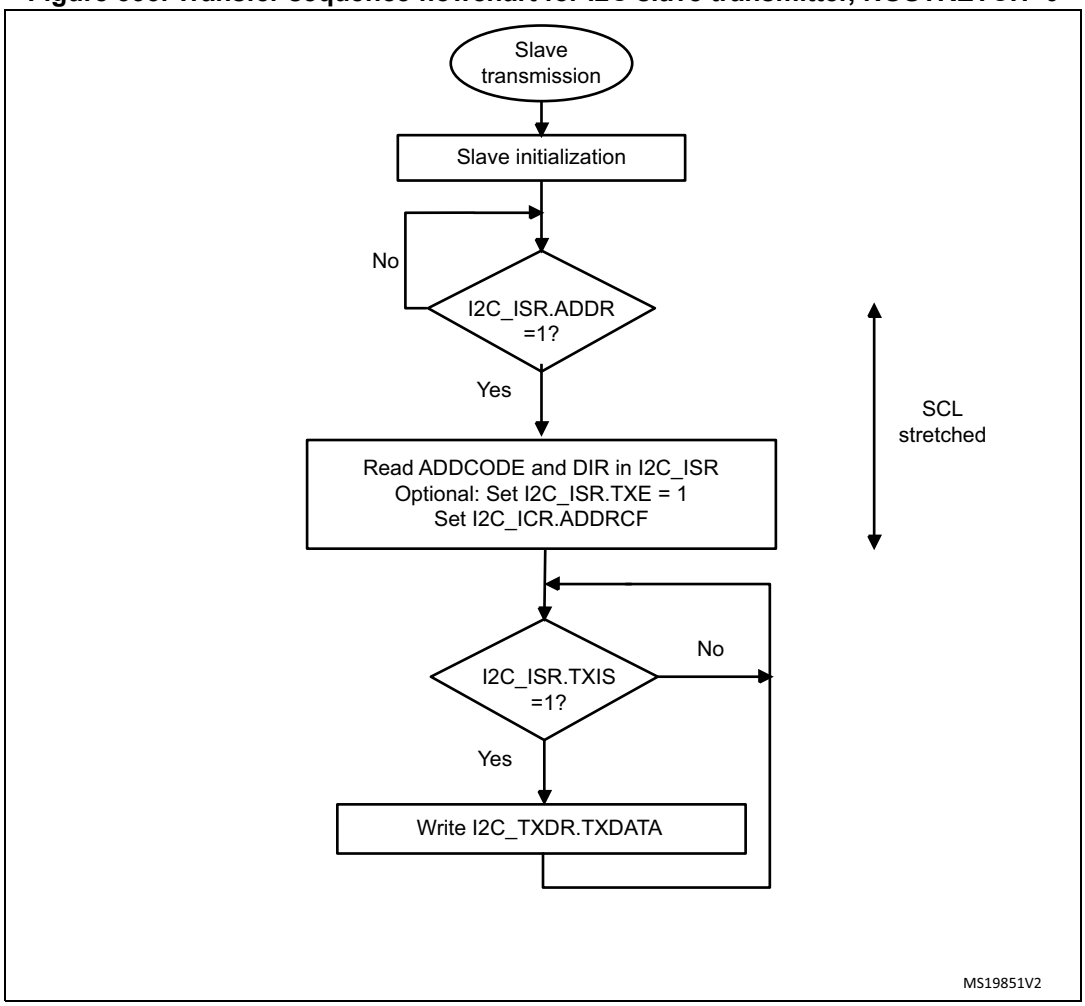

Figure 334. Transfer sequence flowchart for I2C slave transmitter, NOSTRETCH=1

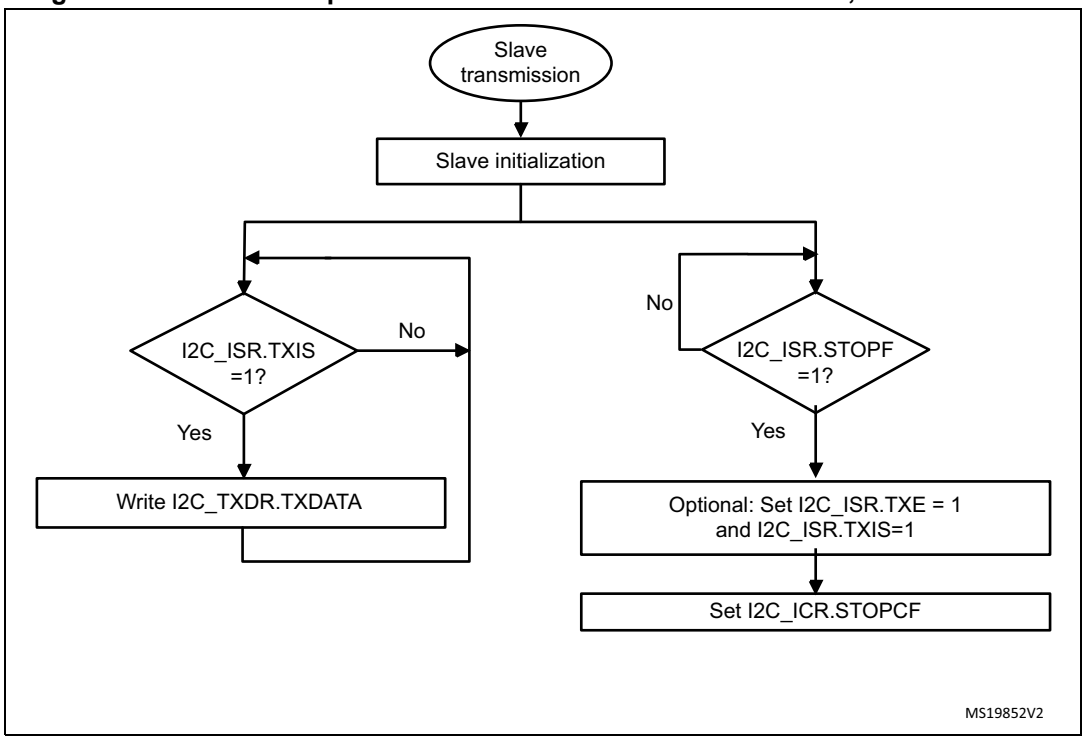

Figure 335. Transfer bus diagrams for I2C slave transmitter

Example I2C slave transmitter 3 bytes with 1st data flushed, NOSTRETCH=0:

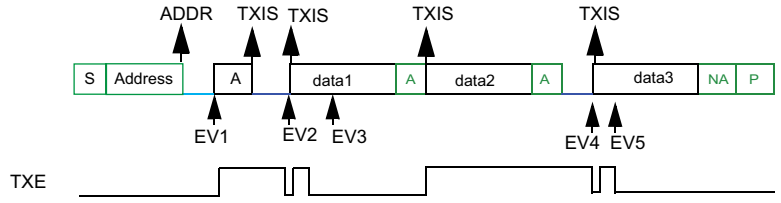

legend:
transmission
reception
SCL stretch

EV1: ADDR ISR: check ADDCODE and DIR, set TXE, set ADDRCF
EV2: TXIS ISR: wr data1
EV3: TXIS ISR: wr data2
EV4: TXIS ISR: wr data3
EV5: TXIS ISR: wr data4 (not sent)

Example I2C slave transmitter 3 bytes without 1st data flush, NOSTRETCH=0:

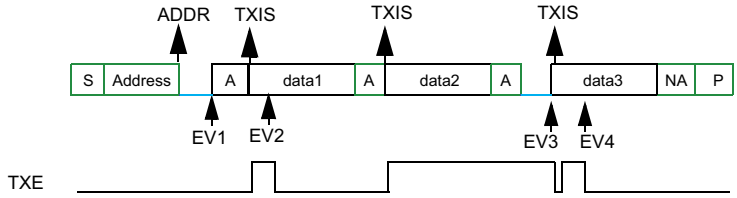

legend :
transmission
reception
SCL stretch

EV1: ADDR ISR: check ADDCODE and DIR, set ADDRCF
EV2: TXIS ISR: wr data2
EV3: TXIS ISR: wr data3
EV4: TXIS ISR: wr data4 (not sent)

Example I2C slave transmitter 3 bytes, NOSTRETCH=1:

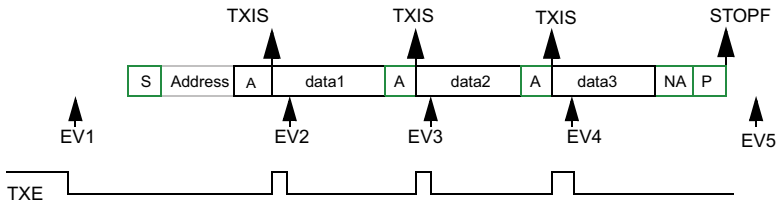

legend:
transmission
reception
SCL stretch

EV1: wr data1
EV2: TXIS ISR: wr data2
EV3: TXIS ISR: wr data3
EV4: TXIS ISR: wr data4 (not sent)
EV5: STOPF ISR: (optional: set TXE and TXIS), set STOPCF

MS19853V1

Slave receiver

RXNE is set in I2C_ISR when the I2C_RXDR is full, and generates an interrupt if RXIE is set in I2C_CR1. RXNE is cleared when I2C_RXDR is read.

When a STOP is received and STOPIE is set in I2C_CR1, STOPF is set in I2C_ISR and an interrupt is generated.

Figure 336. Transfer sequence flowchart for slave receiver with NOSTRETCH=0

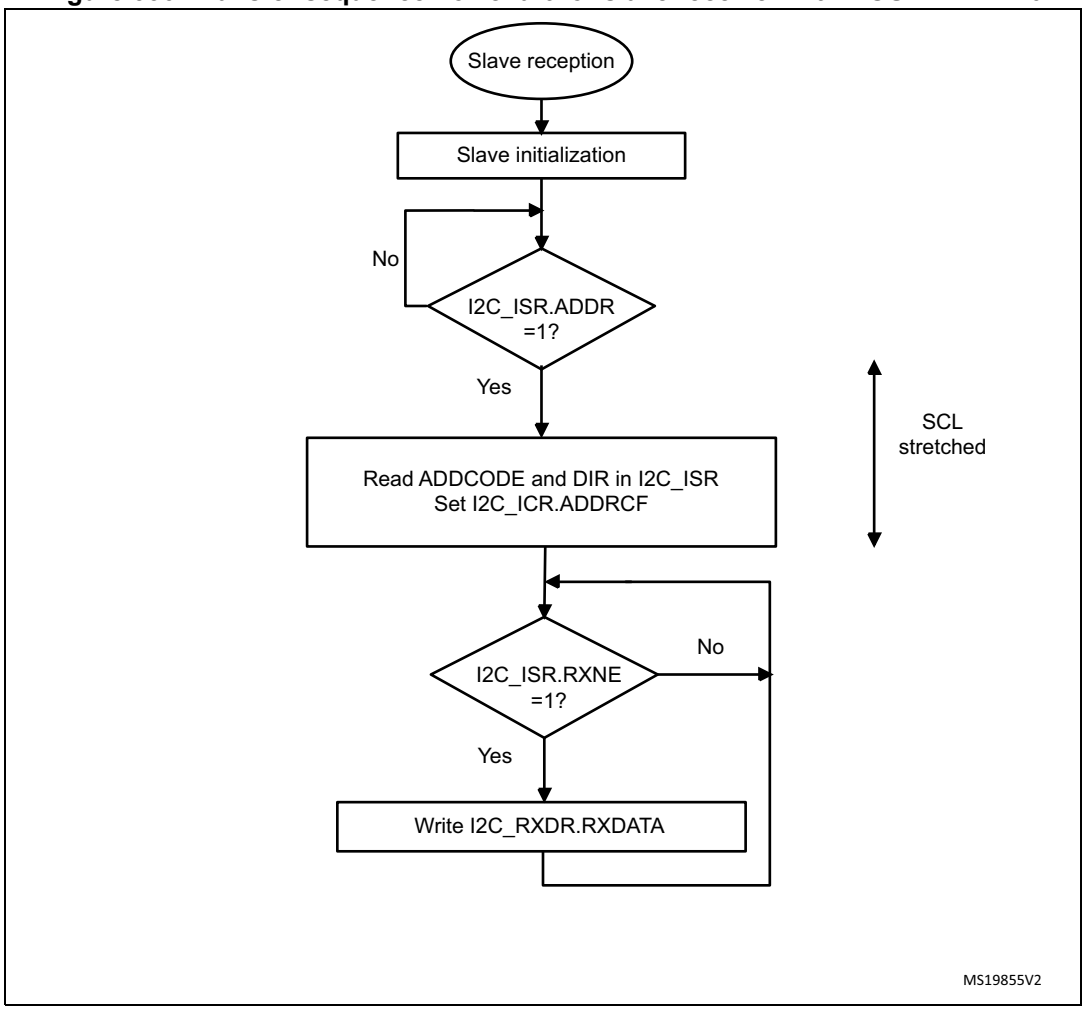

Figure 337. Transfer sequence flowchart for slave receiver with NOSTRETCH=1

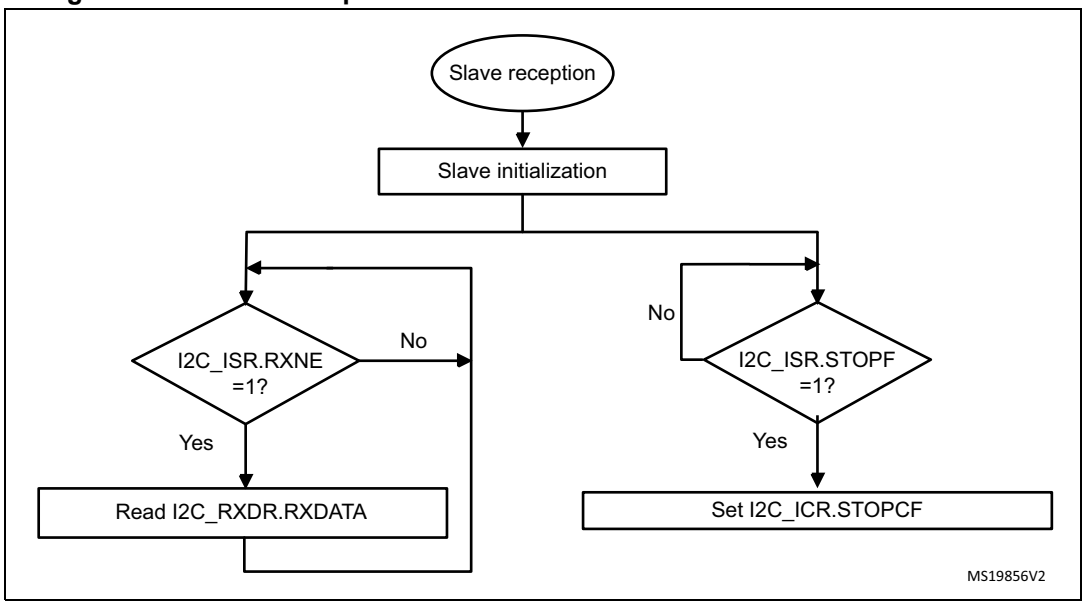

Figure 338. Transfer bus diagrams for I2C slave receiver

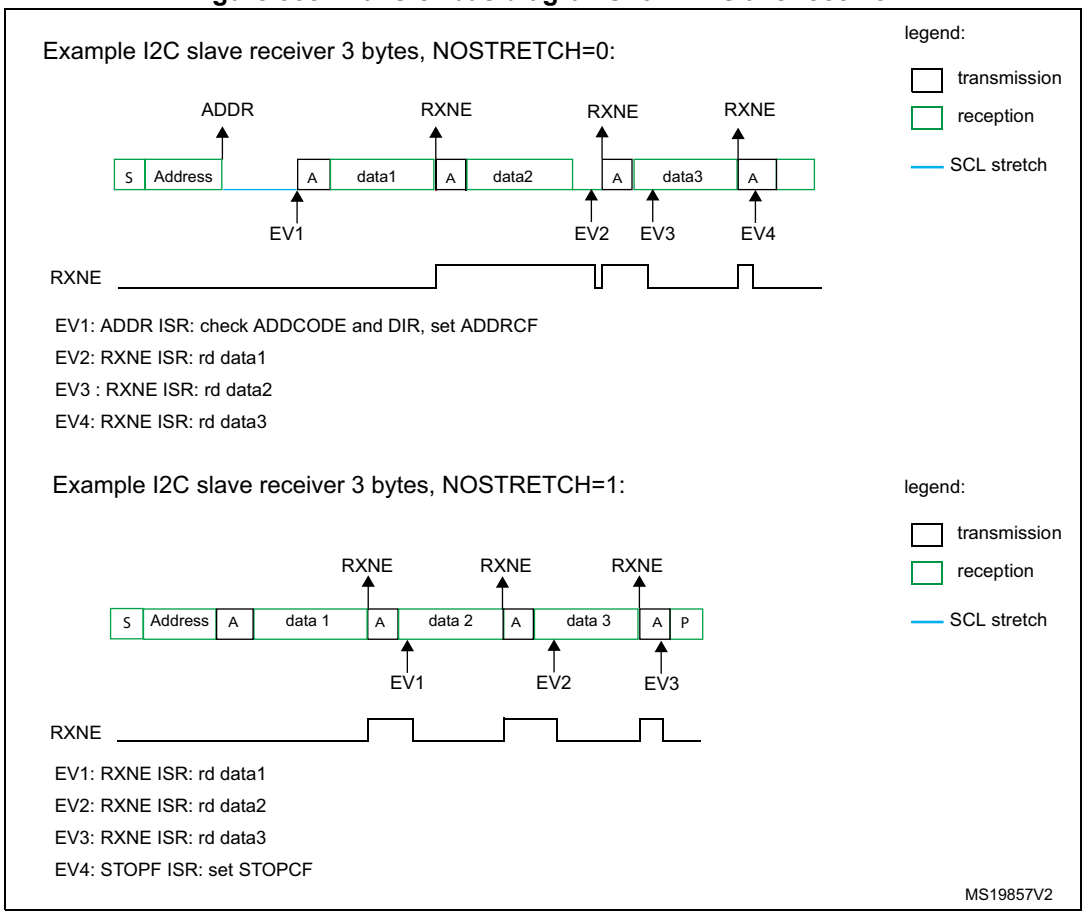

34.4.8 I2C master mode

I2C master initialization

Before enabling the peripheral, the I2C master clock must be configured by setting the SCLH and SCLL bits in the I2C_TIMINGR register.

The STM32CubeMX tool calculates and provides the I2C_TIMINGR content in the I2C Configuration window.

A clock synchronization mechanism is implemented in order to support multi-master environment and slave clock stretching.

In order to allow clock synchronization:

- The low level of the clock is counted using the SCLL counter, starting from the SCL low level internal detection.
- The high level of the clock is counted using the SCLH counter, starting from the SCL high level internal detection.

The I2C detects its own SCL low level after a t_{SYNC1} delay depending on the SCL falling edge, SCL input noise filters (analog + digital) and SCL synchronization to the I2CxCLK clock. The I2C releases SCL to high level once the SCLL counter reaches the value programmed in the SCLL[7:0] bits in the I2C_TIMINGR register.

The I2C detects its own SCL high level after a t_{SYNC2} delay depending on the SCL rising edge, SCL input noise filters (analog + digital) and SCL synchronization to I2CxCLK clock. The I2C ties SCL to low level once the SCLH counter is reached reaches the value programmed in the SCLH[7:0] bits in the I2C_TIMINGR register.

Consequently the master clock period is:

$t_{SCL} = t_{SYNC1} + t_{SYNC2} + \{[(SCLH+1) + (SCLL+1)] \times (PRESC+1) \times t_{I2CCLK}\}$

The duration of t_{SYNC1} depends on these parameters:

- SCL falling slope
- When enabled, input delay induced by the analog filter.
- When enabled, input delay induced by the digital filter: DNF x t_{I2CCLK}
- Delay due to SCL synchronization with I2CCLK clock (2 to 3 I2CCLK periods)

The duration of t_{SYNC2} depends on these parameters:

- SCL rising slope
- When enabled, input delay induced by the analog filter.
- When enabled, input delay induced by the digital filter: DNF x t_{I2CCLK}
- Delay due to SCL synchronization with I2CCLK clock (2 to 3 I2CCLK periods)

Figure 339. Master clock generation

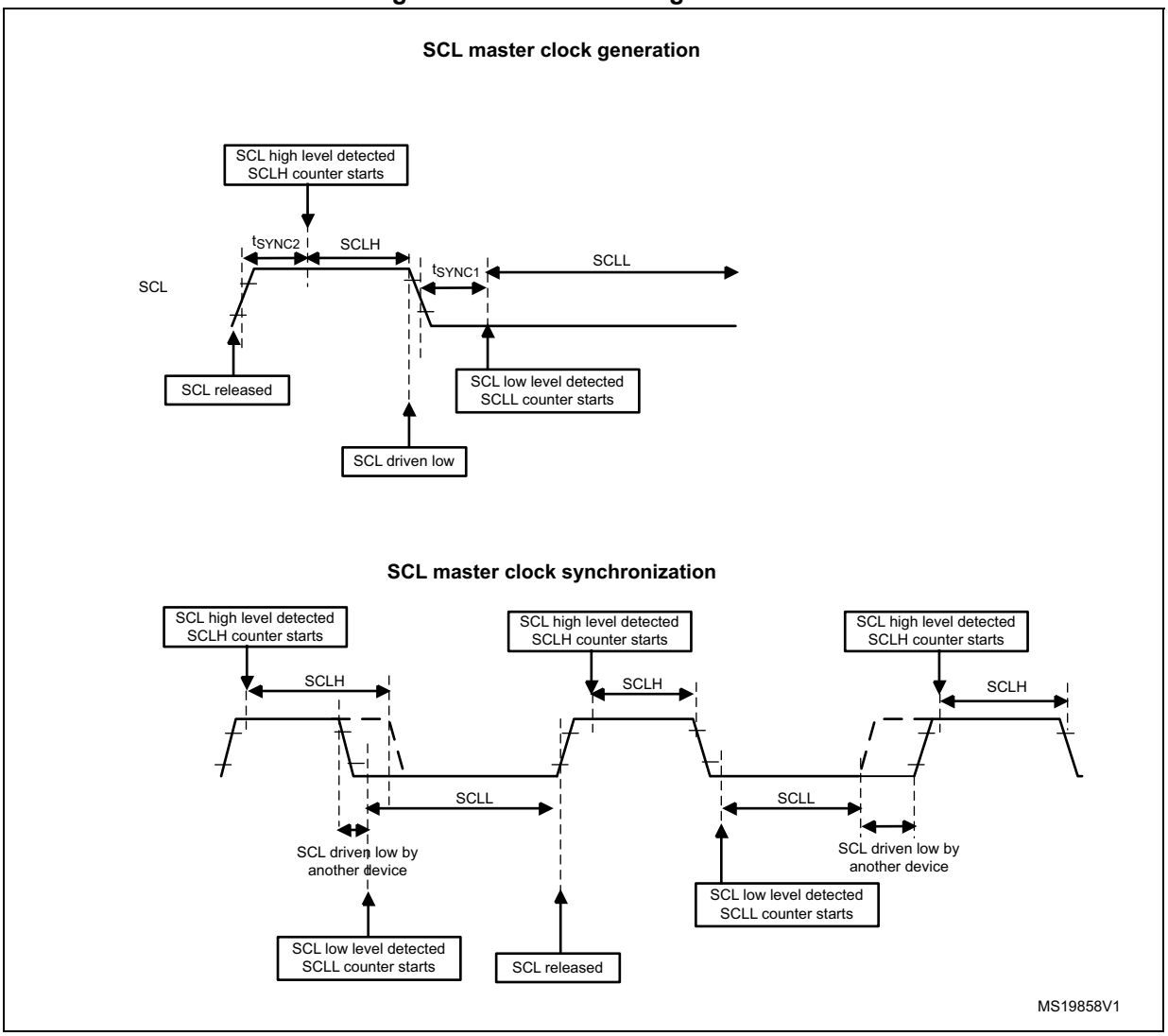

Caution: In order to be I^2C or SMBus compliant, the master clock must respect the timings given below:

Table 142. I²C-SMBUS specification clock timings

Symbol	Parameter	Standard-mode (Sm)		Fast-mode (Fm)		Fast-mode Plus (Fm+)		SMBUS		Unit
		Min	Max	Min	Max	Min	Max	Min	Max	
f_{SCL}	SCL clock frequency	-	100	-	400	-	1000	-	100	kHz
$t_{HD:STA}$	Hold time (repeated) START condition	4.0	-	0.6	-	0.26	-	4.0	-	µs
$t_{SU:STA}$	Set-up time for a repeated START condition	4.7	-	0.6	-	0.26	-	4.7	-	µs
$t_{SU:STO}$	Set-up time for STOP condition	4.0	-	0.6	-	0.26	-	4.0	-	µs
t_{BUF}	Bus free time between a STOP and START condition	4.7	-	1.3	-	0.5	-	4.7	-	µs
t_{LOW}	Low period of the SCL clock	4.7	-	1.3	-	0.5	-	4.7	-	µs
t_{HIGH}	Period of the SCL clock	4.0	-	0.6	-	0.26	-	4.0	50	µs
t_r	Rise time of both SDA and SCL signals	-	1000	-	300	-	120	-	1000	ns
t_f	Fall time of both SDA and SCL signals	-	300	-	300	-	120	-	300	ns

Note: *SCLL is also used to generate the t_{BUF} and $t_{SU:STA}$ timings.*

SCLH is also used to generate the $t_{HD:STA}$ and $t_{SU:STO}$ timings.

Refer to *Section 34.4.9: I2C_TIMINGR register configuration examples* for examples of I2C_TIMINGR settings vs. I2CCLK frequency.

Master communication initialization (address phase)

In order to initiate the communication, the user must program the following parameters for the addressed slave in the I2C_CR2 register:

- Addressing mode (7-bit or 10-bit): ADD10
- Slave address to be sent: SADD[9:0]
- Transfer direction: RD_WRN
- In case of 10-bit address read: HEAD10R bit. HEAD10R must be configure to indicate if the complete address sequence must be sent, or only the header in case of a direction change.
- The number of bytes to be transferred: NBYTES[7:0]. If the number of bytes is equal to or greater than 255 bytes, NBYTES[7:0] must initially be filled with 0xFF.

The user must then set the START bit in I2C_CR2 register. Changing all the above bits is not allowed when START bit is set.

Then the master automatically sends the START condition followed by the slave address as soon as it detects that the bus is free (BUSY = 0) and after a delay of t_{BUF}.

In case of an arbitration loss, the master automatically switches back to slave mode and can acknowledge its own address if it is addressed as a slave.

Note: The START bit is reset by hardware when the slave address has been sent on the bus, whatever the received acknowledge value. The START bit is also reset by hardware if an arbitration loss occurs.
In 10-bit addressing mode, when the Slave Address first 7 bits is NACKed by the slave, the master will re-launch automatically the slave address transmission until ACK is received. In this case ADDRCF must be set if a NACK is received from the slave, in order to stop sending the slave address.
If the I2C is addressed as a slave (ADDR=1) while the START bit is set, the I2C switches to slave mode and the START bit is cleared when the ADDRCF bit is set.

Note: The same procedure is applied for a Repeated Start condition. In this case BUSY=1.

Figure 340. Master initialization flowchart

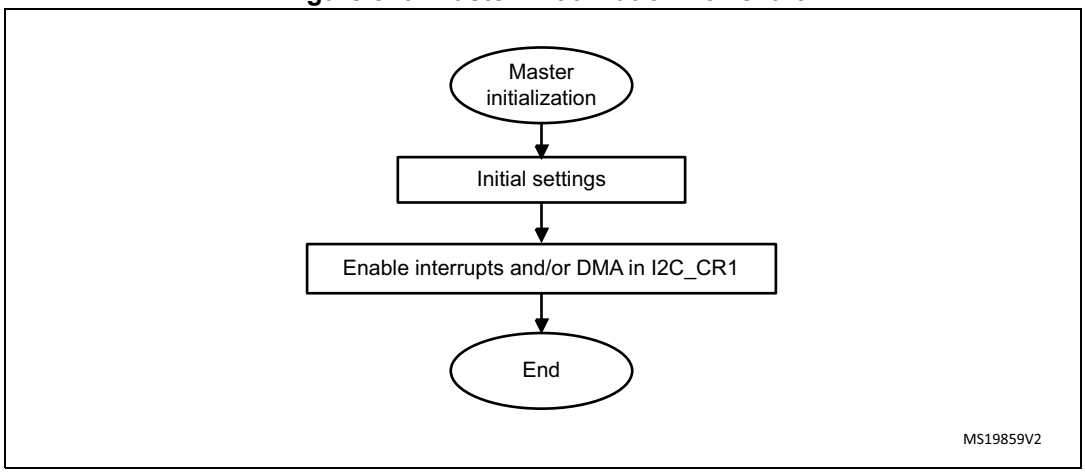

Initialization of a master receiver addressing a 10-bit address slave

- If the slave address is in 10-bit format, the user can choose to send the complete read sequence by clearing the HEAD10R bit in the I2C_CR2 register. In this case the master automatically sends the following complete sequence after the START bit is set: (Re)Start + Slave address 10-bit header Write + Slave address 2nd byte + REStart + Slave address 10-bit header Read

Figure 341. 10-bit address read access with HEAD10R=0

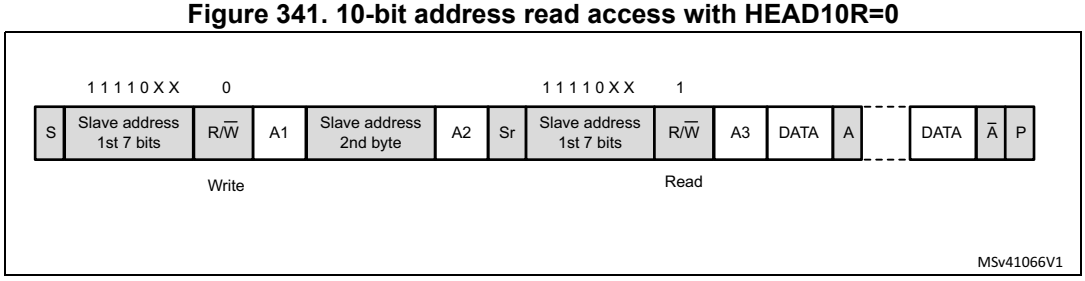

- If the master addresses a 10-bit address slave, transmits data to this slave and then reads data from the same slave, a master transmission flow must be done first. Then a repeated start is set with the 10 bit slave address configured with HEAD10R=1. In this case the master sends this sequence: ReStart + Slave address 10-bit header Read.

Figure 342. 10-bit address read access with HEAD10R=1

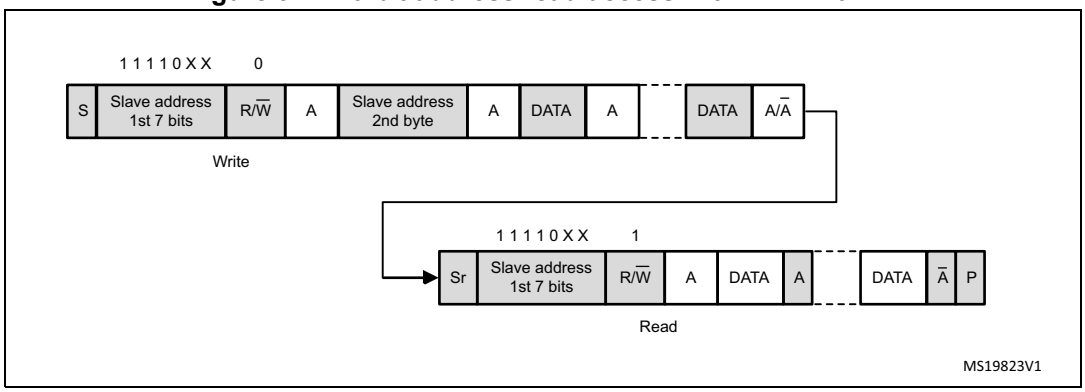

Master transmitter

In the case of a write transfer, the TXIS flag is set after each byte transmission, after the 9th SCL pulse when an ACK is received.

A TXIS event generates an interrupt if the TXIE bit is set in the I2C_CR1 register. The flag is cleared when the I2C_TXDR register is written with the next data byte to be transmitted.

The number of TXIS events during the transfer corresponds to the value programmed in NBYTES[7:0]. If the total number of data bytes to be sent is greater than 255, reload mode must be selected by setting the RELOAD bit in the I2C_CR2 register. In this case, when NBYTES data have been transferred, the TCR flag is set and the SCL line is stretched low until NBYTES[7:0] is written to a non-zero value.

The TXIS flag is not set when a NACK is received.

- When RELOAD=0 and NBYTES data have been transferred:
  - In automatic end mode (AUTOEND=1), a STOP is automatically sent.
  - In software end mode (AUTOEND=0), the TC flag is set and the SCL line is stretched low in order to perform software actions:

    A RESTART condition can be requested by setting the START bit in the I2C_CR2 register with the proper slave address configuration, and number of bytes to be transferred. Setting the START bit clears the TC flag and the START condition is sent on the bus.

    A STOP condition can be requested by setting the STOP bit in the I2C_CR2 register. Setting the STOP bit clears the TC flag and the STOP condition is sent on the bus.
- If a NACK is received: the TXIS flag is not set, and a STOP condition is automatically sent after the NACK reception. the NACKF flag is set in the I2C_ISR register, and an interrupt is generated if the NACKIE bit is set.

Figure 343. Transfer sequence flowchart for I2C master transmitter for N≤255 bytes

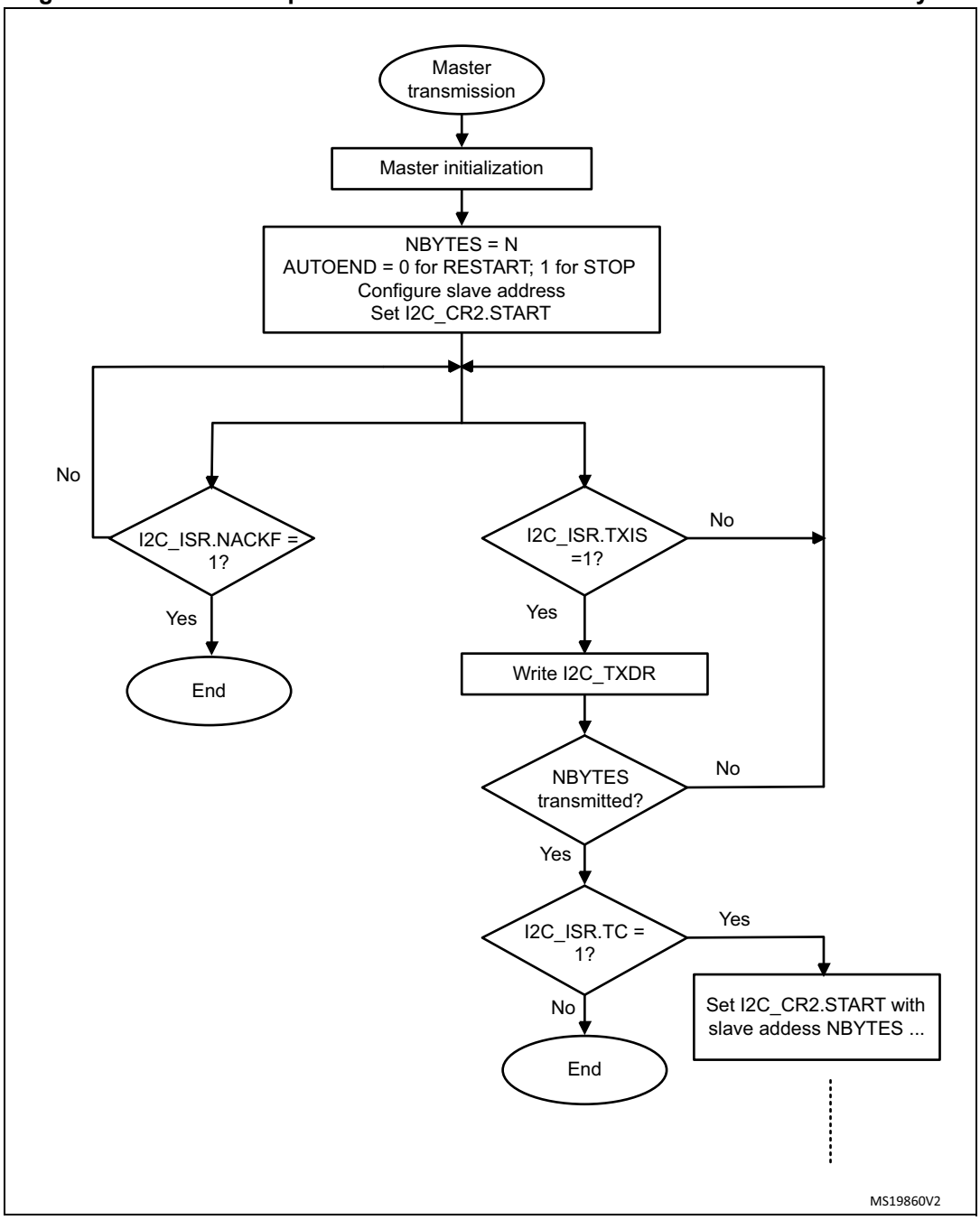

Figure 344. Transfer sequence flowchart for I2C master transmitter for N>255 bytes

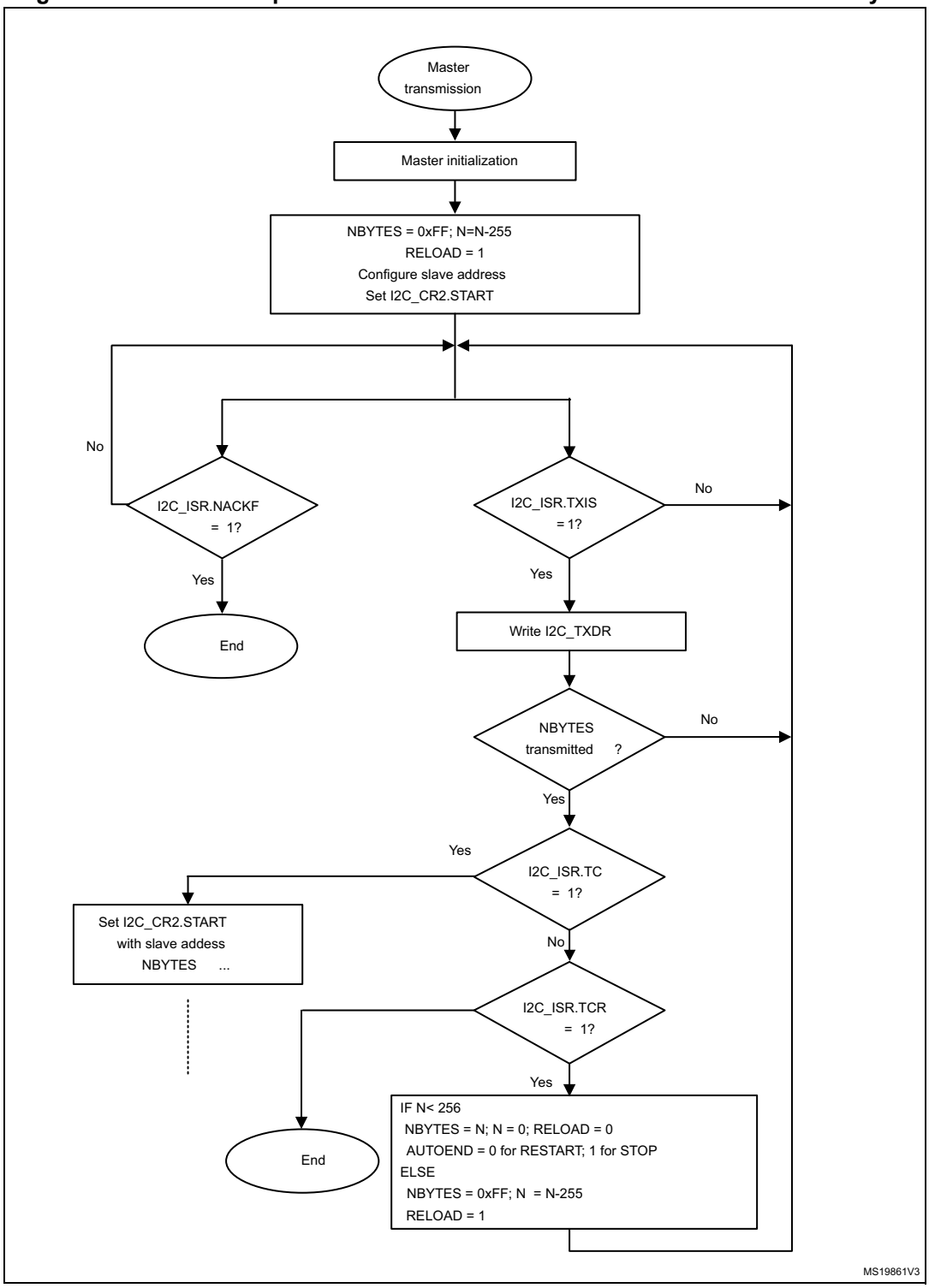

Figure 345. Transfer bus diagrams for I2C master transmitter

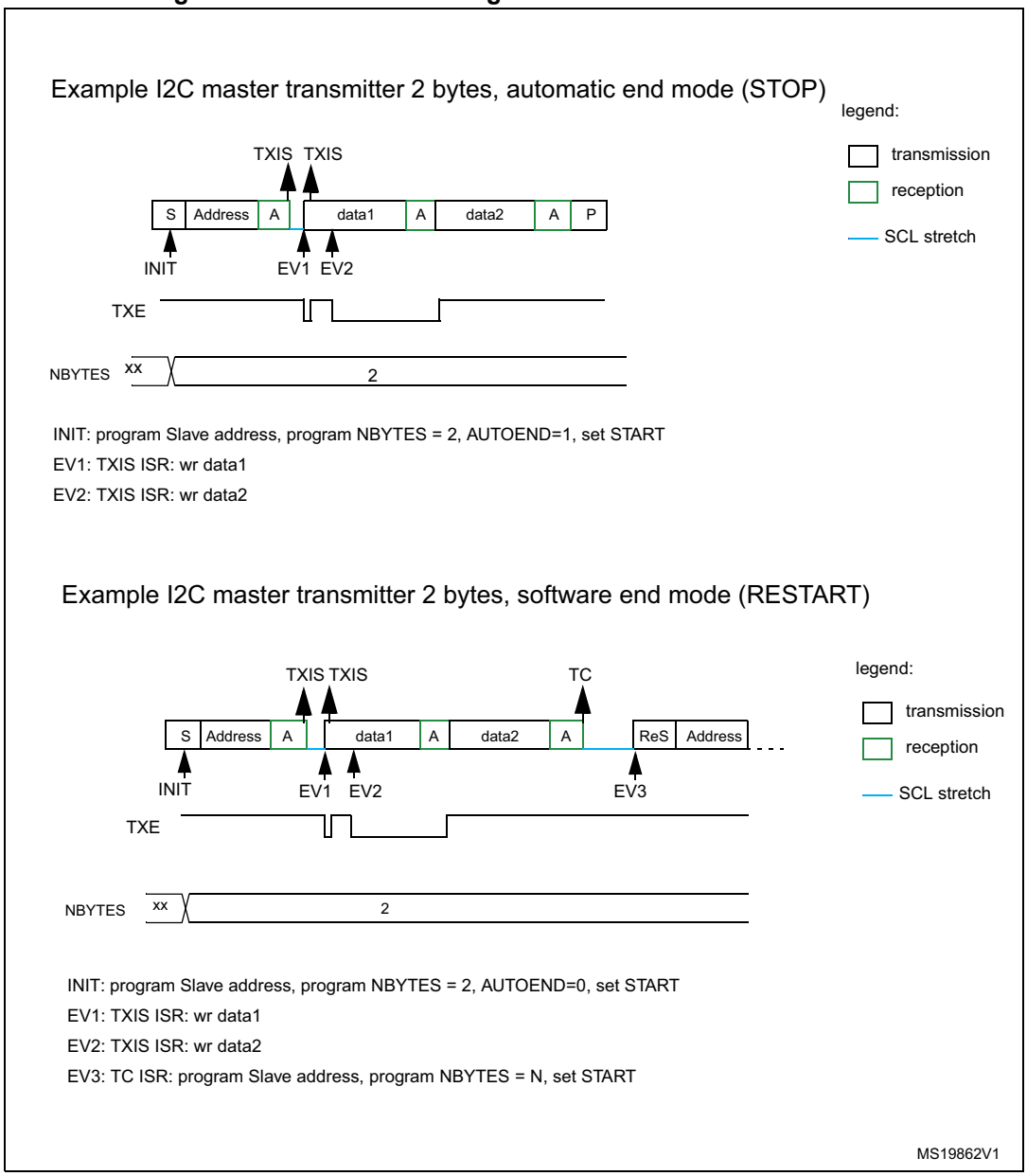

Master receiver

In the case of a read transfer, the RXNE flag is set after each byte reception, after the 8th SCL pulse. An RXNE event generates an interrupt if the RXIE bit is set in the I2C_CR1 register. The flag is cleared when I2C_RXDR is read.

If the total number of data bytes to be received is greater than 255, reload mode must be selected by setting the RELOAD bit in the I2C_CR2 register. In this case, when

NBYTES[7:0] data have been transferred, the TCR flag is set and the SCL line is stretched low until NBYTES[7:0] is written to a non-zero value.

- When RELOAD=0 and NBYTES[7:0] data have been transferred:
  - In automatic end mode (AUTOEND=1), a NACK and a STOP are automatically sent after the last received byte.
  - In software end mode (AUTOEND=0), a NACK is automatically sent after the last received byte, the TC flag is set and the SCL line is stretched low in order to allow software actions:

    A RESTART condition can be requested by setting the START bit in the I2C_CR2 register with the proper slave address configuration, and number of bytes to be transferred. Setting the START bit clears the TC flag and the START condition, followed by slave address, are sent on the bus.

    A STOP condition can be requested by setting the STOP bit in the I2C_CR2 register. Setting the STOP bit clears the TC flag and the STOP condition is sent on the bus.

Figure 346. Transfer sequence flowchart for I2C master receiver for N≤255 bytes

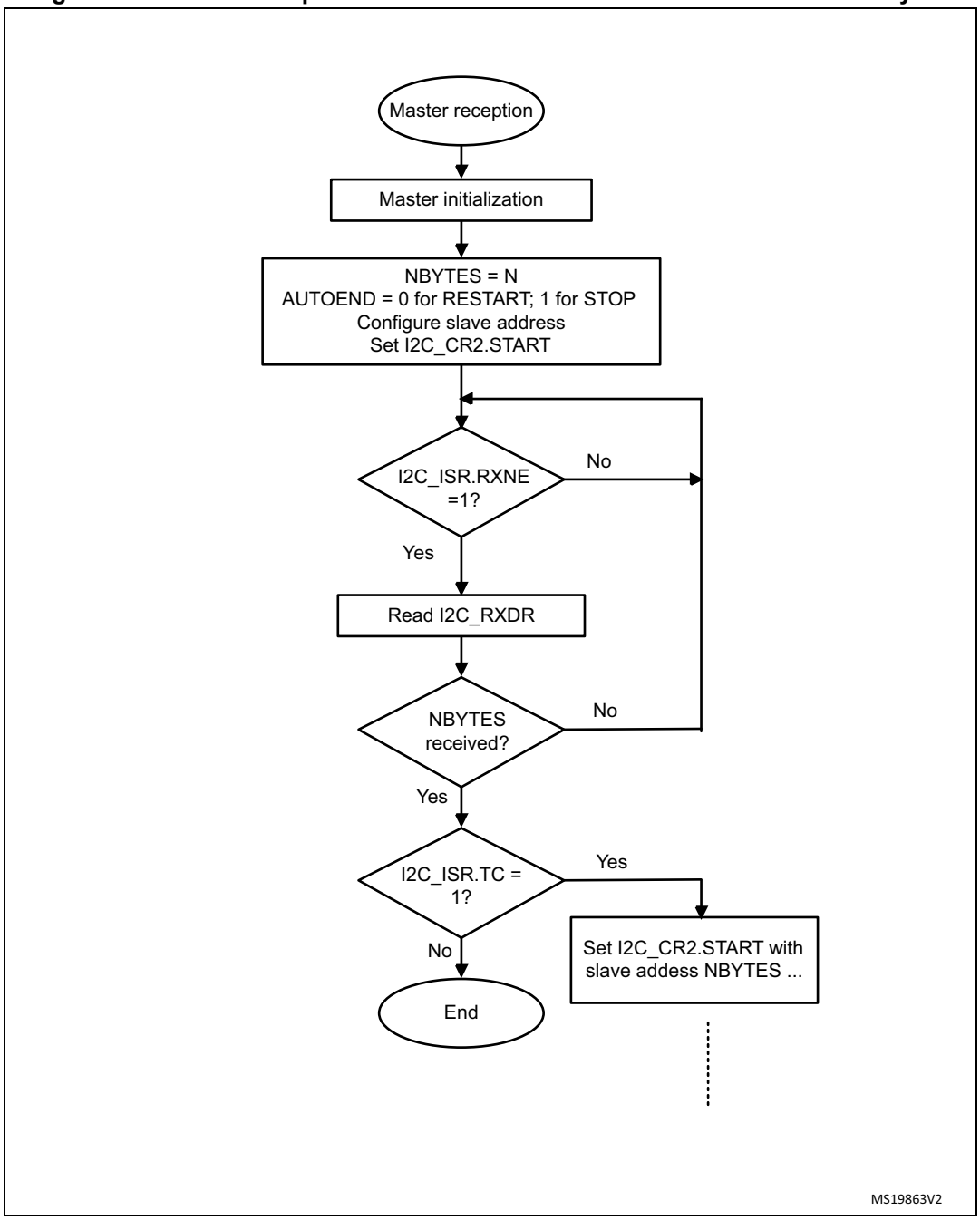

Figure 347. Transfer sequence flowchart for I2C master receiver for N >255 bytes

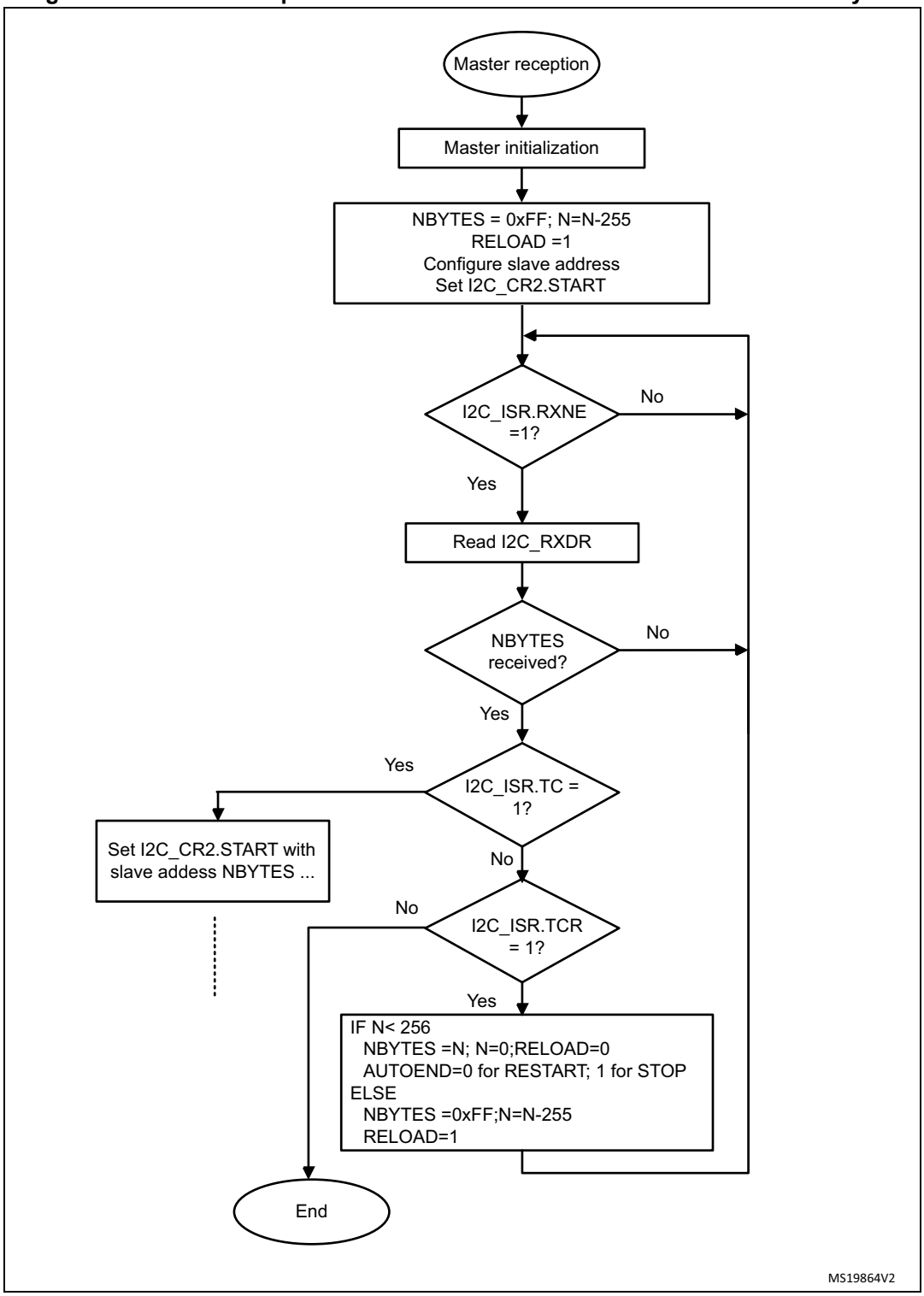

Figure 348. Transfer bus diagrams for I2C master receiver

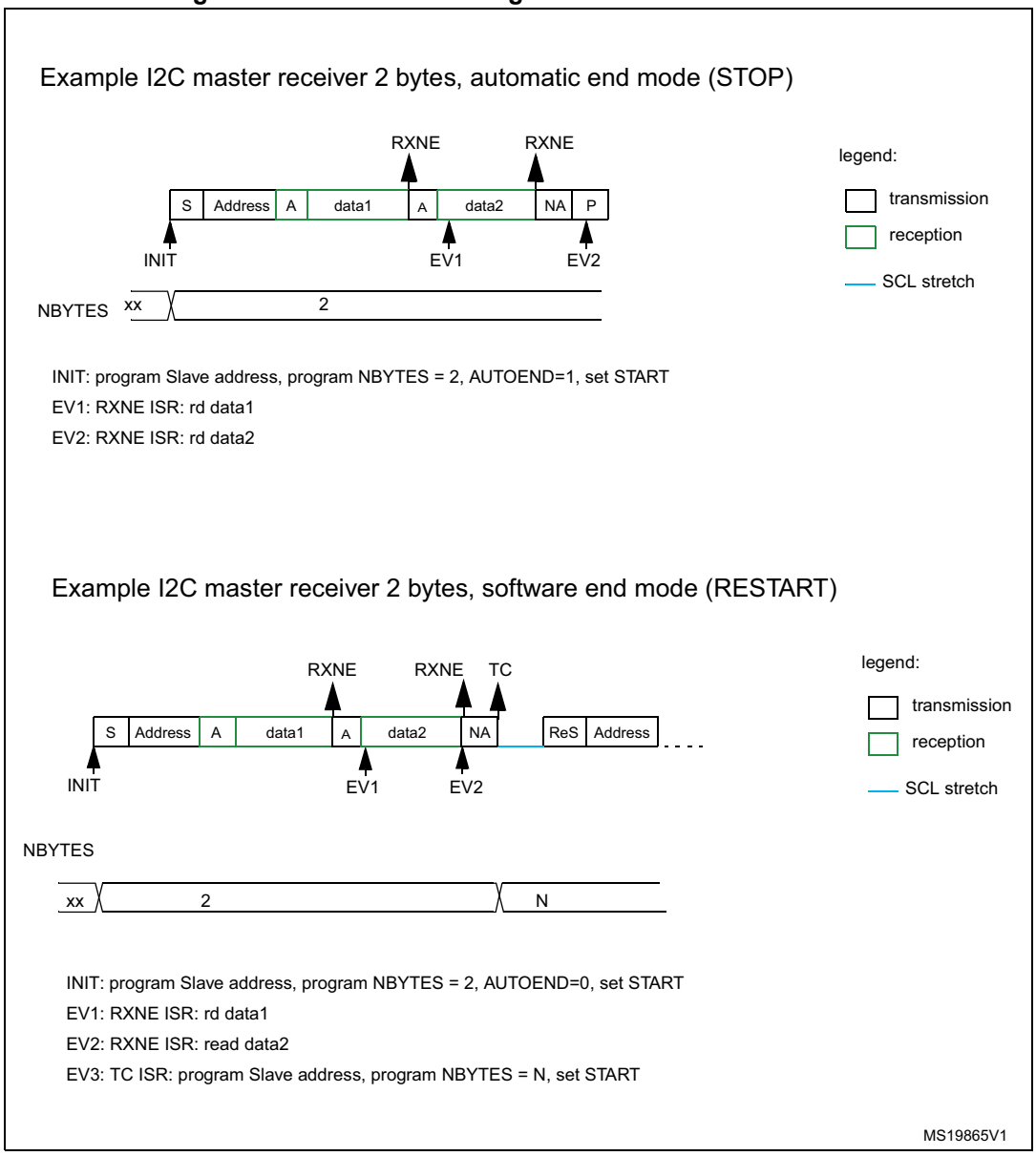

34.4.9 I2C_TIMINGR register configuration examples

The tables below provide examples of how to program the I2C_TIMINGR to obtain timings compliant with the I^2C specification. In order to get more accurate configuration values, please refer to the application note: *I^2C timing configuration tool* (AN4235) and the associated software STSW-STM32126.

Table 143. Examples of timings settings for f_{I2CCLK} = 8 MHz

Parameter	Standard-mode (Sm)		Fast-mode (Fm)	Fast-mode Plus (Fm+)
	10 kHz	100 kHz	400 kHz	500 kHz
PRESC	1	1	0	0
SCLL	0xC7	0x13	0x9	0x6
t_{SCLL}	200x250 ns = 50 µs	20x250 ns = 5.0 µs	10x125 ns = 1250 ns	7x125 ns = 875 ns
SCLH	0xC3	0xF	0x3	0x3
t_{SCLH}	196x250 ns = 49 µs	16x250 ns = 4.0µs	4x125ns = 500ns	4x125 ns = 500 ns
t_{SCL}(1)	~100 µs(2)	~10 µs(2)	~2500 ns(3)	~2000 ns(4)
SDADEL	0x2	0x2	0x1	0x0
t_{SDADEL}	2x250 ns = 500 ns	2x250 ns = 500 ns	1x125 ns = 125 ns	0 ns
SCLDEL	0x4	0x4	0x3	0x1
t_{SCLDEL}	5x250 ns = 1250 ns	5x250 ns = 1250 ns	4x125 ns = 500 ns	2x125 ns = 250 ns

1. SCL period t_{SCL} is greater than t_{SCLL} + t_{SCLH} due to SCL internal detection delay. Values provided for t_{SCL} are examples only.
2. t_{SYNC1} + t_{SYNC2} minimum value is 4 x t_{I2CCLK} = 500 ns. Example with t_{SYNC1} + t_{SYNC2} = 1000 ns
3. t_{SYNC1} + t_{SYNC2} minimum value is 4 x t_{I2CCLK} = 500 ns. Example with t_{SYNC1} + t_{SYNC2} = 750 ns
4. t_{SYNC1} + t_{SYNC2} minimum value is 4 x t_{I2CCLK} = 500 ns. Example with t_{SYNC1} + t_{SYNC2} = 655 ns

Table 144. Examples of timings settings for f_{I2CCLK} = 16 MHz

Parameter	Standard-mode (Sm)		Fast-mode (Fm)	Fast-mode Plus (Fm+)
	10 kHz	100 kHz	400 kHz	1000 kHz
PRESC	3	3	1	0
SCLL	0xC7	0x13	0x9	0x4
t_{SCLL}	200 x 250 ns = 50 µs	20 x 250 ns = 5.0 µs	10 x 125 ns = 1250 ns	5 x 62.5 ns = 312.5 ns
SCLH	0xC3	0xF	0x3	0x2
t_{SCLH}	196 x 250 ns = 49 µs	16 x 250 ns = 4.0 µs	4 x 125ns = 500 ns	3 x 62.5 ns = 187.5 ns
t_{SCL}(1)	~100 µs(2)	~10 µs(2)	~2500 ns(3)	~1000 ns(4)
SDADEL	0x2	0x2	0x2	0x0
t_{SDADEL}	2 x 250 ns = 500 ns	2 x 250 ns = 500 ns	2 x 125 ns = 250 ns	0 ns
SCLDEL	0x4	0x4	0x3	0x2
t_{SCLDEL}	5 x 250 ns = 1250 ns	5 x 250 ns = 1250 ns	4 x 125 ns = 500 ns	3 x 62.5 ns = 187.5 ns

1. SCL period t_{SCL} is greater than t_{SCLL} + t_{SCLH} due to SCL internal detection delay. Values provided for t_{SCL} are examples only.
2. t_{SYNC1} + t_{SYNC2} minimum value is 4 x t_{I2CCLK} = 250 ns. Example with t_{SYNC1} + t_{SYNC2} = 1000 ns
3. t_{SYNC1} + t_{SYNC2} minimum value is 4 x t_{I2CCLK} = 250 ns. Example with t_{SYNC1} + t_{SYNC2} = 750 ns
4. t_{SYNC1} + t_{SYNC2} minimum value is 4 x t_{I2CCLK} = 250 ns. Example with t_{SYNC1} + t_{SYNC2} = 500 ns

Table 145. Examples of timings settings for f_{I2CCLK} = 48 MHz

Parameter	Standard-mode (Sm)		Fast-mode (Fm)	Fast-mode Plus (Fm+)
	10 kHz	100 kHz	400 kHz	1000 kHz
PRESC	0xB	0xB	5	5
SCLL	0xC7	0x13	0x9	0x3
t_{SCLL}	200 x 250 ns = 50 µs	20 x 250 ns = 5.0 µs	10 x 125 ns = 1250 ns	4 x 125 ns = 500 ns
SCLH	0xC3	0xF	0x3	0x1
t_{SCLH}	196 x 250 ns = 49 µs	16 x 250 ns = 4.0 µs	4 x 125 ns = 500 ns	2 x 125 ns = 250 ns
t_{SCL}(1)	~100 µs(2)	~10 µs(2)	~2500 ns(3)	~875 ns(4)
SDADEL	0x2	0x2	0x3	0x0
t_{SDADEL}	2 x 250 ns = 500 ns	2 x 250 ns = 500 ns	3 x 125 ns = 375 ns	0 ns
SCLDEL	0x4	0x4	0x3	0x1
t_{SCLDEL}	5 x 250 ns = 1250 ns	5 x 250 ns = 1250 ns	4 x 125 ns = 500 ns	2 x 125 ns = 250 ns

1. The SCL period t_{SCL} is greater than t_{SCLL} + t_{SCLH} due to the SCL internal detection delay. Values provided for t_{SCL} are only examples.
2. t_{SYNC1} + t_{SYNC2} minimum value is 4x t_{I2CCLK} = 83.3 ns. Example with t_{SYNC1} + t_{SYNC2} = 1000 ns
3. t_{SYNC1} + t_{SYNC2} minimum value is 4x t_{I2CCLK} = 83.3 ns. Example with t_{SYNC1} + t_{SYNC2} = 750 ns
4. t_{SYNC1} + t_{SYNC2} minimum value is 4x t_{I2CCLK} = 83.3 ns. Example with t_{SYNC1} + t_{SYNC2} = 250 ns

34.4.10 SMBus specific features

This section is relevant only when SMBus feature is supported. Please refer to *Section 34.3: I2C implementation*.

Introduction

The System Management Bus (SMBus) is a two-wire interface through which various devices can communicate with each other and with the rest of the system. It is based on I^2C principles of operation. SMBus provides a control bus for system and power management related tasks.

This peripheral is compatible with the SMBUS specification rev 2.0 (http://smbus.org).

The System Management Bus Specification refers to three types of devices.

- A slave is a device that receives or responds to a command.
- A master is a device that issues commands, generates the clocks and terminates the transfer.
- A host is a specialized master that provides the main interface to the system's CPU. A host must be a master-slave and must support the SMBus host notify protocol. Only one host is allowed in a system.

This peripheral can be configured as master or slave device, and also as a host.

SMBUS is based on I^{2}C specification rev 2.1.

Bus protocols

There are eleven possible command protocols for any given device. A device may use any or all of the eleven protocols to communicate. The protocols are Quick Command, Send Byte, Receive Byte, Write Byte, Write Word, Read Byte, Read Word, Process Call, Block Read, Block Write and Block Write-Block Read Process Call. These protocols should be implemented by the user software.

For more details of these protocols, refer to SMBus specification version 2.0 (http://smbus.org).

Address resolution protocol (ARP)

SMBus slave address conflicts can be resolved by dynamically assigning a new unique address to each slave device. In order to provide a mechanism to isolate each device for the purpose of address assignment each device must implement a unique device identifier (UDID). This 128-bit number is implemented by software.

This peripheral supports the Address Resolution Protocol (ARP). The SMBus Device Default Address (0b1100 001) is enabled by setting SMBDEN bit in I2C_CR1 register. The ARP commands should be implemented by the user software.

Arbitration is also performed in slave mode for ARP support.

For more details of the SMBus Address Resolution Protocol, refer to SMBus specification version 2.0 (http://smbus.org).

Received Command and Data acknowledge control

A SMBus receiver must be able to NACK each received command or data. In order to allow the ACK control in slave mode, the Slave Byte Control mode must be enabled by setting SBC bit in I2C_CR1 register. Refer to *Slave Byte Control mode on page 977* for more details.

Host Notify protocol

This peripheral supports the Host Notify protocol by setting the SMBHEN bit in the I2C_CR1 register. In this case the host will acknowledge the SMBus Host address (0b0001 000).

When this protocol is used, the device acts as a master and the host as a slave.

SMBus alert

The SMBus ALERT optional signal is supported. A slave-only device can signal the host through the SMBALERT# pin that it wants to talk. The host processes the interrupt and simultaneously accesses all SMBALERT# devices through the Alert Response Address (0b0001 100). Only the device(s) which pulled SMBALERT# low will acknowledge the Alert Response Address.

When configured as a slave device(SMBHEN=0), the SMBA pin is pulled low by setting the ALERTEN bit in the I2C_CR1 register. The Alert Response Address is enabled at the same time.

When configured as a host (SMBHEN=1), the ALERT flag is set in the I2C_ISR register when a falling edge is detected on the SMBA pin and ALERTEN=1. An interrupt is generated if the ERRIE bit is set in the I2C_CR1 register. When ALERTEN=0, the ALERT line is considered high even if the external SMBA pin is low.

If the SMBus ALERT pin is not needed, the SMBA pin can be used as a standard GPIO if ALERTEN=0.

Packet error checking

A packet error checking mechanism has been introduced in the SMBus specification to improve reliability and communication robustness. Packet Error Checking is implemented by appending a Packet Error Code (PEC) at the end of each message transfer. The PEC is calculated by using the $C(x) = x_8 + x^2 + x + 1$ CRC-8 polynomial on all the message bytes (including addresses and read/write bits).

The peripheral embeds a hardware PEC calculator and allows to send a Not Acknowledge automatically when the received byte does not match with the hardware calculated PEC.

Timeouts

This peripheral embeds hardware timers in order to be compliant with the 3 timeouts defined in SMBus specification version 2.0.

Table 146. SMBus timeout specifications

Symbol	Parameter	Limits		Unit
		Min	Max	
$t_{TIMEOUT}$	Detect clock low timeout	25	35	ms
$t_{LOW:SEXT}$(1)	Cumulative clock low extend time (slave device)	-	25	ms
$t_{LOW:MEXT}$(2)	Cumulative clock low extend time (master device)	-	10	ms

1. $t_{LOW:SEXT}$ is the cumulative time a given slave device is allowed to extend the clock cycles in one message from the initial START to the STOP. It is possible that, another slave device or the master will also extend the clock causing the combined clock low extend time to be greater than $t_{LOW:SEXT}$. Therefore, this parameter is measured with the slave device as the sole target of a full-speed master.

2. $t_{LOW:MEXT}$ is the cumulative time a master device is allowed to extend its clock cycles within each byte of a message as defined from START-to-ACK, ACK-to-ACK, or ACK-to-STOP. It is possible that a slave device or another master will also extend the clock causing the combined clock low time to be greater than $t_{LOW:MEXT}$ on a given byte. Therefore, this parameter is measured with a full speed slave device as the sole target of the master.

Figure 349. Timeout intervals for $t_{LOW:SEXT}$, $t_{LOW:MEXT}$

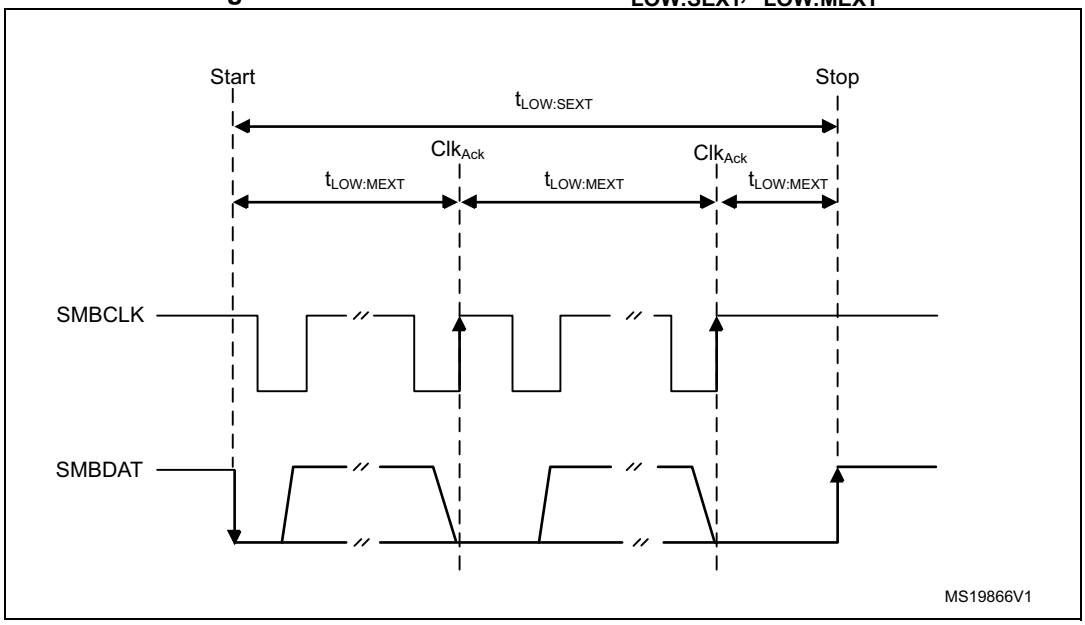

Bus idle detection

A master can assume that the bus is free if it detects that the clock and data signals have been high for t_{IDLE} greater than $t_{HIGH,MAX}$. (refer to *Table 142: I2C-SMBUS specification clock timings*)

This timing parameter covers the condition where a master has been dynamically added to the bus and may not have detected a state transition on the SMBCLK or SMBDAT lines. In this case, the master must wait long enough to ensure that a transfer is not currently in progress. The peripheral supports a hardware bus idle detection.

34.4.11 SMBus initialization

This section is relevant only when SMBus feature is supported. Please refer to *Section 34.3: I2C implementation*.

In addition to I2C initialization, some other specific initialization must be done in order to perform SMBus communication:

Received Command and Data Acknowledge control (Slave mode)

A SMBus receiver must be able to NACK each received command or data. In order to allow ACK control in slave mode, the Slave Byte Control mode must be enabled by setting the SBC bit in the I2C_CR1 register. Refer to *Slave Byte Control mode on page 977* for more details.

Specific address (Slave mode)

The specific SMBus addresses should be enabled if needed. Refer to *Bus idle detection on page 1000* for more details.

- The SMBus Device Default address (0b1100 001) is enabled by setting the SMBDEN bit in the I2C_CR1 register.
- The SMBus Host address (0b0001 000) is enabled by setting the SMBHEN bit in the I2C_CR1 register.
- The Alert Response Address (0b0001100) is enabled by setting the ALERTEN bit in the I2C_CR1 register.

Packet error checking

PEC calculation is enabled by setting the PECEN bit in the I2C_CR1 register. Then the PEC transfer is managed with the help of a hardware byte counter: NBYTES[7:0] in the I2C_CR2 register. The PECEN bit must be configured before enabling the I2C.

The PEC transfer is managed with the hardware byte counter, so the SBC bit must be set when interfacing the SMBus in slave mode. The PEC is transferred after NBYTES-1 data have been transferred when the PECBYTE bit is set and the RELOAD bit is cleared. If RELOAD is set, PECBYTE has no effect.

Caution: Changing the PECEN configuration is not allowed when the I2C is enabled.

Table 147. SMBUS with PEC configuration

Mode	SBC bit	RELOAD bit	AUTOEND bit	PECBYTE bit
Master Tx/Rx NBYTES + PEC+ STOP	x	0	1	1
Master Tx/Rx NBYTES + PEC + ReSTART	x	0	0	1
Slave Tx/Rx with PEC	1	0	x	1

Timeout detection

The timeout detection is enabled by setting the TIMOUTEN and TEXTEN bits in the I2C_TIMEOUTR register. The timers must be programmed in such a way that they detect a timeout before the maximum time given in the SMBus specification version 2.0.

- $t_{TIMEOUT}$ check

  In order to enable the $t_{TIMEOUT}$ check, the 12-bit TIMEOUTA[11:0] bits must be programmed with the timer reload value in order to check the $t_{TIMEOUT}$ parameter. The TIDLE bit must be configured to ‘0’ in order to detect the SCL low level timeout.

  Then the timer is enabled by setting the TIMOUTEN in the I2C_TIMEOUTR register.

  If SCL is tied low for a time greater than (TIMEOUTA+1) x 2048 x t_{I2CCLK}, the TIMEOUT flag is set in the I2C_ISR register.

  Refer to *Table 148: Examples of TIMEOUTA settings for various I2CCLK frequencies (max tTIMEOUT = 25 ms)*.

Caution: Changing the TIMEOUTA[11:0] bits and TIDLE bit configuration is not allowed when the TIMEOUTEN bit is set.

- $t_{LOW:SEXT}$ and $t_{LOW:MEXT}$ check

  Depending on if the peripheral is configured as a master or as a slave, The 12-bit TIMEOUTB timer must be configured in order to check $t_{LOW:SEXT}$ for a slave and $t_{LOW:MEXT}$ for a master. As the standard specifies only a maximum, the user can choose the same value for the both.

  Then the timer is enabled by setting the TEXTEN bit in the I2C_TIMEOUTR register.

  If the SMBus peripheral performs a cumulative SCL stretch for a time greater than (TIMEOUTB+1) x 2048 x t_{I2CCLK}, and in the timeout interval described in *Bus idle detection on page 1000* section, the TIMEOUT flag is set in the I2C_ISR register.

  Refer to *Table 149: Examples of TIMEOUTB settings for various I2CCLK frequencies*

Caution: Changing the TIMEOUTB configuration is not allowed when the TEXTEN bit is set.

Bus Idle detection

In order to enable the t_{IDLE} check, the 12-bit TIMEOUTA[11:0] field must be programmed with the timer reload value in order to obtain the t_{IDLE} parameter. The TIDLE bit must be configured to ‘1 in order to detect both SCL and SDA high level timeout.

Then the timer is enabled by setting the TIMOUTEN bit in the I2C_TIMEOUTR register.

If both the SCL and SDA lines remain high for a time greater than (TIMEOUTA+1) x 4 x t_{I2CCLK}, the TIMEOUT flag is set in the I2C_ISR register.

Refer to *Table 150: Examples of TIMEOUTA settings for various I2CCLK frequencies (max tIDLE = 50 µs)*

Caution: Changing the TIMEOUTA and TIDLE configuration is not allowed when the TIMEOUTEN is set.

34.4.12 SMBus: I2C_TIMEOUTR register configuration examples

This section is relevant only when SMBus feature is supported. Please refer to *Section 34.3: I2C implementation*.

- Configuring the maximum duration of $t_{TIMEOUT}$ to 25 ms:

Table 148. Examples of TIMEOUTA settings for various I2CCLK frequencies (max $t_{TIMEOUT}$ = 25 ms)

f_{I2CCLK}	TIMEOUTA[11:0] bits	TIDLE bit	TIMEOUTEN bit	$t_{TIMEOUT}$
8 MHz	0x61	0	1	98 x 2048 x 125 ns = 25 ms
16 MHz	0xC3	0	1	196 x 2048 x 62.5 ns = 25 ms
48 MHz	0x249	0	1	586 x 2048 x 20.08 ns = 25 ms

- Configuring the maximum duration of $t_{LOW:SEXT}$ and $t_{LOW:MEXT}$ to 8 ms:

Table 149. Examples of TIMEOUTB settings for various I2CCLK frequencies

f_{I2CCLK}	TIMEOUTB[11:0] bits	TEXTEN bit	$t_{LOW:EXT}$
8 MHz	0x1F	1	32 x 2048 x 125 ns = 8 ms
16 MHz	0x3F	1	64 x 2048 x 62.5 ns = 8 ms
48 MHz	0xBB	1	188 x 2048 x 20.08 ns = 8 ms

- Configuring the maximum duration of t_{IDLE} to 50 µs

Table 150. Examples of TIMEOUTA settings for various I2CCLK frequencies (max t_{IDLE} = 50 µs)

f_{I2CCLK}	TIMEOUTA[11:0] bits	TIDLE bit	TIMEOUTEN bit	t_{TIDLE}
8 MHz	0x63	1	1	100 x 4 x 125 ns = 50 µs
16 MHz	0xC7	1	1	200 x 4 x 62.5 ns = 50 µs
48 MHz	0x257	1	1	600 x 4 x 20.08 ns = 50 µs

34.4.13 SMBus slave mode

This section is relevant only when SMBus feature is supported. Please refer to *Section 34.3: I2C implementation*.

In addition to 2C slave transfer management (refer to *Section 34.4.7: I2C slave mode*) some additional software flowcharts are provided to support SMBus.

SMBus Slave transmitter

When the IP is used in SMBus, SBC must be programmed to ‘1’ in order to allow the PEC transmission at the end of the programmed number of data bytes. When the PECBYTE bit is set, the number of bytes programmed in NBYTES[7:0] includes the PEC transmission. In that case the total number of TXIS interrupts will be NBYTES-1 and the content of the I2C_PECR register is automatically transmitted if the master requests an extra byte after the NBYTES-1 data transfer.

Caution: The PECBYTE bit has no effect when the RELOAD bit is set.

Figure 350. Transfer sequence flowchart for SMBus slave transmitter N bytes + PEC

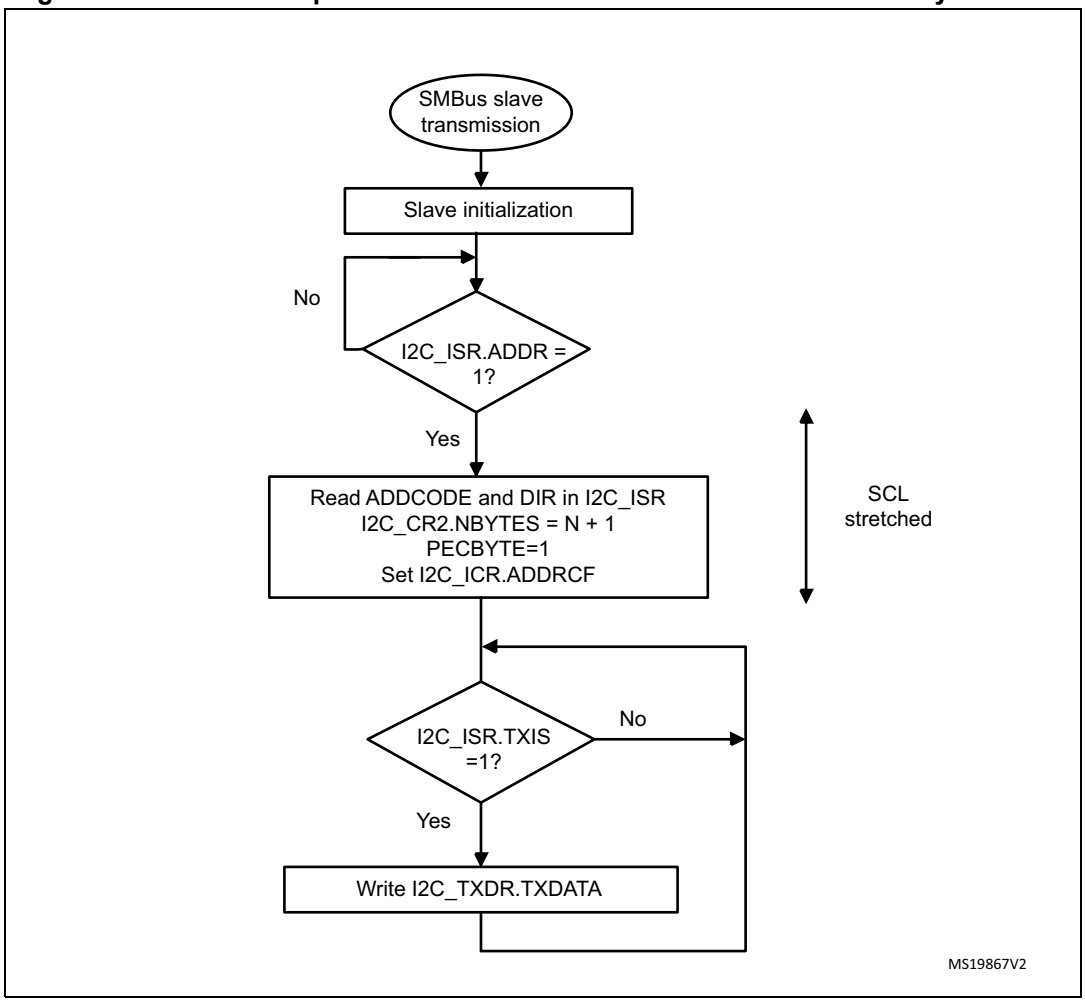

Figure 351. Transfer bus diagrams for SMBus slave transmitter (SBC=1)

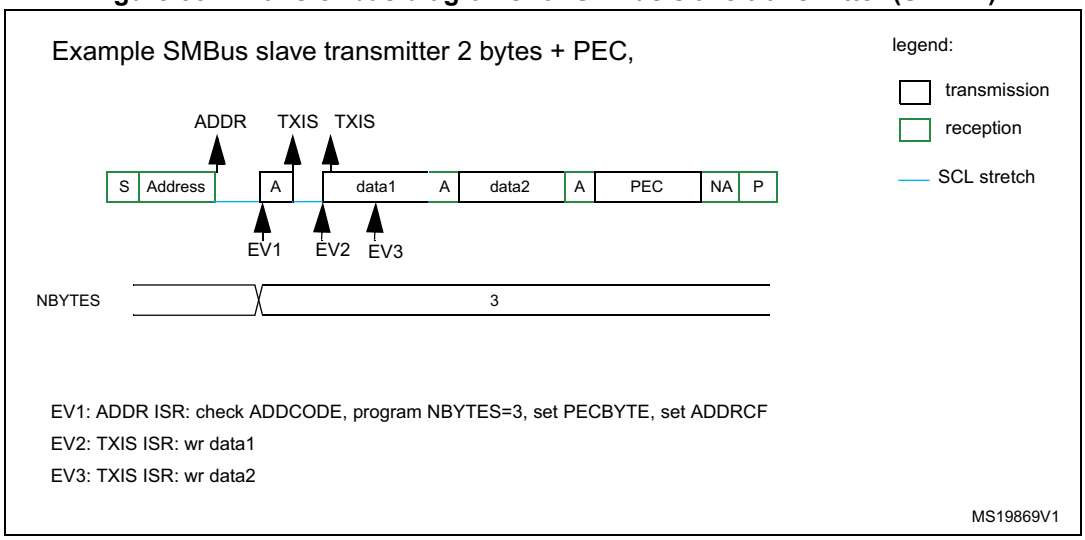

SMBus Slave receiver

When the I2C is used in SMBus mode, SBC must be programmed to '1' in order to allow the PEC checking at the end of the programmed number of data bytes. In order to allow the ACK control of each byte, the reload mode must be selected (RELOAD=1). Refer to *Slave Byte Control mode on page 977* for more details.

In order to check the PEC byte, the RELOAD bit must be cleared and the PECBYTE bit must be set. In this case, after NBYTES-1 data have been received, the next received byte is compared with the internal I2C_PECR register content. A NACK is automatically generated if the comparison does not match, and an ACK is automatically generated if the comparison matches, whatever the ACK bit value. Once the PEC byte is received, it is copied into the I2C_RXDR register like any other data, and the RXNE flag is set.

In the case of a PEC mismatch, the PECERR flag is set and an interrupt is generated if the ERRIE bit is set in the I2C_CR1 register.

If no ACK software control is needed, the user can program PECBYTE=1 and, in the same write operation, program NBYTES with the number of bytes to be received in a continuous flow. After NBYTES-1 are received, the next received byte is checked as being the PEC.

Caution: The PECBYTE bit has no effect when the RELOAD bit is set.

Figure 352. Transfer sequence flowchart for SMBus slave receiver N Bytes + PEC

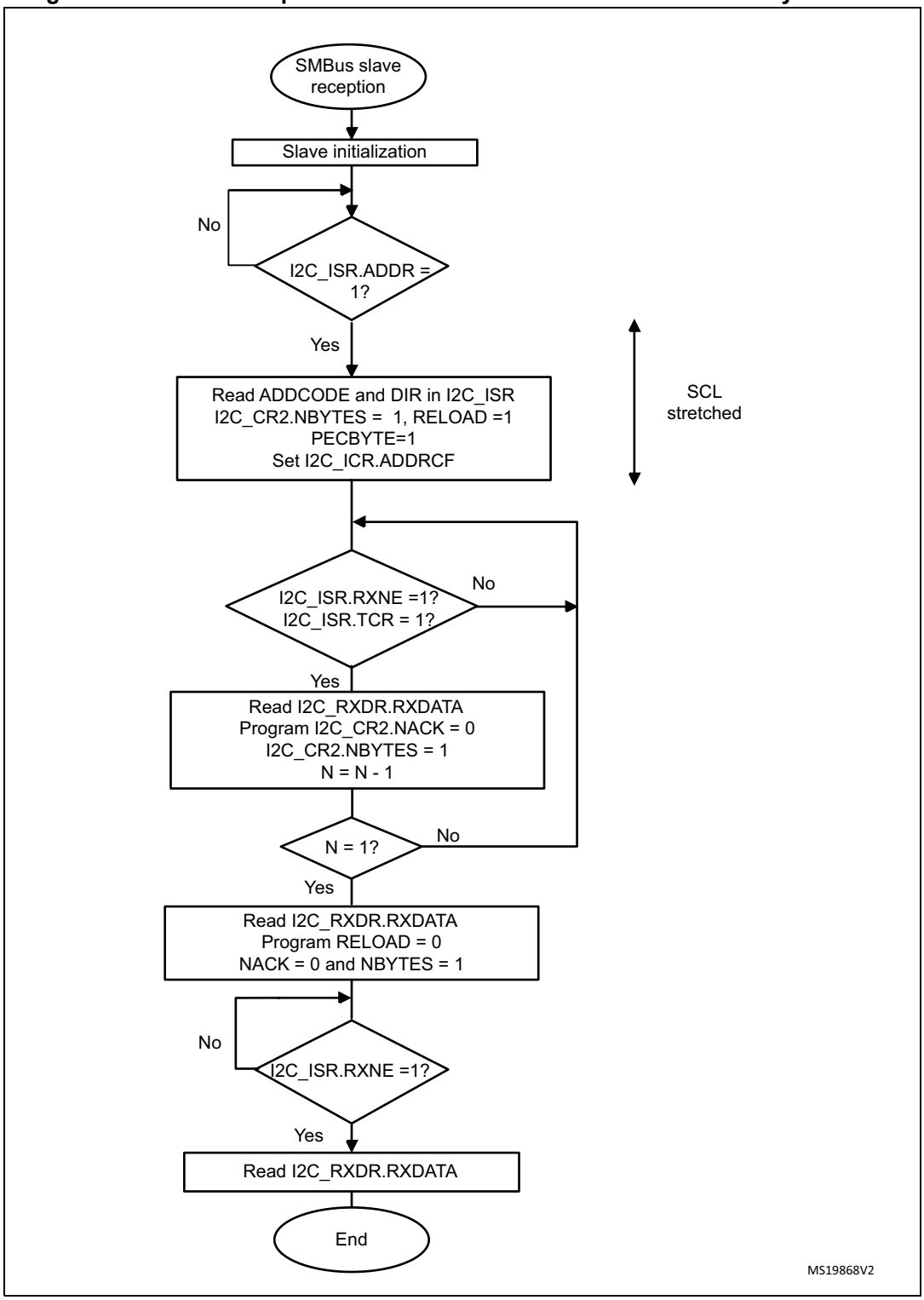

Figure 353. Bus transfer diagrams for SMBus slave receiver (SBC=1)

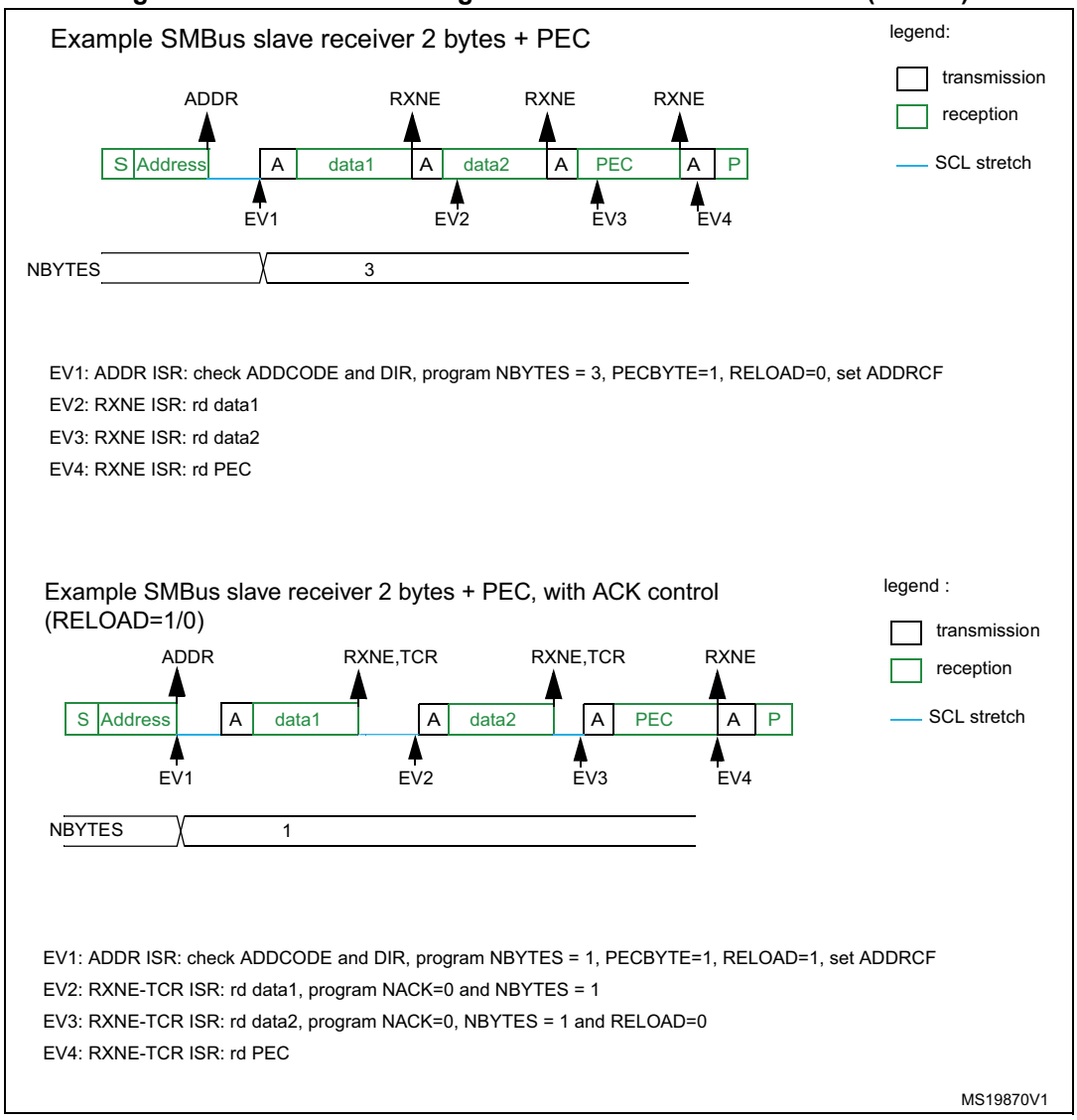

This section is relevant only when SMBus feature is supported. Please refer to *Section 34.3: I2C implementation*.

In addition to I2C master transfer management (refer to *Section 34.4.8: I2C master mode*) some additional software flowcharts are provided to support SMBus.

SMBus Master transmitter

When the SMBus master wants to transmit the PEC, the PECBYTE bit must be set and the number of bytes must be programmed in the NBYTES[7:0] field, before setting the START bit. In this case the total number of TXIS interrupts will be NBYTES-1. So if the PECBYTE bit is set when NBYTES=0x1, the content of the I2C_PECR register is automatically transmitted.

If the SMBus master wants to send a STOP condition after the PEC, automatic end mode should be selected (AUTOEND=1). In this case, the STOP condition automatically follows the PEC transmission.

When the SMBus master wants to send a RESTART condition after the PEC, software mode must be selected (AUTOEND=0). In this case, once NBYTES-1 have been transmitted, the I2C_PECR register content is transmitted and the TC flag is set after the PEC transmission, stretching the SCL line low. The RESTART condition must be programmed in the TC interrupt subroutine.

Caution: The PECBYTE bit has no effect when the RELOAD bit is set.

Figure 354. Bus transfer diagrams for SMBus master transmitter

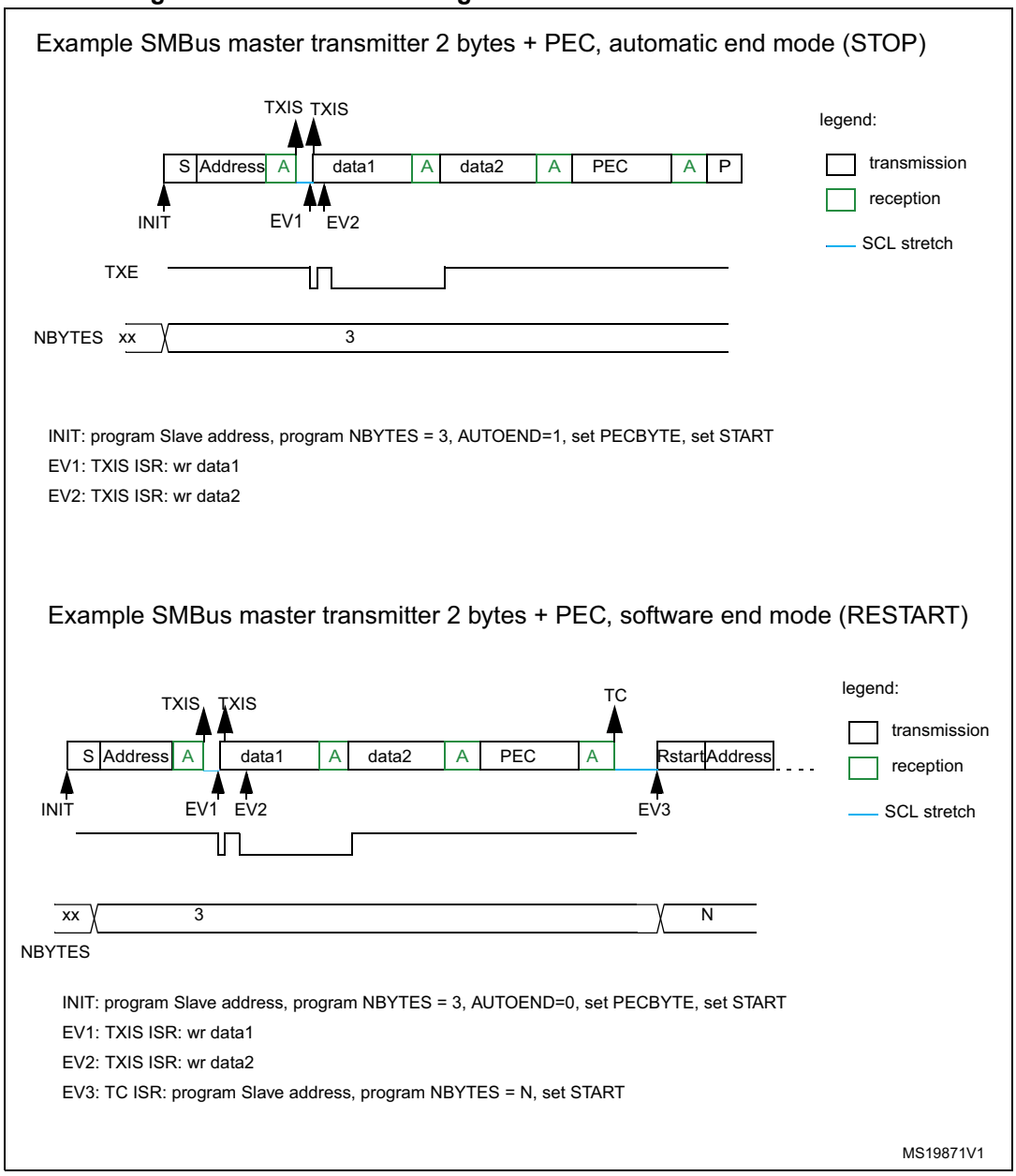

SMBus Master receiver

When the SMBus master wants to receive the PEC followed by a STOP at the end of the transfer, automatic end mode can be selected (AUTOEND=1). The PECBYTE bit must be set and the slave address must be programmed, before setting the START bit. In this case, after NBYTES-1 data have been received, the next received byte is automatically checked versus the I2C_PECR register content. A NACK response is given to the PEC byte, followed by a STOP condition.

When the SMBus master receiver wants to receive the PEC byte followed by a RESTART condition at the end of the transfer, software mode must be selected (AUTOEND=0). The PECBYTE bit must be set and the slave address must be programmed, before setting the START bit. In this case, after NBYTES-1 data have been received, the next received byte is automatically checked versus the I2C_PECR register content. The TC flag is set after the PEC byte reception, stretching the SCL line low. The RESTART condition can be programmed in the TC interrupt subroutine.

Caution: The PECBYTE bit has no effect when the RELOAD bit is set.

Figure 355. Bus transfer diagrams for SMBus master receiver

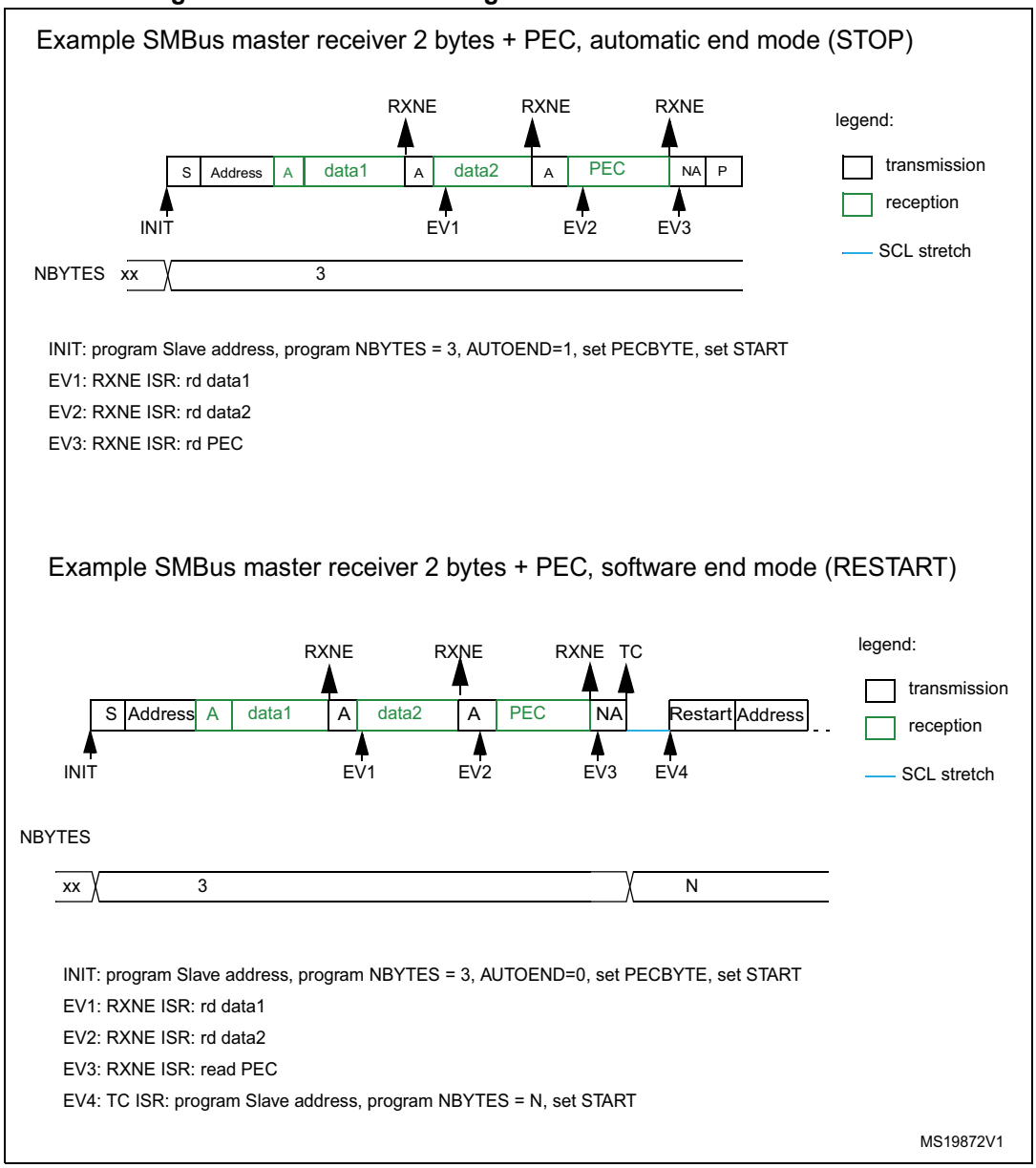

34.4.14 Wakeup from Stop mode on address match

This section is relevant only when Wakeup from Stop mode feature is supported. Please refer to *Section 34.3: I2C implementation*.

The I2C is able to wakeup the MCU from Stop mode (APB clock is off), when it is addressed. All addressing modes are supported.

Wakeup from Stop mode is enabled by setting the WUPEN bit in the I2C_CR1 register. The HSI16 oscillator must be selected as the clock source for I2CCLK in order to allow wakeup from Stop mode.

During Stop mode, the HSI16 is switched off. When a START is detected, the I2C interface switches the HSI16 on, and stretches SCL low until HSI16 is woken up.

HSI16 is then used for the address reception.

In case of an address match, the I2C stretches SCL low during MCU wakeup time. The stretch is released when ADDR flag is cleared by software, and the transfer goes on normally.

If the address does not match, the HSI16 is switched off again and the MCU is not woken up.

Note: *If the I2C clock is the system clock, or if WUPEN = 0, the HSI16 oscillator is not switched on after a START is received.*

Only an ADDR interrupt can wakeup the MCU. Therefore do not enter Stop mode when the I2C is performing a transfer as a master, or as an addressed slave after the ADDR flag is set. This can be managed by clearing SLEEPDEEP bit in the ADDR interrupt routine and setting it again only after the STOPF flag is set.

Caution: The digital filter is not compatible with the wakeup from Stop mode feature. If the DNF bit is not equal to 0, setting the WUPEN bit has no effect.

Caution: This feature is available only when the I2C clock source is the HSI16 oscillator.

Caution: Clock stretching must be enabled (NOSTRETCH=0) to ensure proper operation of the wakeup from Stop mode feature.

Caution: If wakeup from Stop mode is disabled (WUPEN=0), the I2C peripheral must be disabled before entering Stop mode (PE=0).

34.4.15 Error conditions

The following are the error conditions which may cause communication to fail.

Bus error (BERR)

A bus error is detected when a START or a STOP condition is detected and is not located after a multiple of 9 SCL clock pulses. A START or a STOP condition is detected when a SDA edge occurs while SCL is high.

The bus error flag is set only if the I2C is involved in the transfer as master or addressed slave (i.e not during the address phase in slave mode).

In case of a misplaced START or RESTART detection in slave mode, the I2C enters address recognition state like for a correct START condition.

When a bus error is detected, the BERR flag is set in the I2C_ISR register, and an interrupt is generated if the ERRIE bit is set in the I2C_CR1 register.

Arbitration lost (ARLO)

An arbitration loss is detected when a high level is sent on the SDA line, but a low level is sampled on the SCL rising edge.

- In master mode, arbitration loss is detected during the address phase, data phase and data acknowledge phase. In this case, the SDA and SCL lines are released, the START control bit is cleared by hardware and the master switches automatically to slave mode.
- In slave mode, arbitration loss is detected during data phase and data acknowledge phase. In this case, the transfer is stopped, and the SCL and SDA lines are released.

When an arbitration loss is detected, the ARLO flag is set in the I2C_ISR register, and an interrupt is generated if the ERRIE bit is set in the I2C_CR1 register.

Overrun/underrun error (OVR)

An overrun or underrun error is detected in slave mode when NOSTRETCH=1 and:

- In reception when a new byte is received and the RXDR register has not been read yet. The new received byte is lost, and a NACK is automatically sent as a response to the new byte.
- In transmission:
  - When STOPF=1 and the first data byte should be sent. The content of the I2C_TXDR register is sent if TXE=0, 0xFF if not.
  - When a new byte should be sent and the I2C_TXDR register has not been written yet, 0xFF is sent.

When an overrun or underrun error is detected, the OVR flag is set in the I2C_ISR register, and an interrupt is generated if the ERRIE bit is set in the I2C_CR1 register.

Packet Error Checking Error (PECERR)

This section is relevant only when the SMBus feature is supported. Please refer to *Section 34.3: I2C implementation*.

A PEC error is detected when the received PEC byte does not match with the I2C_PECR register content. A NACK is automatically sent after the wrong PEC reception.

When a PEC error is detected, the PECERR flag is set in the I2C_ISR register, and an interrupt is generated if the ERRIE bit is set in the I2C_CR1 register.

Timeout Error (TIMEOUT)

This section is relevant only when the SMBus feature is supported. Please refer to *Section 34.3: I2C implementation*.

A timeout error occurs for any of these conditions:

- TIDLE=0 and SCL remained low for the time defined in the TIMEOUTA[11:0] bits: this is used to detect a SMBus timeout.
- TIDLE=1 and both SDA and SCL remained high for the time defined in the TIMEOUTA [11:0] bits: this is used to detect a bus idle condition.
- Master cumulative clock low extend time reached the time defined in the TIMEOUTB[11:0] bits (SMBus $t_{LOW:MEXT}$ parameter)
- Slave cumulative clock low extend time reached the time defined in TIMEOUTB[11:0] bits (SMBus $t_{LOW:SEXT}$ parameter)

When a timeout violation is detected in master mode, a STOP condition is automatically sent.

When a timeout violation is detected in slave mode, SDA and SCL lines are automatically released.

When a timeout error is detected, the TIMEOUT flag is set in the I2C_ISR register, and an interrupt is generated if the ERRIE bit is set in the I2C_CR1 register.

Alert (ALERT)

This section is relevant only when the SMBus feature is supported. Please refer to *Section 34.3: I2C implementation*.

The ALERT flag is set when the I2C interface is configured as a Host (SMBHEN=1), the alert pin detection is enabled (ALERTEN=1) and a falling edge is detected on the SMBA pin. An interrupt is generated if the ERRIE bit is set in the I2C_CR1 register.

34.4.16 DMA requests

Transmission using DMA

DMA (Direct Memory Access) can be enabled for transmission by setting the TXDMAEN bit in the I2C_CR1 register. Data is loaded from an SRAM area configured using the DMA peripheral (see *Section 11: Direct memory access controller (DMA) on page 281*) to the I2C_TXDR register whenever the TXIS bit is set.

Only the data are transferred with DMA.

- In master mode: the initialization, the slave address, direction, number of bytes and START bit are programmed by software (the transmitted slave address cannot be transferred with DMA). When all data are transferred using DMA, the DMA must be initialized before setting the START bit. The end of transfer is managed with the NBYTES counter. Refer to *Master transmitter on page 988*.
- In slave mode:
  - With NOSTRETCH=0, when all data are transferred using DMA, the DMA must be initialized before the address match event, or in ADDR interrupt subroutine, before clearing ADDR.
  - With NOSTRETCH=1, the DMA must be initialized before the address match event.
- For instances supporting SMBus: the PEC transfer is managed with NBYTES counter. Refer to *SMBus Slave transmitter on page 1003* and *SMBus Master transmitter on page 1007*.

Note: If DMA is used for transmission, the TXIE bit does not need to be enabled.

Reception using DMA

DMA (Direct Memory Access) can be enabled for reception by setting the RXDMAEN bit in the I2C_CR1 register. Data is loaded from the I2C_RXDR register to an SRAM area configured using the DMA peripheral (refer to *Section 11: Direct memory access controller (DMA) on page 281*) whenever the RXNE bit is set. Only the data (including PEC) are transferred with DMA.

- In master mode, the initialization, the slave address, direction, number of bytes and START bit are programmed by software. When all data are transferred using DMA, the

DMA must be initialized before setting the START bit. The end of transfer is managed with the NBYTES counter.

- In slave mode with NOSTRETCH=0, when all data are transferred using DMA, the DMA must be initialized before the address match event, or in the ADDR interrupt subroutine, before clearing the ADDR flag.
- If SMBus is supported (see *Section 34.3: I2C implementation*): the PEC transfer is managed with the NBYTES counter. Refer to *SMBus Slave receiver on page 1005* and *SMBus Master receiver on page 1009*.

Note: If DMA is used for reception, the RXIE bit does not need to be enabled.

34.4.17 Debug mode

When the microcontroller enters debug mode (core halted), the SMBus timeout either continues to work normally or stops, depending on the DBG_I2Cx_SMBUS_TIMEOUT configuration bits in the DBG module.

34.5 I2C low-power modes

Table 151. Effect of low-power modes on the I2C

Mode	Description
Sleep	No effect. I2C interrupts cause the device to exit the Sleep mode.
Low-power run	No effect.
Low-power sleep	No effect. I2C interrupts cause the device to exit the Low-power sleep mode.
Stop 0 / Stop 1	The I2C registers content is kept. If WUPEN = 1 and I2C is clocked by HSI16: the address recognition is functional. The I2C address match condition causes the device to exit the Stop 0 and Stop 1 modes. If WUPEN=0: the I2C must be disabled before entering Stop mode.
Stop 2	The I2C registers content is kept. The I2C1 and I2C2 must be disabled before entering Stop 2. If WUPEN=1 and I2C3 is clocked by HSI16: the I2C3 address recognition is functional. The I2C3 address match condition causes the device to exit the Stop mode 2. If WUPEN=0: the I2C3 must be disabled before entering Stop 2 mode.
Standby	The I2C peripheral is powered down and must be reinitialized after exiting Standby or Shutdown mode.
Shutdown	

34.6 I2C interrupts

The table below gives the list of I2C interrupt requests.

Table 152. I2C Interrupt requests

Interrupt event	Event flag	Event flag/Interrupt clearing method	Interrupt enable control bit
Receive buffer not empty	RXNE	Read I2C_RXDR register	RXIE
Transmit buffer interrupt status	TXIS	Write I2C_TXDR register	TXIE
Stop detection interrupt flag	STOPF	Write STOPCF=1	STOPIE
Transfer Complete Reload	TCR	Write I2C_CR2 with NBYTES[7:0] ≠ 0	TCIE
Transfer complete	TC	Write START=1 or STOP=1	
Address matched	ADDR	Write ADDRCF=1	ADDRIE
NACK reception	NACKF	Write NACKCF=1	NACKIE
Bus error	BERR	Write BERRCF=1	ERRIE
Arbitration loss	ARLO	Write ARLOCF=1	
Overrun/Underrun	OVR	Write OVRCF=1	
PEC error	PECERR	Write PECERRCF=1	
Timeout/t_{LOW} error	TIMEOUT	Write TIMEOUTCF=1	
SMBus Alert	ALERT	Write ALERTCF=1	

Depending on the product implementation, all these interrupts events can either share the same interrupt vector (I2C global interrupt), or be grouped into 2 interrupt vectors (I2C event interrupt and I2C error interrupt). Refer to *Table 45: STM32L431/433/443 vector table* for details.

In order to enable the I2C interrupts, the following sequence is required:

1. Configure and enable the I2C IRQ channel in the NVIC.
2. Configure the I2C to generate interrupts.

The I2C wakeup event is connected to the EXTI controller (refer to *Section 13: Extended interrupts and events controller (EXTI)*).

Figure 356. I2C interrupt mapping diagram

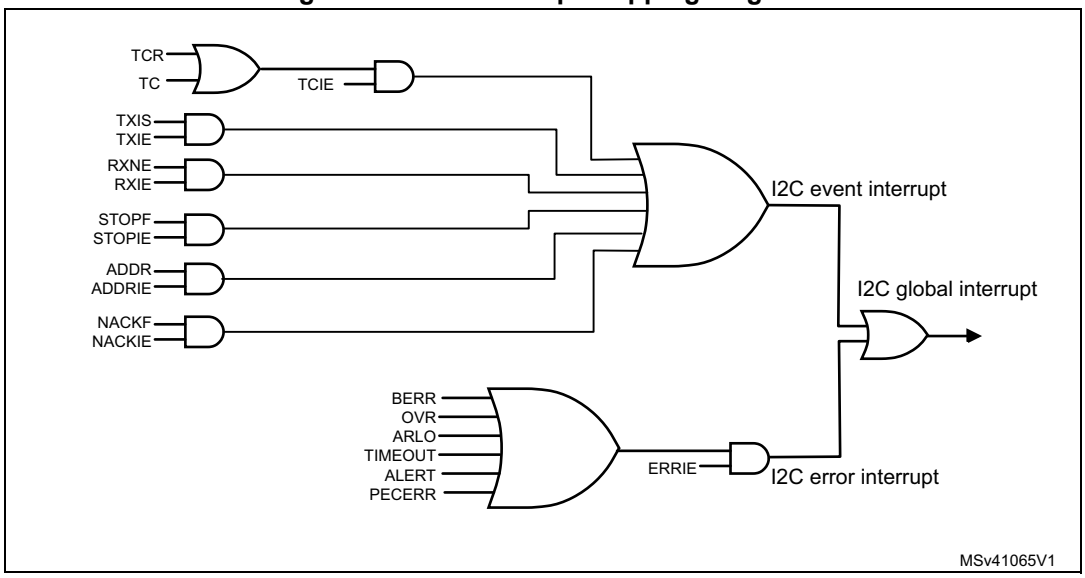

34.7 I2C registers

Refer to *Section 1.1 on page 55* for a list of abbreviations used in register descriptions.

The peripheral registers are accessed by words (32-bit).

34.7.1 Control register 1 (I2C_CR1)

Address offset: 0x00

Reset value: 0x0000 0000

Access: No wait states, except if a write access occurs while a write access to this register is ongoing. In this case, wait states are inserted in the second write access until the previous one is completed. The latency of the second write access can be up to 2 x PCLK1 + 6 x I2CCLK.

31	30	29	28	27	26	25	24	23	22	21	20	19	18	17	16
Res.	Res.	Res.	Res.	Res.	Res.	Res.	Res.	PECEN	ALERTEN	SMBDEN	SMBHEN	GCEN	WUPEN	NOSTRETCH	SBC
								rw	rw	rw	rw	rw		rw	rw

15	14	13	12	11	10	9	8	7	6	5	4	3	2	1	0
RXDMAEN	TXDMAEN	Res.	ANFOFF	DNF				ERRIE	TCIE	STOPIE	NACKIE	ADDRIE	RXIE	TXIE	PE
rw	rw		rw	rw				rw	rw	rw	rw	rw	rw	rw	rw

Bits 31:24 Reserved, must be kept at reset value.

Bit 23 **PECEN:** PEC enable

0: PEC calculation disabled

1: PEC calculation enabled

Note: If the SMBus feature is not supported, this bit is reserved and forced by hardware to '0'. Please refer to Section 34.3: I2C implementation.

Bit 22 **ALERTEN**: SMBus alert enable

Device mode (SMBHEN=0):

0: Releases SMBA pin high and Alert Response Address Header disabled: 0001100x followed by NACK.

1: Drives SMBA pin low and Alert Response Address Header enables: 0001100x followed by ACK.

Host mode (SMBHEN=1):

0: SMBus Alert pin (SMBA) not supported.

1: SMBus Alert pin (SMBA) supported.

Note: When ALERTEN=0, the SMBA pin can be used as a standard GPIO.

If the SMBus feature is not supported, this bit is reserved and forced by hardware to '0'. Please refer to Section 34.3: I2C implementation.

Bit 21 **SMBDEN**: SMBus Device Default address enable

0: Device default address disabled. Address 0b1100001x is NACKed.

1: Device default address enabled. Address 0b1100001x is ACKed.

Note: If the SMBus feature is not supported, this bit is reserved and forced by hardware to '0'. Please refer to Section 34.3: I2C implementation.

Bit 20 **SMBHEN**: SMBus Host address enable

0: Host address disabled. Address 0b0001000x is NACKed.

1: Host address enabled. Address 0b0001000x is ACKed.

Note: If the SMBus feature is not supported, this bit is reserved and forced by hardware to '0'. Please refer to Section 34.3: I2C implementation.

Bit 19 **GCEN**: General call enable

0: General call disabled. Address 0b00000000 is NACKed.

1: General call enabled. Address 0b00000000 is ACKed.

Bit 18 **WUPEN**: Wakeup from Stop mode enable

0: Wakeup from Stop mode disable.

1: Wakeup from Stop mode enable.

Note: If the Wakeup from Stop mode feature is not supported, this bit is reserved and forced by hardware to '0'. Please refer to Section 34.3: I2C implementation.

Note: WUPEN can be set only when DNF = '0000'

Bit 17 **NOSTRETCH**: Clock stretching disable

This bit is used to disable clock stretching in slave mode. It must be kept cleared in master mode.

0: Clock stretching enabled

1: Clock stretching disabled

Note: This bit can only be programmed when the I2C is disabled (PE = 0).

Bit 16 **SBC**: Slave byte control

This bit is used to enable hardware byte control in slave mode.

0: Slave byte control disabled

1: Slave byte control enabled

Bit 15 **RXDMAEN**: DMA reception requests enable
0: DMA mode disabled for reception
1: DMA mode enabled for reception

Bit 14 **TXDMAEN**: DMA transmission requests enable
0: DMA mode disabled for transmission
1: DMA mode enabled for transmission

Bit 13 Reserved, must be kept at reset value.

Bit 12 **ANFOFF:** Analog noise filter OFF
0: Analog noise filter enabled
1: Analog noise filter disabled
Note: This bit can only be programmed when the I2C is disabled (PE = 0).

Bits 11:8 **DNF[3:0]**: Digital noise filter
These bits are used to configure the digital noise filter on SDA and SCL input. The digital filter will filter spikes with a length of up to DNF[3:0] * t_{I2CCLK}
0000: Digital filter disabled
0001: Digital filter enabled and filtering capability up to 1 t_{I2CCLK}
...
1111: digital filter enabled and filtering capability up to15 t_{I2CCLK}
Note: If the analog filter is also enabled, the digital filter is added to the analog filter.
This filter can only be programmed when the I2C is disabled (PE = 0).

Bit 7 **ERRIE**: Error interrupts enable
0: Error detection interrupts disabled
1: Error detection interrupts enabled
Note: Any of these errors generate an interrupt:
Arbitration Loss (ARLO)
Bus Error detection (BERR)
Overrun/Underrun (OVR)
Timeout detection (TIMEOUT)
PEC error detection (PECERR)
Alert pin event detection (ALERT)

Bit 6 **TCIE**: Transfer Complete interrupt enable
0: Transfer Complete interrupt disabled
1: Transfer Complete interrupt enabled
Note: Any of these events will generate an interrupt:
Transfer Complete (TC)
Transfer Complete Reload (TCR)

Bit 5 **STOPIE**: STOP detection Interrupt enable
0: Stop detection (STOPF) interrupt disabled
1: Stop detection (STOPF) interrupt enabled

Bit 4 **NACKIE**: Not acknowledge received Interrupt enable
0: Not acknowledge (NACKF) received interrupts disabled
1: Not acknowledge (NACKF) received interrupts enabled

Bit 3 **ADDRIE**: Address match Interrupt enable (slave only)
0: Address match (ADDR) interrupts disabled
1: Address match (ADDR) interrupts enabled

Bit 2 **RXIE**: RX Interrupt enable
0: Receive (RXNE) interrupt disabled
1: Receive (RXNE) interrupt enabled

Bit 1 **TXIE**: TX Interrupt enable
0: Transmit (TXIS) interrupt disabled
1: Transmit (TXIS) interrupt enabled

Bit 0 **PE**: Peripheral enable
0: Peripheral disable
1: Peripheral enable

Note: When PE=0, the I2C SCL and SDA lines are released. Internal state machines and status bits are put back to their reset value. When cleared, PE must be kept low for at least 3 APB clock cycles.

34.7.2 Control register 2 (I2C_CR2)

Address offset: 0x04

Reset value: 0x0000 0000

Access: No wait states, except if a write access occurs while a write access to this register is ongoing. In this case, wait states are inserted in the second write access until the previous one is completed. The latency of the second write access can be up to 2 x PCLK1 + 6 x I2CCLK.

31	30	29	28	27	26	25	24	23	22	21	20	19	18	17	16
Res.	Res.	Res.	Res.	Res.	PEC BYTE	AUTO END	RE LOAD	NBYTES[7:0]							
					rs	rw	rw	rw							

15	14	13	12	11	10	9	8	7	6	5	4	3	2	1	0
NACK	STOP	START	HEAD 10R	ADD10	RD_W RN	SADD[9:0]									
rs	rs	rs	rw	rw	rw	rw									

Bits 31:27 Reserved, must be kept at reset value.

Bit 26 **PECBYTE**: Packet error checking byte

This bit is set by software, and cleared by hardware when the PEC is transferred, or when a STOP condition or an Address matched is received, also when PE=0.

0: No PEC transfer.

1: PEC transmission/reception is requested

Note: Writing '0' to this bit has no effect.

This bit has no effect when RELOAD is set.

This bit has no effect is slave mode when SBC=0.

If the SMBus feature is not supported, this bit is reserved and forced by hardware to '0'. Please refer to Section 34.3: I2C implementation.

Bit 25 **AUTOEND**: Automatic end mode (master mode)

This bit is set and cleared by software.

0: software end mode: TC flag is set when NBYTES data are transferred, stretching SCL low.

1: Automatic end mode: a STOP condition is automatically sent when NBYTES data are transferred.

Note: This bit has no effect in slave mode or when the RELOAD bit is set.

Bit 24 **RELOAD**: NBYTES reload mode

This bit is set and cleared by software.

0: The transfer is completed after the NBYTES data transfer (STOP or RESTART will follow).

1: The transfer is not completed after the NBYTES data transfer (NBYTES will be reloaded). TCR flag is set when NBYTES data are transferred, stretching SCL low.

Bits 23:16 **NBYTES[7:0]**: Number of bytes

The number of bytes to be transmitted/received is programmed there. This field is don't care in slave mode with SBC=0.

Note: Changing these bits when the START bit is set is not allowed.

Bit 15 **NACK**: NACK generation (slave mode)

The bit is set by software, cleared by hardware when the NACK is sent, or when a STOP condition or an Address matched is received, or when PE=0.

0: an ACK is sent after current received byte.

1: a NACK is sent after current received byte.

Note: Writing '0' to this bit has no effect.

This bit is used in slave mode only: in master receiver mode, NACK is automatically generated after last byte preceding STOP or RESTART condition, whatever the NACK bit value.

When an overrun occurs in slave receiver NOSTRETCH mode, a NACK is automatically generated whatever the NACK bit value.

When hardware PEC checking is enabled (PECBYTE=1), the PEC acknowledge value does not depend on the NACK value.

Bit 14 **STOP**: Stop generation (master mode)

The bit is set by software, cleared by hardware when a Stop condition is detected, or when PE = 0.

In Master Mode:

0: No Stop generation.

1: Stop generation after current byte transfer.

Note: Writing '0' to this bit has no effect.

Bit 13 **START**: Start generation

This bit is set by software, and cleared by hardware after the Start followed by the address sequence is sent, by an arbitration loss, by a timeout error detection, or when PE = 0. It can also be cleared by software by writing '1' to the ADDRCF bit in the I2C_ICR register.

0: No Start generation.

1: Restart/Start generation:

– If the I2C is already in master mode with AUTOEND = 0, setting this bit generates a Repeated Start condition when RELOAD=0, after the end of the NBYTES transfer.

– Otherwise setting this bit will generate a START condition once the bus is free.

Note: Writing '0' to this bit has no effect.

The START bit can be set even if the bus is BUSY or I2C is in slave mode.

This bit has no effect when RELOAD is set. In 10-bit addressing mode, if a NACK is received on the first part of the address, the START bit is not cleared by hardware and the master will resend the address sequence, unless the START bit is cleared by software

Bit 12 **HEAD10R**: 10-bit address header only read direction (master receiver mode)

0: The master sends the complete 10 bit slave address read sequence: Start + 2 bytes 10bit address in write direction + Restart + 1st 7 bits of the 10 bit address in read direction.

1: The master only sends the 1st 7 bits of the 10 bit address, followed by Read direction.

Note: Changing this bit when the START bit is set is not allowed.

Bit 11 **ADD10**: 10-bit addressing mode (master mode)

0: The master operates in 7-bit addressing mode,

1: The master operates in 10-bit addressing mode

Note: Changing this bit when the START bit is set is not allowed.

Bit 10 **RD_WRN**: Transfer direction (master mode)

0: Master requests a write transfer.

1: Master requests a read transfer.

Note: Changing this bit when the START bit is set is not allowed.

Bits 9:8 **SADD[9:8]**: Slave address bit 9:8 (master mode)

In 7-bit addressing mode (ADD10 = 0):

These bits are don't care

In 10-bit addressing mode (ADD10 = 1):

These bits should be written with bits 9:8 of the slave address to be sent

Note: Changing these bits when the START bit is set is not allowed.

Bits 7:1 **SADD[7:1]**: Slave address bit 7:1 (master mode)

In 7-bit addressing mode (ADD10 = 0):

These bits should be written with the 7-bit slave address to be sent

In 10-bit addressing mode (ADD10 = 1):

These bits should be written with bits 7:1 of the slave address to be sent.

Note: Changing these bits when the START bit is set is not allowed.

Bit 0 **SADD0**: Slave address bit 0 (master mode)

In 7-bit addressing mode (ADD10 = 0):

This bit is don't care

In 10-bit addressing mode (ADD10 = 1):

This bit should be written with bit 0 of the slave address to be sent

Note: Changing these bits when the START bit is set is not allowed.

34.7.3 Own address 1 register (I2C_OAR1)

Address offset: 0x08

Reset value: 0x0000 0000

Access: No wait states, except if a write access occurs while a write access to this register is ongoing. In this case, wait states are inserted in the second write access until the previous one is completed. The latency of the second write access can be up to 2 x PCLK1 + 6 x I2CCLK.

31	30	29	28	27	26	25	24	23	22	21	20	19	18	17	16
Res.	Res.	Res.	Res.	Res.	Res.	Res.	Res.	Res.	Res.	Res.	Res.	Res.	Res.	Res.	Res.

15	14	13	12	11	10	9	8	7	6	5	4	3	2	1	0
OA1EN	Res.	Res.	Res.	Res.	OA1 MODE	OA1[9:8]		OA1[7:1]							OA1[0]
rw					rw	rw		rw							rw

Bits 31:16 Reserved, must be kept at reset value.

Bit 15 **OA1EN**: Own Address 1 enable
0: Own address 1 disabled. The received slave address OA1 is NACKed.
1: Own address 1 enabled. The received slave address OA1 is ACKed.

Bits 14:11 Reserved, must be kept at reset value.

Bit 10 **OA1MODE** Own Address 1 10-bit mode
0: Own address 1 is a 7-bit address.
1: Own address 1 is a 10-bit address.
Note: This bit can be written only when OA1EN=0.

Bits 9:8 **OA1[9:8]**: Interface address
7-bit addressing mode: don't care
10-bit addressing mode: bits 9:8 of address
Note: These bits can be written only when OA1EN=0.

Bits 7:1 **OA1[7:1]**: Interface address
Bits 7:1 of address
Note: These bits can be written only when OA1EN=0.

Bit 0 **OA1[0]**: Interface address
7-bit addressing mode: don't care
10-bit addressing mode: bit 0 of address
Note: This bit can be written only when OA1EN=0.

34.7.4 Own address 2 register (I2C_OAR2)

Address offset: 0x0C

Reset value: 0x0000 0000

Access: No wait states, except if a write access occurs while a write access to this register is ongoing. In this case, wait states are inserted in the second write access until the previous one is completed. The latency of the second write access can be up to 2 x PCLK1 + 6 x I2CCLK.

31	30	29	28	27	26	25	24	23	22	21	20	19	18	17	16
Res.	Res.	Res.	Res.	Res.	Res.	Res.	Res.	Res.	Res.	Res.	Res.	Res.	Res.	Res.	Res.

15	14	13	12	11	10	9	8	7	6	5	4	3	2	1	0
OA2EN	Res.	Res.	Res.	Res.	OA2MSK[2:0]			OA2[7:1]							Res.
rw					rw			rw							

Bits 31:16 Reserved, must be kept at reset value.

Bit 15 **OA2EN**: Own Address 2 enable

0: Own address 2 disabled. The received slave address OA2 is NACKed.
1: Own address 2 enabled. The received slave address OA2 is ACKed.

Bits 14:11 Reserved, must be kept at reset value.

Bits 10:8 **OA2MSK[2:0]**: Own Address 2 masks

000: No mask
001: OA2[1] is masked and don't care. Only OA2[7:2] are compared.
010: OA2[2:1] are masked and don't care. Only OA2[7:3] are compared.
011: OA2[3:1] are masked and don't care. Only OA2[7:4] are compared.
100: OA2[4:1] are masked and don't care. Only OA2[7:5] are compared.
101: OA2[5:1] are masked and don't care. Only OA2[7:6] are compared.
110: OA2[6:1] are masked and don't care. Only OA2[7] is compared.
111: OA2[7:1] are masked and don't care. No comparison is done, and all (except reserved) 7-bit received addresses are acknowledged.

Note: These bits can be written only when OA2EN=0.

As soon as OA2MSK is not equal to 0, the reserved I2C addresses (0b0000xxx and 0b1111xxx) are not acknowledged even if the comparison matches.

Bits 7:1 **OA2[7:1]**: Interface address

bits 7:1 of address

Note: These bits can be written only when OA2EN=0.

Bit 0 Reserved, must be kept at reset value.

34.7.5 Timing register (I2C_TIMINGR)

Address offset: 0x10

Reset value: 0x0000 0000

Access: No wait states

31	30	29	28	27	26	25	24	23	22	21	20	19	18	17	16
PRESC[3:0]				Res.	Res.	Res.	Res.	SCLDEL[3:0]				SDADEL[3:0]			
rw								rw				rw			

15	14	13	12	11	10	9	8	7	6	5	4	3	2	1	0
SCLH[7:0]								SCLL[7:0]							
rw								rw							

Bits 31:28 **PRESC[3:0]**: Timing prescaler

This field is used to prescale I2CCLK in order to generate the clock period t_{PRESC} used for data setup and hold counters (refer to *I2C timings on page 969*) and for SCL high and low level counters (refer to *I2C master initialization on page 984*).

t_{PRESC} = (PRESC+1) x t_{I2CCLK}

Bits 27:24 Reserved, must be kept at reset value.

Bits 23:20 **SCLDEL[3:0]**: Data setup time

This field is used to generate a delay t_{SCLDEL} between SDA edge and SCL rising edge. In master mode and in slave mode with NOSTRETCH = 0, the SCL line is stretched low during t_{SCLDEL}.

t_{SCLDEL} = (SCLDEL+1) x t_{PRESC}

Note: t_{SCLDEL} is used to generate $t_{SU:DAT}$ timing.

Bits 19:16 **SDADEL[3:0]**: Data hold time

This field is used to generate the delay t_{SDADEL} between SCL falling edge and SDA edge. In master mode and in slave mode with NOSTRETCH = 0, the SCL line is stretched low during t_{SDADEL}.

t_{SDADEL}= SDADEL x t_{PRESC}

Note: SDADEL is used to generate $t_{HD:DAT}$ timing.

Bits 15:8 **SCLH[7:0]**: SCL high period (master mode)

This field is used to generate the SCL high period in master mode.

t_{SCLH} = (SCLH+1) x t_{PRESC}

Note: SCLH is also used to generate $t_{SU:STO}$ and $t_{HD:STA}$ timing.

Bits 7:0 **SCLL[7:0]**: SCL low period (master mode)

This field is used to generate the SCL low period in master mode.

t_{SCLL} = (SCLL+1) x t_{PRESC}

Note: SCLL is also used to generate t_{BUF} and $t_{SU:STA}$ timings.

Note: This register must be configured when the I2C is disabled (PE = 0).

Note: The STM32CubeMX tool calculates and provides the I2C_TIMINGR content in the I2C Configuration window.

34.7.6 Timeout register (I2C_TIMEOUTR)

Address offset: 0x14

Reset value: 0x0000 0000

Access: No wait states, except if a write access occurs while a write access to this register is ongoing. In this case, wait states are inserted in the second write access until the previous one is completed. The latency of the second write access can be up to 2 x PCLK1 + 6 x I2CCLK.

31	30	29	28	27	26	25	24	23	22	21	20	19	18	17	16
TEXTEN	Res.	Res.	Res.	TIMEOUTB [11:0]											
rw				rw											
15	14	13	12	11	10	9	8	7	6	5	4	3	2	1	0
TIMOUTEN	Res.	Res.	TIDLE	TIMEOUTA [11:0]											
rw			rw	rw											

Bit 31 **TEXTEN**: Extended clock timeout enable

0: Extended clock timeout detection is disabled

1: Extended clock timeout detection is enabled. When a cumulative SCL stretch for more than $t_{LOW:EXT}$ is done by the I2C interface, a timeout error is detected (TIMEOUT=1).

Bits 30:28 Reserved, must be kept at reset value.

Bits 27:16 **TIMEOUTB[11:0]**: Bus timeout B

This field is used to configure the cumulative clock extension timeout:

In master mode, the master cumulative clock low extend time ($t_{LOW:MEXT}$) is detected

In slave mode, the slave cumulative clock low extend time ($t_{LOW:SEXT}$) is detected

$t_{LOW:EXT}$= (TIMEOUTB+1) x 2048 x t_{I2CCLK}

Note: These bits can be written only when TEXTEN=0.

Bit 15 **TIMOUTEN**: Clock timeout enable

0: SCL timeout detection is disabled

1: SCL timeout detection is enabled: when SCL is low for more than $t_{TIMEOUT}$ (TIDLE=0) or high for more than t_{IDLE} (TIDLE=1), a timeout error is detected (TIMEOUT=1).

Bits 14:13 Reserved, must be kept at reset value.

Bit 12 **TIDLE**: Idle clock timeout detection

0: TIMEOUTA is used to detect SCL low timeout

1: TIMEOUTA is used to detect both SCL and SDA high timeout (bus idle condition)

Note: This bit can be written only when TIMOUTEN=0.

Bits 11:0 **TIMEOUTA[11:0]**: Bus Timeout A

This field is used to configure:

– The SCL low timeout condition $t_{TIMEOUT}$ when TIDLE=0

$t_{TIMEOUT}$= (TIMEOUTA+1) x 2048 x t_{I2CCLK}

– The bus idle condition (both SCL and SDA high) when TIDLE=1

t_{IDLE}= (TIMEOUTA+1) x 4 x t_{I2CCLK}

Note: These bits can be written only when TIMOUTEN=0.

Note: If the SMBus feature is not supported, this register is reserved and forced by hardware to "0x00000000". Please refer to Section 34.3: I2C implementation.

34.7.7 Interrupt and status register (I2C_ISR)

Address offset: 0x18

Reset value: 0x0000 0001

Access: No wait states

31	30	29	28	27	26	25	24	23	22	21	20	19	18	17	16
Res.	Res.	Res.	Res.	Res.	Res.	Res.	Res.	ADDCODE[6:0]							DIR
								r							r

15	14	13	12	11	10	9	8	7	6	5	4	3	2	1	0
BUSY	Res.	ALERT	TIME OUT	PEC ERR	OVR	ARLO	BERR	TCR	TC	STOPF	NACKF	ADDR	RXNE	TXIS	TXE
r		r	r	r	r	r	r	r	r	r	r	r	r	rs	rs

Bits 31:24 Reserved, must be kept at reset value.

Bits 23:17 **ADDCODE[6:0]**: Address match code (Slave mode)

These bits are updated with the received address when an address match event occurs (ADDR = 1).

In the case of a 10-bit address, ADDCODE provides the 10-bit header followed by the 2 MSBs of the address.

Bit 16 **DIR**: Transfer direction (Slave mode)

This flag is updated when an address match event occurs (ADDR=1).

0: Write transfer, slave enters receiver mode.

1: Read transfer, slave enters transmitter mode.

Bit 15 **BUSY**: Bus busy

This flag indicates that a communication is in progress on the bus. It is set by hardware when a START condition is detected. It is cleared by hardware when a Stop condition is detected, or when PE=0.

Bit 14 Reserved, must be kept at reset value.

Bit 13 **ALERT**: SMBus alert

This flag is set by hardware when SMBHEN=1 (SMBus host configuration), ALERTEN=1 and a SMBALERT event (falling edge) is detected on SMBA pin. It is cleared by software by setting the ALERTCF bit.

Note: This bit is cleared by hardware when PE=0.

If the SMBus feature is not supported, this bit is reserved and forced by hardware to '0'. Please refer to Section 34.3: I2C implementation.

Bit 12 **TIMEOUT**: Timeout or t_{LOW} detection flag

This flag is set by hardware when a timeout or extended clock timeout occurred. It is cleared by software by setting the TIMEOUTCF bit.

Note: This bit is cleared by hardware when PE=0.

If the SMBus feature is not supported, this bit is reserved and forced by hardware to '0'. Please refer to Section 34.3: I2C implementation.

Bit 11 **PECERR**: PEC Error in reception

This flag is set by hardware when the received PEC does not match with the PEC register content. A NACK is automatically sent after the wrong PEC reception. It is cleared by software by setting the PECCF bit.

Note: This bit is cleared by hardware when PE=0.

If the SMBus feature is not supported, this bit is reserved and forced by hardware to '0'. Please refer to Section 34.3: I2C implementation.

Bit 10 **OVR**: Overrun/Underrun (slave mode)

This flag is set by hardware in slave mode with NOSTRETCH=1, when an overrun/underrun error occurs. It is cleared by software by setting the OVRCF bit.

Note: This bit is cleared by hardware when PE=0.

Bit 9 **ARLO**: Arbitration lost

This flag is set by hardware in case of arbitration loss. It is cleared by software by setting the ARLOCF bit.

Note: This bit is cleared by hardware when PE=0.

Bit 8 **BERR**: Bus error

This flag is set by hardware when a misplaced Start or Stop condition is detected whereas the peripheral is involved in the transfer. The flag is not set during the address phase in slave mode. It is cleared by software by setting *BERRCF bit.*

Note: This bit is cleared by hardware when PE=0.

Bit 7 **TCR**: Transfer Complete Reload

This flag is set by hardware when RELOAD=1 and NBYTES data have been transferred. It is cleared by software when NBYTES is written to a non-zero value.

Note: This bit is cleared by hardware when PE=0.

This flag is only for master mode, or for slave mode when the SBC bit is set.

Bit 6 **TC**: Transfer Complete (master mode)

This flag is set by hardware when RELOAD=0, AUTOEND=0 and NBYTES data have been transferred. It is cleared by software when START bit or STOP bit is set.

Note: This bit is cleared by hardware when PE=0.

Bit 5 **STOPF**: Stop detection flag

This flag is set by hardware when a Stop condition is detected on the bus and the peripheral is involved in this transfer:

– either as a master, provided that the STOP condition is generated by the peripheral.

– or as a slave, provided that the peripheral has been addressed previously during this transfer.

It is cleared by software by setting the STOPCF bit.

Note: This bit is cleared by hardware when PE=0.

Bit 4 **NACKF**: Not Acknowledge received flag

This flag is set by hardware when a NACK is received after a byte transmission. It is cleared by software by setting the NACKCF bit.

Note: This bit is cleared by hardware when PE=0.

Bit 3 **ADDR**: Address matched (slave mode)

This bit is set by hardware as soon as the received slave address matched with one of the enabled slave addresses. It is cleared by software by setting *ADDRCF bit.*

Note: This bit is cleared by hardware when PE=0.

Bit 2 **RXNE**: Receive data register not empty (receivers)

This bit is set by hardware when the received data is copied into the I2C_RXDR register, and is ready to be read. It is cleared when I2C_RXDR is read.

Note: This bit is cleared by hardware when PE=0.

Bit 1 **TXIS**: Transmit interrupt status (transmitters)

This bit is set by hardware when the I2C_TXDR register is empty and the data to be transmitted must be written in the I2C_TXDR register. It is cleared when the next data to be sent is written in the I2C_TXDR register.

This bit can be written to ‘1’ by software when NOSTRETCH=1 only, in order to generate a TXIS event (interrupt if TXIE=1 or DMA request if TXDMAEN=1).

Note: This bit is cleared by hardware when PE=0.

Bit 0 **TXE**: Transmit data register empty (transmitters)

This bit is set by hardware when the I2C_TXDR register is empty. It is cleared when the next data to be sent is written in the I2C_TXDR register.

This bit can be written to ‘1’ by software in order to flush the transmit data register I2C_TXDR.

Note: This bit is set by hardware when PE=0.

34.7.8 Interrupt clear register (I2C_ICR)

Address offset: 0x1C

Reset value: 0x0000 0000

Access: No wait states

31	30	29	28	27	26	25	24	23	22	21	20	19	18	17	16
Res.	Res.	Res.	Res.	Res.	Res.	Res.	Res.	Res.	Res.	Res.	Res.	Res.	Res.	Res.	Res.

15	14	13	12	11	10	9	8	7	6	5	4	3	2	1	0
Res.	Res.	ALERT CF	TIM OUTCF	PECCF	OVRCF	ARLO CF	BERR CF	Res.	Res.	STOP CF	NACK CF	ADDR CF	Res.	Res.	Res.
		w	w	w	w	w	w			w	w	w			

Bits 31:14 Reserved, must be kept at reset value.

Bit 13 **ALERTCF**: Alert flag clear

Writing 1 to this bit clears the ALERT flag in the I2C_ISR register.

Note: If the SMBus feature is not supported, this bit is reserved and forced by hardware to ‘0’. Please refer to Section 34.3: I2C implementation.

Bit 12 **TIMOUTCF**: Timeout detection flag clear

Writing 1 to this bit clears the TIMEOUT flag in the I2C_ISR register.

Note: If the SMBus feature is not supported, this bit is reserved and forced by hardware to ‘0’. Please refer to Section 34.3: I2C implementation.

Bit 11 **PECCF**: PEC Error flag clear

Writing 1 to this bit clears the PECERR flag in the I2C_ISR register.

Note: If the SMBus feature is not supported, this bit is reserved and forced by hardware to ‘0’. Please refer to Section 34.3: I2C implementation.

Bit 10 **OVRCF**: Overrun/Underrun flag clear

Writing 1 to this bit clears the OVR flag in the I2C_ISR register.

Bit 9 **ARLOCF**: Arbitration Lost flag clear
Writing 1 to this bit clears the ARLO flag in the I2C_ISR register.

Bit 8 **BERRCF**: Bus error flag clear
Writing 1 to this bit clears the BERRF flag in the I2C_ISR register.

Bits 7:6 Reserved, must be kept at reset value.

Bit 5 **STOPCF**: Stop detection flag clear
Writing 1 to this bit clears the STOPF flag in the I2C_ISR register.

Bit 4 **NACKCF**: Not Acknowledge flag clear
Writing 1 to this bit clears the ACKF flag in I2C_ISR register.

Bit 3 **ADDRCF**: Address matched flag clear
Writing 1 to this bit clears the ADDR flag in the I2C_ISR register. Writing 1 to this bit also clears the START bit in the I2C_CR2 register.

Bits 2:0 Reserved, must be kept at reset value.

34.7.9 PEC register (I2C_PECR)

Address offset: 0x20

Reset value: 0x0000 0000

Access: No wait states

31	30	29	28	27	26	25	24	23	22	21	20	19	18	17	16
Res.	Res.	Res.	Res.	Res.	Res.	Res.	Res.	Res.	Res.	Res.	Res.	Res.	Res.	Res.	Res.

15	14	13	12	11	10	9	8	7	6	5	4	3	2	1	0
Res.	Res.	Res.	Res.	Res.	Res.	Res.	Res.	PEC[7:0]							
								r							

Bits 31:8 Reserved, must be kept at reset value.

Bits 7:0 **PEC[7:0]** Packet error checking register
This field contains the internal PEC when PECEN=1.
The PEC is cleared by hardware when PE=0.

Note: If the SMBus feature is not supported, this register is reserved and forced by hardware to "0x00000000". Please refer to Section 34.3: I2C implementation.

34.7.10 Receive data register (I2C_RXDR)

Address offset: 0x24

Reset value: 0x0000 0000

Access: No wait states

31	30	29	28	27	26	25	24	23	22	21	20	19	18	17	16
Res.	Res.	Res.	Res.	Res.	Res.	Res.	Res.	Res.	Res.	Res.	Res.	Res.	Res.	Res.	Res.

15	14	13	12	11	10	9	8	7	6	5	4	3	2	1	0
Res.	Res.	Res.	Res.	Res.	Res.	Res.	Res.	RXDATA[7:0]							
								r							

Bits 31:8 Reserved, must be kept at reset value.

Bits 7:0 **RXDATA[7:0]** 8-bit receive data
Data byte received from the I^2C bus.

34.7.11 Transmit data register (I2C_TXDR)

Address offset: 0x28

Reset value: 0x0000 0000

Access: No wait states

31	30	29	28	27	26	25	24	23	22	21	20	19	18	17	16
Res.	Res.	Res.	Res.	Res.	Res.	Res.	Res.	Res.	Res.	Res.	Res.	Res.	Res.	Res.	Res.

15	14	13	12	11	10	9	8	7	6	5	4	3	2	1	0
Res.	Res.	Res.	Res.	Res.	Res.	Res.	Res.	TXDATA[7:0]							
								rw							

Bits 31:8 Reserved, must be kept at reset value.

Bits 7:0 **TXDATA[7:0]** 8-bit transmit data
Data byte to be transmitted to the I^2C bus.
Note: These bits can be written only when TXE=1.

34.7.12 I2C register map

The table below provides the I2C register map and reset values.

Table 153. I2C register map and reset values

Offset	Register	31	30	29	28	27	26	25	24	23	22	21	20	19	18	17	16	15	14	13	12	11	10	9	8	7	6	5	4	3	2	1	0
0x0	I2C_CR1	Res.	Res.	Res.	Res.	Res.	Res.	Res.	Res.	PECEN	ALERTEN	SMBDEN	SMBHEN	GCEN	WUPEN	NOSTRETCH	SBC	RXDMAEN	TXDMAEN	Res.	ANFOFF	DNF[3:0]				ERRIE	TCIE	STOPIE	NACKIE	ADDRIE	RXIE	TXIE	PE
	Reset value									0	0	0	0	0	0	0	0	0	0		0	0	0	0	0	0	0	0	0	0	0	0	0
0x4	I2C_CR2	Res.	Res.	Res.	Res.	Res.	PECBYTE	AUTOEND	RELOAD	NBYTES[7:0]								NACK	STOP	START	HEAD10R	ADD10	RD_WRN	SADD[9:0]									
	Reset value						0	0	0	0	0	0	0	0	0	0	0	0	0	0	0	0	0	0	0	0	0	0	0	0	0	0	0
0x8	I2C_OAR1	Res.	Res.	Res.	Res.	Res.	Res.	Res.	Res.	Res.	Res.	Res.	Res.	Res.	Res.	Res.	Res.	OA1EN	Res.	Res.	Res.	Res.	OA1MODE	OA1[9:0]									
	Reset value																	0					0	0	0	0	0	0	0	0	0	0	0
0xC	I2C_OAR2	Res.	Res.	Res.	Res.	Res.	Res.	Res.	Res.	Res.	Res.	Res.	Res.	Res.	Res.	Res.	Res.	OA2EN	Res.	Res.	Res.	Res.	OA2MSK [2:0]	OA2[7:1]									Res.
	Reset value																	0					0	0	0	0	0	0	0	0	0	0	
0x10	I2C_TIMINGR	PRESC[3:0]				Res.	Res.	Res.	Res.	SCLDEL[3:0]				SDADEL[3:0]				SCLH[7:0]								SCLL[7:0]							
	Reset value	0	0	0	0					0	0	0	0	0	0	0	0	0	0	0	0	0	0	0	0	0	0	0	0	0	0	0	0
0x14	I2C_TIMEOUTR	TEXTEN	Res.	Res.	Res.	TIMEOUTB[11:0]												TIMOUTEN	Res.		TIDLE	TIMEOUTA[11:0]											
	Reset value	0				0	0	0	0	0	0	0	0	0	0	0	0	0			0	0	0	0	0	0	0	0	0	0	0	0	0
0x18	I2C_ISR	Res.	Res.	Res.	Res.	Res.	Res.	Res.	Res.	ADDCODE[6:0]							DIR	BUSY	Res.	ALERT	TIMEOUT	PECERR	OVR	ARLO	BERR	TCR	TC	STOPF	NACKF	ADDR	RXNE	TXIS	TXE
	Reset value									0	0	0	0	0	0	0	0	0		0	0	0	0	0	0	0	0	0	0	0	0	0	1
0x1C	I2C_ICR	Res.	Res.	Res.	Res.	Res.	Res.	Res.	Res.	Res.	Res.	Res.	Res.	Res.	Res.	Res.	Res.	Res.	Res.	ALERTCF	TIMOUTCF	PECCF	OVRCF	ARLOCF	BERRCF	Res.	Res.	STOPCF	NACKCF	ADDRCF	Res.	Res.	Res.
	Reset value																			0	0	0	0	0	0			0	0	0			
0x20	I2C_PECR	Res.	Res.	Res.	Res.	Res.	Res.	Res.	Res.	Res.	Res.	Res.	Res.	Res.	Res.	Res.	Res.	Res.	Res.	Res.	Res.	Res.	Res.	Res.	Res.	PEC[7:0]							
	Reset value																									0	0	0	0	0	0	0	0
0x24	I2C_RXDR	Res.	Res.	Res.	Res.	Res.	Res.	Res.	Res.	Res.	Res.	Res.	Res.	Res.	Res.	Res.	Res.	Res.	Res.	Res.	Res.	Res.	Res.	Res.	Res.	RXDATA[7:0]							
	Reset value																									0	0	0	0	0	0	0	0

Table 153. I2C register map and reset values (continued)

Offset	Register	31	30	29	28	27	26	25	24	23	22	21	20	19	18	17	16	15	14	13	12	11	10	9	8	7	6	5	4	3	2	1	0
0x28	**I2C_TXDR**	Res.	Res.	Res.	Res.	Res.	Res.	Res.	Res.	Res.	Res.	Res.	Res.	Res.	Res.	Res.	Res.	Res.	Res.	Res.	Res.	Res.	Res.	Res.	Res.	TXDATA[7:0]							
	Reset value																									0	0	0	0	0	0	0	0

Refer to *Section 2.2.2 on page 62* for the register boundary addresses.

35 Universal synchronous asynchronous receiver transmitter (USART)

35.1 Introduction

The universal synchronous asynchronous receiver transmitter (USART) offers a flexible means of Full-duplex data exchange with external equipment requiring an industry standard NRZ asynchronous serial data format. The USART offers a very wide range of baud rates using a programmable baud rate generator.

It supports synchronous one-way communication and Half-duplex Single-wire communication, as well as multiprocessor communications. It also supports the LIN (Local Interconnect Network), Smartcard protocol and IrDA (Infrared Data Association) SIR ENDEC specifications and Modem operations (CTS/RTS).

High speed data communication is possible by using the DMA (direct memory access) for multibuffer configuration.

35.2 USART main features

- Full-duplex asynchronous communications
- NRZ standard format (mark/space)
- Configurable oversampling method by 16 or 8 to give flexibility between speed and clock tolerance
- A common programmable transmit and receive baud rate of up to 10 Mbit/s when the clock frequency is 80 MHz and oversampling is by 8
- Dual clock domain allowing:
  - USART functionality and wakeup from Stop mode
  - Convenient baud rate programming independent from the PCLK reprogramming
- Auto baud rate detection
- Programmable data word length (7, 8 or 9 bits)
- Programmable data order with MSB-first or LSB-first shifting
- Configurable stop bits (1 or 2 stop bits)
- Synchronous mode and clock output for synchronous communications
- Single-wire Half-duplex communications
- Continuous communications using DMA
- Received/transmitted bytes are buffered in reserved SRAM using centralized DMA
- Separate enable bits for transmitter and receiver
- Separate signal polarity control for transmission and reception
- Swappable Tx/Rx pin configuration
- Hardware flow control for modem and RS-485 transceiver

- Communication control/error detection flags
- Parity control:
  - Transmits parity bit
  - Checks parity of received data byte
- Fourteen interrupt sources with flags
- Multiprocessor communications
  The USART enters mute mode if the address does not match.
- Wakeup from mute mode (by idle line detection or address mark detection)

35.3 USART extended features

- LIN master synchronous break send capability and LIN slave break detection capability
  - 13-bit break generation and 10/11-bit break detection when USART is hardware configured for LIN
- IrDA SIR encoder decoder supporting 3/16 bit duration for normal mode
- Smartcard mode
  - Supports the T=0 and T=1 asynchronous protocols for smartcards as defined in the ISO/IEC 7816-3 standard
  - 0.5 and 1.5 stop bits for smartcard operation
- Support for ModBus communication
  - Timeout feature
  - CR/LF character recognition

35.4 USART implementation

The STM32L4x3 devices embed 3 USARTs and 1 LPUART. The *Table 154* describes the features supported by each peripheral.

Table 154. STM32L431/433/443 USART/LPUART features

USART modes/features(1)	USART1	USART2	USART3	LPUART1
Hardware flow control for modem	X	X	X	X
Continuous communication using DMA	X	X	X	X
Multiprocessor communication	X	X	X	X
Synchronous mode	X	X	X	-
Smartcard mode	X	X	X	-
Single-wire Half-duplex communication	X	X	X	X
IrDA SIR ENDEC block	X	X	X	-
LIN mode	X	X	X	-
Dual clock domain and wakeup from Stop mode	X	X	X	X
Receiver timeout interrupt	X	X	X	-
Modbus communication	X	X	X	-
Auto baud rate detection	X (4 modes)			-
Driver Enable	X	X	X	X
LPUART/USART data length	7, 8 and 9 bits			

1. X = supported.

35.5 USART functional description

Any USART bidirectional communication requires a minimum of two pins: Receive data In (RX) and Transmit data Out (TX):

- **RX**: Receive data Input.

  This is the serial data input. Oversampling techniques are used for data recovery by discriminating between valid incoming data and noise.

- **TX:** Transmit data Output.

  When the transmitter is disabled, the output pin returns to its I/O port configuration. When the transmitter is enabled and nothing is to be transmitted, the TX pin is at high level. In Single-wire and Smartcard modes, this I/O is used to transmit and receive the data.

Serial data are transmitted and received through these pins in normal USART mode. The frames are comprised of:

- An Idle Line prior to transmission or reception
- A start bit
- A data word (7, 8 or 9 bits) least significant bit first
- 0.5, 1, 1.5, 2 stop bits indicating that the frame is complete
- The USART interface uses a baud rate generator
- A status register (USART_ISR)
- Receive and transmit data registers (USART_RDR, USART_TDR)
- A baud rate register (USART_BRR)
- A guard-time register (USART_GTPR) in case of Smartcard mode.

Refer to *Section 35.8: USART registers on page 1077* for the definitions of each bit.

The following pin is required to interface in synchronous mode and Smartcard mode:

- **CK:** Clock output. This pin outputs the transmitter data clock for synchronous transmission corresponding to SPI master mode (no clock pulses on start bit and stop bit, and a software option to send a clock pulse on the last data bit). In parallel, data can be received synchronously on RX. This can be used to control peripherals that have shift registers. The clock phase and polarity are software programmable. In Smartcard mode, CK output can provide the clock to the smartcard.

The following pins are required in RS232 Hardware flow control mode:

- **CTS:** Clear To Send blocks the data transmission at the end of the current transfer when high
- **RTS:** Request to send indicates that the USART is ready to receive data (when low).

The following pin is required in RS485 Hardware control mode:

- **DE**: Driver Enable activates the transmission mode of the external transceiver.

Note: DE and RTS share the same pin.

Figure 357. USART block diagram

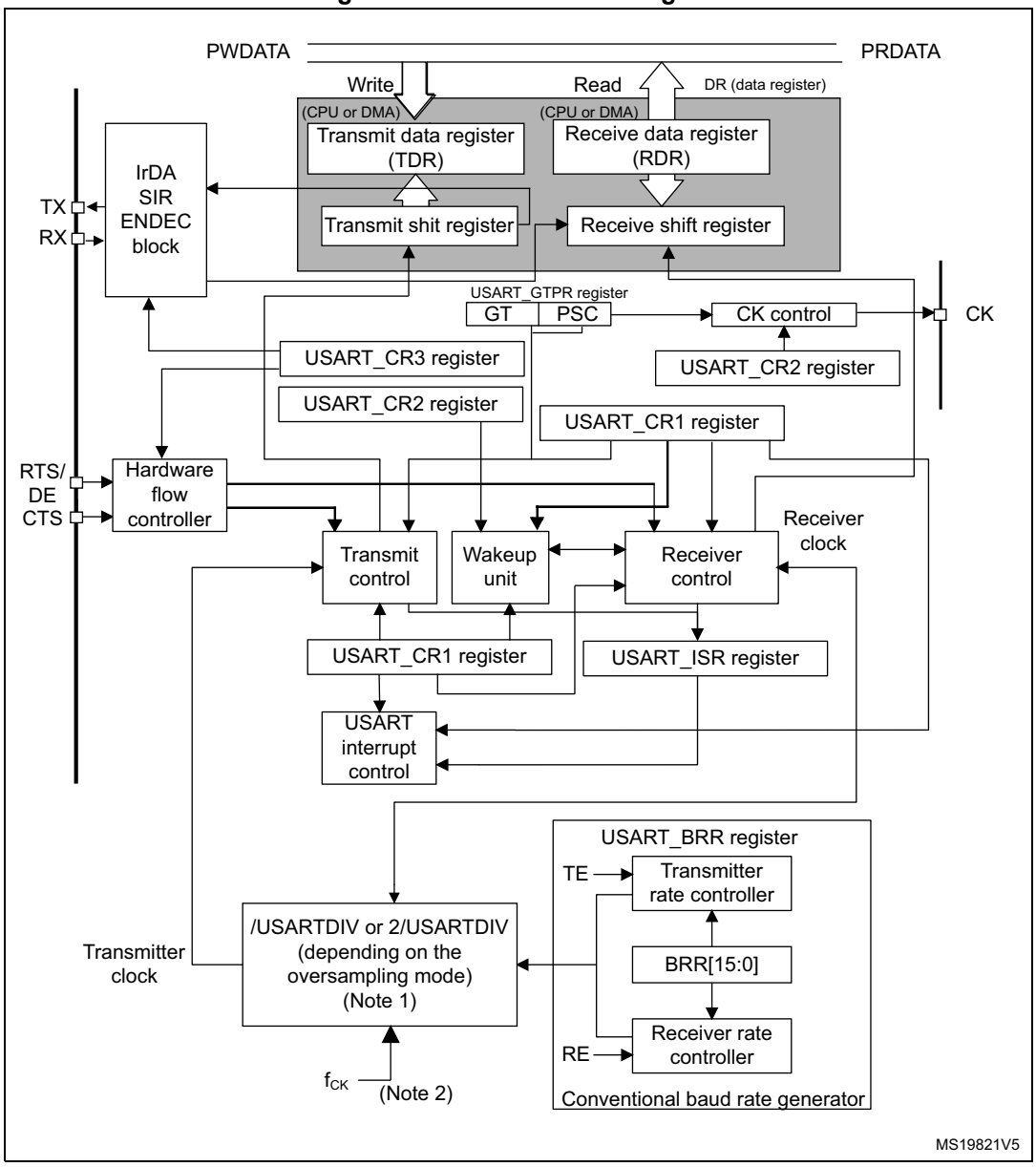

1. For details on coding USARTDIV in the USART_BRR register, please refer to *Section 35.5.4: USART baud rate generation*.
2. f_{CK} can be f_{LSE}, f_{HSI}, f_{PCLK}, f_{SYS}.

35.5.1 USART character description

The word length can be selected as being either 7 or 8 or 9 bits by programming the M[1:0] bits in the USART_CR1 register (see *Figure 358*).

- 7-bit character length: M[1:0] = 10
- 8-bit character length: M[1:0] = 00
- 9-bit character length: M[1:0] = 01

Note: In 7-bit data length mode, the Smartcard mode, LIN master mode and Autobaudrate (0x7F and 0x55 frames detection) are not supported. 7-bit mode is supported only on some USARTs.

By default, the signal (TX or RX) is in low state during the start bit. It is in high state during the stop bit.

These values can be inverted, separately for each signal, through polarity configuration control.

An ***Idle character*** is interpreted as an entire frame of “1”s (the number of “1”s includes the number of stop bits).

A ***Break character*** is interpreted on receiving “0”s for a frame period. At the end of the break frame, the transmitter inserts 2 stop bits.

Transmission and reception are driven by a common baud rate generator, the clock for each is generated when the enable bit is set respectively for the transmitter and receiver.

The details of each block is given below.

Figure 358. Word length programming

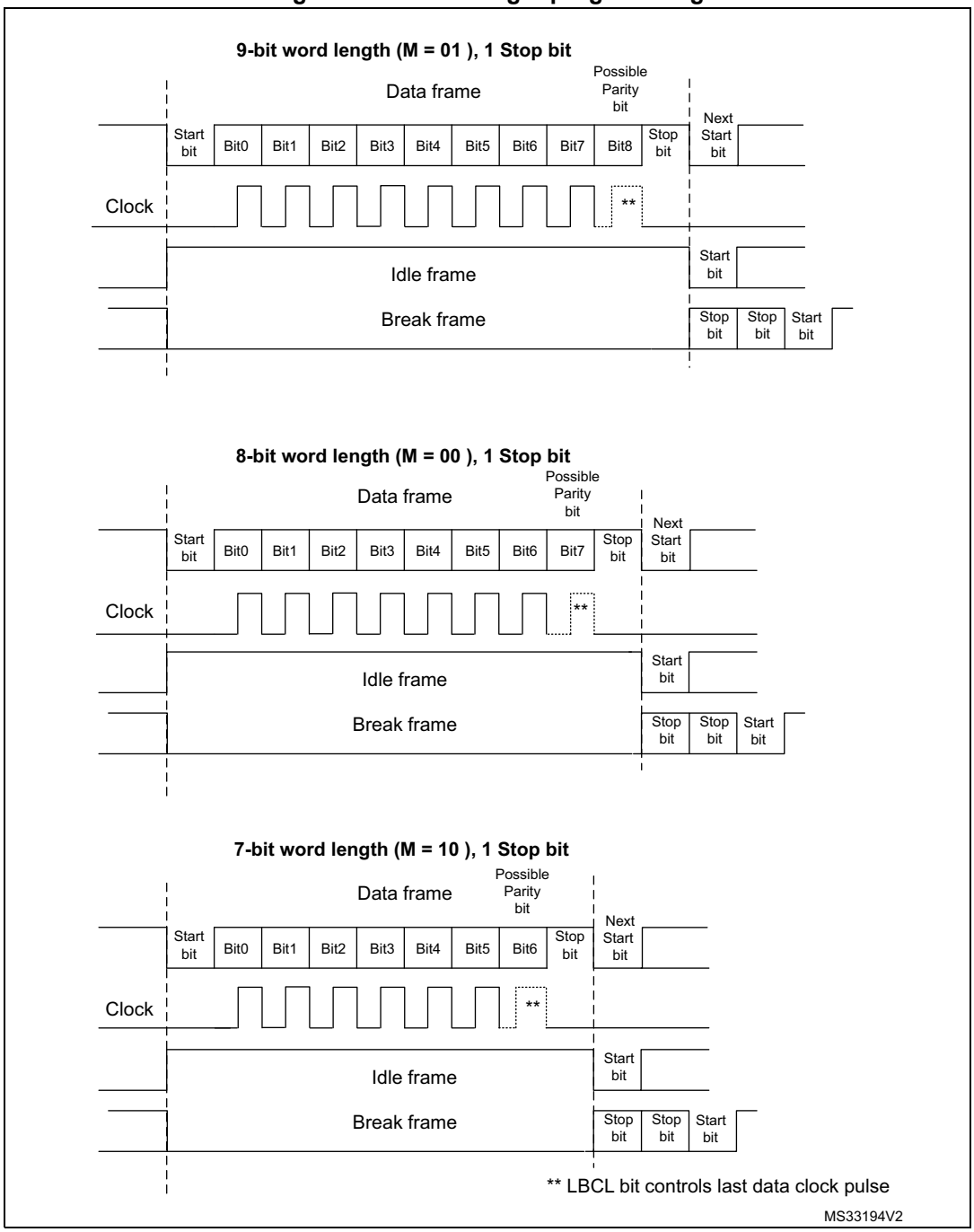

35.5.2 USART transmitter

The transmitter can send data words of either 7, 8 or 9 bits depending on the M bits status. The Transmit Enable bit (TE) must be set in order to activate the transmitter function. The data in the transmit shift register is output on the TX pin and the corresponding clock pulses are output on the CK pin.

Character transmission

During an USART transmission, data shifts out least significant bit first (default configuration) on the TX pin. In this mode, the USART_TDR register consists of a buffer (TDR) between the internal bus and the transmit shift register (see *Figure 357*).

Every character is preceded by a start bit which is a logic level low for one bit period. The character is terminated by a configurable number of stop bits.

The following stop bits are supported by USART: 0.5, 1, 1.5 and 2 stop bits.

Note: The TE bit must be set before writing the data to be transmitted to the USART_TDR.

The TE bit should not be reset during transmission of data. Resetting the TE bit during the transmission will corrupt the data on the TX pin as the baud rate counters will get frozen. The current data being transmitted will be lost.

An idle frame will be sent after the TE bit is enabled.

Configurable stop bits

The number of stop bits to be transmitted with every character can be programmed in Control register 2, bits 13,12.

- ***1 stop bit***: This is the default value of number of stop bits.
- ***2 stop bits***: This will be supported by normal USART, Single-wire and Modem modes.
- ***1.5 stop bits***: To be used in Smartcard mode.
- ***0.5 stop bit***: To be used when receiving data in Smartcard mode.

An idle frame transmission will include the stop bits.

A break transmission will be 10 low bits (when M[1:0] = 00) or 11 low bits (when M[1:0] = 01) or 9 low bits (when M[1:0] = 10) followed by 2 stop bits (see *Figure 359*). It is not possible to transmit long breaks (break of length greater than 9/10/11 low bits).

Figure 359. Configurable stop bits

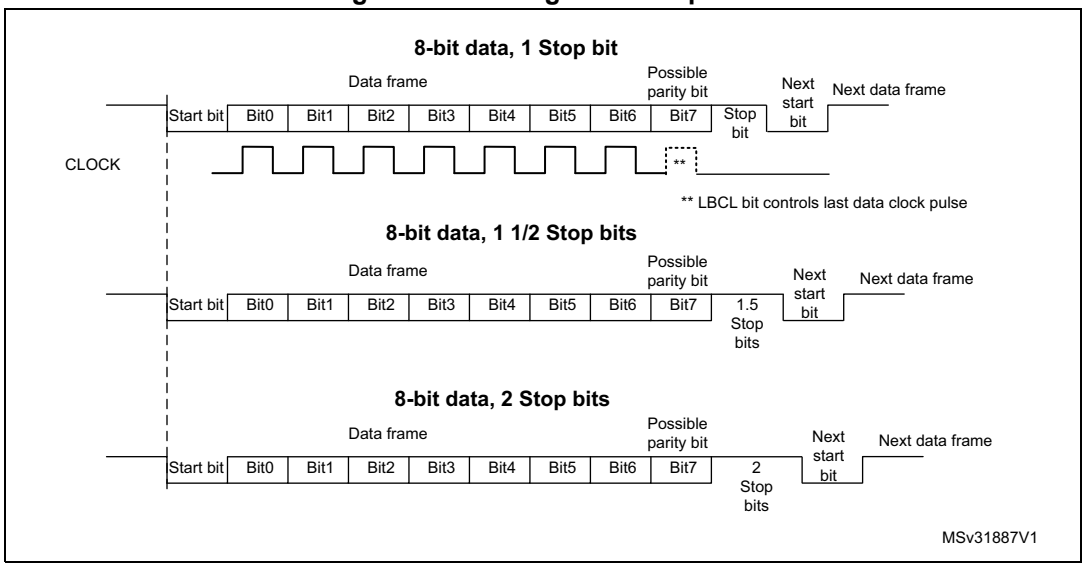

Character transmission procedure

1. Program the M bits in USART_CR1 to define the word length.
2. Select the desired baud rate using the USART_BRR register.
3. Program the number of stop bits in USART_CR2.
4. Enable the USART by writing the UE bit in USART_CR1 register to 1.
5. Select DMA enable (DMAT) in USART_CR3 if multibuffer communication is to take place. Configure the DMA register as explained in multibuffer communication.
6. Set the TE bit in USART_CR1 to send an idle frame as first transmission.
7. Write the data to send in the USART_TDR register (this clears the TXE bit). Repeat this for each data to be transmitted in case of single buffer.
8. After writing the last data into the USART_TDR register, wait until TC=1. This indicates that the transmission of the last frame is complete. This is required for instance when the USART is disabled or enters the Halt mode to avoid corrupting the last transmission.

Single byte communication

Clearing the TXE bit is always performed by a write to the transmit data register.

The TXE bit is set by hardware and it indicates:

- The data has been moved from the USART_TDR register to the shift register and the data transmission has started.
- The USART_TDR register is empty.
- The next data can be written in the USART_TDR register without overwriting the previous data.

This flag generates an interrupt if the TXEIE bit is set.

When a transmission is taking place, a write instruction to the USART_TDR register stores the data in the TDR register; next, the data is copied in the shift register at the end of the currently ongoing transmission.

When no transmission is taking place, a write instruction to the USART_TDR register places the data in the shift register, the data transmission starts, and the TXE bit is set.

If a frame is transmitted (after the stop bit) and the TXE bit is set, the TC bit goes high. An interrupt is generated if the TCIE bit is set in the USART_CR1 register.

After writing the last data in the USART_TDR register, it is mandatory to wait for TC=1 before disabling the USART or causing the microcontroller to enter the low-power mode (see *Figure 360: TC/TXE behavior when transmitting*).

Figure 360. TC/TXE behavior when transmitting

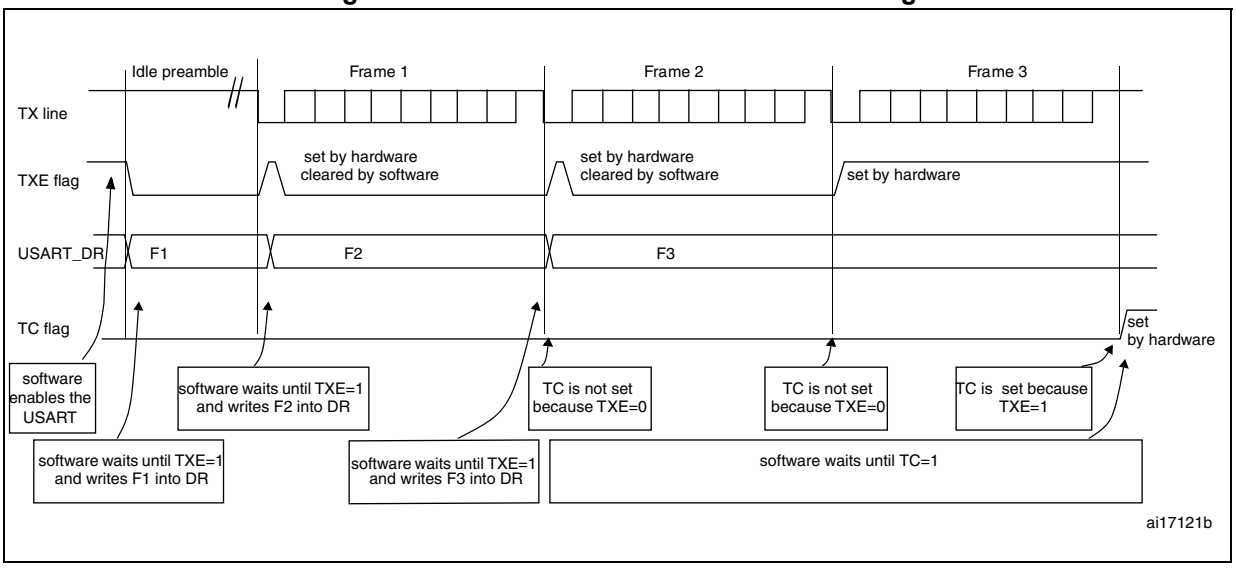

Break characters

Setting the SBKRQ bit transmits a break character. The break frame length depends on the M bits (see *Figure 358*).

If a ‘1’ is written to the SBKRQ bit, a break character is sent on the TX line after completing the current character transmission. The SBKF bit is set by the write operation and it is reset by hardware when the break character is completed (during the stop bits after the break character). The USART inserts a logic 1 signal (STOP) for the duration of 2 bits at the end of the break frame to guarantee the recognition of the start bit of the next frame.

In the case the application needs to send the break character following all previously inserted data, including the ones not yet transmitted, the software should wait for the TXE flag assertion before setting the SBKRQ bit.

Idle characters

Setting the TE bit drives the USART to send an idle frame before the first data frame.

35.5.3 USART receiver

The USART can receive data words of either 7, 8 or 9 bits depending on the M bits in the USART_CR1 register.

Start bit detection

The start bit detection sequence is the same when oversampling by 16 or by 8.

In the USART, the start bit is detected when a specific sequence of samples is recognized. This sequence is: 1 1 1 0 X 0 X 0X 0X 0 X 0X 0.

Figure 361. Start bit detection when oversampling by 16 or 8

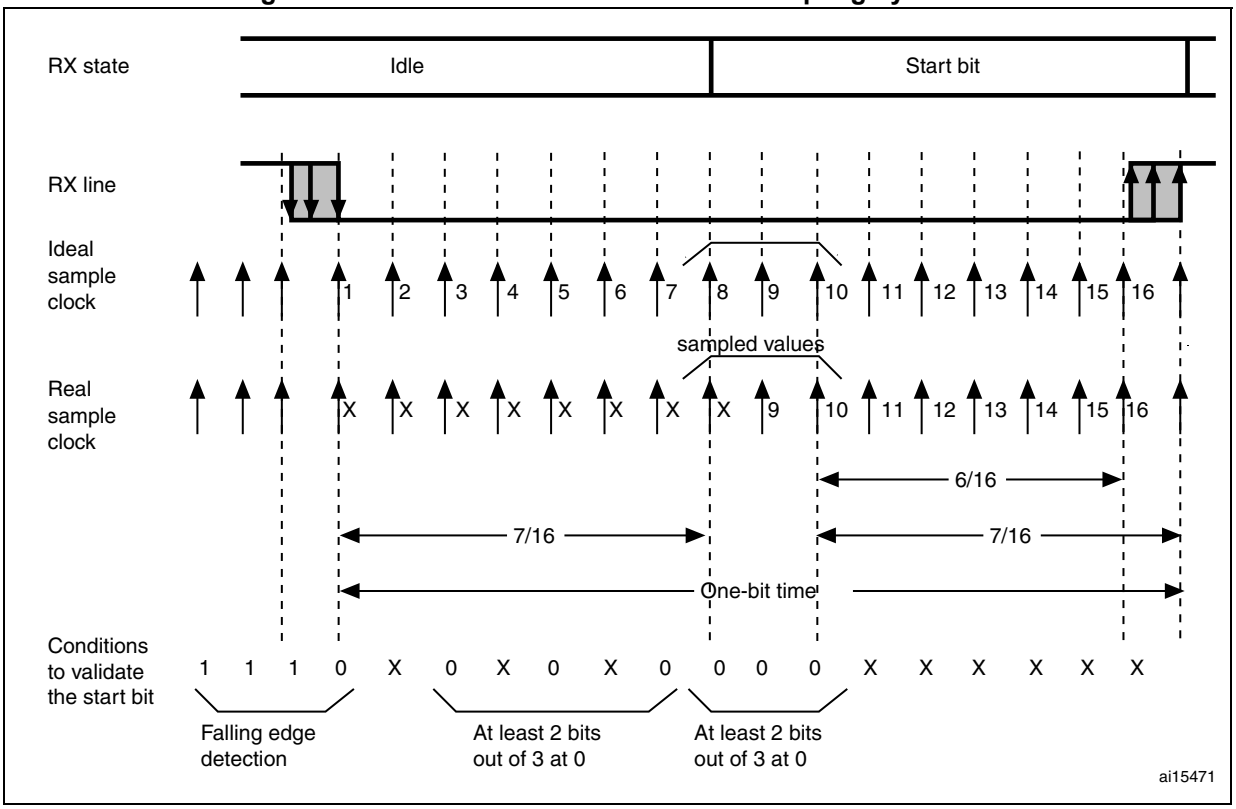

Note: If the sequence is not complete, the start bit detection aborts and the receiver returns to the idle state (no flag is set), where it waits for a falling edge.

The start bit is confirmed (RXNE flag set, interrupt generated if RXNEIE=1) if the 3 sampled bits are at 0 (first sampling on the 3rd, 5th and 7th bits finds the 3 bits at 0 and second sampling on the 8th, 9th and 10th bits also finds the 3 bits at 0).

The start bit is validated (RXNE flag set, interrupt generated if RXNEIE=1) but the NF noise flag is set if,

a) for both samplings, 2 out of the 3 sampled bits are at 0 (sampling on the 3rd, 5th and 7th bits and sampling on the 8th, 9th and 10th bits)

or

b) for one of the samplings (sampling on the 3rd, 5th and 7th bits or sampling on the 8th, 9th and 10th bits), 2 out of the 3 bits are found at 0.

If neither conditions a. or b. are met, the start detection aborts and the receiver returns to the idle state (no flag is set).

Character reception

During an USART reception, data shifts in least significant bit first (default configuration) through the RX pin. In this mode, the USART_RDR register consists of a buffer (RDR) between the internal bus and the receive shift register.

Character reception procedure

1. Program the M bits in USART_CR1 to define the word length.
2. Select the desired baud rate using the baud rate register USART_BRR
3. Program the number of stop bits in USART_CR2.
4. Enable the USART by writing the UE bit in USART_CR1 register to 1.
5. Select DMA enable (DMAR) in USART_CR3 if multibuffer communication is to take place. Configure the DMA register as explained in multibuffer communication.
6. Set the RE bit USART_CR1. This enables the receiver which begins searching for a start bit.

When a character is received:

- The RXNE bit is set to indicate that the content of the shift register is transferred to the RDR. In other words, data has been received and can be read (as well as its associated error flags).
- An interrupt is generated if the RXNEIE bit is set.
- The error flags can be set if a frame error, noise or an overrun error has been detected during reception. PE flag can also be set with RXNE.
- In multibuffer, RXNE is set after every byte received and is cleared by the DMA read of the Receive data Register.
- In single buffer mode, clearing the RXNE bit is performed by a software read to the USART_RDR register. The RXNE flag can also be cleared by writing 1 to the RXFRQ in the USART_RQR register. The RXNE bit must be cleared before the end of the reception of the next character to avoid an overrun error.

Break character

When a break character is received, the USART handles it as a framing error.

Idle character

When an idle frame is detected, there is the same procedure as for a received data character plus an interrupt if the IDLEIE bit is set.

Overrun error

An overrun error occurs when a character is received when RXNE has not been reset. Data can not be transferred from the shift register to the RDR register until the RXNE bit is cleared.

The RXNE flag is set after every byte received. An overrun error occurs if RXNE flag is set when the next data is received or the previous DMA request has not been serviced. When an overrun error occurs:

- The ORE bit is set.
- The RDR content will not be lost. The previous data is available when a read to USART_RDR is performed.
- The shift register will be overwritten. After that point, any data received during overrun is lost.
- An interrupt is generated if either the RXNEIE bit is set or EIE bit is set.
- The ORE bit is reset by setting the ORECF bit in the ICR register.

Note: The ORE bit, when set, indicates that at least 1 data has been lost. There are two possibilities:

- if RXNE=1, then the last valid data is stored in the receive register RDR and can be read,

- if RXNE=0, then it means that the last valid data has already been read and thus there is nothing to be read in the RDR. This case can occur when the last valid data is read in the RDR at the same time as the new (and lost) data is received.

Selecting the clock source and the proper oversampling method

The choice of the clock source is done through the Clock Control system (see Section Reset and clock control (RCC))). The clock source must be chosen before enabling the USART (by setting the UE bit).

The choice of the clock source must be done according to two criteria:

- Possible use of the USART in low-power mode
- Communication speed.

The clock source frequency is f_{CK}.

When the dual clock domain with the wakeup from Stop mode is supported, the clock source can be one of the following sources: PCLK (default), LSE, HSI16 or SYSCLK. Otherwise, the USART clock source is PCLK.

Choosing LSE or HSI16 as clock source may allow the USART to receive data while the MCU is in low-power mode. Depending on the received data and wakeup mode selection, the USART wakes up the MCU, when needed, in order to transfer the received data by software reading the USART_RDR register or by DMA.

For the other clock sources, the system must be active in order to allow USART communication.

The communication speed range (specially the maximum communication speed) is also determined by the clock source.

The receiver implements different user-configurable oversampling techniques for data recovery by discriminating between valid incoming data and noise. This allows a trade-off between the maximum communication speed and noise/clock inaccuracy immunity.

The oversampling method can be selected by programming the OVER8 bit in the USART_CR1 register and can be either 16 or 8 times the baud rate clock (*Figure 362* and *Figure 363*).

Depending on the application:

- Select oversampling by 8 (OVER8=1) to achieve higher speed (up to $f_{CK}/8$). In this case the maximum receiver tolerance to clock deviation is reduced (refer to *Section 35.5.5: Tolerance of the USART receiver to clock deviation on page 1051*)
- Select oversampling by 16 (OVER8=0) to increase the tolerance of the receiver to clock deviations. In this case, the maximum speed is limited to maximum $f_{CK}/16$ where f_{CK} is the clock source frequency.

Programming the ONEBIT bit in the USART_CR3 register selects the method used to evaluate the logic level. There are two options:

- The majority vote of the three samples in the center of the received bit. In this case, when the 3 samples used for the majority vote are not equal, the NF bit is set
- A single sample in the center of the received bit

  Depending on the application:

  – select the three samples' majority vote method (ONEBIT=0) when operating in a noisy environment and reject the data when a noise is detected (refer to *Figure 155*) because this indicates that a glitch occurred during the sampling.

  – select the single sample method (ONEBIT=1) when the line is noise-free to increase the receiver's tolerance to clock deviations (see *Section 35.5.5: Tolerance of the USART receiver to clock deviation on page 1051*). In this case the NF bit will never be set.

When noise is detected in a frame:

- The NF bit is set at the rising edge of the RXNE bit.
- The invalid data is transferred from the Shift register to the USART_RDR register.
- No interrupt is generated in case of single byte communication. However this bit rises at the same time as the RXNE bit which itself generates an interrupt. In case of multibuffer communication an interrupt will be issued if the EIE bit is set in the USART_CR3 register.

The NF bit is reset by setting NFCF bit in ICR register.

Note: Oversampling by 8 is not available in LIN, Smartcard and IrDA modes. In those modes, the OVER8 bit is forced to '0' by hardware.

Figure 362. Data sampling when oversampling by 16

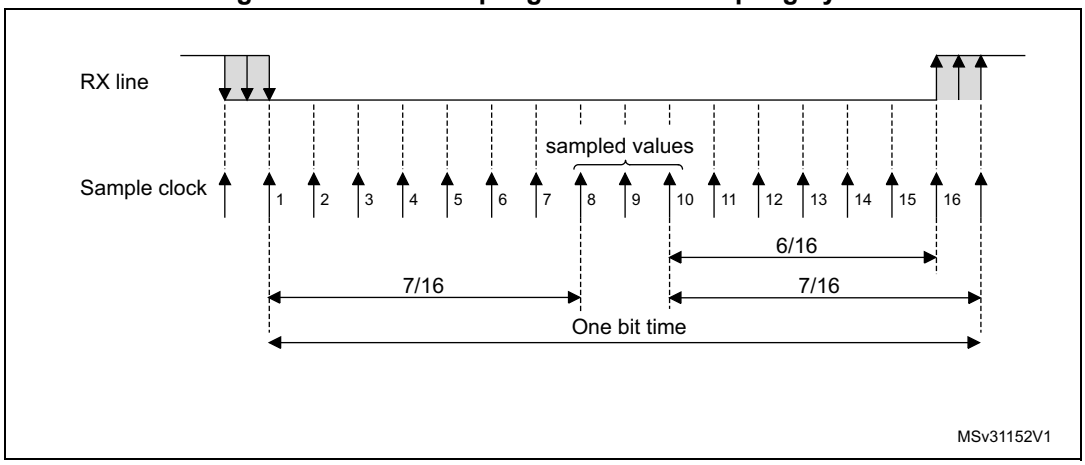

Figure 363. Data sampling when oversampling by 8

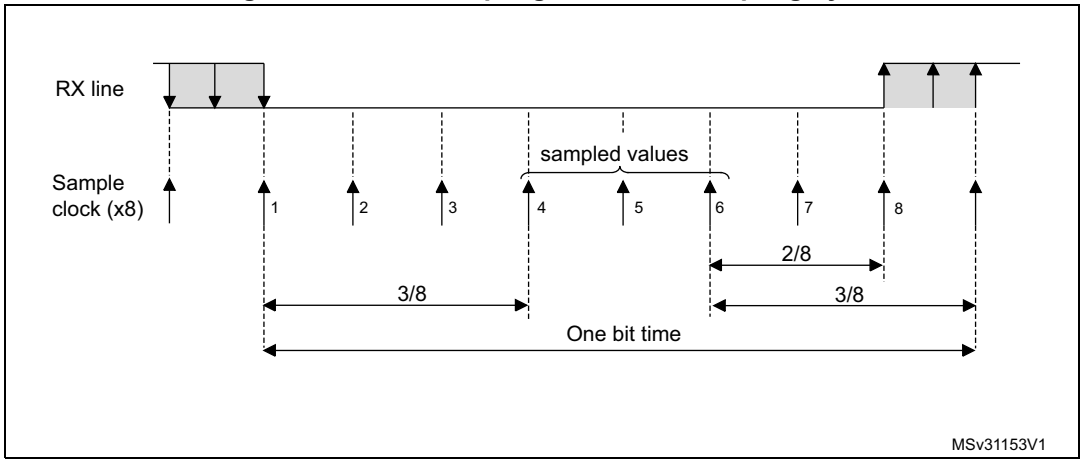

Table 155. Noise detection from sampled data

Sampled value	NE status	Received bit value
000	0	0
001	1	0
010	1	0
011	1	1
100	1	0
101	1	1
110	1	1
111	0	1

Framing error

A framing error is detected when the stop bit is not recognized on reception at the expected time, following either a de-synchronization or excessive noise.

When the framing error is detected:

- The FE bit is set by hardware
- The invalid data is transferred from the Shift register to the USART_RDR register.
- No interrupt is generated in case of single byte communication. However this bit rises at the same time as the RXNE bit which itself generates an interrupt. In case of multibuffer communication an interrupt will be issued if the EIE bit is set in the USART_CR3 register.

The FE bit is reset by writing 1 to the FECF in the USART_ICR register.

Configurable stop bits during reception

The number of stop bits to be received can be configured through the control bits of Control Register 2 - it can be either 1 or 2 in normal mode and 0.5 or 1.5 in Smartcard mode.

- ***0.5 stop bit (reception in Smartcard mode)****: No sampling is done for 0.5 stop bit. As a consequence, no framing error and no break frame can be detected when 0.5 stop bit is selected.*
- ***1 stop bit***: Sampling for 1 stop Bit is done on the 8th, 9th and 10th samples.
- ***1.5 stop bits (Smartcard mode)***: When transmitting in Smartcard mode, the device must check that the data is correctly sent. Thus the receiver block must be enabled (RE =1 in the USART_CR1 register) and the stop bit is checked to test if the smartcard has detected a parity error. In the event of a parity error, the smartcard forces the data signal low during the sampling - NACK signal-, which is flagged as a framing error. Then, the FE flag is set with the RXNE at the end of the 1.5 stop bits. Sampling for 1.5 stop bits is done on the 16th, 17th and 18th samples (1 baud clock period after the beginning of the stop bit). The 1.5 stop bits can be decomposed into 2 parts: one 0.5 baud clock period during which nothing happens, followed by 1 normal stop bit period during which sampling occurs halfway through. Refer to *Section 35.5.13: USART Smartcard mode on page 1062* for more details.
- ***2 stop bits***: Sampling for 2 stop bits is done on the 8th, 9th and 10th samples of the first stop bit. If a framing error is detected during the first stop bit the framing error flag will be set. The second stop bit is not checked for framing error. The RXNE flag will be set at the end of the first stop bit.

35.5.4 USART baud rate generation

The baud rate for the receiver and transmitter (Rx and Tx) are both set to the same value as programmed in the USART_BRR register.

Equation 1: Baud rate for standard USART (SPI mode included) (OVER8 = 0 or 1)

In case of oversampling by 16, the equation is:

$$\text{Tx/Rx baud} = \frac{f_{CK}}{\text{USARTDIV}}$$

In case of oversampling by 8, the equation is:

$$\text{Tx/Rx baud} = \frac{2 \times f_{CK}}{\text{USARTDIV}}$$

Equation 2: Baud rate in Smartcard, LIN and IrDA modes (OVER8 = 0)

In Smartcard, LIN and IrDA modes, only Oversampling by 16 is supported:

$$\text{Tx/Rx baud} = \frac{f_{CK}}{\text{USARTDIV}}$$

USARTDIV is an unsigned fixed point number that is coded on the USART_BRR register.

- When OVER8 = 0, BRR = USARTDIV.
- When OVER8 = 1
  - BRR[2:0] = USARTDIV[3:0] shifted 1 bit to the right.
  - BRR[3] must be kept cleared.
  - BRR[15:4] = USARTDIV[15:4]

Note: The baud counters are updated to the new value in the baud registers after a write operation to USART_BRR. Hence the baud rate register value should not be changed during communication.

In case of oversampling by 16 or 8, USARTDIV must be greater than or equal to 0d16.

How to derive USARTDIV from USART_BRR register values

Example 1

To obtain 9600 baud with f_{CK} = 8 MHz.

- In case of oversampling by 16:
  USARTDIV = 8 000 000/9600
  BRR = USARTDIV = 833d = 0341h
- In case of oversampling by 8:
  USARTDIV = 2 * 8 000 000/9600
  USARTDIV = 1666,66 (1667d = 683h)
  BRR[3:0] = 3h << 1 = 1h
  BRR = 0x681

Example 2

To obtain 921.6 Kbaud with f_{CK} = 48 MHz.

- In case of oversampling by 16:
  USARTDIV = 48 000 000/921 600
  BRR = USARTDIV = 52d = 34h
- In case of oversampling by 8:
  USARTDIV = 2 * 48 000 000/921 600
  USARTDIV = 104 (104d = 68h)
  BRR[3:0] = USARTDIV[3:0] >> 1 = 8h >> 1 = 4h
  BRR = 0x64

Table 156. Error calculation for programmed baud rates at f_{CK} = 72MHz in both cases of oversampling by 16 or by 8(1)

Baud rate		Oversampling by 16 (OVER8 = 0)			Oversampling by 8 (OVER8 = 1)		
S.No	Desired	Actual	BRR	% Error = (Calculated - Desired)B.Rate / Desired B.Rate	Actual	BRR	% Error
1	2.4 KBps	2.4 KBps	0x7530	0	2.4 KBps	0xEA60	0
2	9.6 KBps	9.6 KBps	0x1D4C	0	9.6 KBps	0x3A94	0
3	19.2 KBps	19.2 KBps	0xEA6	0	19.2 KBps	0x1D46	0
4	38.4 KBps	38.4 KBps	0x753	0	38.4 KBps	0xEA3	0
5	57.6 KBps	57.6 KBps	0x4E2	0	57.6 KBps	0x9C2	0
6	115.2 KBps	115.2 KBps	0x271	0	115.2 KBps	0x4E1	0
7	230.4 KBps	230.03KBps	0x139	0.16	230.4 KBps	0x270	0
8	460.8 KBps	461.54KBps	0x9C	0.16	460.06KBps	0x134	0.16
9	921.6 KBps	923.08KBps	0x4E	0.16	923.07KBps	0x96	0.16
10	2 MBps	2 MBps	0x24	0	2 MBps	0x44	0
11	3 MBps	3 MBps	0x18	0	3 MBps	0x30	0
12	4MBps	4MBps	0x12	0	4MBps	0x22	0
13	5MBps	N.A	N.A	N.A	4965.51KBps	0x16	0.69
14	6MBps	N.A	N.A	N.A	6MBps	0x14	0
15	7MBps	N.A	N.A	N.A	6857.14KBps	0x12	2
16	9MBps	N.A	N.A	N.A	9MBps	0x10	0

1. The lower the CPU clock the lower the accuracy for a particular baud rate. The upper limit of the achievable baud rate can be fixed with these data.

35.5.5 Tolerance of the USART receiver to clock deviation

The asynchronous receiver of the USART works correctly only if the total clock system deviation is less than the tolerance of the USART receiver. The causes which contribute to the total deviation are:

- DTRA: Deviation due to the transmitter error (which also includes the deviation of the transmitter's local oscillator)
- DQUANT: Error due to the baud rate quantization of the receiver
- DREC: Deviation of the receiver's local oscillator
- DTCL: Deviation due to the transmission line (generally due to the transceivers which can introduce an asymmetry between the low-to-high transition timing and the high-to-low transition timing)

$$\text{DTRA} + \text{DQUANT} + \text{DREC} + \text{DTCL} + \text{DWU} < \text{USART receiver's tolerance}$$

where

DWU is the error due to sampling point deviation when the wakeup from Stop mode is used.

when M[1:0] = 01:

$$\text{DWU} = \frac{t_{\text{WUUSART}}}{11 \times \text{Tbit}}$$

when M[1:0] = 00:

$$\text{DWU} = \frac{t_{\text{WUUSART}}}{10 \times \text{Tbit}}$$

when M[1:0] = 10:

$$\text{DWU} = \frac{t_{\text{WUUSART}}}{9 \times \text{Tbit}}$$

t_{WUUSART} is the time between detecting the wakeup event and both clock (requested by the peripheral) and regulator ready.

The USART receiver can receive data correctly at up to the maximum tolerated deviation specified in *Table 157* and *Table 157* depending on the following choices:

- 9-, 10- or 11-bit character length defined by the M bits in the USART_CR1 register
- Oversampling by 8 or 16 defined by the OVER8 bit in the USART_CR1 register
- Bits BRR[3:0] of USART_BRR register are equal to or different from 0000.
- Use of 1 bit or 3 bits to sample the data, depending on the value of the ONEBIT bit in the USART_CR3 register.

Table 157. Tolerance of the USART receiver when BRR [3:0] = 0000

M bits	OVER8 bit = 0		OVER8 bit = 1	
	ONEBIT=0	ONEBIT=1	ONEBIT=0	ONEBIT=1
00	3.75%	4.375%	2.50%	3.75%
01	3.41%	3.97%	2.27%	3.41%
10	4.16%	4.86%	2.77%	4.16%

Table 158. Tolerance of the USART receiver when BRR [3:0] is different from 0000

M bits	OVER8 bit = 0		OVER8 bit = 1	
	ONEBIT=0	ONEBIT=1	ONEBIT=0	ONEBIT=1
00	3.33%	3.88%	2%	3%
01	3.03%	3.53%	1.82%	2.73%
10	3.7%	4.31%	2.22%	3.33%

Note: The data specified in Table 157 and Table 158 may slightly differ in the special case when the received frames contain some Idle frames of exactly 10-bit durations when M bits = 00 (11-bit durations when M bits =01 or 9- bit durations when M bits = 10).

35.5.6 USART auto baud rate detection

The USART is able to detect and automatically set the USART_BRR register value based on the reception of one character. Automatic baud rate detection is useful under two circumstances:

- The communication speed of the system is not known in advance
- The system is using a relatively low accuracy clock source and this mechanism allows the correct baud rate to be obtained without measuring the clock deviation.

The clock source frequency must be compatible with the expected communication speed (when oversampling by 16, the baud rate is between $f_{CK}/65535$ and $f_{CK}/16$. when oversampling by 8, the baudrate is between $f_{CK}/65535$ and $f_{CK}/8$).

Before activating the auto baud rate detection, the auto baud rate detection mode must be chosen. There are various modes based on different character patterns.

They can be chosen through the ABRMOD[1:0] field in the USART_CR2 register. In these auto baud rate modes, the baud rate is measured several times during the synchronization data reception and each measurement is compared to the previous one.

These modes are:

- **Mode 0**: Any character starting with a bit at 1. In this case the USART measures the duration of the Start bit (falling edge to rising edge).
- **Mode 1:** Any character starting with a 10xx bit pattern. In this case, the USART measures the duration of the Start and of the 1st data bit. The measurement is done falling edge to falling edge, ensuring better accuracy in the case of slow signal slopes.
- **Mode 2**: A 0x7F character frame (it may be a 0x7F character in LSB first mode or a 0xFE in MSB first mode). In this case, the baudrate is updated first at the end of the start bit (BRs), then at the end of bit 6 (based on the measurement done from falling edge to falling edge: BR6). Bit 0 to bit 6 are sampled at BRs while further bits of the character are sampled at BR6.
- **Mode 3**: A 0x55 character frame. In this case, the baudrate is updated first at the end of the start bit (BRs), then at the end of bit 0 (based on the measurement done from falling edge to falling edge: BR0), and finally at the end of bit 6 (BR6). Bit 0 is sampled

at BRs, bit 1 to bit 6 are sampled at BR0, and further bits of the character are sampled at BR6.

In parallel, another check is performed for each intermediate transition of RX line. An error is generated if the transitions on RX are not sufficiently synchronized with the receiver (the receiver being based on the baud rate calculated on bit 0).

Prior to activating auto baud rate detection, the USART_BRR register must be initialized by writing a non-zero baud rate value.

The automatic baud rate detection is activated by setting the ABREN bit in the USART_CR2 register. The USART will then wait for the first character on the RX line. The auto baud rate operation completion is indicated by the setting of the ABRF flag in the USART_ISR register. If the line is noisy, the correct baud rate detection cannot be guaranteed. In this case the BRR value may be corrupted and the ABRE error flag will be set. This also happens if the communication speed is not compatible with the automatic baud rate detection range (bit duration not between 16 and 65536 clock periods (oversampling by 16) and not between 8 and 65536 clock periods (oversampling by 8)).

The RXNE interrupt will signal the end of the operation.

At any later time, the auto baud rate detection may be relaunched by resetting the ABRF flag (by writing a 0).

Note: If the USART is disabled (UE=0) during an auto baud rate operation, the BRR value may be corrupted.

35.5.7 Multiprocessor communication using USART

In multiprocessor communication, the following bits are to be kept cleared:

- LINEN bit in the USART_CR2 register,
- HDSEL, IREN and SCEN bits in the USART_CR3 register.

It is possible to perform multiprocessor communication with the USART (with several USARTs connected in a network). For instance one of the USARTs can be the master, its TX output connected to the RX inputs of the other USARTs. The others are slaves, their respective TX outputs are logically ANDed together and connected to the RX input of the master.

In multiprocessor configurations it is often desirable that only the intended message recipient should actively receive the full message contents, thus reducing redundant USART service overhead for all non addressed receivers.

The non addressed devices may be placed in mute mode by means of the muting function. In order to use the mute mode feature, the MME bit must be set in the USART_CR1 register.

In mute mode:

- None of the reception status bits can be set.
- All the receive interrupts are inhibited.
- The RWU bit in USART_ISR register is set to 1. RWU can be controlled automatically by hardware or by software, through the MMRQ bit in the USART_RQR register, under certain conditions.

The USART can enter or exit from mute mode using one of two methods, depending on the WAKE bit in the USART_CR1 register:

- Idle Line detection if the WAKE bit is reset,
- Address Mark detection if the WAKE bit is set.

Idle line detection (WAKE=0)

The USART enters mute mode when the MMRQ bit is written to 1 and the RWU is automatically set.

It wakes up when an Idle frame is detected. Then the RWU bit is cleared by hardware but the IDLE bit is not set in the USART_ISR register. An example of mute mode behavior using Idle line detection is given in *Figure 364*.

Figure 364. Mute mode using Idle line detection

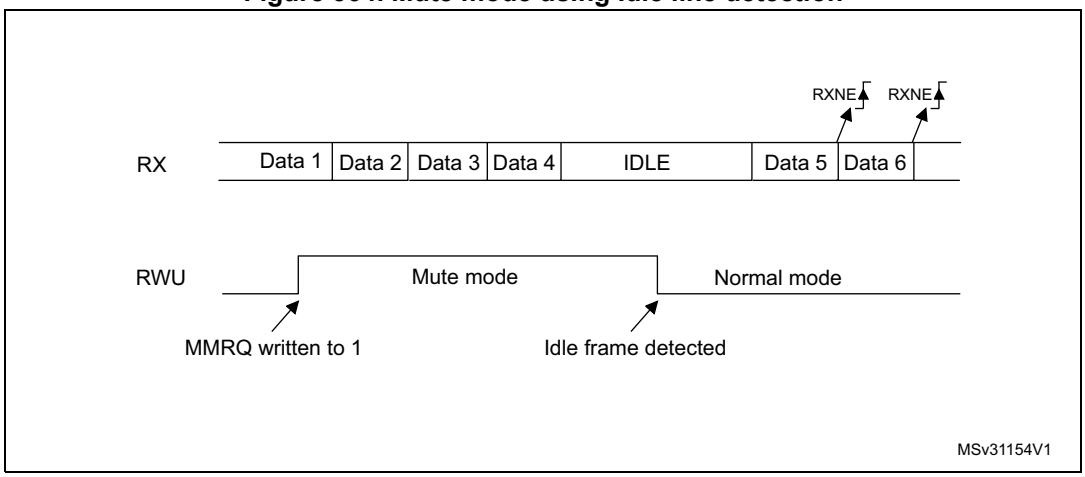

Note: If the MMRQ is set while the IDLE character has already elapsed, mute mode will not be entered (RWU is not set).

If the USART is activated while the line is IDLE, the idle state is detected after the duration of one IDLE frame (not only after the reception of one character frame).

4-bit/7-bit address mark detection (WAKE=1)

In this mode, bytes are recognized as addresses if their MSB is a ‘1’ otherwise they are considered as data. In an address byte, the address of the targeted receiver is put in the 4 or 7 LSBs. The choice of 7 or 4-bit address detection is done using the ADDM7 bit. This 4-bit/7-bit word is compared by the receiver with its own address which is programmed in the ADD bits in the USART_CR2 register.

Note: In 7-bit and 9-bit data modes, address detection is done on 6-bit and 8-bit addresses (ADD[5:0] and ADD[7:0]) respectively.

The USART enters mute mode when an address character is received which does not match its programmed address. In this case, the RWU bit is set by hardware. The RXNE flag is not set for this address byte and no interrupt or DMA request is issued when the USART enters mute mode.

The USART also enters mute mode when the MMRQ bit is written to 1. The RWU bit is also automatically set in this case.

The USART exits from mute mode when an address character is received which matches the programmed address. Then the RWU bit is cleared and subsequent bytes are received normally. The RXNE bit is set for the address character since the RWU bit has been cleared.

An example of mute mode behavior using address mark detection is given in *Figure 365*.

Figure 365. Mute mode using address mark detection

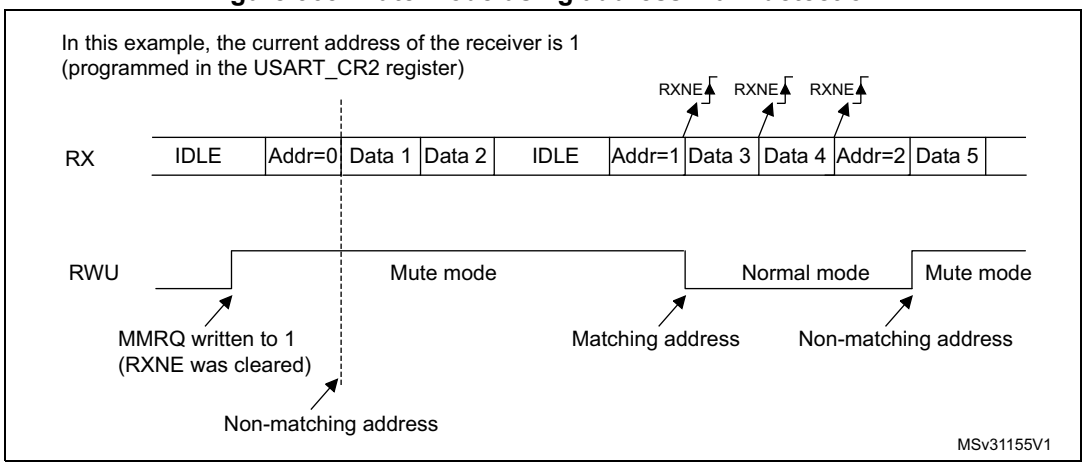

35.5.8 Modbus communication using USART

The USART offers basic support for the implementation of Modbus/RTU and Modbus/ASCII protocols. Modbus/RTU is a half duplex, block transfer protocol. The control part of the protocol (address recognition, block integrity control and command interpretation) must be implemented in software.

The USART offers basic support for the end of the block detection, without software overhead or other resources.

Modbus/RTU

In this mode, the end of one block is recognized by a “silence” (idle line) for more than 2 character times. This function is implemented through the programmable timeout function.

The timeout function and interrupt must be activated, through the RTOEN bit in the USART_CR2 register and the RTOIE in the USART_CR1 register. The value corresponding to a timeout of 2 character times (for example 22 x bit duration) must be programmed in the RTO register. when the receive line is idle for this duration, after the last stop bit is received, an interrupt is generated, informing the software that the current block reception is completed.

Modbus/ASCII

In this mode, the end of a block is recognized by a specific (CR/LF) character sequence. The USART manages this mechanism using the character match function.

By programming the LF ASCII code in the ADD[7:0] field and by activating the character match interrupt (CMIE=1), the software is informed when a LF has been received and can check the CR/LF in the DMA buffer.

35.5.9 USART parity control

Parity control (generation of parity bit in transmission and parity checking in reception) can be enabled by setting the PCE bit in the USART_CR1 register. Depending on the frame length defined by the M bits, the possible USART frame formats are as listed in *Table 159*.

Table 159. Frame formats

M bits	PCE bit	USART frame[1]
00	0	| SB | 8-bit data | STB |
00	1	| SB | 7-bit data | PB | STB |
01	0	| SB | 9-bit data | STB |
01	1	| SB | 8-bit data | PB | STB |
10	0	| SB | 7-bit data | STB |
10	1	| SB | 6-bit data | PB | STB |

1. Legends: SB: start bit, STB: stop bit, PB: parity bit. In the data register, the PB is always taking the MSB position (9th, 8th or 7th, depending on the M bits value).

Even parity

The parity bit is calculated to obtain an even number of “1s” inside the frame of the 6, 7 or 8 LSB bits (depending on M bits values) and the parity bit.

As an example, if data=00110101, and 4 bits are set, then the parity bit will be 0 if even parity is selected (PS bit in USART_CR1 = 0).

Odd parity

The parity bit is calculated to obtain an odd number of “1s” inside the frame made of the 6, 7 or 8 LSB bits (depending on M bits values) and the parity bit.

As an example, if data=00110101 and 4 bits set, then the parity bit will be 1 if odd parity is selected (PS bit in USART_CR1 = 1).

Parity checking in reception

If the parity check fails, the PE flag is set in the USART_ISR register and an interrupt is generated if PEIE is set in the USART_CR1 register. The PE flag is cleared by software writing 1 to the PECF in the USART_ICR register.

Parity generation in transmission

If the PCE bit is set in USART_CR1, then the MSB bit of the data written in the data register is transmitted but is changed by the parity bit (even number of “1s” if even parity is selected (PS=0) or an odd number of “1s” if odd parity is selected (PS=1)).

35.5.10 USART LIN (local interconnection network) mode

This section is relevant only when LIN mode is supported. Please refer to *Section 35.4: USART implementation on page 1035*.

The LIN mode is selected by setting the LINEN bit in the USART_CR2 register. In LIN mode, the following bits must be kept cleared:

- STOP[1:0] and CLKEN in the USART_CR2 register,
- SCEN, HDSEL and IREN in the USART_CR3 register.

LIN transmission

The procedure explained in *Section 35.5.2: USART transmitter* has to be applied for LIN Master transmission. It must be the same as for normal USART transmission with the following differences:

- Clear the M bits to configure 8-bit word length.
- Set the LINEN bit to enter LIN mode. In this case, setting the SBKRQ bit sends 13 ‘0’ bits as a break character. Then 2 bits of value ‘1’ are sent to allow the next start detection.

LIN reception

When LIN mode is enabled, the break detection circuit is activated. The detection is totally independent from the normal USART receiver. A break can be detected whenever it occurs, during Idle state or during a frame.

When the receiver is enabled (RE=1 in USART_CR1), the circuit looks at the RX input for a start signal. The method for detecting start bits is the same when searching break characters or data. After a start bit has been detected, the circuit samples the next bits exactly like for the data (on the 8th, 9th and 10th samples). If 10 (when the LBDL = 0 in USART_CR2) or 11 (when LBDL=1 in USART_CR2) consecutive bits are detected as ‘0, and are followed by a delimiter character, the LBDF flag is set in USART_ISR. If the LBDIE bit=1, an interrupt is generated. Before validating the break, the delimiter is checked for as it signifies that the RX line has returned to a high level.

If a ‘1’ is sampled before the 10 or 11 have occurred, the break detection circuit cancels the current detection and searches for a start bit again.

If the LIN mode is disabled (LINEN=0), the receiver continues working as normal USART, without taking into account the break detection.

If the LIN mode is enabled (LINEN=1), as soon as a framing error occurs (i.e. stop bit detected at ‘0’, which will be the case for any break frame), the receiver stops until the break detection circuit receives either a ‘1’, if the break word was not complete, or a delimiter character if a break has been detected.

The behavior of the break detector state machine and the break flag is shown on the *Figure 366: Break detection in LIN mode (11-bit break length - LBDL bit is set) on page 1058*.

Examples of break frames are given on *Figure 367: Break detection in LIN mode vs. Framing error detection on page 1059*.

Figure 366. Break detection in LIN mode (11-bit break length - LBDL bit is set)

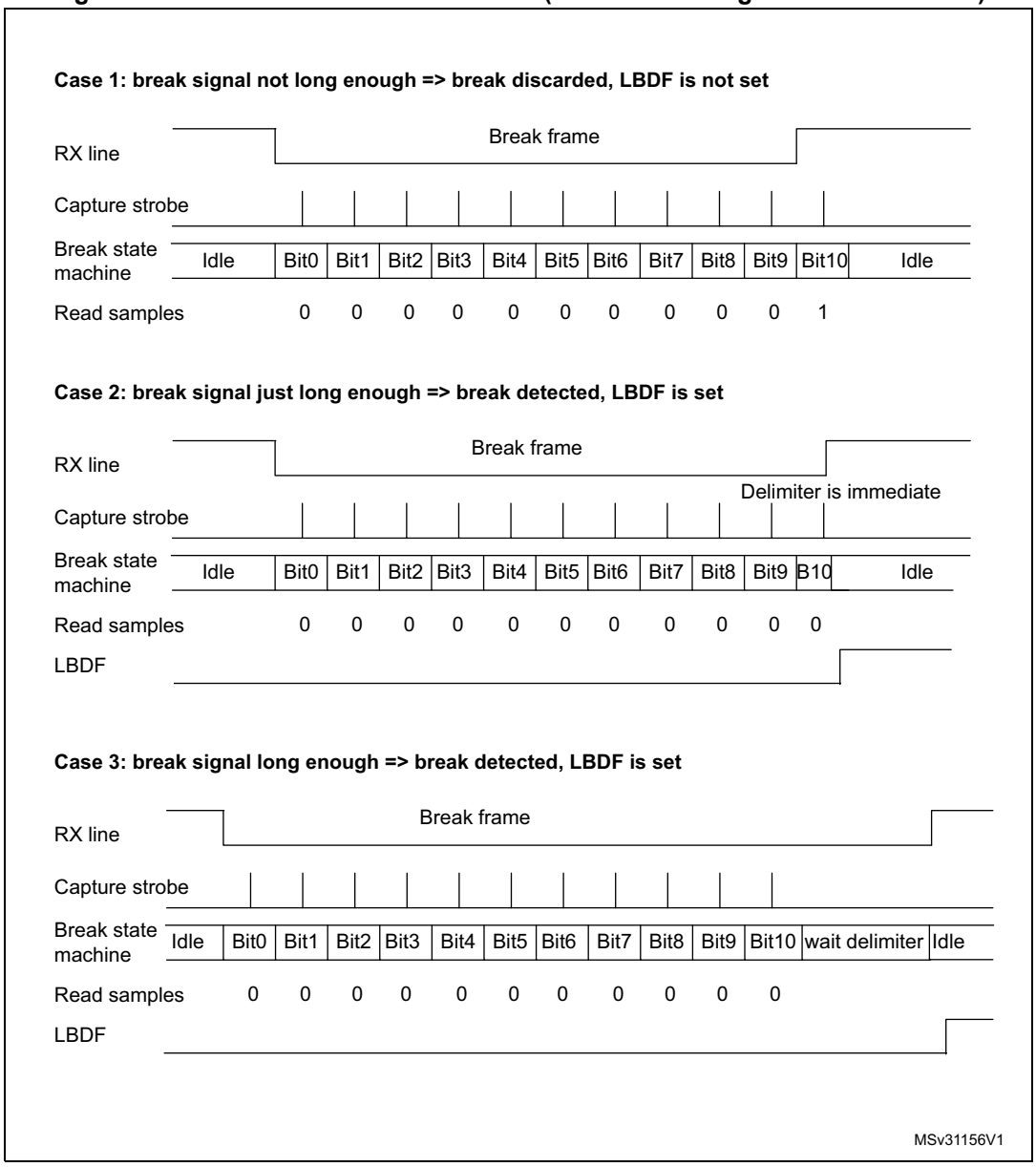

Figure 367. Break detection in LIN mode vs. Framing error detection

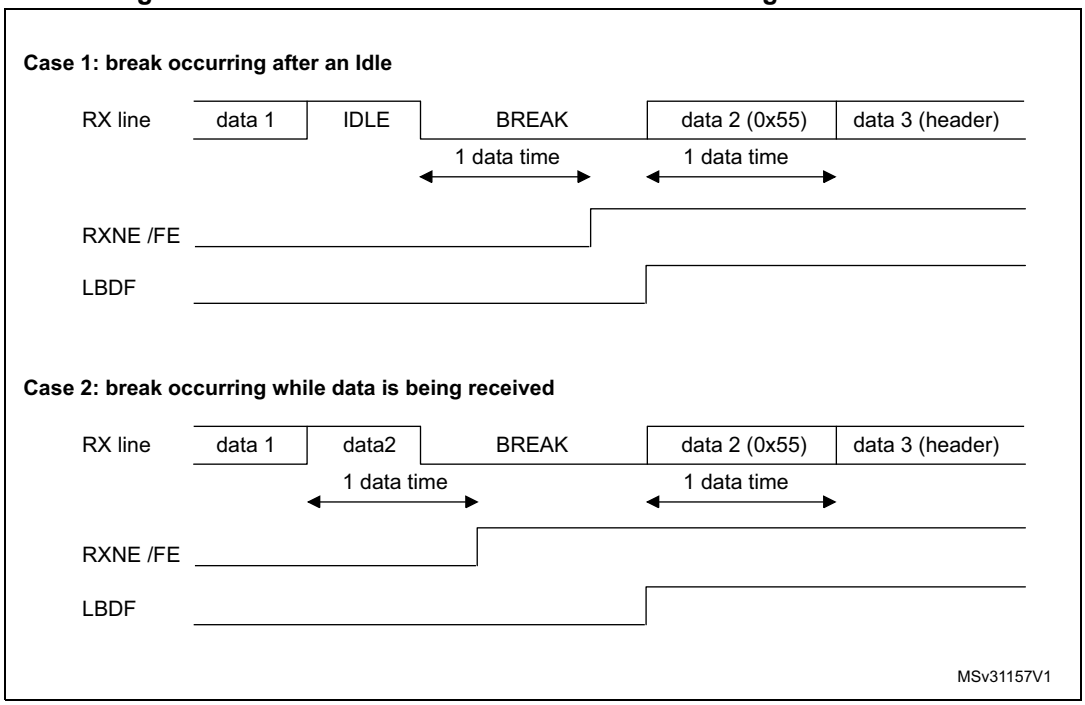

35.5.11 USART synchronous mode

The synchronous mode is selected by writing the CLKEN bit in the USART_CR2 register to 1. In synchronous mode, the following bits must be kept cleared:

- LINEN bit in the USART_CR2 register,
- SCEN, HDSEL and IREN bits in the USART_CR3 register.

In this mode, the USART can be used to control bidirectional synchronous serial communications in master mode. The CK pin is the output of the USART transmitter clock. No clock pulses are sent to the CK pin during start bit and stop bit. Depending on the state of the LBCL bit in the USART_CR2 register, clock pulses are, or are not, generated during the last valid data bit (address mark). The CPOL bit in the USART_CR2 register is used to select the clock polarity, and the CPHA bit in the USART_CR2 register is used to select the phase of the external clock (see *Figure 368*, *Figure 369* and *Figure 370*).

During the Idle state, preamble and send break, the external CK clock is not activated.

In synchronous mode the USART transmitter works exactly like in asynchronous mode. But as CK is synchronized with TX (according to CPOL and CPHA), the data on TX is synchronous.

In this mode the USART receiver works in a different manner compared to the asynchronous mode. If RE=1, the data is sampled on CK (rising or falling edge, depending on CPOL and CPHA), without any oversampling. A setup and a hold time must be respected (which depends on the baud rate: 1/16 bit duration).

Note: The CK pin works in conjunction with the TX pin. Thus, the clock is provided only if the transmitter is enabled (TE=1) and data is being transmitted (the data register USART_TDR written). This means that it is not possible to receive synchronous data without transmitting data.

The LBCL, CPOL and CPHA bits have to be selected when the USART is disabled (UE=0) to ensure that the clock pulses function correctly.

Figure 368. USART example of synchronous transmission

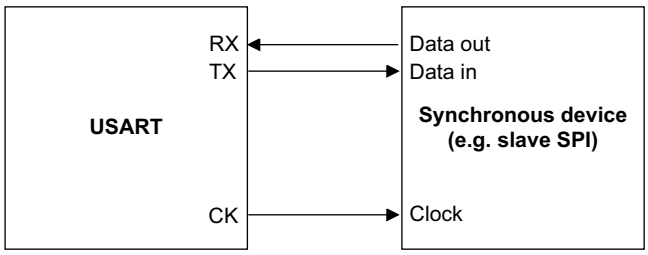

Figure 369. USART data clock timing diagram (M bits = 00**)**

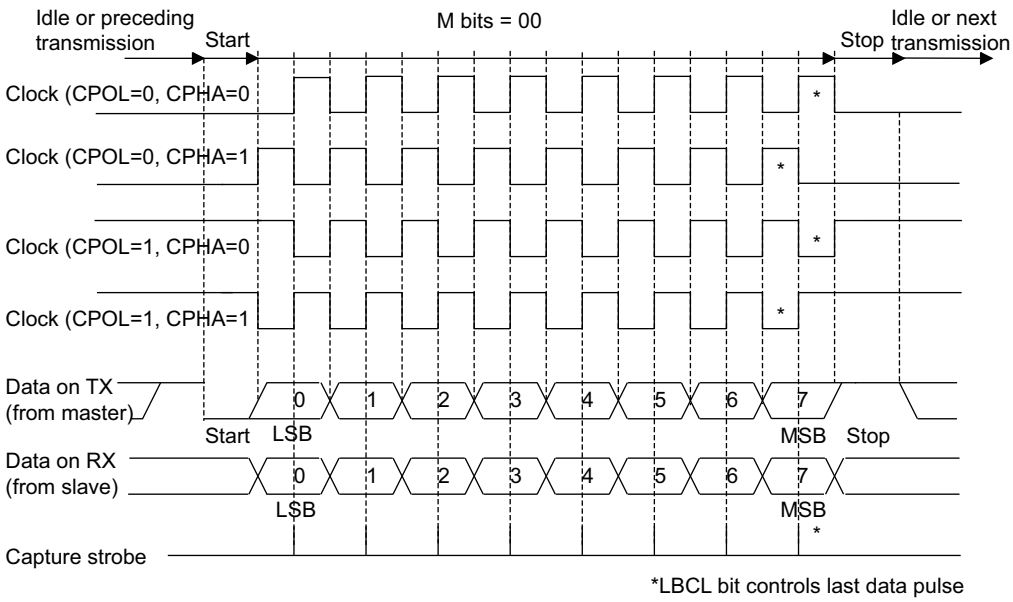

Figure 370. USART data clock timing diagram (M bits = 01)

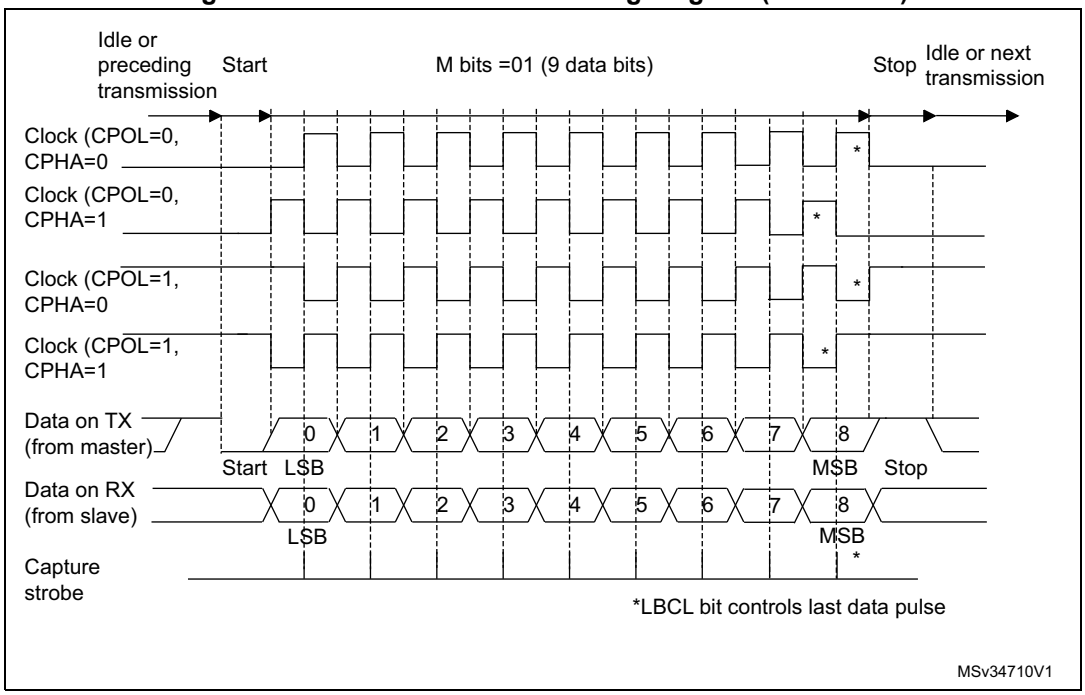

Figure 371. RX data setup/hold time

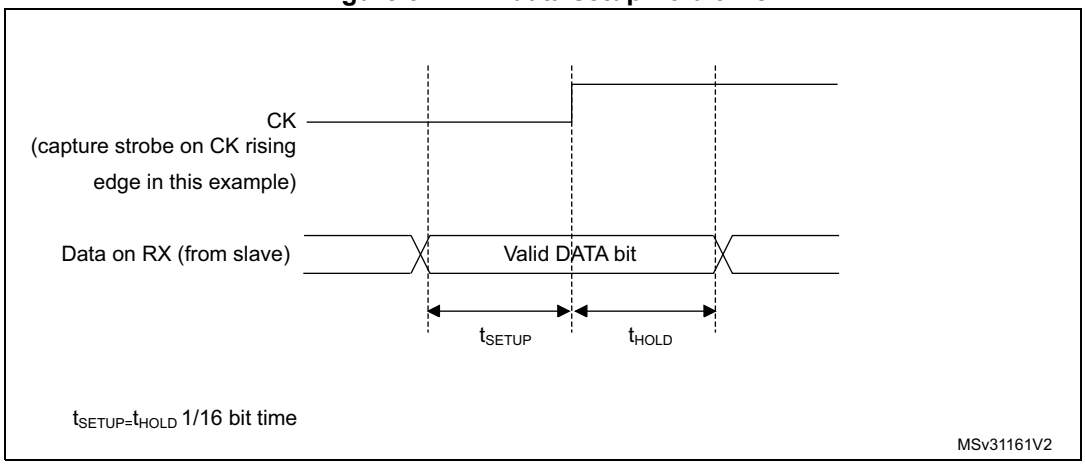

Note: The function of CK is different in Smartcard mode. Refer to Section 35.5.13: USART Smartcard mode for more details.

35.5.12 USART Single-wire Half-duplex communication

Single-wire Half-duplex mode is selected by setting the HDSEL bit in the USART_CR3 register. In this mode, the following bits must be kept cleared:

- LINEN and CLKEN bits in the USART_CR2 register,
- SCEN and IREN bits in the USART_CR3 register.

The USART can be configured to follow a Single-wire Half-duplex protocol where the TX and RX lines are internally connected. The selection between half- and Full-duplex communication is made with a control bit HDSEL in USART_CR3.

As soon as HDSEL is written to 1:

- The TX and RX lines are internally connected
- The RX pin is no longer used
- The TX pin is always released when no data is transmitted. Thus, it acts as a standard I/O in idle or in reception. It means that the I/O must be configured so that TX is configured as alternate function open-drain with an external pull-up.

Apart from this, the communication protocol is similar to normal USART mode. Any conflicts on the line must be managed by software (by the use of a centralized arbiter, for instance). In particular, the transmission is never blocked by hardware and continues as soon as data is written in the data register while the TE bit is set.

35.5.13 USART Smartcard mode

This section is relevant only when Smartcard mode is supported. Please refer to *Section 35.4: USART implementation on page 1035*.

Smartcard mode is selected by setting the SCEN bit in the USART_CR3 register. In Smartcard mode, the following bits must be kept cleared:

- LINEN bit in the USART_CR2 register,
- HDSEL and IREN bits in the USART_CR3 register.

Moreover, the CLKEN bit may be set in order to provide a clock to the smartcard.

The smartcard interface is designed to support asynchronous protocol for smartcards as defined in the ISO 7816-3 standard. Both T=0 (character mode) and T=1 (block mode) are supported.

The USART should be configured as:

- 8 bits plus parity: where word length is set to 8 bits and PCE=1 in the USART_CR1 register
- 1.5 stop bits when transmitting and receiving data: where STOP=11 in the USART_CR2 register. It is also possible to choose 0.5 stop bit for receiving.

In T=0 (character) mode, the parity error is indicated at the end of each character during the guard time period.

Figure 372 shows examples of what can be seen on the data line with and without parity error.

Figure 372. ISO 7816-3 asynchronous protocol

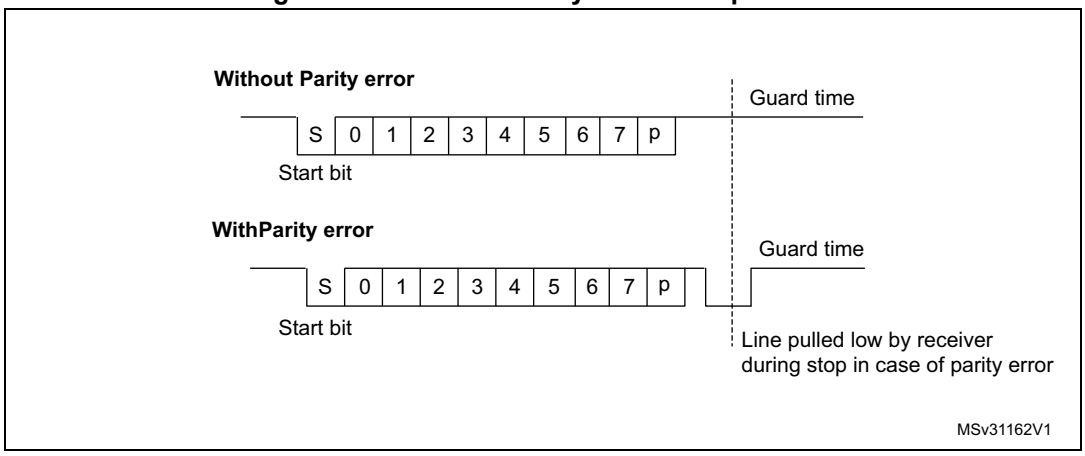

When connected to a smartcard, the TX output of the USART drives a bidirectional line that is also driven by the smartcard. The TX pin must be configured as open drain.

Smartcard mode implements a single wire half duplex communication protocol.

- Transmission of data from the transmit shift register is guaranteed to be delayed by a minimum of 1/2 baud clock. In normal operation a full transmit shift register starts shifting on the next baud clock edge. In Smartcard mode this transmission is further delayed by a guaranteed 1/2 baud clock.
- In transmission, if the smartcard detects a parity error, it signals this condition to the USART by driving the line low (NACK). This NACK signal (pulling transmit line low for 1 baud clock) causes a framing error on the transmitter side (configured with 1.5 stop bits). The USART can handle automatic re-sending of data according to the protocol. The number of retries is programmed in the SCARCNT bit field. If the USART continues receiving the NACK after the programmed number of retries, it stops transmitting and signals the error as a framing error. The TXE bit can be set using the TXFRQ bit in the USART_RQR register.
- Smartcard auto-retry in transmission: a delay of 2.5 baud periods is inserted between the NACK detection by the USART and the start bit of the repeated character. The TC bit is set immediately at the end of reception of the last repeated character (no guard-time). If the software wants to repeat it again, it must insure the minimum 2 baud periods required by the standard.
- If a parity error is detected during reception of a frame programmed with a 1.5 stop bits period, the transmit line is pulled low for a baud clock period after the completion of the receive frame. This is to indicate to the smartcard that the data transmitted to the USART has not been correctly received. A parity error is NACKed by the receiver if the NACK control bit is set, otherwise a NACK is not transmitted (to be used in T=1 mode). If the received character is erroneous, the RXNE/receive DMA request is not activated. According to the protocol specification, the smartcard must resend the same character. If the received character is still erroneous after the maximum number of retries specified in the SCARCNT bit field, the USART stops transmitting the NACK and signals the error as a parity error.
- Smartcard auto-retry in reception: the BUSY flag remains set if the USART NACKs the card but the card doesn’t repeat the character.

- In transmission, the USART inserts the Guard Time (as programmed in the Guard Time register) between two successive characters. As the Guard Time is measured after the stop bit of the previous character, the GT[7:0] register must be programmed to the desired CGT (Character Guard Time, as defined by the 7816-3 specification) minus 12 (the duration of one character).
- The assertion of the TC flag can be delayed by programming the Guard Time register. In normal operation, TC is asserted when the transmit shift register is empty and no further transmit requests are outstanding. In Smartcard mode an empty transmit shift register triggers the Guard Time counter to count up to the programmed value in the Guard Time register. TC is forced low during this time. When the Guard Time counter reaches the programmed value TC is asserted high.
- The TCBGT flag can be used to detect the end of data transfer without waiting for guard time completion. This flag is set just after the end of frame transmission and if no NACK has been received from the card.
- The de-assertion of TC flag is unaffected by Smartcard mode.
- If a framing error is detected on the transmitter end (due to a NACK from the receiver), the NACK is not detected as a start bit by the receive block of the transmitter. According to the ISO protocol, the duration of the received NACK can be 1 or 2 baud clock periods.
- On the receiver side, if a parity error is detected and a NACK is transmitted the receiver does not detect the NACK as a start bit.

Note: A break character is not significant in Smartcard mode. A 0x00 data with a framing error is treated as data and not as a break.

No Idle frame is transmitted when toggling the TE bit. The Idle frame (as defined for the other configurations) is not defined by the ISO protocol.

Figure 373 details how the NACK signal is sampled by the USART. In this example the USART is transmitting data and is configured with 1.5 stop bits. The receiver part of the USART is enabled in order to check the integrity of the data and the NACK signal.

Figure 373. Parity error detection using the 1.5 stop bits

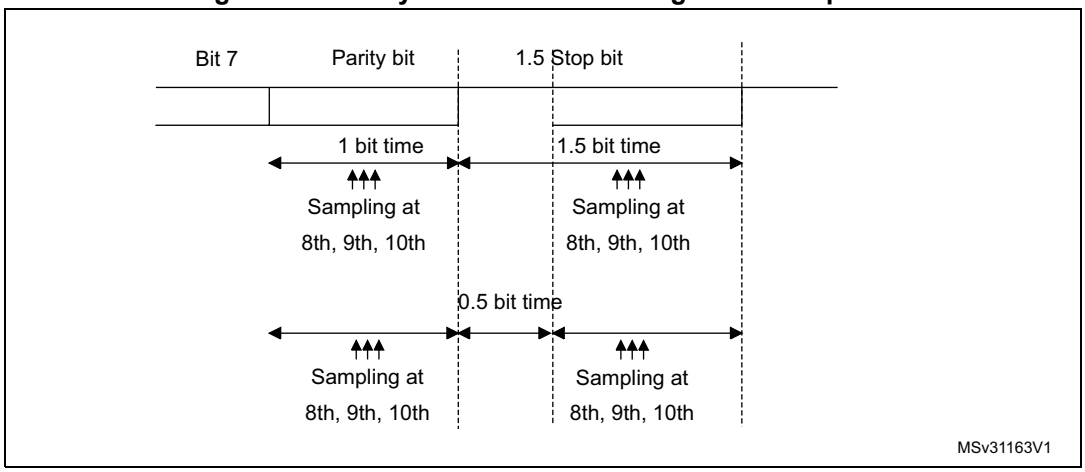

The USART can provide a clock to the smartcard through the CK output. In Smartcard mode, CK is not associated to the communication but is simply derived from the internal peripheral input clock through a 5-bit prescaler. The division ratio is configured in the prescaler register USART_. CK frequency can be programmed from $f_{CK}/2$ to $f_{CK}/62$, where f_{CK} is the peripheral input clock.

Block mode (T=1)

In T=1 (block) mode, the parity error transmission is deactivated, by clearing the NACK bit in the UART_CR3 register.

When requesting a read from the smartcard, in block mode, the software must enable the receiver Timeout feature by setting the RTOEN bit in the USART_CR2 register and program the RTO bits field in the RTOR register to the BWT (block wait time) - 11 value. If no answer is received from the card before the expiration of this period, the RTOF flag will be set and a timeout interrupt will be generated (if RTOIE bit in the USART_CR1 register is set). If the first character is received before the expiration of the period, it is signaled by the RXNE interrupt.

Note: The RXNE interrupt must be enabled even when using the USART in DMA mode to read from the smartcard in block mode. In parallel, the DMA must be enabled only after the first received byte.

After the reception of the first character (RXNE interrupt), the RTO bit fields in the RTOR register must be programmed to the CWT (character wait time) - 11 value, in order to allow the automatic check of the maximum wait time between two consecutive characters. This time is expressed in baudtime units. If the smartcard does not send a new character in less than the CWT period after the end of the previous character, the USART signals this to the software through the RTOF flag and interrupt (when RTOIE bit is set).

Note: The RTO counter starts counting:

- From the end of the stop bit in case STOP = 00.

- From the end of the second stop bit in case of STOP = 10.

- 1 bit duration after the beginning of the STOP bit in case STOP = 11.

- From the beginning of the STOP bit in case STOP = 01.

As in the Smartcard protocol definition, the BWT/CWT values are defined from the beginning (start bit) of the last character. The RTO register must be programmed to BWT - 11 or CWT -11, respectively, taking into account the length of the last character itself.

A block length counter is used to count all the characters received by the USART. This counter is reset when the USART is transmitting (TXE=0). The length of the block is communicated by the smartcard in the third byte of the block (prologue field). This value must be programmed to the BLEN field in the USART_RTOR register. when using DMA mode, before the start of the block, this register field must be programmed to the minimum value (0x0). with this value, an interrupt is generated after the 4th received character. The software must read the LEN field (third byte), its value must be read from the receive buffer.

In interrupt driven receive mode, the length of the block may be checked by software or by programming the BLEN value. However, before the start of the block, the maximum value of BLEN (0xFF) may be programmed. The real value will be programmed after the reception of the third character.

If the block is using the LRC longitudinal redundancy check (1 epilogue byte), the BLEN=LEN. If the block is using the CRC mechanism (2 epilogue bytes), BLEN=LEN+1 must be programmed. The total block length (including prologue, epilogue and information fields) equals BLEN+4. The end of the block is signaled to the software through the EOBF flag and interrupt (when EOBIE bit is set).

In case of an error in the block length, the end of the block is signaled by the RTO interrupt (Character wait Time overflow).

Note: The error checking code (LRC/CRC) must be computed/verified by software.

Direct and inverse convention

The Smartcard protocol defines two conventions: direct and inverse.

The direct convention is defined as: LSB first, logical bit value of 1 corresponds to a H state of the line and parity is even. In order to use this convention, the following control bits must be programmed: MSBFIRST=0, DATAINV=0 (default values).

The inverse convention is defined as: MSB first, logical bit value 1 corresponds to an L state on the signal line and parity is even. In order to use this convention, the following control bits must be programmed: MSBFIRST=1, DATAINV=1.

Note: When logical data values are inverted (0=H, 1=L), the parity bit is also inverted in the same way.

In order to recognize the card convention, the card sends the initial character, TS, as the first character of the ATR (Answer To Reset) frame. The two possible patterns for the TS are: LHHL LLL LLH and LHHL HHH LLH.

- (H) LHHL LLL LLH sets up the inverse convention: state L encodes value 1 and moment 2 conveys the most significant bit (MSB first). when decoded by inverse convention, the conveyed byte is equal to '3F'.
- (H) LHHL HHH LLH sets up the direct convention: state H encodes value 1 and moment 2 conveys the least significant bit (LSB first). when decoded by direct convention, the conveyed byte is equal to '3B'.

Character parity is correct when there is an even number of bits set to 1 in the nine moments 2 to 10.

As the USART does not know which convention is used by the card, it needs to be able to recognize either pattern and act accordingly. The pattern recognition is not done in hardware, but through a software sequence. Moreover, supposing that the USART is configured in direct convention (default) and the card answers with the inverse convention, TS = LHHL LLL LLH => the USART received character will be ‘03’ and the parity will be odd.

Therefore, two methods are available for TS pattern recognition:

Method 1

The USART is programmed in standard Smartcard mode/direct convention. In this case, the TS pattern reception generates a parity error interrupt and error signal to the card.

- The parity error interrupt informs the software that the card didn’t answer correctly in direct convention. Software then reprograms the USART for inverse convention
- In response to the error signal, the card retries the same TS character, and it will be correctly received this time, by the reprogrammed USART

Alternatively, in answer to the parity error interrupt, the software may decide to reprogram the USART and to also generate a new reset command to the card, then wait again for the TS.

Method 2

The USART is programmed in 9-bit/no-parity mode, no bit inversion. In this mode it receives any of the two TS patterns as:

(H) LHHL LLL LLH = 0x103 -> inverse convention to be chosen

(H) LHHL HHH LLH = 0x13B -> direct convention to be chosen

The software checks the received character against these two patterns and, if any of them match, then programs the USART accordingly for the next character reception.

If none of the two is recognized, a card reset may be generated in order to restart the negotiation.

35.5.14 USART IrDA SIR ENDEC block

This section is relevant only when IrDA mode is supported. Please refer to *Section 35.4: USART implementation on page 1035*.

IrDA mode is selected by setting the IREN bit in the USART_CR3 register. In IrDA mode, the following bits must be kept cleared:

- LINEN, STOP and CLKEN bits in the USART_CR2 register,
- SCEN and HDSEL bits in the USART_CR3 register.

The IrDA SIR physical layer specifies use of a Return to Zero, Inverted (RZI) modulation scheme that represents logic 0 as an infrared light pulse (see *Figure 374*).

The SIR Transmit encoder modulates the Non Return to Zero (NRZ) transmit bit stream output from USART. The output pulse stream is transmitted to an external output driver and infrared LED. USART supports only bit rates up to 115.2 Kbps for the SIR ENDEC. In normal mode the transmitted pulse width is specified as 3/16 of a bit period.

The SIR receive decoder demodulates the return-to-zero bit stream from the infrared detector and outputs the received NRZ serial bit stream to the USART. The decoder input is normally high (marking state) in the Idle state. The transmit encoder output has the opposite polarity to the decoder input. A start bit is detected when the decoder input is low.

- IrDA is a half duplex communication protocol. If the Transmitter is busy (when the USART is sending data to the IrDA encoder), any data on the IrDA receive line is ignored by the IrDA decoder and if the Receiver is busy (when the USART is receiving decoded data from the IrDA decoder), data on the TX from the USART to IrDA is not encoded. while receiving data, transmission should be avoided as the data to be transmitted could be corrupted.
- A 0 is transmitted as a high pulse and a 1 is transmitted as a 0. The width of the pulse is specified as 3/16th of the selected bit period in normal mode (see *Figure 375*).
- The SIR decoder converts the IrDA compliant receive signal into a bit stream for USART.
- The SIR receive logic interprets a high state as a logic one and low pulses as logic zeros.
- The transmit encoder output has the opposite polarity to the decoder input. The SIR output is in low state when Idle.

- The IrDA specification requires the acceptance of pulses greater than 1.41 µs. The acceptable pulse width is programmable. Glitch detection logic on the receiver end filters out pulses of width less than 2 PSC periods (PSC is the prescaler value programmed in the USART_GTPR). Pulses of width less than 1 PSC period are always rejected, but those of width greater than one and less than two periods may be accepted or rejected, those greater than 2 periods will be accepted as a pulse. The IrDA encoder/decoder doesn't work when PSC=0.
- The receiver can communicate with a low-power transmitter.
- In IrDA mode, the STOP bits in the USART_CR2 register must be configured to "1 stop bit".

IrDA low-power mode

Transmitter

In low-power mode the pulse width is not maintained at 3/16 of the bit period. Instead, the width of the pulse is 3 times the low-power baud rate which can be a minimum of 1.42 MHz.

Generally, this value is 1.8432 MHz (1.42 MHz < PSC< 2.12 MHz). A low-power mode programmable divisor divides the system clock to achieve this value.

Receiver

Receiving in low-power mode is similar to receiving in normal mode. For glitch detection the USART should discard pulses of duration shorter than 1 PSC period. A valid low is accepted only if its duration is greater than 2 periods of the IrDA low-power Baud clock (PSC value in the USART_GTPR).

Note: A pulse of width less than two and greater than one PSC period(s) may or may not be rejected.

The receiver set up time should be managed by software. The IrDA physical layer specification specifies a minimum of 10 ms delay between transmission and reception (IrDA is a half duplex protocol).

Figure 374. IrDA SIR ENDEC- block diagram

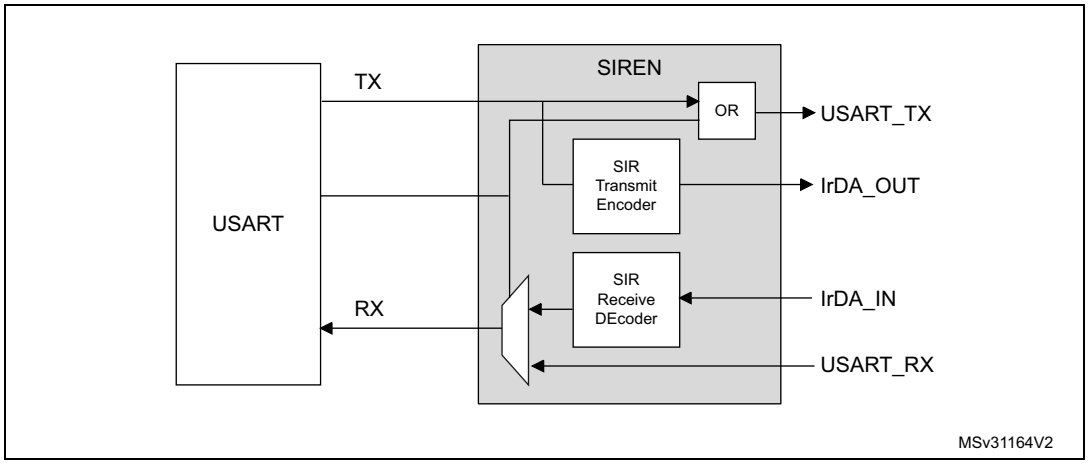

Figure 375. IrDA data modulation (3/16) -Normal Mode

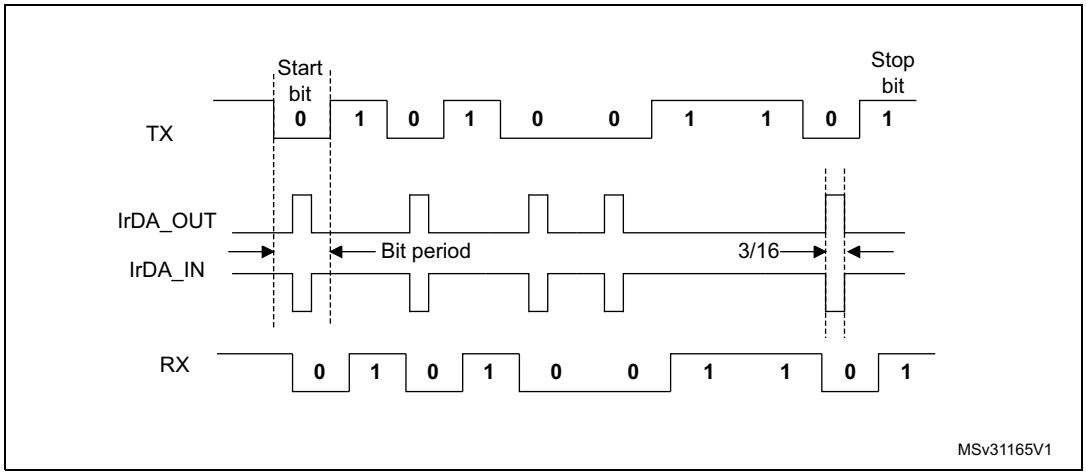

35.5.15 USART continuous communication in DMA mode

The USART is capable of performing continuous communication using the DMA. The DMA requests for Rx buffer and Tx buffer are generated independently.

Note: Please refer to Section 35.4: USART implementation on page 1035 to determine if the DMA mode is supported. If DMA is not supported, use the USART as explained in Section 35.5.2: USART transmitter or Section 35.5.3: USART receiver. To perform continuous communication, the user can clear the TXE/ RXNE flags In the USART_ISR register.

Transmission using DMA

DMA mode can be enabled for transmission by setting DMAT bit in the USART_CR3 register. Data is loaded from a SRAM area configured using the DMA peripheral (refer to *Section 11: Direct memory access controller (DMA) on page 281*) to the USART_TDR register whenever the TXE bit is set. To map a DMA channel for USART transmission, use the following procedure (x denotes the channel number):

1. Write the USART_TDR register address in the DMA control register to configure it as the destination of the transfer. The data is moved to this address from memory after each TXE event.
2. Write the memory address in the DMA control register to configure it as the source of the transfer. The data is loaded into the USART_TDR register from this memory area after each TXE event.
3. Configure the total number of bytes to be transferred to the DMA control register.
4. Configure the channel priority in the DMA register
5. Configure DMA interrupt generation after half/ full transfer as required by the application.
6. Clear the TC flag in the USART_ISR register by setting the TCCF bit in the USART_ICR register.
7. Activate the channel in the DMA register.

When the number of data transfers programmed in the DMA Controller is reached, the DMA controller generates an interrupt on the DMA channel interrupt vector.

In transmission mode, once the DMA has written all the data to be transmitted (the TCIF flag is set in the DMA_ISR register), the TC flag can be monitored to make sure that the USART

communication is complete. This is required to avoid corrupting the last transmission before disabling the USART or entering Stop mode. Software must wait until TC=1. The TC flag remains cleared during all data transfers and it is set by hardware at the end of transmission of the last frame.

Figure 376. Transmission using DMA

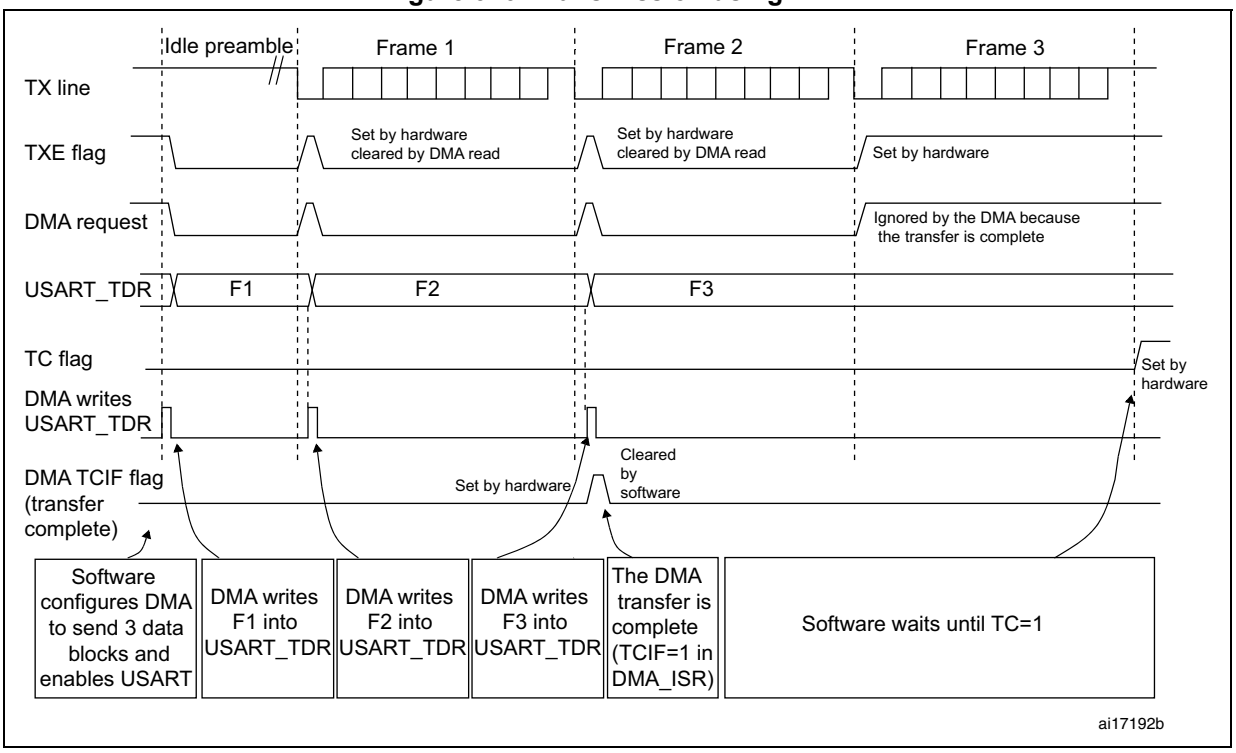

Reception using DMA

DMA mode can be enabled for reception by setting the DMAR bit in USART_CR3 register. Data is loaded from the USART_RDR register to a SRAM area configured using the DMA peripheral (refer to *Section 11: Direct memory access controller (DMA) on page 281*) whenever a data byte is received. To map a DMA channel for USART reception, use the following procedure:

1. Write the USART_RDR register address in the DMA control register to configure it as the source of the transfer. The data is moved from this address to the memory after each RXNE event.
2. Write the memory address in the DMA control register to configure it as the destination of the transfer. The data is loaded from USART_RDR to this memory area after each RXNE event.
3. Configure the total number of bytes to be transferred to the DMA control register.
4. Configure the channel priority in the DMA control register
5. Configure interrupt generation after half/ full transfer as required by the application.
6. Activate the channel in the DMA control register.

When the number of data transfers programmed in the DMA Controller is reached, the DMA controller generates an interrupt on the DMA channel interrupt vector.

Figure 377. Reception using DMA

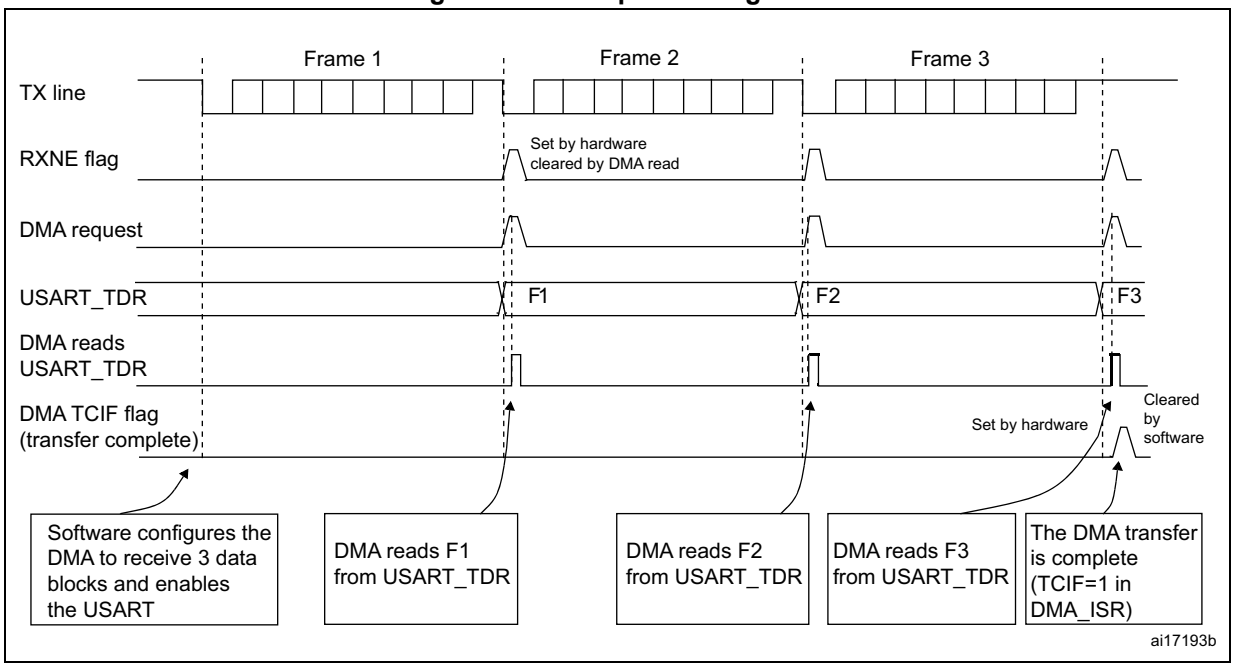

Error flagging and interrupt generation in multibuffer communication

In multibuffer communication if any error occurs during the transaction the error flag is asserted after the current byte. An interrupt is generated if the interrupt enable flag is set. For framing error, overrun error and noise flag which are asserted with RXNE in single byte reception, there is a separate error flag interrupt enable bit (EIE bit in the USART_CR3 register), which, if set, enables an interrupt after the current byte if any of these errors occur.

35.5.16 RS232 hardware flow control and RS485 driver enable using USART

It is possible to control the serial data flow between 2 devices by using the CTS input and the RTS output. The *Figure 378* shows how to connect 2 devices in this mode:

Figure 378. Hardware flow control between 2 USARTs

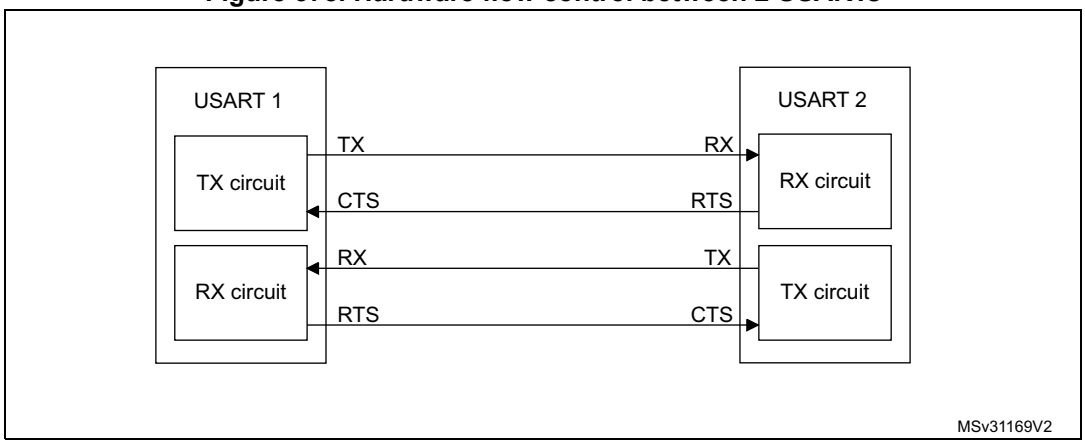

RS232 RTS and CTS flow control can be enabled independently by writing the RTSE and CTSE bits respectively to 1 (in the USART_CR3 register).

RS232 RTS flow control

If the RTS flow control is enabled (RTSE=1), then RTS is asserted (tied low) as long as the USART receiver is ready to receive a new data. When the receive register is full, RTS is de-asserted, indicating that the transmission is expected to stop at the end of the current frame. *Figure 379* shows an example of communication with RTS flow control enabled.

Figure 379. RS232 RTS flow control

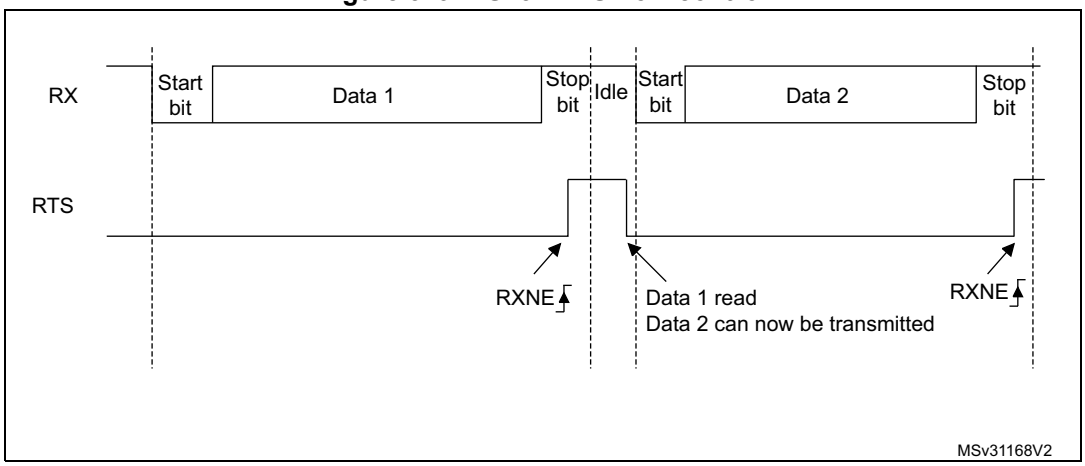

RS232 CTS flow control

If the CTS flow control is enabled (CTSE=1), then the transmitter checks the CTS input before transmitting the next frame. If CTS is asserted (tied low), then the next data is transmitted (assuming that data is to be transmitted, in other words, if TXE=0), else the transmission does not occur. when CTS is de-asserted during a transmission, the current transmission is completed before the transmitter stops.

When CTSE=1, the CTSIF status bit is automatically set by hardware as soon as the CTS input toggles. It indicates when the receiver becomes ready or not ready for communication. An interrupt is generated if the CTSIE bit in the USART_CR3 register is set. *Figure 380* shows an example of communication with CTS flow control enabled.

Figure 380. RS232 CTS flow control

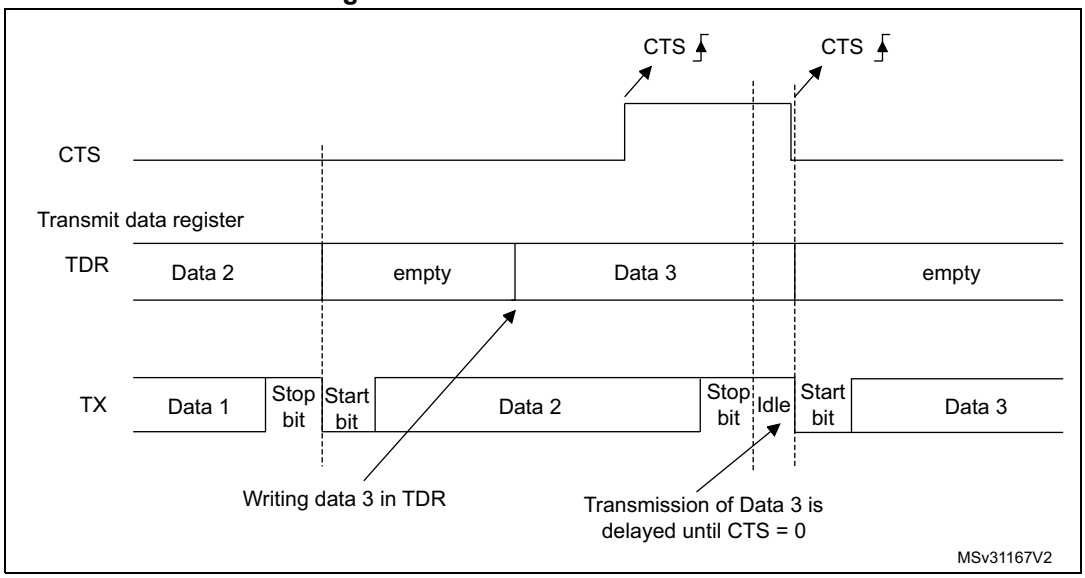

Note: For correct behavior, CTS must be asserted at least 3 USART clock source periods before the end of the current character. In addition it should be noted that the CTSCF flag may not be set for pulses shorter than 2 x PCLK periods.

RS485 Driver Enable

The driver enable feature is enabled by setting bit DEM in the USART_CR3 control register. This allows the user to activate the external transceiver control, through the DE (Driver Enable) signal. The assertion time is the time between the activation of the DE signal and the beginning of the START bit. It is programmed using the DEAT [4:0] bit fields in the USART_CR1 control register. The de-assertion time is the time between the end of the last stop bit, in a transmitted message, and the de-activation of the DE signal. It is programmed using the DEDT [4:0] bit fields in the USART_CR1 control register. The polarity of the DE signal can be configured using the DEP bit in the USART_CR3 control register.

In USART, the DEAT and DEDT are expressed in sample time units (1/8 or 1/16 bit duration, depending on the oversampling rate).

35.5.17 Wakeup from Stop mode using USART

The USART is able to wake up the MCU from Stop mode when the UESM bit is set and the USART clock is set to HSI16 or LSE (refer to Section Reset and clock control (RCC)).

- USART source clock is HSI

  If during stop mode the HSI clock is switched OFF, when a falling edge on the USART receive line is detected, the USART interface requests the HSI clock to be switched ON. The HSI clock is then used for the frame reception.

  – If the wakeup event is verified, the MCU wakes up from low-power mode and data reception goes on normally.

  – If the wakeup event is not verified, the HSI clock is switched OFF again, the MCU is not waken up and stays in low-power mode and the clock request is released.

- USART source clock is LSE

  Same principle as described in case of USART source clock is HSI with the difference that the LSE is ON in stop mode, but the LSE clock is not propagated to USART if the

USART is not requesting it. The LSE clock is not OFF but there is a clock gating to avoid useless consumption.

When the USART clock source is configured to be f_{LSE} or f_{HSI}, it is possible to keep enabled this clock during STOP mode by setting the UCESM bit in USART_CR3 control register.

The MCU wakeup from Stop mode can be done using the standard RXNE interrupt. In this case, the RXNEIE bit must be set before entering Stop mode.

Alternatively, a specific interrupt may be selected through the WUS bit fields.

In order to be able to wake up the MCU from Stop mode, the UESM bit in the USART_CR1 control register must be set prior to entering Stop mode.

When the wakeup event is detected, the WUF flag is set by hardware and a wakeup interrupt is generated if the WUFIE bit is set.

Note: Before entering Stop mode, the user must ensure that the USART is not performing a transfer. BUSY flag cannot ensure that Stop mode is never entered during a running reception.

The WUF flag is set when a wakeup event is detected, independently of whether the MCU is in Stop or in an active mode.

When entering Stop mode just after having initialized and enabled the receiver, the REACK bit must be checked to ensure the USART is actually enabled.

When DMA is used for reception, it must be disabled before entering Stop mode and re-enabled upon exit from Stop mode.

The wakeup from Stop mode feature is not available for all modes. For example it doesn't work in SPI mode because the SPI operates in master mode only.

Using Mute mode with Stop mode

If the USART is put into Mute mode before entering Stop mode:

- Wakeup from Mute mode on idle detection must not be used, because idle detection cannot work in Stop mode.
- If the wakeup from Mute mode on address match is used, then the source of wake-up from Stop mode must also be the address match. If the RXNE flag is set when entering the Stop mode, the interface will remain in mute mode upon address match and wake up from Stop.
- If the USART is configured to wake up the MCU from Stop mode on START bit detection, the WUF flag is set, but the RXNE flag is not set.

Determining the maximum USART baudrate allowing to wakeup correctly from Stop mode when the USART clock source is the HSI clock

The maximum baudrate allowing to wakeup correctly from stop mode depends on:

- the parameter $t_{WUUSART}$ provided in the device datasheet
- the USART receiver tolerance provided in the *Section 35.5.5: Tolerance of the USART receiver to clock deviation*.

Let us take this example: OVER8 = 0, M bits = 10, ONEBIT = 1, BRR [3:0] = 0000.

In these conditions, according to *Table 157: Tolerance of the USART receiver when BRR [3:0] = 0000*, the USART receiver tolerance is 4.86 %.

DTRA + DQUANT + DREC + DTCL + DWU < USART receiver's tolerance

DWU max = $t_{WUUSART}$ / (11 x Tbit Min)

Tbit Min = $t_{WUUSART}$ / (11 x DWU max)

If we consider an ideal case where the parameters DTRA, DQUANT, DREC and DTCL are at 0%, the DWU max is 4.86 %. In reality, we need to consider at least the HSI inaccuracy.

Let us consider the HSI inaccuracy = 1 %, $t_{WUUSART}$ = 1.7 µs (in case of wakeup from Stop mode 0).

DWU max = 4.86 % - 1 % = 3.86 %

Tbit min = 1.7 µs / (9 x 3.86 %) = 4.89 µs

In these conditions, the maximum baudrate allowing to wakeup correctly from Stop mode is 1/4.89 µs = 204 Kbaud.

35.6 USART low-power modes

Table 160. Effect of low-power modes on the USART

Mode	Description
Sleep	No effect. USART interrupt causes the device to exit Sleep mode.
Low-power run	No effect.
Low-power sleep	No effect. USART interrupt causes the device to exit Low-power sleep mode.
Stop 0 / Stop 1	The USART registers content is kept. The USART is able to wake up the MCU from Stop 0 and Stop 1 modes when the UESM bit is set and the USART clock is set to HSI16 or LSE. The MCU wakeup from Stop 0 and Stop 1 modes can be done using either a standard RXNE or a WUF interrupt.
Stop 2	The USART registers content is kept. The USART must either be disabled or put in reset state.
Standby	The USART is powered down and must be reinitialized when the device has exited from Standby or Shutdown mode.
Shutdown	

35.7 USART interrupts

Table 161. USART interrupt requests

Interrupt event	Event flag	Enable Control bit
Transmit data register empty	TXE	TXEIE
CTS interrupt	CTSIF	CTSIE
Transmission Complete	TC	TCIE
Receive data register not empty (data ready to be read)	RXNE	RXNEIE
Overrun error detected	ORE	
Idle line detected	IDLE	IDLEIE

Table 161. USART interrupt requests (continued)

Interrupt event	Event flag	Enable Control bit
Parity error	PE	PEIE
LIN break	LBDF	LBDIE
Noise Flag, Overrun error and Framing Error in multibuffer communication.	NF or ORE or FE	EIE
Character match	CMF	CMIE
Receiver timeout	RTOF	RTOIE
End of Block	EOBF	EOBIE
Wakeup from Stop mode	WUF(1)	WUFIE
Transmission complete before guard time	TCBGT	TCBGTIE

1. The WUF interrupt is active only in Stop mode.

The USART interrupt events are connected to the same interrupt vector (see *Figure 381*).

- During transmission: Transmission Complete, Transmission complete before guard time, Clear to Send, Transmit data Register empty or Framing error (in Smartcard mode) interrupt.
- During reception: Idle Line detection, Overrun error, Receive data register not empty, Parity error, LIN break detection, Noise Flag, Framing Error, Character match, etc.

These events generate an interrupt if the corresponding Enable Control Bit is set.

Figure 381. USART interrupt mapping diagram

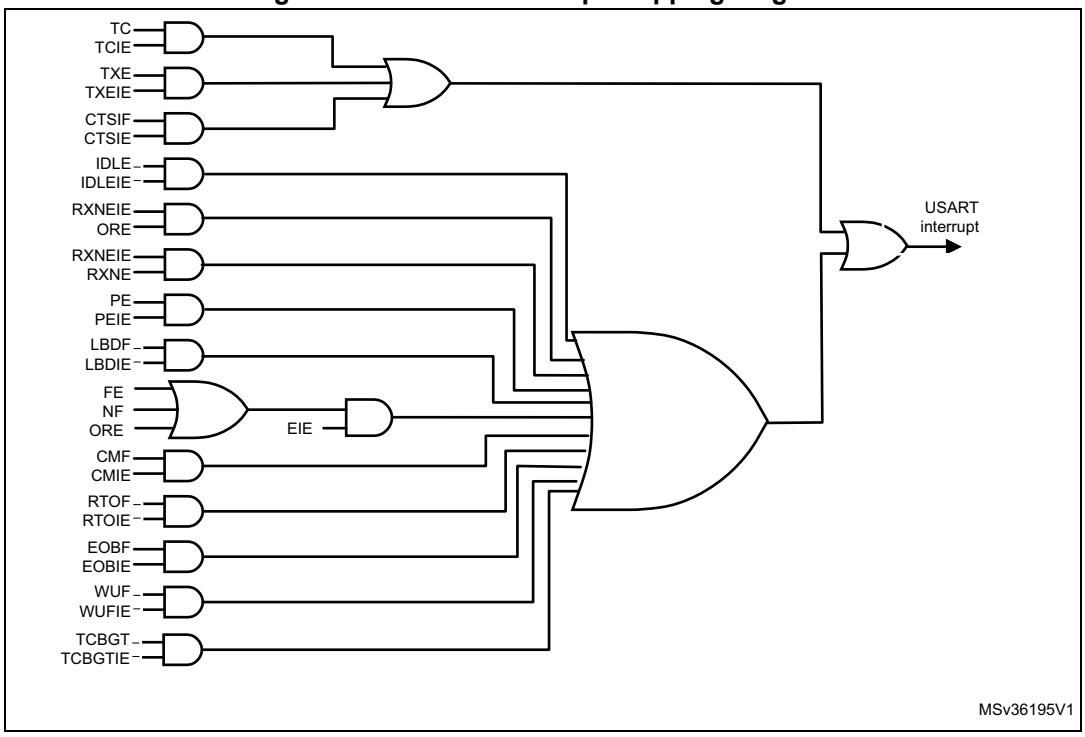

35.8 USART registers

Refer to *Section 1.1 on page 55* for a list of abbreviations used in register descriptions.

35.8.1 Control register 1 (USART_CR1)

Address offset: 0x00

Reset value: 0x0000

31	30	29	28	27	26	25	24	23	22	21	20	19	18	17	16
Res.	Res.	Res.	M1	EOBIE	RTOIE	DEAT[4:0]					DEDT[4:0]				
			rw	rw	rw	rw	rw	rw	rw	rw	rw	rw	rw	rw	rw
15	14	13	12	11	10	9	8	7	6	5	4	3	2	1	0
OVER8	CMIE	MME	M0	WAKE	PCE	PS	PEIE	TXEIE	TCIE	RXNEIE	IDLEIE	TE	RE	UESM	UE
rw	rw	rw	rw	rw	rw	rw	rw	rw	rw	rw	rw	rw	rw	rw	rw

Bits 31:29 Reserved, must be kept at reset value

Bit 28 **M1**: Word length

This bit, with bit 12 (M0), determines the word length. It is set or cleared by software.
M[1:0] = 00: 1 Start bit, 8 data bits, n stop bits
M[1:0] = 01: 1 Start bit, 9 data bits, n stop bits
M[1:0] = 10: 1 Start bit, 7 data bits, n stop bits
This bit can only be written when the USART is disabled (UE=0).

Note: In 7-bit data length mode, the Smartcard mode, LIN master mode and Autobaudrate (0x7F and 0x55 frames detection) are not supported.

Bit 27 **EOBIE**: End of Block interrupt enable

This bit is set and cleared by software.
0: Interrupt is inhibited
1: A USART interrupt is generated when the EOBF flag is set in the USART_ISR register

Note: If the USART does not support Smartcard mode, this bit is reserved and forced by hardware to '0'. Please refer to Section 35.4: USART implementation on page 1035.

Bit 26 **RTOIE**: Receiver timeout interrupt enable

This bit is set and cleared by software.
0: Interrupt is inhibited
1: An USART interrupt is generated when the RTOF bit is set in the USART_ISR register.

Note: If the USART does not support the Receiver timeout feature, this bit is reserved and forced by hardware to '0'. Section 35.4: USART implementation on page 1035.

Bits 25:21 **DEAT[4:0]**: Driver Enable assertion time

This 5-bit value defines the time between the activation of the DE (Driver Enable) signal and the beginning of the start bit. It is expressed in sample time units (1/8 or 1/16 bit duration, depending on the oversampling rate).
This bit field can only be written when the USART is disabled (UE=0).

Note: If the Driver Enable feature is not supported, this bit is reserved and must be kept cleared. Please refer to Section 35.4: USART implementation on page 1035.

Bits 20:16 **DEDT[4:0]**: Driver Enable de-assertion time

This 5-bit value defines the time between the end of the last stop bit, in a transmitted message, and the de-activation of the DE (Driver Enable) signal. It is expressed in sample time units (1/8 or 1/16 bit duration, depending on the oversampling rate).

If the USART_TDR register is written during the DEDT time, the new data is transmitted only when the DEDT and DEAT times have both elapsed.

This bit field can only be written when the USART is disabled (UE=0).

Note: If the Driver Enable feature is not supported, this bit is reserved and must be kept cleared. Please refer to Section 35.4: USART implementation on page 1035.

Bit 15 **OVER8**: Oversampling mode

0: Oversampling by 16

1: Oversampling by 8

This bit can only be written when the USART is disabled (UE=0).

Note: In LIN, IrDA and modes, this bit must be kept cleared.

Bit 14 **CMIE**: Character match interrupt enable

This bit is set and cleared by software.

0: Interrupt is inhibited

1: A USART interrupt is generated when the CMF bit is set in the USART_ISR register.

Bit 13 **MME**: Mute mode enable

This bit activates the mute mode function of the USART. when set, the USART can switch between the active and mute modes, as defined by the WAKE bit. It is set and cleared by software.

0: Receiver in active mode permanently

1: Receiver can switch between mute mode and active mode.

Bit 12 **M0**: Word length

This bit, with bit 28 (M1), determines the word length. It is set or cleared by software. See Bit 28 (M1) description.

This bit can only be written when the USART is disabled (UE=0).

Bit 11 **WAKE**: Receiver wakeup method

This bit determines the USART wakeup method from Mute mode. It is set or cleared by software.

0: Idle line

1: Address mark

This bit field can only be written when the USART is disabled (UE=0).

Bit 10 **PCE**: Parity control enable

This bit selects the hardware parity control (generation and detection). When the parity control is enabled, the computed parity is inserted at the MSB position (9th bit if M=1; 8th bit if M=0) and parity is checked on the received data. This bit is set and cleared by software. Once it is set, PCE is active after the current byte (in reception and in transmission).

0: Parity control disabled

1: Parity control enabled

This bit field can only be written when the USART is disabled (UE=0).

Bit 9 **PS**: Parity selection

This bit selects the odd or even parity when the parity generation/detection is enabled (PCE bit set). It is set and cleared by software. The parity will be selected after the current byte.

0: Even parity

1: Odd parity

This bit field can only be written when the USART is disabled (UE=0).

Bit 8 **PEIE**: PE interrupt enable

This bit is set and cleared by software.

0: Interrupt is inhibited

1: A USART interrupt is generated whenever PE=1 in the USART_ISR register

Bit 7 **TXEIE**: interrupt enable

This bit is set and cleared by software.

0: Interrupt is inhibited

1: A USART interrupt is generated whenever TXE=1 in the USART_ISR register

Bit 6 **TCIE**: Transmission complete interrupt enable

This bit is set and cleared by software.

0: Interrupt is inhibited

1: A USART interrupt is generated whenever TC=1 in the USART_ISR register

Bit 5 **RXNEIE**: RXNE interrupt enable

This bit is set and cleared by software.

0: Interrupt is inhibited

1: A USART interrupt is generated whenever ORE=1 or RXNE=1 in the USART_ISR register

Bit 4 **IDLEIE**: IDLE interrupt enable

This bit is set and cleared by software.

0: Interrupt is inhibited

1: A USART interrupt is generated whenever IDLE=1 in the USART_ISR register

Bit 3 **TE**: Transmitter enable

This bit enables the transmitter. It is set and cleared by software.

0: Transmitter is disabled

1: Transmitter is enabled

Note: During transmission, a "0" pulse on the TE bit ("0" followed by "1") sends a preamble (idle line) after the current word, except in Smartcard mode. In order to generate an idle character, the TE must not be immediately written to 1. In order to ensure the required duration, the software can poll the TEACK bit in the USART_ISR register.

In Smartcard mode, when TE is set there is a 1 bit-time delay before the transmission starts.

Bit 2 **RE**: Receiver enable

This bit enables the receiver. It is set and cleared by software.

0: Receiver is disabled

1: Receiver is enabled and begins searching for a start bit

Bit 1 **UESM**: USART enable in Stop mode

When this bit is cleared, the USART is not able to wake up the MCU from Stop mode.

When this bit is set, the USART is able to wake up the MCU from Stop mode, provided that the USART clock selection is HSI16 or LSE in the RCC.

This bit is set and cleared by software.

0: USART not able to wake up the MCU from Stop mode.

1: USART able to wake up the MCU from Stop mode. When this function is active, the clock source for the USART must be HSI16 or LSE (see Section Reset and clock control (RCC).

Note: It is recommended to set the UESM bit just before entering Stop mode and clear it on exit from Stop mode.

If the USART does not support the wakeup from Stop feature, this bit is reserved and forced by hardware to '0'. Please refer to Section 35.4: USART implementation on page 1035.

Bit 0 **UE**: USART enable

When this bit is cleared, the USART prescalers and outputs are stopped immediately, and current operations are discarded. The configuration of the USART is kept, but all the status flags, in the USART_ISR are set to their default values. This bit is set and cleared by software.

0: USART prescaler and outputs disabled, low-power mode

1: USART enabled

Note: In order to go into low-power mode without generating errors on the line, the TE bit must be reset before and the software must wait for the TC bit in the USART_ISR to be set before resetting the UE bit.

The DMA requests are also reset when UE = 0 so the DMA channel must be disabled before resetting the UE bit.

35.8.2 Control register 2 (USART_CR2)

Address offset: 0x04

Reset value: 0x0000

31	30	29	28	27	26	25	24	23	22	21	20	19	18	17	16
ADD[7:4]				ADD[3:0]				RTOEN	ABRMOD[1:0]		ABREN	MSBFIRST	DATAINV	TXINV	RXINV
rw	rw	rw	rw	rw	rw	rw	rw	rw	rw	rw	rw	rw	rw	rw	rw
15	14	13	12	11	10	9	8	7	6	5	4	3	2	1	0
SWAP	LINEN	STOP[1:0]		CLKEN	CPOL	CPHA	LBCL	Res.	LBDIE	LBDL	ADDM7	Res.	Res.	Res.	Res.
rw	rw	rw	rw	rw	rw	rw	rw		rw	rw	rw				

Bits 31:28 **ADD[7:4]**: Address of the USART node

This bit-field gives the address of the USART node or a character code to be recognized.

This is used in multiprocessor communication during Mute mode or Stop mode, for wakeup with 7-bit address mark detection. The MSB of the character sent by the transmitter should be equal to 1. It may also be used for character detection during normal reception, Mute mode inactive (for example, end of block detection in ModBus protocol). In this case, the whole received character (8-bit) is compared to the ADD[7:0] value and CMF flag is set on match.

This bit field can only be written when reception is disabled (RE = 0) or the USART is disabled (UE=0)

Bits 27:24 **ADD[3:0]**: Address of the USART node

This bit-field gives the address of the USART node or a character code to be recognized.

This is used in multiprocessor communication during Mute mode or Stop mode, for wakeup with address mark detection.

This bit field can only be written when reception is disabled (RE = 0) or the USART is disabled (UE=0)

Bit 23 **RTOEN**: Receiver timeout enable

This bit is set and cleared by software.

0: Receiver timeout feature disabled.

1: Receiver timeout feature enabled.

When this feature is enabled, the RTOF flag in the USART_ISR register is set if the RX line is idle (no reception) for the duration programmed in the RTOR (receiver timeout register).

Note: If the USART does not support the Receiver timeout feature, this bit is reserved and forced by hardware to '0'. Please refer to Section 35.4: USART implementation on page 1035.

Bits 22:21 **ABRMOD[1:0]**: Auto baud rate mode

These bits are set and cleared by software.

00: Measurement of the start bit is used to detect the baud rate.

01: Falling edge to falling edge measurement. (the received frame must start with a single bit = 1 -> Frame = Start10xxxxxx)

10: 0x7F frame detection.

11: 0x55 frame detection

This bit field can only be written when ABREN = 0 or the USART is disabled (UE=0).

Note: If DATAINV=1 and/or MSBFIRST=1 the patterns must be the same on the line, for example 0xAA for MSBFIRST)

If the USART does not support the auto baud rate feature, this bit is reserved and forced by hardware to '0'. Please refer to Section 35.4: USART implementation on page 1035.

Bit 20 **ABREN**: Auto baud rate enable

This bit is set and cleared by software.

0: Auto baud rate detection is disabled.

1: Auto baud rate detection is enabled.

Note: If the USART does not support the auto baud rate feature, this bit is reserved and forced by hardware to '0'. Please refer to Section 35.4: USART implementation on page 1035.

Bit 19 **MSBFIRST**: Most significant bit first

This bit is set and cleared by software.

0: data is transmitted/received with data bit 0 first, following the start bit.

1: data is transmitted/received with the MSB (bit 7/8/9) first, following the start bit.

This bit field can only be written when the USART is disabled (UE=0).

Bit 18 **DATAINV:** Binary data inversion

This bit is set and cleared by software.

0: Logical data from the data register are send/received in positive/direct logic. (1=H, 0=L)

1: Logical data from the data register are send/received in negative/inverse logic. (1=L, 0=H). The parity bit is also inverted.

This bit field can only be written when the USART is disabled (UE=0).

Bit 17 **TXINV:** TX pin active level inversion

This bit is set and cleared by software.

0: TX pin signal works using the standard logic levels (V_{DD} =1/idle, Gnd=0/mark)

1: TX pin signal values are inverted. (V_{DD} =0/mark, Gnd=1/idle).

This allows the use of an external inverter on the TX line.

This bit field can only be written when the USART is disabled (UE=0).

Bit 16 **RXINV:** RX pin active level inversion

This bit is set and cleared by software.

0: RX pin signal works using the standard logic levels (V_{DD} =1/idle, Gnd=0/mark)

1: RX pin signal values are inverted. (V_{DD} =0/mark, Gnd=1/idle).

This allows the use of an external inverter on the RX line.

This bit field can only be written when the USART is disabled (UE=0).

Bit 15 **SWAP:** Swap TX/RX pins

This bit is set and cleared by software.

0: TX/RX pins are used as defined in standard pinout

1: The TX and RX pins functions are swapped. This allows to work in the case of a cross-wired connection to another USART.

This bit field can only be written when the USART is disabled (UE=0).

Bit 14 **LINEN**: LIN mode enable

This bit is set and cleared by software.

0: LIN mode disabled

1: LIN mode enabled

The LIN mode enables the capability to send LIN Sync Breaks (13 low bits) using the SBKRQ bit in the USART_RQR register, and to detect LIN Sync breaks.

This bit field can only be written when the USART is disabled (UE=0).

Note: If the USART does not support LIN mode, this bit is reserved and forced by hardware to '0'. Please refer to Section 35.4: USART implementation on page 1035.

Bits 13:12 **STOP[1:0]**: STOP bits

These bits are used for programming the stop bits.

00: 1 stop bit

01: 0.5 stop bit

10: 2 stop bits

11: 1.5 stop bits

This bit field can only be written when the USART is disabled (UE=0).

Bit 11 **CLKEN**: Clock enable

This bit allows the user to enable the CK pin.

0: CK pin disabled

1: CK pin enabled

This bit can only be written when the USART is disabled (UE=0).

Note: If neither synchronous mode nor Smartcard mode is supported, this bit is reserved and forced by hardware to '0'. Please refer to Section 35.4: USART implementation on page 1035.

Note: In order to provide correctly the CK clock to the Smartcard, the steps below must be respected:
- UE = 0
- SCEN = 1
- GTPR configuration
- CLKEN= 1
- UE = 1

Bit 10 **CPOL**: Clock polarity

This bit allows the user to select the polarity of the clock output on the CK pin in synchronous mode. It works in conjunction with the CPHA bit to produce the desired clock/data relationship

0: Steady low value on CK pin outside transmission window

1: Steady high value on CK pin outside transmission window

This bit can only be written when the USART is disabled (UE=0).

Note: If synchronous mode is not supported, this bit is reserved and forced by hardware to '0'. Please refer to Section 35.4: USART implementation on page 1035.

Bit 9 **CPHA**: Clock phase

This bit is used to select the phase of the clock output on the CK pin in synchronous mode. It works in conjunction with the CPOL bit to produce the desired clock/data relationship (see *Figure 369* and *Figure 370*)

0: The first clock transition is the first data capture edge

1: The second clock transition is the first data capture edge

This bit can only be written when the USART is disabled (UE=0).

Note: If synchronous mode is not supported, this bit is reserved and forced by hardware to '0'. Please refer to Section 35.4: USART implementation on page 1035.

Bit 8 **LBCL**: Last bit clock pulse

This bit is used to select whether the clock pulse associated with the last data bit transmitted (MSB) has to be output on the CK pin in synchronous mode.

0: The clock pulse of the last data bit is not output to the CK pin

1: The clock pulse of the last data bit is output to the CK pin

Caution: The last bit is the 7th or 8th or 9th data bit transmitted depending on the 7 or 8 or 9 bit format selected by the M bits in the USART_CR1 register.

This bit can only be written when the USART is disabled (UE=0).

Note: If synchronous mode is not supported, this bit is reserved and forced by hardware to '0'. Please refer to Section 35.4: USART implementation on page 1035.

Bit 7 Reserved, must be kept at reset value.

Bit 6 **LBDIE**: LIN break detection interrupt enable

Break interrupt mask (break detection using break delimiter).

0: Interrupt is inhibited

1: An interrupt is generated whenever LBDF=1 in the USART_ISR register

Note: If LIN mode is not supported, this bit is reserved and forced by hardware to '0'. Please refer to Section 35.4: USART implementation on page 1035.

Bit 5 **LBDL**: LIN break detection length

This bit is for selection between 11 bit or 10 bit break detection.

0: 10-bit break detection

1: 11-bit break detection

This bit can only be written when the USART is disabled (UE=0).

Note: If LIN mode is not supported, this bit is reserved and forced by hardware to '0'. Please refer to Section 35.4: USART implementation on page 1035.

Bit 4 **ADDM7**:7-bit Address Detection/4-bit Address Detection

This bit is for selection between 4-bit address detection or 7-bit address detection.

0: 4-bit address detection

1: 7-bit address detection (in 8-bit data mode)

This bit can only be written when the USART is disabled (UE=0)

Note: In 7-bit and 9-bit data modes, the address detection is done on 6-bit and 8-bit address (ADD[5:0] and ADD[7:0]) respectively.

Bits 3:0 Reserved, must be kept at reset value.

Note: The 3 bits (CPOL, CPHA, LBCL) should not be written while the transmitter is enabled.

35.8.3 Control register 3 (USART_CR3)

Address offset: 0x08

Reset value: 0x0000

31	30	29	28	27	26	25	24	23	22	21	20	19	18	17	16
Res.	Res.	Res.	Res.	Res.	Res.	Res.	TCBGTIE	UCESM	WUFIE	WUS		SCARCNT2:0]			Res.
							rw		rw	rw	rw	rw	rw	rw	
15	14	13	12	11	10	9	8	7	6	5	4	3	2	1	0
DEP	DEM	DDRE	OVRDIS	ONEBIT	CTSIE	CTSE	RTSE	DMAT	DMAR	SCEN	NACK	HDSEL	IRLP	IREN	EIE
rw	rw	rw	rw	rw	rw	rw	rw	rw	rw	v	v	rw	rw	rw	rw

Bits 31:25 Reserved, must be kept at reset value.

Bit 24 **TCBGTIE**: Transmission complete before guard time interrupt enable

This bit is set and cleared by software.

0: Interrupt is inhibited

1: An USART interrupt is generated whenever TCBGT=1 in the USART_ISR register.

Note: If Smartcard mode is not supported, this bit is reserved and forced by hardware to '0' (see Section 35.4: USART implementation).

Bit 23 **UCESM**: USART Clock Enable in Stop mode.

This bit is set and cleared by software.

0: USART Clock is disabled in STOP mode.

1: USART Clock is enabled in STOP mode.

Bit 22 **WUFIE**: Wakeup from Stop mode interrupt enable

This bit is set and cleared by software.

0: Interrupt is inhibited

1: An USART interrupt is generated whenever WUF=1 in the USART_ISR register

Note: WUFIE must be set before entering in Stop mode.

The WUF interrupt is active only in Stop mode.

If the USART does not support the wakeup from Stop feature, this bit is reserved and forced by hardware to '0'.

Bits 21:20 **WUS[1:0]**: Wakeup from Stop mode interrupt flag selection

This bit-field specify the event which activates the WUF (wakeup from Stop mode flag).

00: WUF active on address match (as defined by ADD[7:0] and ADDM7)

01:Reserved.

10: WuF active on Start bit detection

11: WUF active on RXNE.

This bit field can only be written when the USART is disabled (UE=0).

Note: If the USART does not support the wakeup from Stop feature, this bit is reserved and forced by hardware to '0'.

Bits 19:17 **SCARCNT[2:0]**: Smartcard auto-retry count

This bit-field specifies the number of retries in transmit and receive, in Smartcard mode.

In transmission mode, it specifies the number of automatic retransmission retries, before generating a transmission error (FE bit set).

In reception mode, it specifies the number or erroneous reception trials, before generating a reception error (RXNE and PE bits set).

This bit field must be programmed only when the USART is disabled (UE=0).

When the USART is enabled (UE=1), this bit field may only be written to 0x0, in order to stop retransmission.

0x0: retransmission disabled - No automatic retransmission in transmit mode.

0x1 to 0x7: number of automatic retransmission attempts (before signaling error)

Note: If Smartcard mode is not supported, this bit is reserved and forced by hardware to '0'. Please refer to Section 35.4: USART implementation on page 1035.

Bit16 Reserved, must be kept at reset value.

Bit 15 **DEP**: Driver enable polarity selection

0: DE signal is active high.

1: DE signal is active low.

This bit can only be written when the USART is disabled (UE=0).

Note: If the Driver Enable feature is not supported, this bit is reserved and must be kept cleared. Please refer to Section 35.4: USART implementation on page 1035.

Bit 14 **DEM**: Driver enable mode

This bit allows the user to activate the external transceiver control, through the DE signal.

0: DE function is disabled.

1: DE function is enabled. The DE signal is output on the RTS pin.

This bit can only be written when the USART is disabled (UE=0).

Note: If the Driver Enable feature is not supported, this bit is reserved and must be kept cleared. Section 35.4: USART implementation on page 1035.

Bit 13 **DDRE**: DMA Disable on Reception Error

0: DMA is not disabled in case of reception error. The corresponding error flag is set but RXNE is kept 0 preventing from overrun. As a consequence, the DMA request is not asserted, so the erroneous data is not transferred (no DMA request), but next correct received data will be transferred (used for Smartcard mode).

1: DMA is disabled following a reception error. The corresponding error flag is set, as well as RXNE. The DMA request is masked until the error flag is cleared. This means that the software must first disable the DMA request (DMAR = 0) or clear RXNE before clearing the error flag.

This bit can only be written when the USART is disabled (UE=0).

Note: The reception errors are: parity error, framing error or noise error.

Bit 12 **OVRDIS**: Overrun Disable

This bit is used to disable the receive overrun detection.

0: Overrun Error Flag, ORE, is set when received data is not read before receiving new data.

1: Overrun functionality is disabled. If new data is received while the RXNE flag is still set the ORE flag is not set and the new received data overwrites the previous content of the USART_RDR register.

This bit can only be written when the USART is disabled (UE=0).

Note: This control bit allows checking the communication flow without reading the data.

Bit 11 **ONEBIT**: One sample bit method enable

This bit allows the user to select the sample method. When the one sample bit method is selected the noise detection flag (NF) is disabled.

0: Three sample bit method

1: One sample bit method

This bit can only be written when the USART is disabled (UE=0).

Note: ONEBIT feature applies only to data bits, It does not apply to Start bit.

Bit 10 **CTSIE**: CTS interrupt enable

0: Interrupt is inhibited

1: An interrupt is generated whenever CTSIF=1 in the USART_ISR register

Note: If the hardware flow control feature is not supported, this bit is reserved and forced by hardware to '0'. Please refer to Section 35.4: USART implementation on page 1035.

Bit 9 **CTSE**: CTS enable

0: CTS hardware flow control disabled

1: CTS mode enabled, data is only transmitted when the CTS input is asserted (tied to 0). If the CTS input is de-asserted while data is being transmitted, then the transmission is completed before stopping. If data is written into the data register while CTS is de-asserted, the transmission is postponed until CTS is asserted.

This bit can only be written when the USART is disabled (UE=0)

Note: If the hardware flow control feature is not supported, this bit is reserved and forced by hardware to '0'. Please refer to Section 35.4: USART implementation on page 1035.

Bit 8 **RTSE**: RTS enable

0: RTS hardware flow control disabled

1: RTS output enabled, data is only requested when there is space in the receive buffer. The transmission of data is expected to cease after the current character has been transmitted. The RTS output is asserted (pulled to 0) when data can be received.

This bit can only be written when the USART is disabled (UE=0).

Note: If the hardware flow control feature is not supported, this bit is reserved and forced by hardware to '0'. Please refer to Section 35.4: USART implementation on page 1035.

Bit 7 **DMAT**: DMA enable transmitter

This bit is set/reset by software
1: DMA mode is enabled for transmission
0: DMA mode is disabled for transmission

Bit 6 **DMAR**: DMA enable receiver

This bit is set/reset by software
1: DMA mode is enabled for reception
0: DMA mode is disabled for reception

Bit 5 **SCEN**: Smartcard mode enable

This bit is used for enabling Smartcard mode.
0: Smartcard Mode disabled
1: Smartcard Mode enabled
This bit field can only be written when the USART is disabled (UE=0).

Note: If the USART does not support Smartcard mode, this bit is reserved and forced by hardware to '0'. Please refer to Section 35.4: USART implementation on page 1035.

Bit 4 **NACK**: Smartcard NACK enable

0: NACK transmission in case of parity error is disabled
1: NACK transmission during parity error is enabled
This bit field can only be written when the USART is disabled (UE=0).

Note: If the USART does not support Smartcard mode, this bit is reserved and forced by hardware to '0'. Please refer to Section 35.4: USART implementation on page 1035.

Bit 3 **HDSEL**: Half-duplex selection

Selection of Single-wire Half-duplex mode
0: Half duplex mode is not selected
1: Half duplex mode is selected
This bit can only be written when the USART is disabled (UE=0).

Bit 2 **IRLP**: IrDA low-power

This bit is used for selecting between normal and low-power IrDA modes
0: Normal mode
1: Low-power mode
This bit can only be written when the USART is disabled (UE=0).

Note: If IrDA mode is not supported, this bit is reserved and forced by hardware to '0'. Please refer to Section 35.4: USART implementation on page 1035.

Bit 1 **IREN**: IrDA mode enable

This bit is set and cleared by software.
0: IrDA disabled
1: IrDA enabled
This bit can only be written when the USART is disabled (UE=0).

Note: If IrDA mode is not supported, this bit is reserved and forced by hardware to '0'. Please refer to Section 35.4: USART implementation on page 1035.

Bit 0 **EIE**: Error interrupt enable

Error Interrupt Enable Bit is required to enable interrupt generation in case of a framing error, overrun error or noise flag (FE=1 or ORE=1 or NF=1 in the USART_ISR register).
0: Interrupt is inhibited
1: An interrupt is generated when FE=1 or ORE=1 or NF=1 in the USART_ISR register.

35.8.4 Baud rate register (USART_BRR)

This register can only be written when the USART is disabled (UE=0). It may be automatically updated by hardware in auto baud rate detection mode.

Address offset: 0x0C

Reset value: 0x0000

31	30	29	28	27	26	25	24	23	22	21	20	19	18	17	16
Res.	Res.	Res.	Res.	Res.	Res.	Res.	Res.	Res.	Res.	Res.	Res.	Res.	Res.	Res.	Res.

15	14	13	12	11	10	9	8	7	6	5	4	3	2	1	0
BRR[15:0]															
rw	rw	rw	rw	rw	rw	rw	rw	rw	rw	rw	rw	rw	rw	rw	rw

Bits 31:16 Reserved, must be kept at reset value.

Bits 15:4 **BRR[15:4]**

BRR[15:4] = USARTDIV[15:4]

Bits 3:0 **BRR[3:0]**

When OVER8 = 0, BRR[3:0] = USARTDIV[3:0].
When OVER8 = 1:
BRR[2:0] = USARTDIV[3:0] shifted 1 bit to the right.
BRR[3] must be kept cleared.

35.8.5 Guard time and prescaler register (USART_GTPR)

Address offset: 0x10

Reset value: 0x0000

31	30	29	28	27	26	25	24	23	22	21	20	19	18	17	16
Res.	Res.	Res.	Res.	Res.	Res.	Res.	Res.	Res.	Res.	Res.	Res.	Res.	Res.	Res.	Res.

15	14	13	12	11	10	9	8	7	6	5	4	3	2	1	0
GT[7:0]								PSC[7:0]							
rw								rw							

Bits 31:16 Reserved, must be kept at reset value

Bits 15:8 **GT[7:0]**: Guard time value

This bit-field is used to program the Guard time value in terms of number of baud clock periods.

This is used in Smartcard mode. The Transmission Complete flag is set after this guard time value.

This bit field can only be written when the USART is disabled (UE=0).

Note: If Smartcard mode is not supported, this bit is reserved and forced by hardware to '0'. Please refer to Section 35.4: USART implementation on page 1035.

Bits 7:0 **PSC[7:0]**: Prescaler value

In IrDA Low-power and normal IrDA mode:

PSC[7:0] = IrDA Normal and Low-Power Baud Rate

Used for programming the prescaler for dividing the USART source clock to achieve the low-power frequency:

The source clock is divided by the value given in the register (8 significant bits):

00000000: Reserved - do not program this value

00000001: divides the source clock by 1

00000010: divides the source clock by 2

...

In Smartcard mode:

PSC[4:0]: Prescaler value

Used for programming the prescaler for dividing the USART source clock to provide the Smartcard clock.

The value given in the register (5 significant bits) is multiplied by 2 to give the division factor of the source clock frequency:

00000: Reserved - do not program this value

00001: divides the source clock by 2

00010: divides the source clock by 4

00011: divides the source clock by 6

...

This bit field can only be written when the USART is disabled (UE=0).

Note: Bits [7:5] must be kept cleared if Smartcard mode is used.

This bit field is reserved and forced by hardware to '0' when the Smartcard and IrDA modes are not supported. Please refer to Section 35.4: USART implementation on page 1035.

35.8.6 Receiver timeout register (USART_RTOR)

Address offset: 0x14

Reset value: 0x0000

31	30	29	28	27	26	25	24	23	22	21	20	19	18	17	16
BLEN[7:0]								RTO[23:16]							
rw	rw	rw	rw	rw	rw	rw	rw	rw	rw	rw	rw	rw	rw	rw	rw
15	14	13	12	11	10	9	8	7	6	5	4	3	2	1	0
RTO[15:0]															
rw	rw	rw	rw	rw	rw	rw	rw	rw	rw	rw	rw	rw	rw	rw	rw

Bits 31:24 **BLEN[7:0]**: Block Length

This bit-field gives the Block length in Smartcard T=1 Reception. Its value equals the number of information characters + the length of the Epilogue Field (1-LEC/2-CRC) - 1.

Examples:

BLEN = 0 -> 0 information characters + LEC

BLEN = 1 -> 0 information characters + CRC

BLEN = 255 -> 254 information characters + CRC (total 256 characters))

In Smartcard mode, the Block length counter is reset when TXE=0.

This bit-field can be used also in other modes. In this case, the Block length counter is reset when RE=0 (receiver disabled) and/or when the EOBCF bit is written to 1.

Note: This value can be programmed after the start of the block reception (using the data from the LEN character in the Prologue Field). It must be programmed only once per received block.

Bits 23:0 **RTO[23:0]**: Receiver timeout value

This bit-field gives the Receiver timeout value in terms of number of bit duration.

In standard mode, the RTOF flag is set if, after the last received character, no new start bit is detected for more than the RTO value.

In Smartcard mode, this value is used to implement the CWT and BWT. See Smartcard section for more details.

In this case, the timeout measurement is done starting from the Start Bit of the last received character.

Note: This value must only be programmed once per received character.

Note: RTOR can be written on the fly. If the new value is lower than or equal to the counter, the RTOF flag is set.

This register is reserved and forced by hardware to "0x00000000" when the Receiver timeout feature is not supported. Please refer to Section 35.4: USART implementation on page 1035.

35.8.7 Request register (USART_RQR)

Address offset: 0x18

Reset value: 0x0000

31	30	29	28	27	26	25	24	23	22	21	20	19	18	17	16
Res.	Res.	Res.	Res.	Res.	Res.	Res.	Res.	Res.	Res.	Res.	Res.	Res.	Res.	Res.	Res.

15	14	13	12	11	10	9	8	7	6	5	4	3	2	1	0
Res.	Res.	Res.	Res.	Res.	Res.	Res.	Res.	Res.	Res.	Res.	TXFRQ	RXFRQ	MMRQ	SBKRQ	ABRRQ
											w	w	w	w	w

Bits 31:5 Reserved, must be kept at reset value

Bit 4 **TXFRQ**: Transmit data flush request

Writing 1 to this bit sets the TXE flag.

This allows to discard the transmit data. This bit must be used only in Smartcard mode, when data has not been sent due to errors (NACK) and the FE flag is active in the USART_ISR register.

If the USART does not support Smartcard mode, this bit is reserved and forced by hardware to '0'. Please refer to *Section 35.4: USART implementation on page 1035*.

Bit 3 **RXFRQ**: Receive data flush request

Writing 1 to this bit clears the RXNE flag.

This allows to discard the received data without reading it, and avoid an overrun condition.

Bit 2 **MMRQ**: Mute mode request

Writing 1 to this bit puts the USART in mute mode and sets the RWU flag.

Bit 1 **SBKRQ**: Send break request

Writing 1 to this bit sets the SBKF flag and request to send a BREAK on the line, as soon as the transmit machine is available.

Note: In the case the application needs to send the break character following all previously inserted data, including the ones not yet transmitted, the software should wait for the TXE flag assertion before setting the SBKRQ bit.

Bit 0 **ABRRQ**: Auto baud rate request

Writing 1 to this bit resets the ABRF flag in the USART_ISR and request an automatic baud rate measurement on the next received data frame.

Note: If the USART does not support the auto baud rate feature, this bit is reserved and forced by hardware to '0'. Please refer to Section 35.4: USART implementation on page 1035.

35.8.8 Interrupt and status register (USART_ISR)

Address offset: 0x1C

Reset value: 0x0200 00C0

31	30	29	28	27	26	25	24	23	22	21	20	19	18	17	16
Res.	Res.	Res.	Res.	Res.	Res.	TCBGT	Res.	Res.	REACK	TEACK	WUF	RWU	SBKF	CMF	BUSY
						r			r	r	r	r	r	r	r

15	14	13	12	11	10	9	8	7	6	5	4	3	2	1	0
ABRF	ABRE	Res.	EOBF	RTOF	CTS	CTSIF	LBDF	TXE	TC	RXNE	IDLE	ORE	NF	FE	PE
r	r		r	r	r	r	r	r	r	r	r	r	r	r	r

Bits 31:26 Reserved, must be kept at reset value.

Bit 25 **TCBGT**: Transmission complete before guard time completion.

This bit is used in Smartcard mode. It is set by hardware if the transmission of a frame containing data has completed successfully (no NACK received from the card) and before the guard time has elapsed (contrary to the TC flag which is set when the guard time has elapsed).

An interrupt is generated if TCBGTIE=1 in USART_CR3 register. It is cleared by software, by writing 1 to TCBGTCF in USART_ICR or by writing to the USART_TDR register.

0: Transmission not complete or transmission completed with error (i.e. NACK received from the card)

1: Transmission complete (before Guard time has elapsed and no NACK received from the smartcard).

Note: If the USART does not support the Smartcard mode, this bit is reserved and forced by hardware to '0'. If the USART supports the Smartcard mode and the Smartcard mode is enabled, the TCBGT reset value is 1.

Bits 24:23 Reserved, must be kept at reset value.

Bit 22 **REACK**: Receive enable acknowledge flag

This bit is set/reset by hardware, when the Receive Enable value is taken into account by the USART.

When the wakeup from Stop mode is supported, the REACK flag can be used to verify that the USART is ready for reception before entering Stop mode.

Bit 21 **TEACK**: Transmit enable acknowledge flag

This bit is set/reset by hardware, when the Transmit Enable value is taken into account by the USART.

It can be used when an idle frame request is generated by writing TE=0, followed by TE=1 in the USART_CR1 register, in order to respect the TE=0 minimum period.

Bit 20 **WUF**: Wakeup from Stop mode flag

This bit is set by hardware, when a wakeup event is detected. The event is defined by the WUS bit field. It is cleared by software, writing a 1 to the WUCF in the USART_ICR register.

An interrupt is generated if WUFIE=1 in the USART_CR3 register.

Note: When UESM is cleared, WUF flag is also cleared.

The WUF interrupt is active only in Stop mode.

If the USART does not support the wakeup from Stop feature, this bit is reserved and forced by hardware to '0'.

Bit 19 **RWU**: *Receiver wakeup from Mute mode*

This bit indicates if the USART is in mute mode. It is cleared/set by hardware when a wakeup/mute sequence is recognized. The mute mode control sequence (address or IDLE) is selected by the WAKE bit in the USART_CR1 register.

When wakeup on IDLE mode is selected, this bit can only be set by software, writing 1 to the MMRQ bit in the USART_RQR register.

0: Receiver in active mode

1: Receiver in mute mode

Bit 18 **SBKF**: Send break flag

This bit indicates that a send break character was requested. It is set by software, by writing 1 to the SBKRQ bit in the USART_RQR register. It is automatically reset by hardware during the stop bit of break transmission.

0: No break character is transmitted

1: Break character will be transmitted

Bit 17 **CMF**: Character match flag

This bit is set by hardware, when the character defined by ADD[7:0] is received. It is cleared by software, writing 1 to the CMCF in the USART_ICR register.

An interrupt is generated if CMIE=1in the USART_CR1 register.

0: No Character match detected

1: Character Match detected

Bit 16 **BUSY**: Busy flag

This bit is set and reset by hardware. It is active when a communication is ongoing on the RX line (successful start bit detected). It is reset at the end of the reception (successful or not).

0: USART is idle (no reception)

1: Reception on going

Bit 15 **ABRF:** Auto baud rate flag

This bit is set by hardware when the automatic baud rate has been set (RXNE will also be set, generating an interrupt if RXNEIE = 1) or when the auto baud rate operation was completed without success (ABRE=1) (ABRE, RXNE and FE are also set in this case)

It is cleared by software, in order to request a new auto baud rate detection, by writing 1 to the ABRRQ in the USART_RQR register.

Note: If the USART does not support the auto baud rate feature, this bit is reserved and forced by hardware to '0'.

Bit 14 **ABRE**: Auto baud rate error

This bit is set by hardware if the baud rate measurement failed (baud rate out of range or character comparison failed)

It is cleared by software, by writing 1 to the ABRRQ bit in the USART_CR3 register.

Note: If the USART does not support the auto baud rate feature, this bit is reserved and forced by hardware to '0'.

Bit 13 Reserved, must be kept at reset value.

Bit 12 **EOBF**: End of block flag

This bit is set by hardware when a complete block has been received (for example T=1 Smartcard mode). The detection is done when the number of received bytes (from the start of the block, including the prologue) is equal or greater than BLEN + 4.

An interrupt is generated if the EOBIE=1 in the USART_CR2 register.

It is cleared by software, writing 1 to the EOBCF in the USART_ICR register.

0: End of Block not reached

1: End of Block (number of characters) reached

Note: If Smartcard mode is not supported, this bit is reserved and forced by hardware to '0'. Please refer to Section 35.4: USART implementation on page 1035.

Bit 11 **RTOF**: Receiver timeout

This bit is set by hardware when the timeout value, programmed in the RTOR register has lapsed, without any communication. It is cleared by software, writing 1 to the RTOCF bit in the USART_ICR register.

An interrupt is generated if RTOIE=1 in the USART_CR1 register.

In Smartcard mode, the timeout corresponds to the CWT or BWT timings.

0: Timeout value not reached

1: Timeout value reached without any data reception

Note: If a time equal to the value programmed in RTOR register separates 2 characters, RTOF is not set. If this time exceeds this value + 2 sample times (2/16 or 2/8, depending on the oversampling method), RTOF flag is set.

The counter counts even if RE = 0 but RTOF is set only when RE = 1. If the timeout has already elapsed when RE is set, then RTOF will be set.

If the USART does not support the Receiver timeout feature, this bit is reserved and forced by hardware to '0'.

Bit 10 **CTS**: CTS flag

This bit is set/reset by hardware. It is an inverted copy of the status of the CTS input pin.

0: CTS line set

1: CTS line reset

Note: If the hardware flow control feature is not supported, this bit is reserved and forced by hardware to '0'.

Bit 9 **CTSIF**: CTS interrupt flag

This bit is set by hardware when the CTS input toggles, if the CTSE bit is set. It is cleared by software, by writing 1 to the CTSCF bit in the USART_ICR register.

An interrupt is generated if CTSIE=1 in the USART_CR3 register.

0: No change occurred on the CTS status line

1: A change occurred on the CTS status line

Note: If the hardware flow control feature is not supported, this bit is reserved and forced by hardware to '0'.

Bit 8 **LBDF**: LIN break detection flag

This bit is set by hardware when the LIN break is detected. It is cleared by software, by writing 1 to the LBDCF in the USART_ICR.

An interrupt is generated if LBDIE = 1 in the USART_CR2 register.

0: LIN Break not detected

1: LIN break detected

Note: If the USART does not support LIN mode, this bit is reserved and forced by hardware to '0'. Please refer to Section 35.4: USART implementation on page 1035.

Bit 7 **TXE**: Transmit data register empty

This bit is set by hardware when the content of the USART_TDR register has been transferred into the shift register. It is cleared by a write to the USART_TDR register.

The TXE flag can also be cleared by writing 1 to the TXFRQ in the USART_RQR register, in order to discard the data (only in Smartcard T=0 mode, in case of transmission failure).

An interrupt is generated if the TXEIE bit =1 in the USART_CR1 register.

0: data is not transferred to the shift register

1: data is transferred to the shift register)

Note: This bit is used during single buffer transmission.

Bit 6 **TC**: Transmission complete

This bit is set by hardware if the transmission of a frame containing data is complete and if TXE is set. An interrupt is generated if TCIE=1 in the USART_CR1 register. It is cleared by software, writing 1 to the TCCF in the USART_ICR register or by a write to the USART_TDR register.

An interrupt is generated if TCIE=1 in the USART_CR1 register.

0: Transmission is not complete

1: Transmission is complete

Note: If TE bit is reset and no transmission is on going, the TC bit will be set immediately.

Bit 5 **RXNE**: Read data register not empty

This bit is set by hardware when the content of the RDR shift register has been transferred to the USART_RDR register. It is cleared by a read to the USART_RDR register. The RXNE flag can also be cleared by writing 1 to the RXFRQ in the USART_RQR register.

An interrupt is generated if RXNEIE=1 in the USART_CR1 register.

0: data is not received

1: Received data is ready to be read.

Bit 4 **IDLE**: Idle line detected

This bit is set by hardware when an Idle Line is detected. An interrupt is generated if IDLEIE=1 in the USART_CR1 register. It is cleared by software, writing 1 to the IDLECF in the USART_ICR register.

0: No Idle line is detected

1: Idle line is detected

Note: The IDLE bit will not be set again until the RXNE bit has been set (i.e. a new idle line occurs).

If mute mode is enabled (MME=1), IDLE is set if the USART is not mute (RWU=0), whatever the mute mode selected by the WAKE bit. If RWU=1, IDLE is not set.

Bit 3 **ORE**: Overrun error

This bit is set by hardware when the data currently being received in the shift register is ready to be transferred into the RDR register while RXNE=1. It is cleared by a software, writing 1 to the ORECF, in the USART_ICR register.

An interrupt is generated if RXNEIE=1 or EIE = 1 in the USART_CR1 register.

0: No overrun error

1: Overrun error is detected

Note: When this bit is set, the RDR register content is not lost but the shift register is overwritten. An interrupt is generated if the ORE flag is set during multibuffer communication if the EIE bit is set.

This bit is permanently forced to 0 (no overrun detection) when the OVRDIS bit is set in the USART_CR3 register.

Bit 2 **NF**: START bit Noise detection flag

This bit is set by hardware when noise is detected on a received frame. It is cleared by software, writing 1 to the NFCF bit in the USART_ICR register.

0: No noise is detected

1: Noise is detected

Note: This bit does not generate an interrupt as it appears at the same time as the RXNE bit which itself generates an interrupt. An interrupt is generated when the NF flag is set during multibuffer communication if the EIE bit is set.

Note: When the line is noise-free, the NF flag can be disabled by programming the ONEBIT bit to 1 to increase the USART tolerance to deviations (Refer to Section 35.5.5: Tolerance of the USART receiver to clock deviation on page 1051).

Bit 1 **FE**: Framing error

This bit is set by hardware when a de-synchronization, excessive noise or a break character is detected. It is cleared by software, writing 1 to the FECF bit in the USART_ICR register.

In Smartcard mode, in transmission, this bit is set when the maximum number of transmit attempts is reached without success (the card NACKs the data frame).

An interrupt is generated if EIE = 1 in the USART_CR1 register.

0: No Framing error is detected

1: Framing error or break character is detected

Bit 0 **PE**: Parity error

This bit is set by hardware when a parity error occurs in receiver mode. It is cleared by software, writing 1 to the PECF in the USART_ICR register.

An interrupt is generated if PEIE = 1 in the USART_CR1 register.

0: No parity error

1: Parity error

35.8.9 Interrupt flag clear register (USART_ICR)

Address offset: 0x20

Reset value: 0x0000

31	30	29	28	27	26	25	24	23	22	21	20	19	18	17	16
Res.	Res.	Res.	Res.	Res.	Res.	Res.	Res.	Res.	Res.	Res.	WUCF	Res.	Res.	CMCF	Res.
											rc_w1			rc_w1	

15	14	13	12	11	10	9	8	7	6	5	4	3	2	1	0
Res.	Res.	Res.	EOBCF	RTOCF	Res.	CTSCF	LBDCF	TCBGTCF	TCCF	Res.	IDLECF	ORECF	NCF	FECF	PECF
			rc_w1	rc_w1		rc_w1	rc_w1	rc_w1	rc_w1		rc_w1	rc_w1	rc_w1	rc_w1	rc_w1

Bits 31:21 Reserved, must be kept at reset value.

Bit 20 **WUCF**: Wakeup from Stop mode clear flag

Writing 1 to this bit clears the WUF flag in the USART_ISR register.

Note: If the USART does not support the wakeup from Stop feature, this bit is reserved and forced by hardware to '0'.

Bits 19:18 Reserved, must be kept at reset value.

Bit 17 **CMCF**: Character match clear flag

Writing 1 to this bit clears the CMF flag in the USART_ISR register.

Bits 16:13 Reserved, must be kept at reset value.

Bit 12 **EOBCF**: End of block clear flag

Writing 1 to this bit clears the EOBF flag in the USART_ISR register.

Note: If the USART does not support Smartcard mode, this bit is reserved and forced by hardware to '0'. Please refer to Section 35.4: USART implementation on page 1035.

Bit 11 **RTOCF**: Receiver timeout clear flag

Writing 1 to this bit clears the RTOF flag in the USART_ISR register.

Note: If the USART does not support the Receiver timeout feature, this bit is reserved and forced by hardware to '0'. Please refer to Section 35.4: USART implementation on page 1035.

Bit 10 Reserved, must be kept at reset value.

Bit 9 **CTSCF**: CTS clear flag

Writing 1 to this bit clears the CTSIF flag in the USART_ISR register.

Note: If the hardware flow control feature is not supported, this bit is reserved and forced by hardware to '0'. Please refer to Section 35.4: USART implementation on page 1035.

Bit 8 **LBDCF**: LIN break detection clear flag

Writing 1 to this bit clears the LBDF flag in the USART_ISR register.

Note: If LIN mode is not supported, this bit is reserved and forced by hardware to '0'. Please refer to Section 35.4: USART implementation on page 1035.

Bit 7 **TCBGTCF**: Transmission completed before guard time clear flag

Writing 1 to this bit clears the TCBGT flag in the USART_ISR register.

Note: If the USART does not support SmartCard mode, this bit is reserved and forced by hardware to 0. Please refer to Section 35.4: USART implementation on page 1035).

Bit 6 **TCCF**: Transmission complete clear flag

Writing 1 to this bit clears the TC flag in the USART_ISR register.

Bit 5 Reserved, must be kept at reset value.

Bit 4 **IDLECF**: Idle line detected clear flag

Writing 1 to this bit clears the IDLE flag in the USART_ISR register.

Bit 3 **ORECF**: Overrun error clear flag

Writing 1 to this bit clears the ORE flag in the USART_ISR register.

Bit 2 **NCF**: Noise detected clear flag

Writing 1 to this bit clears the NF flag in the USART_ISR register.

Bit 1 **FECF**: Framing error clear flag

Writing 1 to this bit clears the FE flag in the USART_ISR register.

Bit 0 **PECF**: Parity error clear flag

Writing 1 to this bit clears the PE flag in the USART_ISR register.

35.8.10 Receive data register (USART_RDR)

Address offset: 0x24

Reset value: Undefined

31	30	29	28	27	26	25	24	23	22	21	20	19	18	17	16
Res.	Res.	Res.	Res.	Res.	Res.	Res.	Res.	Res.	Res.	Res.	Res.	Res.	Res.	Res.	Res.

15	14	13	12	11	10	9	8	7	6	5	4	3	2	1	0
Res.	Res.	Res.	Res.	Res.	Res.	Res.	RDR[8:0]								
							r	r	r	r	r	r	r	r	r

Bits 31:9 Reserved, must be kept at reset value.

Bits 8:0 **RDR[8:0]**: Receive data value

Contains the received data character.

The RDR register provides the parallel interface between the input shift register and the internal bus (see *Figure 357*).

When receiving with the parity enabled, the value read in the MSB bit is the received parity bit.

35.8.11 Transmit data register (USART_TDR)

Address offset: 0x28

Reset value: Undefined

31	30	29	28	27	26	25	24	23	22	21	20	19	18	17	16
Res.	Res.	Res.	Res.	Res.	Res.	Res.	Res.	Res.	Res.	Res.	Res.	Res.	Res.	Res.	Res.

15	14	13	12	11	10	9	8	7	6	5	4	3	2	1	0
Res.	Res.	Res.	Res.	Res.	Res.	Res.	TDR[8:0]								
							rw	rw	rw	rw	rw	rw	rw	rw	rw

Bits 31:9 Reserved, must be kept at reset value.

Bits 8:0 **TDR[8:0]**: Transmit data value

Contains the data character to be transmitted.

The TDR register provides the parallel interface between the internal bus and the output shift register (see *Figure 357*).

When transmitting with the parity enabled (PCE bit set to 1 in the USART_CR1 register), the value written in the MSB (bit 7 or bit 8 depending on the data length) has no effect because it is replaced by the parity.

Note: This register must be written only when TXE=1.

35.8.12 USART register map

The table below gives the USART register map and reset values.

Table 162. USART register map and reset values

Offset	Register	31	30	29	28	27	26	25	24	23	22	21	20	19	18	17	16	15	14	13	12	11	10	9	8	7	6	5	4	3	2	1	0
0x00	USART_CR1	Res.	Res.	Res.	M1	EOBIE	RTOIE	DEAT4	DEAT3	DEAT2	DEAT1	DEAT0	DEDT4	DEDT3	DEDT2	DEDT1	DEDT0	OVER8	CMIE	MME	M0	WAKE	PCE	PS	PEIE	TXEIE	TCIE	RXNEIE	IDLEIE	TE	RE	UESM	UE
	Reset value				0	0	0	0	0	0	0	0	0	0	0	0	0	0	0	0	0	0	0	0	0	0	0	0	0	0	0	0	0
0x04	USART_CR2	ADD[7:4]				ADD[3:0]				RTOEN	ABRMOD1	ABRMOD0	ABREN	MSBFIRST	DATAINV	TXINV	RXINV	SWAP	LINEN	STOP [1:0]		CLKEN	CPOL	CPHA	LBCL	Res.	LBDIE	LBDL	ADDM7	Res.	Res.	Res.	Res.
	Reset value	0	0	0	0	0	0	0	0	0	0	0	0	0	0	0	0	0	0	0	0	0	0	0	0		0	0	0				
0x08	USART_CR3	Res.	Res.	Res.	Res.	Res.	Res.	Res.	TCBGTIE	UCESM	WUFIE	WUS		SCARCNT2:0]			Res.	DEP	DEM	DDRE	OVRDIS	ONEBIT	CTSIE	CTSE	RTSE	DMAT	DMAR	SCEN	NACK	HDSEL	IRLP	IREN	EIE
	Reset value								0	0	0	0	0	0	0	0		0	0	0	0	0	0	0	0	0	0	0	0	0	0	0	0
0x0C	USART_BRR	Res.	Res.	Res.	Res.	Res.	Res.	Res.	Res.	Res.	Res.	Res.	Res.	Res.	Res.	Res.	Res.	BRR[15:0]															
	Reset value																	0	0	0	0	0	0	0	0	0	0	0	0	0	0	0	0
0x10	USART_GTPR	Res.	Res.	Res.	Res.	Res.	Res.	Res.	Res.	Res.	Res.	Res.	Res.	Res.	Res.	Res.	Res.	GT[7:0]								PSC[7:0]							
	Reset value																	0	0	0	0	0	0	0	0	0	0	0	0	0	0	0	0
0x14	USART_RTOR	BLEN[7:0]								RTO[23:0]																							
	Reset value	0	0	0	0	0	0	0	0	0	0	0	0	0	0	0	0	0	0	0	0	0	0	0	0	0	0	0	0	0	0	0	0
0x18	USART_RQR	Res.	Res.	Res.	Res.	Res.	Res.	Res.	Res.	Res.	Res.	Res.	Res.	Res.	Res.	Res.	Res.	Res.	Res.	Res.	Res.	Res.	Res.	Res.	Res.	Res.	Res.	Res.	TXFRQ	RXFRQ	MMRQ	SBKRQ	ABRRQ
	Reset value																												0	0	0	0	0
0x1C	USART_ISR	Res.	Res.	Res.	Res.	Res.	Res.	TCBGT	Res.	Res.	REACK	TEACK	WUF	RWU	SBKF	CMF	BUSY	ABRF	ABRE	Res.	EOBF	RTOF	CTS	CTSIF	LBDF	TXE	TC	RXNE	IDLE	ORE	NF	FE	PE
	Reset value							1			0	0	0	0	0	0	0	0	0		0	0	0	0	0	1	1	0	0	0	0	0	0
0x20	USART_ICR	Res.	Res.	Res.	Res.	Res.	Res.	Res.	Res.	Res.	Res.	Res.	WUCF	Res.	Res.	CMCF	Res.	Res.	Res.	Res.	EOBCF	RTOCF	Res.	CTSCF	LBDCF	TCBGTCF	TCCF	Res.	IDLECF	ORECF	NCF	FECF	PECF
	Reset value												0			0					0	0		0	0	0	0		0	0	0	0	0
0x24	USART_RDR	Res.	Res.	Res.	Res.	Res.	Res.	Res.	Res.	Res.	Res.	Res.	Res.	Res.	Res.	Res.	Res.	Res.	Res.	Res.	Res.	Res.	Res.	Res.	RDR[8:0]								
	Reset value																								X	X	X	X	X	X	X	X	X

Table 162. USART register map and reset values (continued)

Offset	Register	31	30	29	28	27	26	25	24	23	22	21	20	19	18	17	16	15	14	13	12	11	10	9	8	7	6	5	4	3	2	1	0
0x28	**USART_TDR**	Res.	Res.	Res.	Res.	Res.	Res.	Res.	Res.	Res.	Res.	Res.	Res.	Res.	Res.	Res.	Res.	Res.	Res.	Res.	Res.	Res.	Res.	Res.	TDR[8:0]								
	Reset value																								X	X	X	X	X	X	X	X	X

Refer to *Section 2.2 on page 60* for the register boundary addresses.

36 Low-power universal asynchronous receiver transmitter (LPUART)

36.1 Introduction

The low-power universal asynchronous receiver transmitted (LPUART) is an UART which allows Full-duplex UART communications with a limited power consumption. Only 32.768 kHz LSE clock is required to allow UART communications up to 9600 baud/s. Higher baud rates can be reached when the LPUART is clocked by clock sources different from the LSE clock.

Even when the microcontroller is in Stop mode, the LPUART can wait for an incoming UART frame while having an extremely low energy consumption. The LPUART includes all necessary hardware support to make asynchronous serial communications possible with minimum power consumption.

It supports Half-duplex Single-wire communications and Modem operations (CTS/RTS).

It also supports multiprocessor communications.

DMA (direct memory access) can be used for data transmission/reception.

36.2 LPUART main features

- Full-duplex asynchronous communications
- NRZ standard format (mark/space)
- Programmable baud rate from 300 baud/s to 9600 baud/s using a 32.768 kHz clock source. Higher baud rates can be achieved by using a higher frequency clock source
- Dual clock domain allowing
  - UART functionality and wakeup from Stop mode
  - Convenient baud rate programming independent from the PCLK reprogramming
- Programmable data word length (7 or 8 or 9 bits)
- Programmable data order with MSB-first or LSB-first shifting
- Configurable stop bits (1 or 2 stop bits)
- Single-wire Half-duplex communications
- Continuous communications using DMA
- Received/transmitted bytes are buffered in reserved SRAM using centralized DMA.
- Separate enable bits for transmitter and receiver
- Separate signal polarity control for transmission and reception
- Swappable Tx/Rx pin configuration
- Hardware flow control for modem and RS-485 transceiver
- Transfer detection flags:
  - Receive buffer full
  - Transmit buffer empty
  - Busy and end of transmission flags
- Parity control:
  - Transmits parity bit
  - Checks parity of received data byte
- Four error detection flags:
  - Overrun error
  - Noise detection
  - Frame error
  - Parity error
- Fourteen interrupt sources with flags
- Multiprocessor communications

  The LPUART enters mute mode if the address does not match.
- Wakeup from mute mode (by idle line detection or address mark detection)

36.3 LPUART implementation

The STM32L431/433/443 devices embed one LPUART. Refer to *Section 35.4: USART implementation* for LPUART supported features.

36.4 LPUART functional description

Any LPUART bidirectional communication requires a minimum of two pins: Receive data In (RX) and Transmit data Out (TX):

- **RX**: Receive data Input.

  This is the serial data input.
- **TX:** Transmit data Output.

  When the transmitter is disabled, the output pin returns to its I/O port configuration. When the transmitter is enabled and nothing is to be transmitted, the TX pin is at high level. In Single-wire mode, this I/O is used to transmit and receive the data.

Through these pins, serial data is transmitted and received in normal LPUART mode as frames comprising:

- An Idle Line prior to transmission or reception
- A start bit
- A data word (7 or 8 or 9 bits) least significant bit first
- 1, 2 stop bits indicating that the frame is complete
- The LPUART interface uses a baud rate generator
- A status register (LPUART_ISR)
- Receive and transmit data registers (LPUART_RDR, LPUART_TDR)
- A baud rate register (LPUART_BRR)

Refer to *Section 36.7: LPUART registers* for the definitions of each bit.

The following pins are required in RS232 Hardware flow control mode:

- **CTS:** Clear To Send blocks the data transmission at the end of the current transfer when high
- **RTS:** Request to send indicates that the LPUART is ready to receive data (when low).

The following pin is required in RS485 Hardware control mode:

- **DE**: Driver Enable activates the transmission mode of the external transceiver.

Note: DE and RTS share the same pin.

Figure 382. LPUART Block diagram

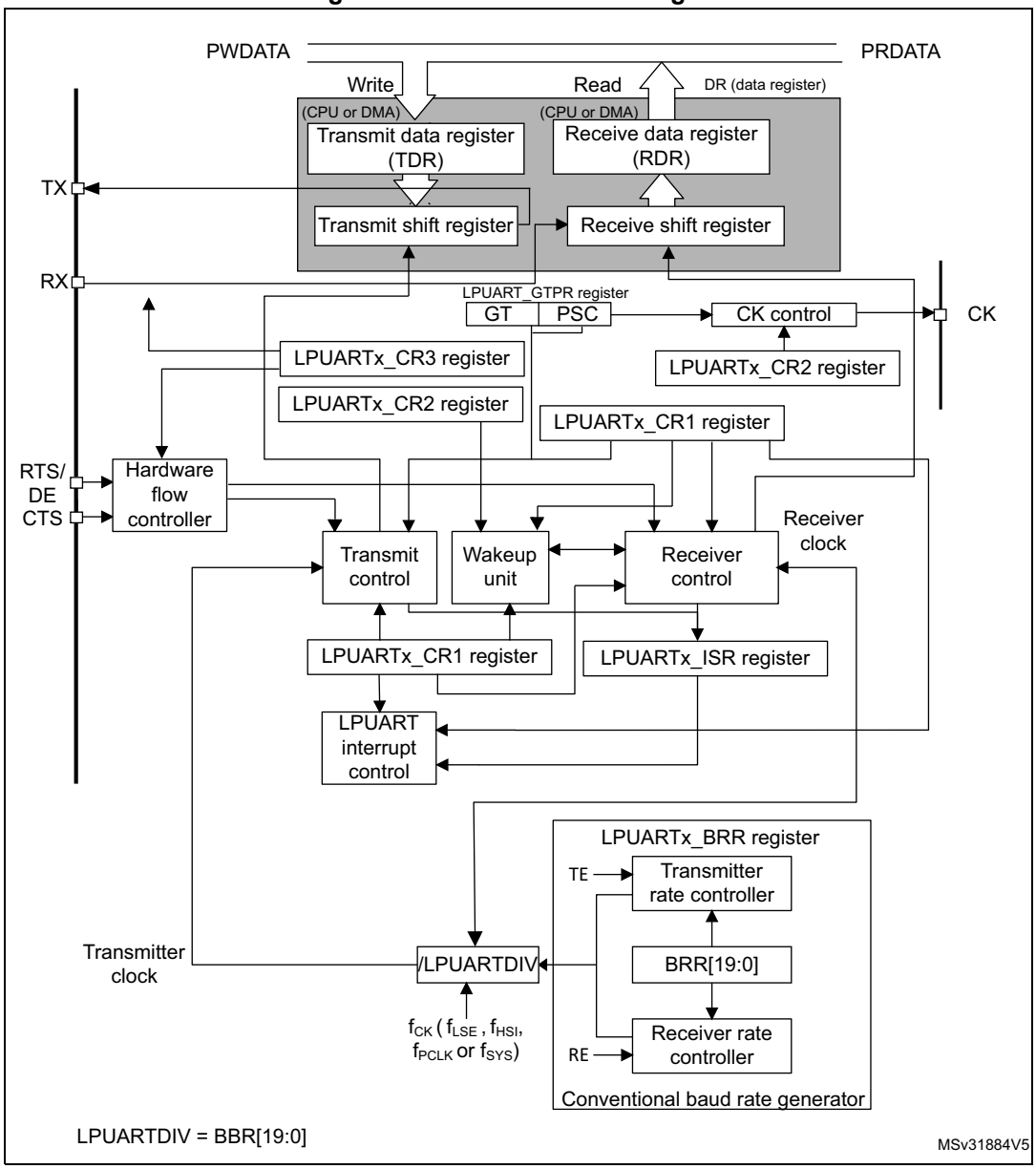

36.4.1 LPUART character description

Word length may be selected as being either 7 or 8 or 9 bits by programming the M[1:0] bits in the LPUART_CR1 register (see *Figure 383*).

- 7-bit character length: M[1:0] = 10
- 8-bit character length: M[1:0] = 00
- 9-bit character length: M[1:0] = 01

By default, the signal (TX or RX) is in low state during the start bit. It is in high state during the stop bit.

These values can be inverted, separately for each signal, through polarity configuration control.

An ***Idle character*** is interpreted as an entire frame of “1”s. (The number of “1”s includes the number of stop bits).

A ***Break character*** is interpreted on receiving “0”s for a frame period. At the end of the break frame, the transmitter inserts 2 stop bits.

Transmission and reception are driven by a common baud rate generator, the clock for each is generated when the enable bit is set respectively for the transmitter and receiver.

The details of each block is given below.

Figure 383. Word length programming

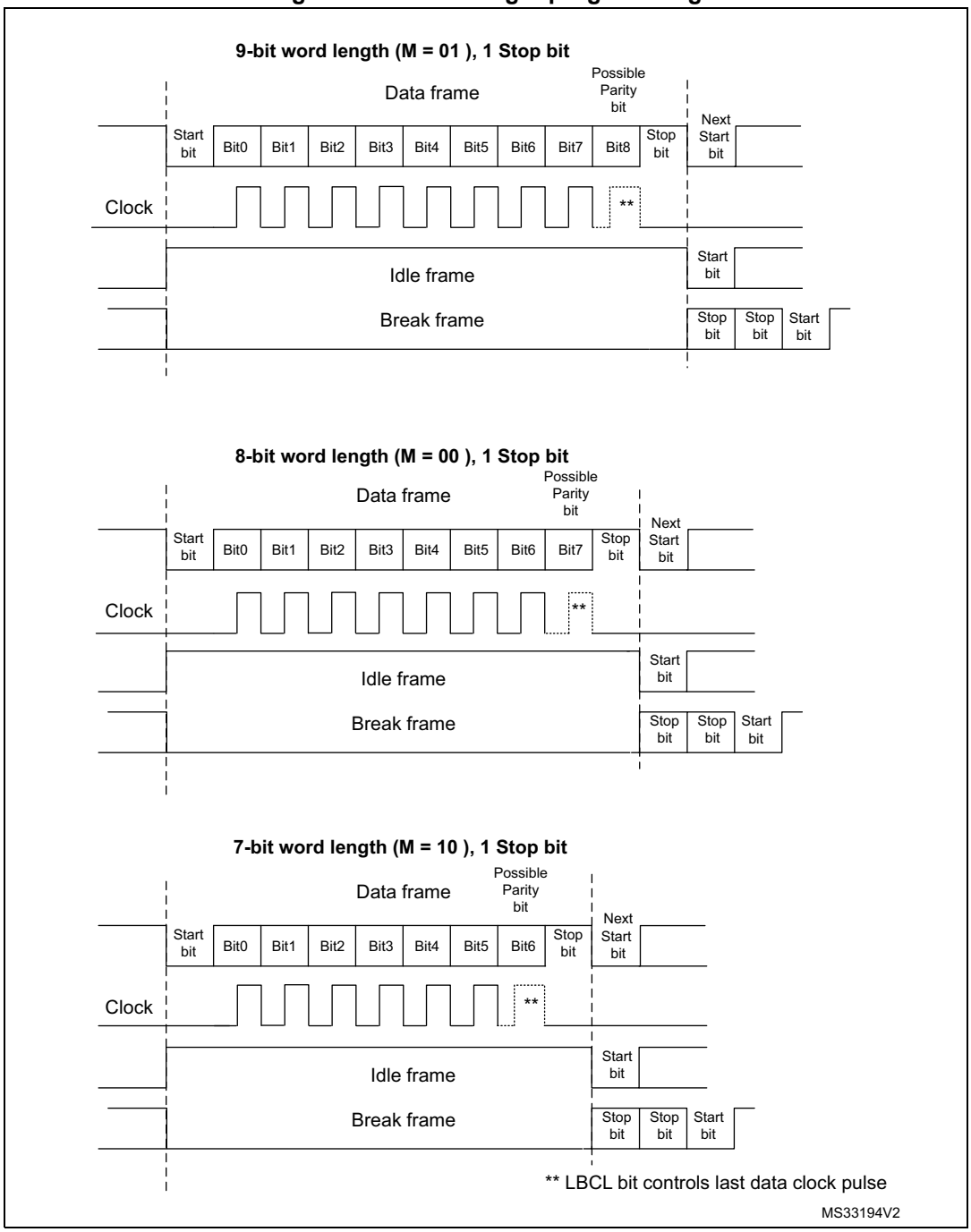

36.4.2 LPUART transmitter

The transmitter can send data words of either 7 or 8 or 9 bits depending on the M bits status. The Transmit Enable bit (TE) must be set in order to activate the transmitter function. The data in the transmit shift register is output on the TX pin.

Character transmission

During an LPUART transmission, data shifts out least significant bit first (default configuration) on the TX pin. In this mode, the LPUART_TDR register consists of a buffer (TDR) between the internal bus and the transmit shift register (see *Figure 357*).

Every character is preceded by a start bit which is a logic level low for one bit period. The character is terminated by a configurable number of stop bits.

The following stop bits are supported by LPUART: 1 and 2 stop bits.

Note: The TE bit must be set before writing the data to be transmitted to the LPUART_TDR.

The TE bit should not be reset during transmission of data. Resetting the TE bit during the transmission will corrupt the data on the TX pin as the baud rate counters will get frozen. The current data being transmitted will be lost.

An idle frame will be sent after the TE bit is enabled.

Configurable stop bits

The number of stop bits to be transmitted with every character can be programmed in Control register 2, bits 13,12.

- ***1 stop bit***: This is the default value of number of stop bits.
- ***2 stop bits***: This will be supported by normal LPUART, Single-wire and Modem modes.

An idle frame transmission will include the stop bits.

A break transmission will be 10 low bits (when M[1:0] = 00) or 11 low bits (when M[1:0] = 01) or 9 low bits (when M[1:0] = 10) followed by 2 stop bits. It is not possible to transmit long breaks (break of length greater than 9/10/11 low bits).

Figure 384. Configurable stop bits

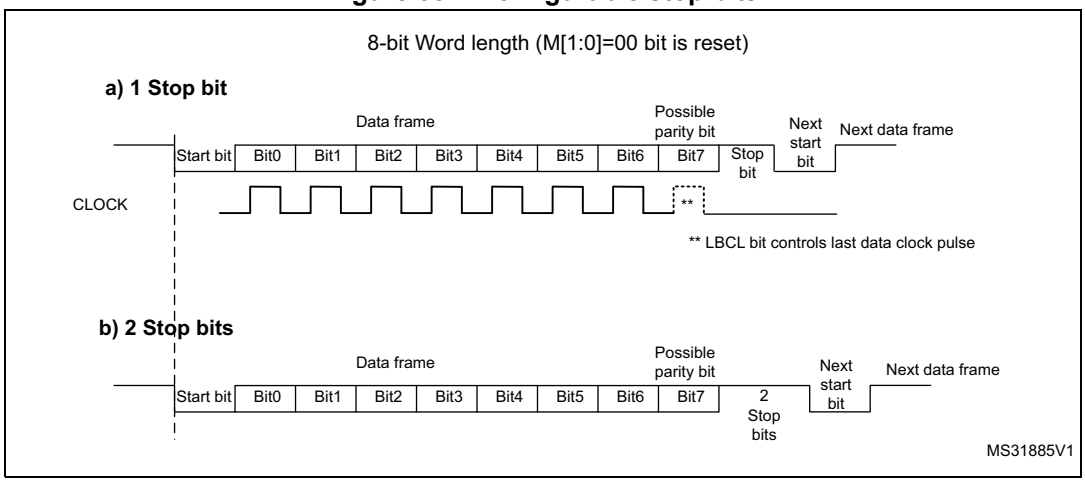

Character transmission procedure

1. Program the M bits in LPUART_CR1 to define the word length.
2. Select the desired baud rate using the LPUART_BRR register.
3. Program the number of stop bits in LPUART_CR2.
4. Enable the LPUART by writing the UE bit in LPUART_CR1 register to 1.
5. Select DMA enable (DMAT) in LPUART_CR3 if multibuffer Communication is to take place. Configure the DMA register as explained in multibuffer communication.
6. Set the TE bit in LPUART_CR1 to send an idle frame as first transmission.
7. Write the data to send in the LPUART_TDR register (this clears the TXE bit). Repeat this for each data to be transmitted in case of single buffer.
8. After writing the last data into the LPUART_TDR register, wait until TC=1. This indicates that the transmission of the last frame is complete. This is required for instance when the LPUART is disabled or enters the Halt mode to avoid corrupting the last transmission.

Single byte communication

Clearing the TXE bit is always performed by a write to the transmit data register.

The TXE bit is set by hardware and it indicates:

- The data has been moved from the LPUART_TDR register to the shift register and the data transmission has started.
- The LPUART_TDR register is empty.
- The next data can be written in the LPUART_TDR register without overwriting the previous data.

This flag generates an interrupt if the TXEIE bit is set.

When a transmission is taking place, a write instruction to the LPUART_TDR register stores the data in the TDR register; next, the data is copied in the shift register at the end of the currently ongoing transmission.

When no transmission is taking place, a write instruction to the LPUART_TDR register places the data in the shift register, the data transmission starts, and the TXE bit is set.

If a frame is transmitted (after the stop bit) and the TXE bit is set, the TC bit goes high. An interrupt is generated if the TCIE bit is set in the LPUART_CR1 register.

After writing the last data in the LPUART_TDR register, it is mandatory to wait for TC=1 before disabling the LPUART or causing the microcontroller to enter the low-power mode (see *Figure 360: TC/TXE behavior when transmitting*).

Figure 385. TC/TXE behavior when transmitting

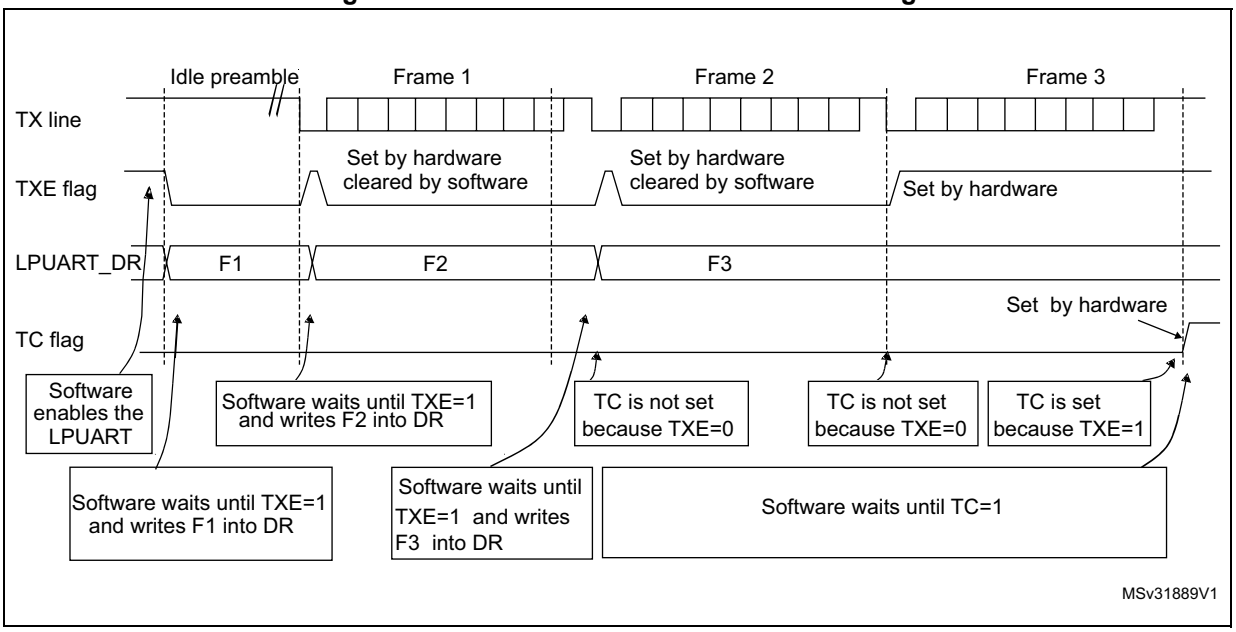

Break characters

Setting the SBKRQ bit transmits a break character. The break frame length depends on the M bits (see *Figure 383*).

If a ‘1’ is written to the SBKRQ bit, a break character is sent on the TX line after completing the current character transmission. The SBKF bit is set by the write operation and it is reset by hardware when the break character is completed (during the stop bits after the break character). The LPUART inserts a logic 1 signal (STOP) for the duration of 2 bits at the end of the break frame to guarantee the recognition of the start bit of the next frame.

In the case the application needs to send the break character following all previously inserted data, including the ones not yet transmitted, the software should wait for the TXE flag assertion before setting the SBKRQ bit.

Idle characters

Setting the TE bit drives the LPUART to send an idle frame before the first data frame.

36.4.3 LPUART receiver

The LPUART can receive data words of either 7 or 8 or 9 bits depending on the M bits in the LPUART_CR1 register.

Start bit detection

In LPUART, for START bit detection, a falling edge should be detected first on the Rx line, then a sample is taken in the middle of the start bit to confirm that it is still ‘0’. If the start sample is at ‘1’, then the noise error flag (NF) is set, then the START bit is discarded and the receiver waits for a new START bit. Else, the receiver continues to sample all incoming bits normally.

Character reception

During an LPUART reception, data shifts in least significant bit first (default configuration) through the RX pin. In this mode, the LPUART_RDR register consists of a buffer (RDR) between the internal bus and the received shift register.

Character reception procedure

1. Program the M bits in LPUART_CR1 to define the word length.
2. Select the desired baud rate using the baud rate register LPUART_BRR
3. Program the number of stop bits in LPUART_CR2.
4. Enable the LPUART by writing the UE bit in LPUART_CR1 register to 1.
5. Select DMA enable (DMAR) in LPUART_CR3 if multibuffer communication is to take place. Configure the DMA register as explained in multibuffer communication.
6. Set the RE bit LPUART_CR1. This enables the receiver which begins searching for a start bit.

When a character is received

- The RXNE bit is set. It indicates that the content of the shift register is transferred to the RDR. In other words, data has been received and can be read (as well as its associated error flags).
- An interrupt is generated if the RXNEIE bit is set.
- The error flags can be set if a frame error, noise or an overrun error has been detected during reception. PE flag can also be set with RXNE.
- In multibuffer, RXNE is set after every byte received and is cleared by the DMA read of the Receive data Register.
- In single buffer mode, clearing the RXNE bit is performed by a software read to the LPUART_RDR register. The RXNE flag can also be cleared by writing 1 to the RXFRQ in the LPUART_RQR register. The RXNE bit must be cleared before the end of the reception of the next character to avoid an overrun error.

Break character

When a break character is received, the LPUART handles it as a framing error.

Idle character

When an idle frame is detected, there is the same procedure as for a received data character plus an interrupt if the IDLEIE bit is set.

Overrun error

An overrun error occurs when a character is received when RXNE has not been reset. Data can not be transferred from the shift register to the RDR register until the RXNE bit is cleared.

The RXNE flag is set after every byte received. An overrun error occurs if RXNE flag is set when the next data is received or the previous DMA request has not been serviced. When an overrun error occurs:

- The ORE bit is set.
- The RDR content will not be lost. The previous data is available when a read to LPUART_RDR is performed.
- The shift register will be overwritten. After that point, any data received during overrun is lost.
- An interrupt is generated if either the RXNEIE bit is set or EIE bit is set.
- The ORE bit is reset by setting the ORECF bit in the ICR register.

Note: The ORE bit, when set, indicates that at least 1 data has been lost. There are two possibilities:

- if RXNE=1, then the last valid data is stored in the receive register RDR and can be read,

- if RXNE=0, then it means that the last valid data has already been read and thus there is nothing to be read in the RDR. This case can occur when the last valid data is read in the RDR at the same time as the new (and lost) data is received.

Selecting the clock source

The choice of the clock source is done through the Reset and Clock Control system (RCC). The clock source must be chosen before enabling the LPUART (by setting the UE bit).

The choice of the clock source must be done according to two criteria:

- Possible use of the LPUART in low-power mode
- Communication speed.

The clock source frequency is f_{CK}.

When the dual clock domain and the wakeup from Stop mode features are supported, the clock source can be one of the following sources: f_{PCLK} (default), f_{LSE}, f_{HSI} or f_{SYS}. Otherwise, the LPUART clock source is f_{PCLK} .

Choosing f_{LSE}, f_{HSI} as clock source may allow the LPUART to receive data while the MCU is in low-power mode. Depending on the received data and wakeup mode selection, the LPUART wakes up the MCU, when needed, in order to transfer the received data by software reading the LPUART_RDR register or by DMA.

For the other clock sources, the system must be active in order to allow LPUART communication.

The communication speed range (specially the maximum communication speed) is also determined by the clock source.

The receiver samples each incoming baud as close as possible to the middle of the baud-period. Only a single sample is taken of each of the incoming bauds.

Note: There is no noise detection for data.

Framing error

A framing error is detected when the stop bit is not recognized on reception at the expected time, following either a de-synchronization or excessive noise.

When the framing error is detected:

- The FE bit is set by hardware.
- The invalid data is transferred from the Shift register to the LPUART_RDR register.
- No interrupt is generated in case of single byte communication. However this bit rises at the same time as the RXNE bit which itself generates an interrupt. In case of multibuffer communication an interrupt will be issued if the EIE bit is set in the LPUART_CR3 register.

The FE bit is reset by writing 1 to the FECF in the LPUART_ICR register.

Configurable stop bits during reception

The number of stop bits to be received can be configured through the control bits of Control Register 2 - it can be either 1 or 2 in normal mode.

- ***1 stop bit***: Sampling for 1 stop Bit is done on the 8th, 9th and 10th samples.
- ***2 stop bits***: Sampling for the 2 stop bits is done in the middle of the second stop bit. The RXNE and FE flags are set just after this sample i.e. during the second stop bit. The first stop bit is not checked for framing error.

36.4.4 LPUART baud rate generation

The baud rate for the receiver and transmitter (Rx and Tx) are both set to the same value as programmed in the LPUART_BRR register.

The baud rate for the receiver and transmitter (Rx and Tx) are both set to the same value as programmed in the LPUART_BRR register.

$$\text{Tx/Rx baud} = \frac{256 \times f_{CK}}{\text{LPUARTDIV}}$$

LPUARTDIV is coded on the LPUART_BRR register.

Note: The baud counters are updated to the new value in the baud registers after a write operation to LPUART_BRR. Hence the baud rate register value should not be changed during communication.

It is forbidden to write values less than 0x300 in the LPUART_BRR register.

fck must be in the range [3 x baudrate, 4096 x baudrate].

The maximum baudrate that can be reached when the LPUART clock source is the LSE, is 9600 baud. Higher baudrates can be reached when the LPUART is clocked by clock sources different than the LSE clock. For example, if the LPUART clock source is the system clock (maximum is 80 MHz), the maximum baudrate that can be reached is 26 Mbaud.

Table 163. Error calculation for programmed baudrates at f_{ck} = 32,768 KHz

Baud rate		f_{CK} = 32,768 KHz		
S.No	Desired	Actual	Value programmed in the baud rate register	% Error = (Calculated - Desired) B.rate / Desired B.rate
1	300 Bps	300 Bps	0x6D3A	0
2	600 Bps	600 Bps	0x369D	0
3	1200 Bps	1200.087 Bps	0x1B4E	0.007
4	2400 Bps	2400.17 Bps	0xDA7	0.007
5	4800 Bps	4801.72 Bps	0x6D3	0.035
6	9600 Bps	9608.94 Bps	0x369	0.093

Table 164. Error calculation for programmed baudrates at f_{ck} = 80 MHz

Desired	Actual	Value programmed in the baudrate register	% Error = (Calculated - Desired) B.rate / Desired B.rate
38400	38400,02	82355	0,00006
57600	57600,09	56CE3	0,0001
115200	115200,50	2B671	0,0004
230400	230402,30	15B38	0,001
460800	460804,61	AD9C	0,001
921600	921609,22	56CE	0,001
4000000	4000000,00	1400	0
10000000	10000000,00	800	0
20000000	20000000,00	400	0
26000000	26022871,66	313	0,09

36.4.5 Tolerance of the LPUART receiver to clock deviation

The asynchronous receiver of the LPUART works correctly only if the total clock system deviation is less than the tolerance of the LPUART receiver. The causes which contribute to the total deviation are:

- DTRA: Deviation due to the transmitter error (which also includes the deviation of the transmitter's local oscillator)
- DQUANT: Error due to the baud rate quantization of the receiver
- DREC: Deviation of the receiver's local oscillator
- DTCL: Deviation due to the transmission line (generally due to the transceivers which can introduce an asymmetry between the low-to-high transition timing and the high-to-low transition timing)

$$\text{DTRA} + \text{DQUANT} + \text{DREC} + \text{DTCL} + \text{DWU} < \text{LPUART receiver tolerance}$$

where

DWU is the error due to sampling point deviation when the wakeup from Stop mode is used.

when M[1:0] = 01:

$$\text{DWU} = \frac{t_{\text{WULPUART}}}{11 \times \text{Tbit}}$$

when M[1:0] = 00:

$$\text{DWU} = \frac{t_{\text{WULPUART}}}{10 \times \text{Tbit}}$$

when M[1:0] = 10:

$$\text{DWU} = \frac{t_{\text{WULPUART}}}{9 \times \text{Tbit}}$$

t_{WULPUART} is the time between detecting the wakeup event and both clock (requested by the peripheral) and regulator ready.

The LPUART receiver can receive data correctly at up to the maximum tolerated deviation specified in *Table 165*:

- 7, 8 or 9-bit character length defined by the M bits in the LPUARTx_CR1 register
- 1 or 2 stop bits

Table 165. Tolerance of the LPUART receiver when BRR [3:0] is different from 0000

M bits	768 ≤ BRR <1024	1024 ≤ BRR < 2048	2048 ≤ BRR < 4096	4096 ≤ BRR
8 bits (M=00), 1 stop bit	1.82%	2.56%	3.90%	4.42%
9 bits (M=01), 1 stop bit	1.69%	2.33%	2.53%	4.14%
7 bits (M=10), 1 stop bit	2.08%	2.86%	4.35%	4.42%
8 bits (M=00), 2 stop bit	2.08%	2.86%	4.35%	4.42%
9 bits (M=01), 2 stop bit	1.82%	2.56%	3.90%	4.42%
7 bits (M=10), 2stop bit	2.34%	3.23%	4.92%	4.42%

Note: The data specified in Table 165 may slightly differ in the special case when the received frames contain some Idle frames of exactly 10-bit durations when M bits = 00 (11-bit durations when M bits =01 or 9- bit durations when M bits = 10).

36.4.6 Multiprocessor communication using LPUART

It is possible to perform multiprocessor communication with the LPUART (with several LPUARTs connected in a network). For instance one of the LPUARTs can be the master, its TX output connected to the RX inputs of the other LPUARTs. The others are slaves, their respective TX outputs are logically ANDed together and connected to the RX input of the master.

In multiprocessor configurations it is often desirable that only the intended message recipient should actively receive the full message contents, thus reducing redundant LPUART service overhead for all non addressed receivers.

The non addressed devices may be placed in mute mode by means of the muting function. In order to use the mute mode feature, the MME bit must be set in the LPUART_CR1 register.

In mute mode:

- None of the reception status bits can be set.
- All the receive interrupts are inhibited.
- The RWU bit in LPUART_ISR register is set to 1. RWU can be controlled automatically by hardware or by software, through the MMRQ bit in the LPUART_RQR register, under certain conditions.

The LPUART can enter or exit from mute mode using one of two methods, depending on the WAKE bit in the LPUART_CR1 register:

- Idle Line detection if the WAKE bit is reset,
- Address Mark detection if the WAKE bit is set.

Idle line detection (WAKE=0)

The LPUART enters mute mode when the MMRQ bit is written to 1 and the RWU is automatically set.

It wakes up when an Idle frame is detected. Then the RWU bit is cleared by hardware but the IDLE bit is not set in the LPUART_ISR register. An example of mute mode behavior using Idle line detection is given in *Figure 364*.

Figure 386. Mute mode using Idle line detection

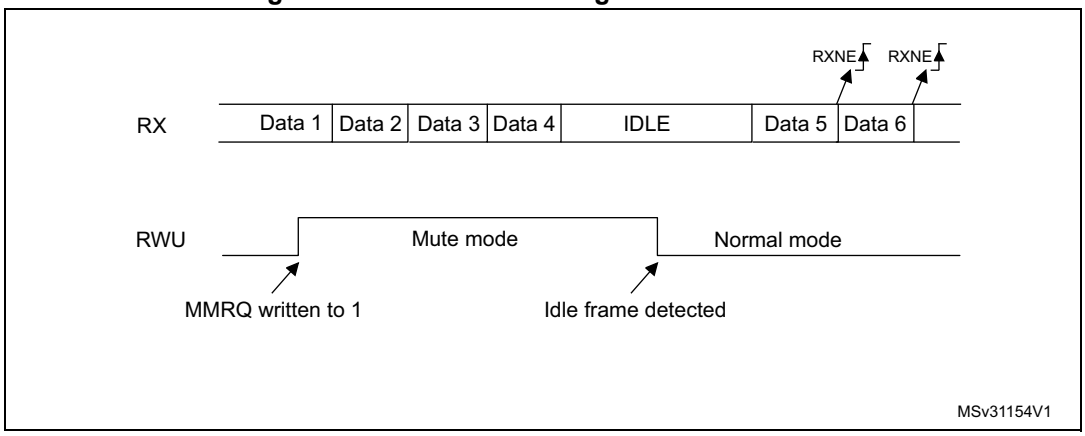

Note: If the MMRQ is set while the IDLE character has already elapsed, mute mode will not be entered (RWU is not set).

If the LPUART is activated while the line is IDLE, the idle state is detected after the duration of one IDLE frame (not only after the reception of one character frame).

4-bit/7-bit address mark detection (WAKE=1)

In this mode, bytes are recognized as addresses if their MSB is a ‘1’ otherwise they are considered as data. In an address byte, the address of the targeted receiver is put in the 4 or 7 LSBs. The choice of 7 or 4 bit address detection is done using the ADDM7 bit. This 4-bit/7-bit word is compared by the receiver with its own address which is programmed in the ADD bits in the LPUART_CR2 register.

Note: In 7-bit and 9-bit data modes, address detection is done on 6-bit and 8-bit addresses (ADD[5:0] and ADD[7:0]) respectively.

The LPUART enters mute mode when an address character is received which does not match its programmed address. In this case, the RWU bit is set by hardware. The RXNE flag is not set for this address byte and no interrupt or DMA request is issued when the LPUART enters mute mode.

The LPUART also enters mute mode when the MMRQ bit is written to 1. The RWU bit is also automatically set in this case.

The LPUART exits from mute mode when an address character is received which matches the programmed address. Then the RWU bit is cleared and subsequent bytes are received normally. The RXNE bit is set for the address character since the RWU bit has been cleared.

An example of mute mode behavior using address mark detection is given in *Figure 365*.

Figure 387. Mute mode using address mark detection

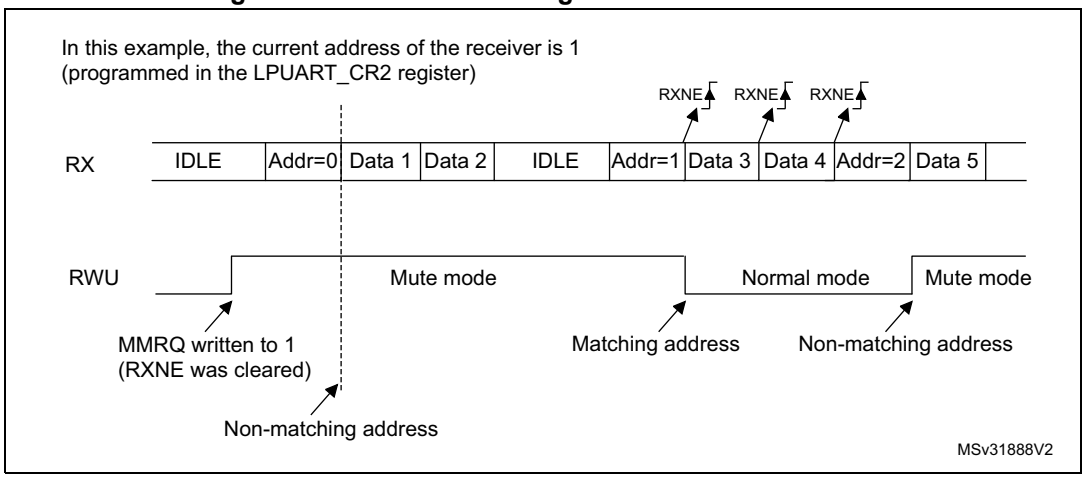

36.4.7 LPUART parity control

Parity control (generation of parity bit in transmission and parity checking in reception) can be enabled by setting the PCE bit in the LPUART_CR1 register. Depending on the frame length defined by the M bits, the possible LPUART frame formats are as listed in *Table 159*.

Table 166. Frame formats

M bits	PCE bit	LPUART frame(1)
00	0	| SB | 8-bit data | STB |
00	1	| SB | 7-bit data | PB | STB |
01	0	| SB | 9-bit data | STB |
01	1	| SB | 8-bit data | PB | STB |
10	0	| SB | 7-bit data | STB |
10	1	| SB | 6-bit data | PB | STB |

1. Legends: SB: start bit, STB: stop bit, PB: parity bit.
2. In the data register, the PB is always taking the MSB position (9th, 8th or 7th, depending on the M bits value).

Even parity

The parity bit is calculated to obtain an even number of “1s” inside the frame which is made of the 6, 7 or 8 LSB bits (depending on M bits values) and the parity bit.

As an example, if data=00110101, and 4 bits are set, then the parity bit will be 0 if even parity is selected (PS bit in LPUART_CR1 = 0).

Odd parity

The parity bit is calculated to obtain an odd number of “1s” inside the frame made of the 6, 7 or 8 LSB bits (depending on M bits values) and the parity bit.

As an example, if data=00110101 and 4 bits set, then the parity bit will be 1 if odd parity is selected (PS bit in LPUART_CR1 = 1).

Parity checking in reception

If the parity check fails, the PE flag is set in the LPUART_ISR register and an interrupt is generated if PEIE is set in the LPUART_CR1 register. The PE flag is cleared by software writing 1 to the PECF in the LPUART_ICR register.

Parity generation in transmission

If the PCE bit is set in LPUARTx_CR1, then the MSB bit of the data written in the data register is transmitted but is changed by the parity bit (even number of “1s” if even parity is selected (PS=0) or an odd number of “1s” if odd parity is selected (PS=1)).

36.4.8 Single-wire Half-duplex communication using LPUART

Single-wire Half-duplex mode is selected by setting the HDSEL bit in the LPUART_CR3 register. In this mode, the following bits must be kept cleared:

- LINEN and CLKEN bits in the LPUART_CR2 register,
- SCEN and IREN bits in the LPUART_CR3 register.

The LPUART can be configured to follow a Single-wire Half-duplex protocol where the TX and RX lines are internally connected. The selection between half- and Full-duplex communication is made with a control bit HDSEL in LPUART_CR3.

As soon as HDSEL is written to 1:

- The TX and RX lines are internally connected
- The RX pin is no longer used
- The TX pin is always released when no data is transmitted. Thus, it acts as a standard I/O in idle or in reception. It means that the I/O must be configured so that TX is configured as alternate function open-drain with an external pull-up.

Apart from this, the communication protocol is similar to normal LPUART mode. Any conflicts on the line must be managed by software (by the use of a centralized arbiter, for instance). In particular, the transmission is never blocked by hardware and continues as soon as data is written in the data register while the TE bit is set.

Note: In LPUART, in the case of 1-stop bit configuration, the RXNE flag is set in the middle of the stop bit.

36.4.9 Continuous communication in DMA mode using LPUART

The LPUART is capable of performing continuous communication using the DMA. The DMA requests for Rx buffer and Tx buffer are generated independently.

Note: Use the LPUART as explained in Section 36.4.3. To perform continuous communication, you can clear the TXE/ RXNE flags In the LPUART_ISR register.

Transmission using DMA

DMA mode can be enabled for transmission by setting DMAT bit in the LPUART_CR3 register. Data is loaded from a SRAM area configured using the DMA peripheral (refer to *Section 11: Direct memory access controller (DMA) on page 281*) to the LPUART_TDR register whenever the TXE bit is set. To map a DMA channel for LPUART transmission, use the following procedure (x denotes the channel number):

1. Write the LPUART_TDR register address in the DMA control register to configure it as the destination of the transfer. The data is moved to this address from memory after each TXE event.
2. Write the memory address in the DMA control register to configure it as the source of the transfer. The data is loaded into the LPUART_TDR register from this memory area after each TXE event.
3. Configure the total number of bytes to be transferred to the DMA control register.
4. Configure the channel priority in the DMA register
5. Configure DMA interrupt generation after half/ full transfer as required by the application.
6. Clear the TC flag in the LPUART_ISR register by setting the TCCF bit in the LPUART_ICR register.
7. Activate the channel in the DMA register.

When the number of data transfers programmed in the DMA Controller is reached, the DMA controller generates an interrupt on the DMA channel interrupt vector.

In transmission mode, once the DMA has written all the data to be transmitted (the TCIF flag is set in the DMA_ISR register), the TC flag can be monitored to make sure that the LPUART communication is complete. This is required to avoid corrupting the last transmission before disabling the LPUART or entering Stop mode. Software must wait until TC=1. The TC flag remains cleared during all data transfers and it is set by hardware at the end of transmission of the last frame.

Figure 388. Transmission using DMA

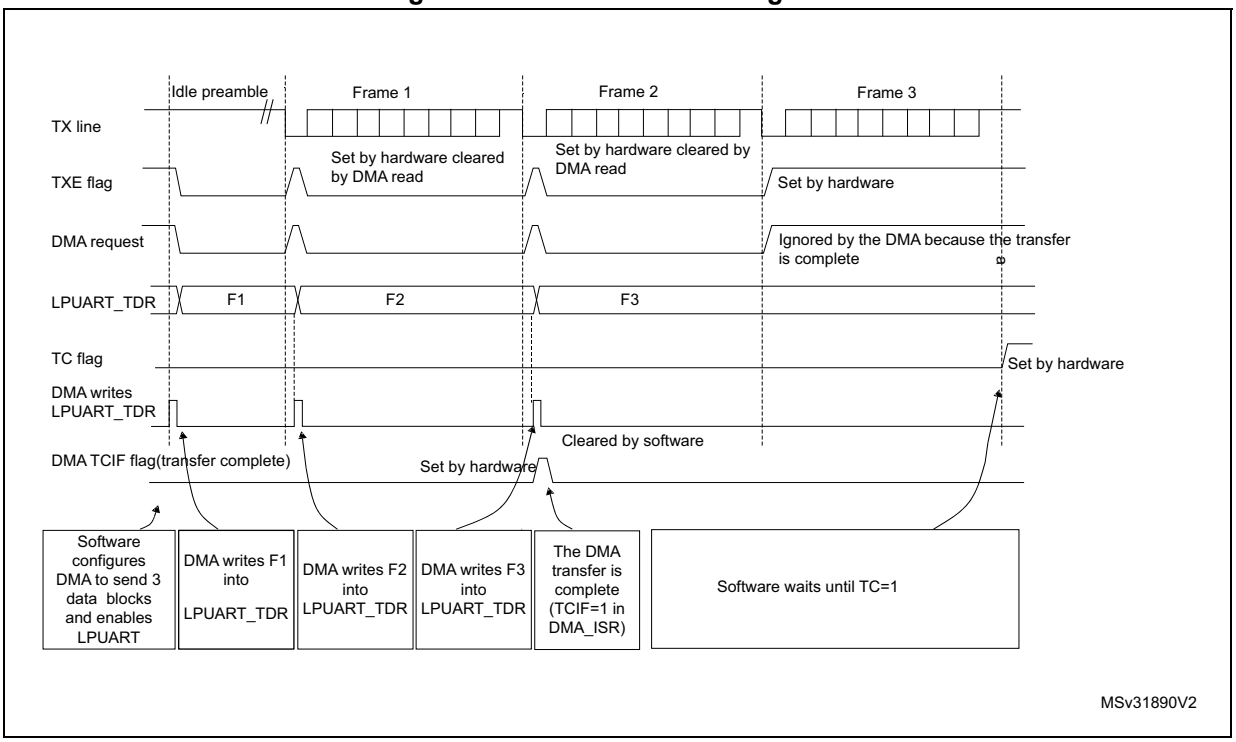

Reception using DMA

DMA mode can be enabled for reception by setting the DMAR bit in LPUART_CR3 register. Data is loaded from the LPUART_RDR register to a SRAM area configured using the DMA peripheral (refer *Section 11: Direct memory access controller (DMA) on page 281*) whenever a data byte is received. To map a DMA channel for LPUART reception, use the following procedure:

1. Write the LPUART_RDR register address in the DMA control register to configure it as the source of the transfer. The data is moved from this address to the memory after each RXNE event.
2. Write the memory address in the DMA control register to configure it as the destination of the transfer. The data is loaded from LPUART_RDR to this memory area after each RXNE event.
3. Configure the total number of bytes to be transferred to the DMA control register.
4. Configure the channel priority in the DMA control register
5. Configure interrupt generation after half/ full transfer as required by the application.
6. Activate the channel in the DMA control register.

When the number of data transfers programmed in the DMA Controller is reached, the DMA controller generates an interrupt on the DMA channel interrupt vector.

Figure 389. Reception using DMA

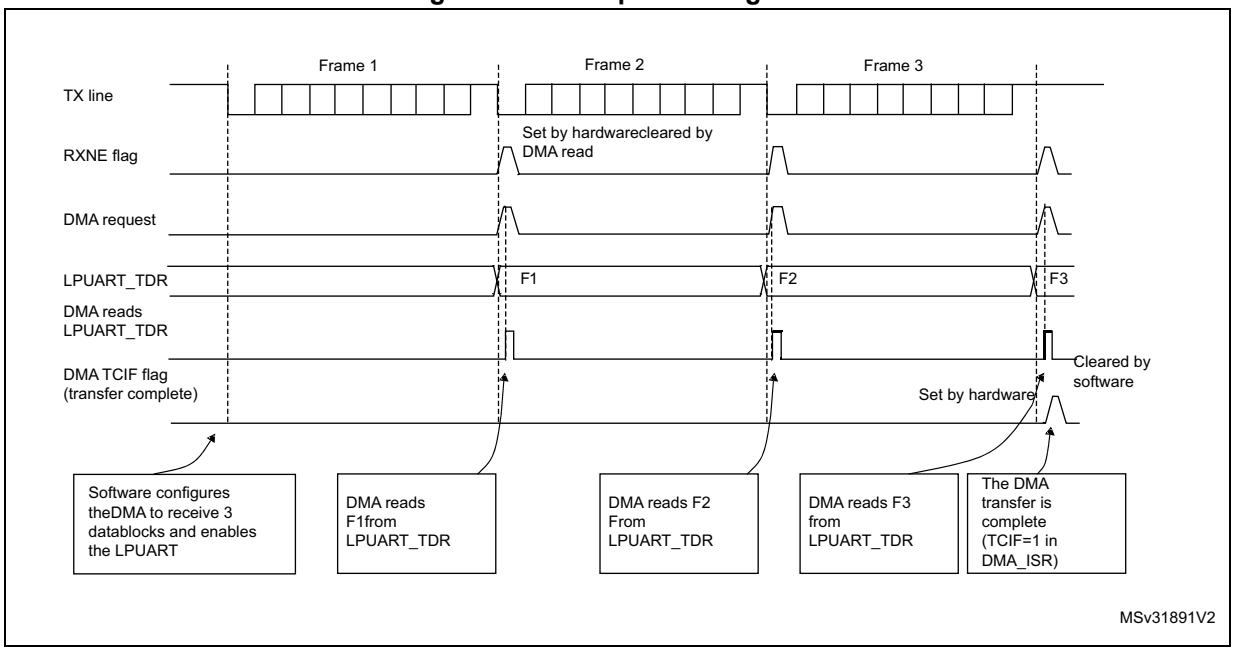

Error flagging and interrupt generation in multibuffer communication

In multibuffer communication if any error occurs during the transaction the error flag is asserted after the current byte. An interrupt is generated if the interrupt enable flag is set. For framing error, overrun error and noise flag which are asserted with RXNE in single byte reception, there is a separate error flag interrupt enable bit (EIE bit in the LPUART_CR3 register), which, if set, enables an interrupt after the current byte if any of these errors occur.

36.4.10 RS232 Hardware flow control and RS485 Driver Enable using LPUART

It is possible to control the serial data flow between 2 devices by using the CTS input and the RTS output. The *Figure 378* shows how to connect 2 devices in this mode:

Figure 390. Hardware flow control between 2 LPUARTs

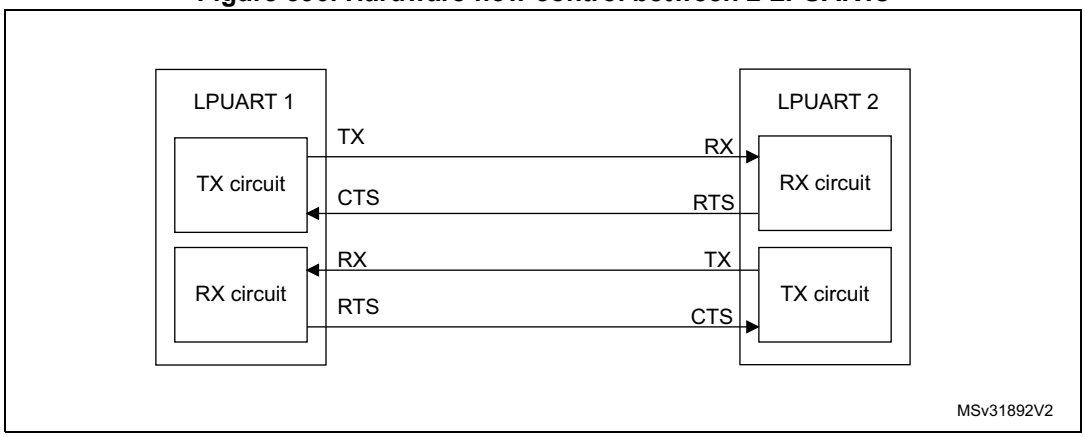

RS232 RTS and CTS flow control can be enabled independently by writing the RTSE and CTSE bits respectively to 1 (in the LPUART_CR3 register).

RS232 RTS flow control

If the RTS flow control is enabled (RTSE=1), then RTS is asserted (tied low) as long as the LPUART receiver is ready to receive a new data. when the receive register is full, RTS is de-asserted, indicating that the transmission is expected to stop at the end of the current frame. *Figure 379* shows an example of communication with RTS flow control enabled.

Figure 391. RS232 RTS flow control

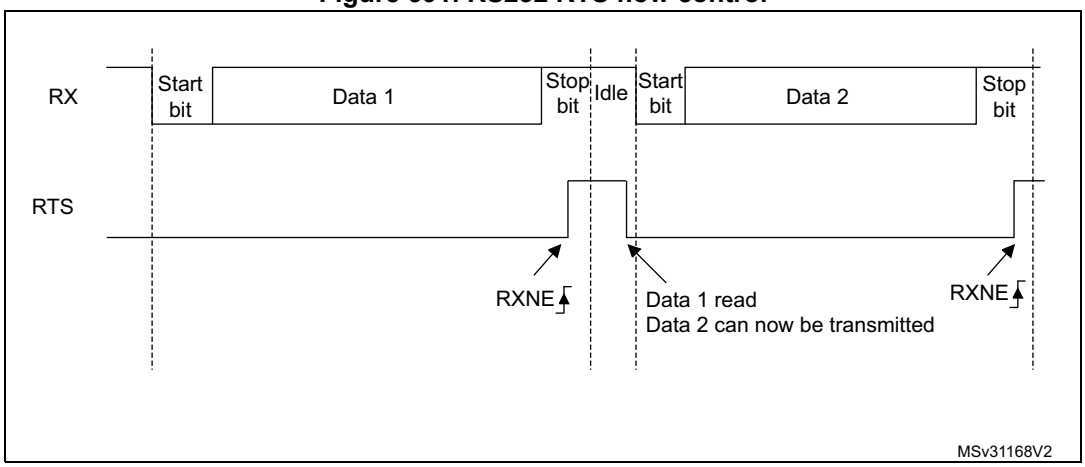

RS232 CTS flow control

If the CTS flow control is enabled (CTSE=1), then the transmitter checks the CTS input before transmitting the next frame. If CTS is asserted (tied low), then the next data is transmitted (assuming that data is to be transmitted, in other words, if TXE=0), else the transmission does not occur. When CTS is de-asserted during a transmission, the current transmission is completed before the transmitter stops.

When CTSE=1, the CTSIF status bit is automatically set by hardware as soon as the CTS input toggles. It indicates when the receiver becomes ready or not ready for communication. An interrupt is generated if the CTSIE bit in the LPUART_CR3 register is set. *Figure 380* shows an example of communication with CTS flow control enabled.

Figure 392. RS232 CTS flow control

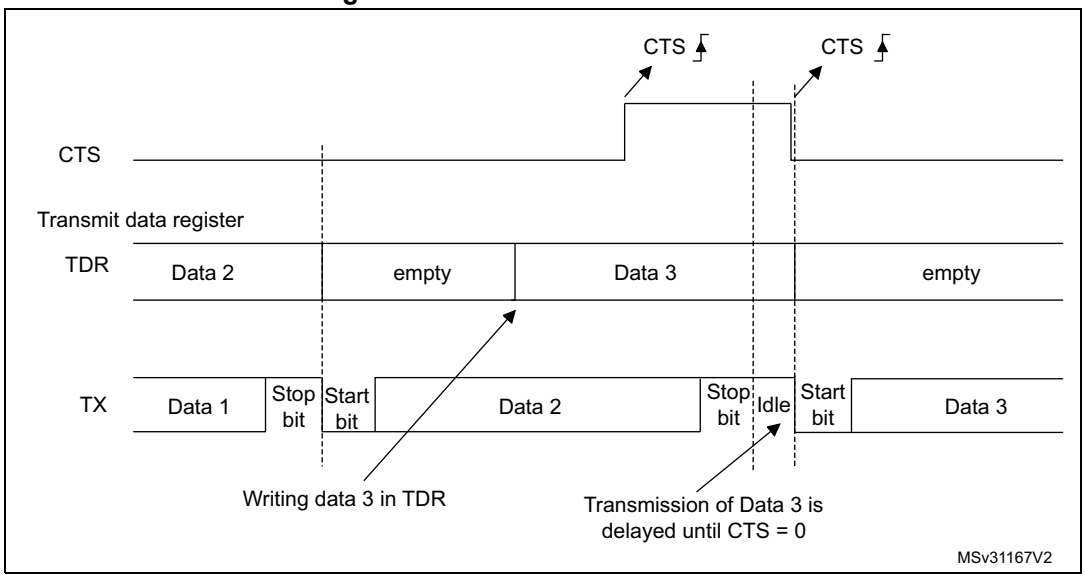

Note: For correct behavior, CTS must be asserted at least 3 LPUART clock source periods before the end of the current character. In addition it should be noted that the CTSCF flag may not be set for pulses shorter than 2 x PCLK periods.

RS485 Driver Enable

The driver enable feature is enabled by setting bit DEM in the LPUART_CR3 control register. This allows the user to activate the external transceiver control, through the DE (Driver Enable) signal. The assertion time is the time between the activation of the DE signal and the beginning of the START bit. It is programmed using the DEAT [4:0] bit fields in the LPUART_CR1 control register. The de-assertion time is the time between the end of the last stop bit, in a transmitted message, and the de-activation of the DE signal. It is programmed using the DEDT [4:0] bit fields in the LPUART_CR3 control register. The polarity of the DE signal can be configured using the DEP bit in the LPUART_CR3 control register.

In LPUART, the DEAT and DEDT are expressed in USART clock source (f_{CK}) cycles:

- The Driver enable assertion time =
  - (1 + (DEAT x P)) x f_{CK} , if P <> 0
  - (1 + DEAT) x f_{CK} , if P = 0
- The Driver enable de-assertion time =
  - (1 + (DEDT x P)) x f_{CK} , if P <> 0
  - (1 + DEDT) x f_{CK} , if P = 0

With P = BRR[14:11]

36.4.11 Wakeup from Stop mode using LPUART

The LPUART is able to wake up the MCU from Stop mode when the UESM bit is set and the LPUART clock is set to HSI16 or LSE (refer to the *Reset and clock control (RCC) section*.

- LPUART source clock is HSI

  If during stop mode the HSI clock is switched OFF, when a falling edge on the LPUART receive line is detected, the LPUART interface requests the HSI clock to be switched ON. The HSI clock is then used for the frame reception.
  - If the wakeup event is verified, the MCU wakes up from low-power mode and data reception goes on normally.
  - If the wakeup event is not verified, the HSI clock is switched OFF again, the MCU is not waken up and stays in low-power mode and the clock request is released.
- LPUART source clock is LSE

  Same principle as described in case of LPUART source clock is HSI with the difference that the LSE is ON in stop mode, but the LSE clock is not propagated to LPUART if the LPUART is not requesting it. The LSE clock is not OFF but there is a clock gating to avoid useless consumption.

When the LPUART clock source is configured to be f_{LSE} or f_{HSI}, it is possible to keep enabled this clock during STOP mode by setting the UCESM bit in LPUART_CR3 control register.

The MCU wakeup from Stop mode can be done using the standard RXNE interrupt. In this case, the RXNEIE bit must be set before entering Stop mode.

Alternatively, a specific interrupt may be selected through the WUS bit fields.

In order to be able to wake up the MCU from Stop mode, the UESM bit in the LPUART_CR1 control register must be set prior to entering Stop mode.

When the wakeup event is detected, the WUF flag is set by hardware and a wakeup interrupt is generated if the WUFIE bit is set.

Note: Before entering Stop mode, the user must ensure that the LPUART is not performing a transfer. BUSY flag cannot ensure that Stop mode is never entered during a running reception.

The WUF flag is set when a wakeup event is detected, independently of whether the MCU is in Stop or in an active mode.

When entering Stop mode just after having initialized and enabled the receiver, the REACK bit must be checked to ensure the LPUART is actually enabled.

When DMA is used for reception, it must be disabled before entering Stop mode and re-enabled upon exit from Stop mode.

The wakeup from Stop mode feature is not available for all modes. For example it doesn't work in SPI mode because the SPI operates in master mode only.

Using Mute mode with Stop mode

If the LPUART is put into Mute mode before entering Stop mode:

- Wakeup from Mute mode on idle detection must not be used, because idle detection cannot work in Stop mode.
- If the wakeup from Mute mode on address match is used, then the source of wake-up from Stop mode must also be the address match. If the RXNE flag is set when entering

the Stop mode, the interface will remain in mute mode upon address match and wake up from Stop.

- If the LPUART is configured to wake up the MCU from Stop mode on START bit detection, the WUF flag is set, but the RXNE flag is not set.

Determining the maximum LPUART baudrate allowing to wakeup correctly from Stop mode when the LPUART clock source is the HSI clock

The maximum baudrate allowing to wakeup correctly from stop mode depends on:

- the parameter $t_{WULPUART}$ (wakeup time from Stop mode) provided in the device datasheet
- the LPUART receiver tolerance provided in the *Section 36.4.5: Tolerance of the LPUART receiver to clock deviation*.

Let us take this example: M bits = 01, 2 stop bits, BRR ≥ 4096.

In these conditions, according to *Table 165: Tolerance of the LPUART receiver when BRR [3:0] is different from 0000*, the LPUART receiver tolerance is 4.42 %.

DTRA + DQUANT + DREC + DTCL + DWU < LPUART receiver tolerance

DWU max = $t_{WULPUART}$ / (11 x Tbit Min)

Tbit Min = $t_{WULPUART}$ / (11 x DWU max)

If we consider an ideal case where the parameters DTRA, DQUANT, DREC and DTCL are at 0%, the DWU max is 4.42 %. In reality, we need to consider at least the HSI inaccuracy.

Let us consider the HSI inaccuracy = 1 %, $t_{WULPUART}$ = 1.7 µs (in case of Stop mode with main regulator in Run mode, Range 1):

DWU max = 4.42 % - 1 % = 3.42 %

Tbit min = 1.7 µs / (11 x 3.42 %) = 4.5 µs.

In these conditions, the maximum baudrate allowing to wakeup correctly from Stop mode is 1/ 4.5 µs = 220 Kbaud.

36.5 LPUART low-power mode

Table 167. Effect of low-power modes on the LPUART

Mode	Description
Sleep	No effect.
Low-power run	No effect.
Low-power sleep	No effect. USART interrupt causes the device to exit Low-power sleep mode.
Stop 0, Stop 1 and Stop 2	The LPUART registers content is kept. The LPUART is able to wake up the MCU from Stop 0, Stop 1 and Stop 2 modes when the UESM bit is set and the LPUART clock is set to HSI16 or LSE. The MCU wakeup from Stop 0, Stop 1 and 2 modes can be done using either the standard RXNE or the WUF interrupt.

Table 167. Effect of low-power modes on the LPUART (continued)

Mode	Description
Standby	The LPUART is powered down and must be reinitialized when the device has exited from Standby or Shutdown mode.
Shutdown	

36.6 LPUART interrupts

Table 168. LPUART interrupt requests

Interrupt event	Event flag	Enable Control bit
Transmit data register empty	TXE	TXEIE
CTS interrupt	CTSIF	CTSIE
Transmission Complete	TC	TCIE
Receive data register not empty (data ready to be read)	RXNE	RXNEIE
Overrun error detected	ORE	
Idle line detected	IDLE	IDLEIE
Parity error	PE	PEIE
Noise Flag, Overrun error and Framing Error in multibuffer communication.	NF or ORE or FE	EIE
Character match	CMF	CMIE
Wakeup from Stop mode	WUF(1)	WUFIE

1. The wUF interrupt is active only in Stop mode.

The LPUART interrupt events are connected to the same interrupt vector (see *Figure 381*).

- During transmission: Transmission Complete, Clear to Send, Transmit data Register empty or Framing error interrupt.
- During reception: Idle Line detection, Overrun error, Receive data register not empty, Parity error, Noise Flag, Framing Error, Character match, etc.

These events generate an interrupt if the corresponding Enable Control Bit is set.

Figure 393. LPUART interrupt mapping diagram

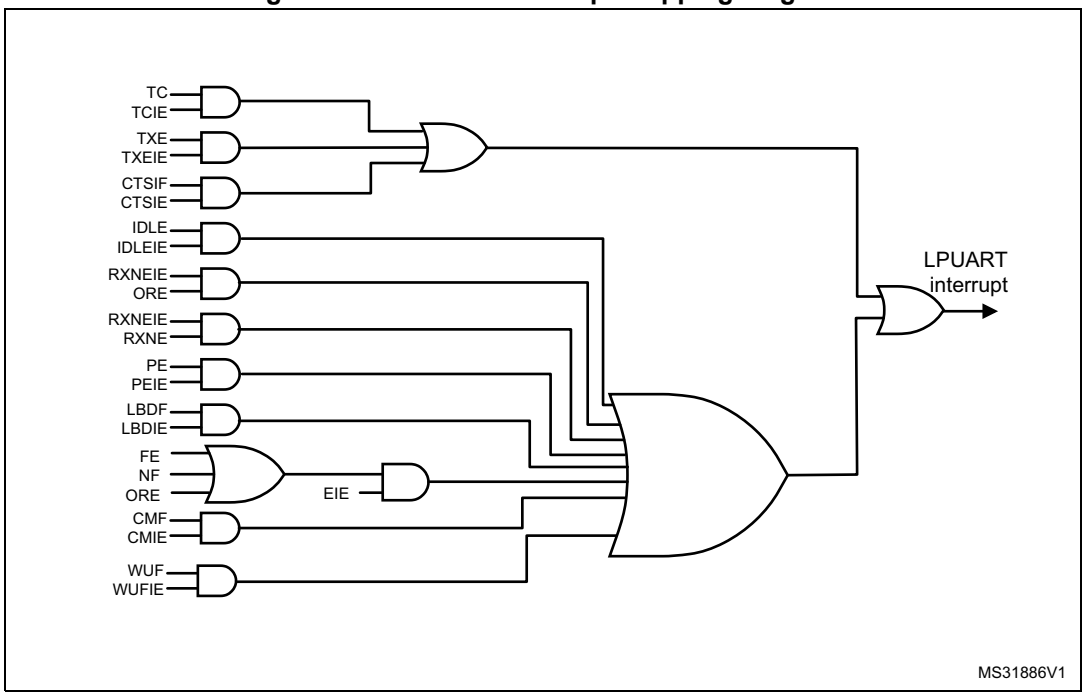

36.7 LPUART registers

Refer to *Section 1.1 on page 55* for a list of abbreviations used in register descriptions.

36.7.1 Control register 1 (LPUART_CR1)

Address offset: 0x00

Reset value: 0x0000

31	30	29	28	27	26	25	24	23	22	21	20	19	18	17	16
Res.	Res.	Res.	M1	Res.	Res.	DEAT[4:0]					DEDT[4:0]				
			rw			rw	rw	rw	rw	rw	rw	rw	rw	rw	rw
15	14	13	12	11	10	9	8	7	6	5	4	3	2	1	0
Res.	CMIE	MME	M0	WAKE	PCE	PS	PEIE	TXEIE	TCIE	RXNEIE	IDLEIE	TE	RE	UESM	UE
	rw	rw	rw	rw	rw	rw	rw	rw	rw	rw	rw	rw	rw	rw	rw

Bits 31:29 Reserved, must be kept at reset value

Bit 28 **M1**: Word length

This bit, with bit 12 (M0) determines the word length. It is set or cleared by software.
M[1:0] = 00: 1 Start bit, 8 data bits, n stop bits
M[1:0] = 01: 1 Start bit, 9 data bits, n stop bits
M[1:0] = 10: 1 Start bit, 7 data bits, n stop bits
This bit can only be written when the LPUART is disabled (UE=0).

Note: In 7-bit data length mode, the Smartcard mode, LIN master mode and Autobaudrate (0x7F and 0x55 frames detection) are not supported.

Bit 27 Reserved, must be kept at reset value

Bit 26 Reserved, must be kept at reset value

Bits 25:21 **DEAT[4:0]**: Driver Enable assertion time

This 5-bit value defines the time between the activation of the DE (Driver Enable) signal and the beginning of the start bit. It is expressed in UCLK (USART clock) clock cycles. For more details, refer to RS485 Driver Enable paragraph.
This bit field can only be written when the LPUART is disabled (UE=0).

Bits 20:16 **DEDT[4:0]**: Driver Enable de-assertion time

This 5-bit value defines the time between the end of the last stop bit, in a transmitted message, and the de-activation of the DE (Driver Enable) signal. It is expressed in UCLK (USART clock) clock cycles. For more details, refer to RS485 Driver Enable paragraph.
If the LPUART_TDR register is written during the DEDT time, the new data is transmitted only when the DEDT and DEAT times have both elapsed.
This bit field can only be written when the LPUART is disabled (UE=0).

Bit 15 Reserved, must be kept at reset value

Bit 14 **CMIE**: Character match interrupt enable

This bit is set and cleared by software.
0: Interrupt is inhibited
1: A LPUART interrupt is generated when the CMF bit is set in the LPUART_ISR register.

Bit 13 **MME**: Mute mode enable

This bit activates the mute mode function of the LPUART. When set, the LPUART can switch between the active and mute modes, as defined by the WAKE bit. It is set and cleared by software.

0: Receiver in active mode permanently

1: Receiver can switch between mute mode and active mode.

Bit 12 **M0**: Word length

This bit, with bit 28 (M1) determines the word length. It is set or cleared by software. See Bit 28 (M1) description.

This bit can only be written when the LPUART is disabled (UE=0).

Bit 11 **WAKE**: Receiver wakeup method

This bit determines the LPUART wakeup method from Mute mode. It is set or cleared by software.

0: Idle line

1: Address mark

This bit field can only be written when the LPUART is disabled (UE=0).

Bit 10 **PCE**: Parity control enable

This bit selects the hardware parity control (generation and detection). When the parity control is enabled, the computed parity is inserted at the MSB position (9th bit if M=1; 8th bit if M=0) and parity is checked on the received data. This bit is set and cleared by software. Once it is set, PCE is active after the current byte (in reception and in transmission).

0: Parity control disabled

1: Parity control enabled

This bit field can only be written when the LPUART is disabled (UE=0).

Bit 9 **PS**: Parity selection

This bit selects the odd or even parity when the parity generation/detection is enabled (PCE bit set). It is set and cleared by software. The parity will be selected after the current byte.

0: Even parity

1: Odd parity

This bit field can only be written when the LPUART is disabled (UE=0).

Bit 8 **PEIE**: PE interrupt enable

This bit is set and cleared by software.

0: Interrupt is inhibited

1: An LPUART interrupt is generated whenever PE=1 in the LPUART_ISR register

Bit 7 **TXEIE**: interrupt enable

This bit is set and cleared by software.

0: Interrupt is inhibited

1: An LPUART interrupt is generated whenever TXE=1 in the LPUART_ISR register

Bit 6 **TCIE**: Transmission complete interrupt enable

This bit is set and cleared by software.

0: Interrupt is inhibited

1: An LPUART interrupt is generated whenever TC=1 in the LPUART_ISR register

Bit 5 **RXNEIE**: RXNE interrupt enable

This bit is set and cleared by software.

0: Interrupt is inhibited

1: An LPUART interrupt is generated whenever ORE=1 or RXNE=1 in the LPUART_ISR register

Bit 4 **IDLEIE**: IDLE interrupt enable

This bit is set and cleared by software.

0: Interrupt is inhibited

1: An LPUART interrupt is generated whenever IDLE=1 in the LPUART_ISR register

Bit 3 **TE**: Transmitter enable

This bit enables the transmitter. It is set and cleared by software.

0: Transmitter is disabled

1: Transmitter is enabled

Note: During transmission, a "0" pulse on the TE bit ("0" followed by "1") sends a preamble (idle line) after the current word. In order to generate an idle character, the TE must not be immediately written to 1. In order to ensure the required duration, the software can poll the TEACK bit in the LPUART_ISR register.

When TE is set there is a 1 bit-time delay before the transmission starts.

Bit 2 **RE**: Receiver enable

This bit enables the receiver. It is set and cleared by software.

0: Receiver is disabled

1: Receiver is enabled and begins searching for a start bit

Bit 1 **UESM**: LPUART enable in Stop mode

When this bit is cleared, the LPUART is not able to wake up the MCU from Stop mode.

When this bit is set, the LPUART is able to wake up the MCU from Stop mode, provided that the LPUART clock selection is HSI or LSE in the RCC.

This bit is set and cleared by software.

0: LPUART not able to wake up the MCU from Stop mode.

1: LPUART able to wake up the MCU from Stop mode. When this function is active, the clock source for the LPUART must be HSI or LSE (see Section Reset and clock control (RCC)).

Note: It is recommended to set the UESM bit just before entering Stop mode and clear it on exit from Stop mode.

Bit 0 **UE**: LPUART enable

When this bit is cleared, the LPUART prescalers and outputs are stopped immediately, and current operations are discarded. The configuration of the LPUART is kept, but all the status flags, in the LPUART_ISR are reset. This bit is set and cleared by software.

0: LPUART prescaler and outputs disabled, low-power mode

1: LPUART enabled

Note: In order to go into low-power mode without generating errors on the line, the TE bit must be reset before and the software must wait for the TC bit in the LPUART_ISR to be set before resetting the UE bit.

The DMA requests are also reset when UE = 0 so the DMA channel must be disabled before resetting the UE bit.

36.7.2 Control register 2 (LPUART_CR2)

Address offset: 0x04

Reset value: 0x0000

31	30	29	28	27	26	25	24	23	22	21	20	19	18	17	16
ADD[7:4]				ADD[3:0]				Res.	Res.	Res.	Res.	MSBFIRST	DATAINV	TXINV	RXINV
rw	rw	rw	rw	rw	rw	rw	rw					rw	rw	rw	rw

15	14	13	12	11	10	9	8	7	6	5	4	3	2	1	0
SWAP	Res.	STOP[1:0]		Res.	Res.	Res.	Res.	Res.	Res.	Res.	ADDM7	Res.	Res.	Res.	Res.
rw		rw	rw								rw				

Bits 31:28 **ADD[7:4]**: Address of the LPUART node

This bit-field gives the address of the LPUART node or a character code to be recognized.

This is used in multiprocessor communication during Mute mode or Stop mode, for wakeup with 7-bit address mark detection. The MSB of the character sent by the transmitter should be equal to 1. It may also be used for character detection during normal reception, Mute mode inactive (for example, end of block detection in Modbus protocol). In this case, the whole received character (8-bit) is compared to the ADD[7:0] value and CMF flag is set on match.

This bit field can only be written when reception is disabled (RE = 0) or the LPUART is disabled (UE=0)

Bits 27:24 **ADD[3:0]**: Address of the LPUART node

This bit-field gives the address of the LPUART node or a character code to be recognized.

This is used in multiprocessor communication during Mute mode or Stop mode, for wakeup with address mark detection.

This bit field can only be written when reception is disabled (RE = 0) or the LPUART is disabled (UE=0)

Bits 23:20 Reserved, must be kept at reset value

Bit 19 **MSBFIRST**: Most significant bit first

This bit is set and cleared by software.

0: data is transmitted/received with data bit 0 first, following the start bit.

1: data is transmitted/received with the MSB (bit 7/8/9) first, following the start bit.

This bit field can only be written when the LPUART is disabled (UE=0).

Bit 18 **DATAINV:** Binary data inversion

This bit is set and cleared by software.

0: Logical data from the data register are send/received in positive/direct logic. (1=H, 0=L)

1: Logical data from the data register are send/received in negative/inverse logic. (1=L, 0=H). The parity bit is also inverted.

This bit field can only be written when the LPUART is disabled (UE=0).

Bit 17 **TXINV:** TX pin active level inversion

This bit is set and cleared by software.

0: TX pin signal works using the standard logic levels (V_{DD} =1/idle, Gnd=0/mark)

1: TX pin signal values are inverted. (V_{DD} =0/mark, Gnd=1/idle).

This allows the use of an external inverter on the TX line.

This bit field can only be written when the LPUART is disabled (UE=0).

Bit 16 **RXINV:** RX pin active level inversion

This bit is set and cleared by software.

0: RX pin signal works using the standard logic levels (V_{DD} =1/idle, Gnd=0/mark)

1: RX pin signal values are inverted. ((V_{DD} =0/mark, Gnd=1/idle).

This allows the use of an external inverter on the RX line.

This bit field can only be written when the LPUART is disabled (UE=0).

Bit 15 **SWAP:** Swap TX/RX pins

This bit is set and cleared by software.

0: TX/RX pins are used as defined in standard pinout

1: The TX and RX pins functions are swapped. This allows to work in the case of a cross-wired connection to another UART.

This bit field can only be written when the LPUART is disabled (UE=0).

Bit 14 Reserved, must be kept at reset value

Bits 13:12 **STOP[1:0]**: STOP bits

These bits are used for programming the stop bits.

00: 1 stop bit

01: Reserved.

10: 2 stop bits

11: Reserved

This bit field can only be written when the LPUART is disabled (UE=0).

Bits 11:5 Reserved, must be kept at reset value

Bit 4 **ADDM7**:7-bit Address Detection/4-bit Address Detection

This bit is for selection between 4-bit address detection or 7-bit address detection.

0: 4-bit address detection

1: 7-bit address detection (in 8-bit data mode)

This bit can only be written when the LPUART is disabled (UE=0)

Note: In 7-bit and 9-bit data modes, the address detection is done on 6-bit and 8-bit address (ADD[5:0] and ADD[7:0]) respectively.

Bits 3:0 Reserved, must be kept at reset value.

36.7.3 Control register 3 (LPUART_CR3)

Address offset: 0x08

Reset value: 0x0000

31	30	29	28	27	26	25	24	23	22	21	20	19	18	17	16
Res.	Res.	Res.	Res.	Res.	Res.	Res.	Res.	UCESM	WUFIE	WUS[2:0]		Res.	Res.	Res.	Res.
								rw	rw	rw	rw				

15	14	13	12	11	10	9	8	7	6	5	4	3	2	1	0
DEP	DEM	DDRE	OVR DIS	Res.	CTSIE	CTSE	RTSE	DMAT	DMAR	Res.	Res.	HD SEL	Res.	Res.	EIE
rw	rw	rw	rw		rw	rw	rw	rw	rw			rw			rw

Bits 31:24 Reserved, must be kept at reset value.

Bit 23 **UCESM**: LPUART Clock Enable in Stop mode.
This bit is set and cleared by software.
0: LPUART Clock is disabled in STOP mode.
1: LPUART Clock is enabled in STOP mode.

Bit 22 **WUFIE**: Wakeup from Stop mode interrupt enable
This bit is set and cleared by software.
0: Interrupt is inhibited
1: An LPUART interrupt is generated whenever WUF=1 in the LPUART_ISR register

Note: WUFIE must be set before entering in Stop mode.
The WUF interrupt is active only in Stop mode.
If the LPUART does not support the wakeup from Stop feature, this bit is reserved and forced by hardware to '0'.

Bits 21:20 **WUS[1:0]**: Wakeup from Stop mode interrupt flag selection
This bit-field specify the event which activates the WUF (wakeup from Stop mode flag).
00: WUF active on address match (as defined by ADD[7:0] and ADDM7)
01:Reserved.
10: WUF active on Start bit detection
11: WUF active on RXNE.
This bit field can only be written when the LPUART is disabled (UE=0).

Note: If the LPUART does not support the wakeup from Stop feature, this bit is reserved and forced by hardware to '0'.

Bits 19:16 Reserved, must be kept at reset value.

Bit 15 **DEP**: Driver enable polarity selection
0: DE signal is active high.
1: DE signal is active low.
This bit can only be written when the LPUART is disabled (UE=0).

Bit 14 **DEM**: Driver enable mode
This bit allows the user to activate the external transceiver control, through the DE signal.
0: DE function is disabled.
1: DE function is enabled. The DE signal is output on the RTS pin.
This bit can only be written when the LPUART is disabled (UE=0).

Bit 13 **DDRE**: DMA Disable on Reception Error

0: DMA is not disabled in case of reception error. The corresponding error flag is set but RXNE is kept 0 preventing from overrun. As a consequence, the DMA request is not asserted, so the erroneous data is not transferred (no DMA request), but next correct received data will be transferred.

1: DMA is disabled following a reception error. The corresponding error flag is set, as well as RXNE. The DMA request is masked until the error flag is cleared. This means that the software must first disable the DMA request (DMAR = 0) or clear RXNE before clearing the error flag.

This bit can only be written when the LPUART is disabled (UE=0).

Note: The reception errors are: parity error, framing error or noise error.

Bit 12 **OVRDIS**: Overrun Disable

This bit is used to disable the receive overrun detection.

0: Overrun Error Flag, ORE, is set when received data is not read before receiving new data.

1: Overrun functionality is disabled. If new data is received while the RXNE flag is still set the ORE flag is not set and the new received data overwrites the previous content of the LPUART_RDR register.

This bit can only be written when the LPUART is disabled (UE=0).

Note: This control bit allows checking the communication flow without reading the data.

Bit 11 Reserved, must be kept at reset value.

Bit 10 **CTSIE**: CTS interrupt enable

0: Interrupt is inhibited

1: An interrupt is generated whenever CTSIF=1 in the LPUART_ISR register

Bit 9 **CTSE**: CTS enable

0: CTS hardware flow control disabled

1: CTS mode enabled, data is only transmitted when the CTS input is asserted (tied to 0). If the CTS input is de-asserted while data is being transmitted, then the transmission is completed before stopping. If data is written into the data register while CTS is de-asserted, the transmission is postponed until CTS is asserted.

This bit can only be written when the LPUART is disabled (UE=0)

Bit 8 **RTSE**: RTS enable

0: RTS hardware flow control disabled

1: RTS output enabled, data is only requested when there is space in the receive buffer. The transmission of data is expected to cease after the current character has been transmitted. The RTS output is asserted (pulled to 0) when data can be received.

This bit can only be written when the LPUART is disabled (UE=0).

Bit 7 **DMAT**: DMA enable transmitter

This bit is set/reset by software

1: DMA mode is enabled for transmission

0: DMA mode is disabled for transmission

Bit 6 **DMAR**: DMA enable receiver

This bit is set/reset by software

1: DMA mode is enabled for reception

0: DMA mode is disabled for reception

Bits 5:4 Reserved, must be kept at reset value.

Bit 3 **HDSEL**: Half-duplex selection
Selection of Single-wire Half-duplex mode
0: Half duplex mode is not selected
1: Half duplex mode is selected
This bit can only be written when the LPUART is disabled (UE=0).

Bits 2:1 Reserved, must be kept at reset value.

Bit 0 **EIE**: Error interrupt enable
Error Interrupt Enable Bit is required to enable interrupt generation in case of a framing error, overrun error or noise flag (FE=1 or ORE=1 or NF=1 in the LPUART_ISR register).
0: Interrupt is inhibited
1: An interrupt is generated when FE=1 or ORE=1 or NF=1 in the LPUART_ISR register.

36.7.4 Baud rate register (LPUART_BRR)

This register can only be written when the LPUART is disabled (UE=0).

Address offset: 0x0C

Reset value: 0x0000

31	30	29	28	27	26	25	24	23	22	21	20	19	18	17	16
Res.	Res.	Res.	Res.	Res.	Res.	Res.	Res.	Res.	Res.	Res.	Res.	BRR[19:16]			
												rw	rw	rw	rw

15	14	13	12	11	10	9	8	7	6	5	4	3	2	1	0
BRR[15:0]															
rw	rw	rw	rw	rw	rw	rw	rw	rw	rw	rw	rw	rw	rw	rw	rw

Bits 31:20 Reserved, must be kept at reset value.

Bits 19:0 **BRR[19:0]**

Note: It is forbidden to write values less than 0x300 in the LPUART_BRR register.

Provided that LPUARTx_BRR must be > = 0x300 and LPUART_BRR is 20-bit, a care should be taken when generating high baudrates using high fck values. fck must be in the range [3 x baudrate,.4096 x baudrate].

36.7.5 Request register (LPUART_RQR)

Address offset: 0x18

Reset value: 0x0000

31	30	29	28	27	26	25	24	23	22	21	20	19	18	17	16
Res.	Res.	Res.	Res.	Res.	Res.	Res.	Res.	Res.	Res.	Res.	Res.	Res.	Res.	Res.	Res.

15	14	13	12	11	10	9	8	7	6	5	4	3	2	1	0
Res.	Res.	Res.	Res.	Res.	Res.	Res.	Res.	Res.	Res.	Res.	Res.	RXFRQ	MMRQ	SBKRQ	Res.
												w	w	w	

Bits 31:4 Reserved, must be kept at reset value

Bit 3 **RXFRQ**: Receive data flush request

Writing 1 to this bit clears the RXNE flag.

This allows to discard the received data without reading it, and avoid an overrun condition.

Bit 2 **MMRQ**: Mute mode request

Writing 1 to this bit puts the LPUART in mute mode and resets the RWU flag.

Bit 1 **SBKRQ**: Send break request

Writing 1 to this bit sets the SBKF flag and request to send a BREAK on the line, as soon as the transmit machine is available.

Note: In the case the application needs to send the break character following all previously inserted data, including the ones not yet transmitted, the software should wait for the TXE flag assertion before setting the SBKRQ bit.

Bit 0 Reserved, must be kept at reset value

36.7.6 Interrupt & status register (LPUART_ISR)

Address offset: 0x1C

Reset value: 0x00C0

31	30	29	28	27	26	25	24	23	22	21	20	19	18	17	16
Res.	Res.	Res.	Res.	Res.	Res.	Res.	Res.	Res.	RE ACK	TE ACK	WUF	RWU	SBKF	CMF	BUSY
									r	r	r	r	r	r	r

15	14	13	12	11	10	9	8	7	6	5	4	3	2	1	0
Res.	Res.	Res.	Res.	Res.	CTS	CTSIF	Res.	TXE	TC	RXNE	IDLE	ORE	NF	FE	PE
					r	r		r	r	r	r	r	r	r	r

Bits 31:23 Reserved, must be kept at reset value.

Bit 22 **REACK**: Receive enable acknowledge flag

This bit is set/reset by hardware, when the Receive Enable value is taken into account by the LPUART.

It can be used to verify that the LPUART is ready for reception before entering Stop mode.

Note: If the LPUART does not support the wakeup from Stop feature, this bit is reserved and forced by hardware to '0'.

Bit 21 **TEACK**: Transmit enable acknowledge flag

This bit is set/reset by hardware, when the Transmit Enable value is taken into account by the LPUART.

It can be used when an idle frame request is generated by writing TE=0, followed by TE=1 in the LPUART_CR1 register, in order to respect the TE=0 minimum period.

Bit 20 **WUF**: Wakeup from Stop mode flag

This bit is set by hardware, when a wakeup event is detected. The event is defined by the WUS bit field. It is cleared by software, writing a 1 to the WUCF in the LPUART_ICR register.

An interrupt is generated if WUFIE=1 in the LPUART_CR3 register.

Note: When UESM is cleared, WUF flag is also cleared.

The WUF interrupt is active only in Stop mode.

If the LPUART does not support the wakeup from Stop feature, this bit is reserved and forced by hardware to '0'.

Bit 19 **RWU**: *Receiver wakeup from Mute mode*

This bit indicates if the LPUART is in mute mode. It is cleared/set by hardware when a wakeup/mute sequence is recognized. The mute mode control sequence (address or IDLE) is selected by the WAKE bit in the LPUART_CR1 register.

When wakeup on IDLE mode is selected, this bit can only be set by software, writing 1 to the MMRQ bit in the LPUART_RQR register.

0: Receiver in active mode

1: Receiver in mute mode

Note: If the LPUART does not support the wakeup from Stop feature, this bit is reserved and forced by hardware to '0'.

Bit 18 **SBKF**: Send break flag

This bit indicates that a send break character was requested. It is set by software, by writing 1 to the SBKRQ bit in the LPUART_CR3 register. It is automatically reset by hardware during the stop bit of break transmission.

0: No break character is transmitted

1: Break character will be transmitted

Bit 17 **CMF**: Character match flag

This bit is set by hardware, when the character defined by ADD[7:0] is received. It is cleared by software, writing 1 to the CMCF in the LPUART_ICR register.

An interrupt is generated if CMIE=1in the LPUART_CR1 register.

0: No Character match detected

1: Character Match detected

Bit 16 **BUSY**: Busy flag

This bit is set and reset by hardware. It is active when a communication is ongoing on the RX line (successful start bit detected). It is reset at the end of the reception (successful or not).

0: LPUART is idle (no reception)

1: Reception on going

Bits 15:11 Reserved, must be kept at reset value.

Bit 10 **CTS**: CTS flag

This bit is set/reset by hardware. It is an inverted copy of the status of the CTS input pin.

0: CTS line set

1: CTS line reset

Note: If the hardware flow control feature is not supported, this bit is reserved and forced by hardware to '0'.

Bit 9 **CTSIF**: CTS interrupt flag

This bit is set by hardware when the CTS input toggles, if the CTSE bit is set. It is cleared by software, by writing 1 to the CTSCF bit in the LPUART_ICR register.

An interrupt is generated if CTSIE=1 in the LPUART_CR3 register.

0: No change occurred on the CTS status line

1: A change occurred on the CTS status line

Note: If the hardware flow control feature is not supported, this bit is reserved and forced by hardware to '0'.

Bit 8 Reserved, must be kept at reset value.

Bit 7 **TXE**: Transmit data register empty

This bit is set by hardware when the content of the LPUART_TDR register has been transferred into the shift register. It is cleared by a write to the LPUART_TDR register.

An interrupt is generated if the TXEIE bit =1 in the LPUART_CR1 register.

0: data is not transferred to the shift register

1: data is transferred to the shift register)

Note: This bit is used during single buffer transmission.

Bit 6 **TC**: Transmission complete

This bit is set by hardware if the transmission of a frame containing data is complete and if TXE is set. An interrupt is generated if TCIE=1 in the LPUART_CR1 register. It is cleared by software, writing 1 to the TCCF in the LPUART_ICR register or by a write to the LPUART_TDR register.

An interrupt is generated if TCIE=1 in the LPUART_CR1 register.

0: Transmission is not complete

1: Transmission is complete

Note: If TE bit is reset and no transmission is on going, the TC bit will be set immediately.

Bit 5 **RXNE**: Read data register not empty

This bit is set by hardware when the content of the RDR shift register has been transferred to the LPUART_RDR register. It is cleared by a read to the LPUART_RDR register. The RXNE flag can also be cleared by writing 1 to the RXFRQ in the LPUART_RQR register.

An interrupt is generated if RXNEIE=1 in the LPUART_CR1 register.

0: data is not received

1: Received data is ready to be read.

Bit 4 **IDLE**: Idle line detected

This bit is set by hardware when an Idle Line is detected. An interrupt is generated if IDLEIE=1 in the LPUART_CR1 register. It is cleared by software, writing 1 to the IDLECF in the LPUART_ICR register.

0: No Idle line is detected

1: Idle line is detected

Note: The IDLE bit will not be set again until the RXNE bit has been set (i.e. a new idle line occurs).

If mute mode is enabled (MME=1), IDLE is set if the LPUART is not mute (RWU=0), whatever the mute mode selected by the WAKE bit. If RWU=1, IDLE is not set.

Bit 3 **ORE**: Overrun error

This bit is set by hardware when the data currently being received in the shift register is ready to be transferred into the RDR register while RXNE=1. It is cleared by a software, writing 1 to the ORECF, in the LPUART_ICR register.

An interrupt is generated if RXNEIE=1 or EIE = 1 in the LPUART_CR1 register.

0: No overrun error

1: Overrun error is detected

Note: When this bit is set, the RDR register content is not lost but the shift register is overwritten. An interrupt is generated if the ORE flag is set during multibuffer communication if the EIE bit is set.

This bit is permanently forced to 0 (no overrun detection) when the OVRDIS bit is set in the LPUART_CR3 register.

Bit 2 **NF**: START bit Noise detection flag

This bit is set by hardware when noise is detected on the START bit of a received frame. It is cleared by software, writing 1 to the NFCF bit in the LPUART_ICR register.

0: No noise is detected

1: Noise is detected

Note: This bit does not generate an interrupt as it appears at the same time as the RXNE bit which itself generates an interrupt. An interrupt is generated when the NF flag is set during multibuffer communication if the EIE bit is set.

Bit 1 **FE**: Framing error

This bit is set by hardware when a de-synchronization, excessive noise or a break character is detected. It is cleared by software, writing 1 to the FECF bit in the LPUART_ICR register.

An interrupt is generated if EIE = 1 in the LPUART_CR1 register.

0: No Framing error is detected

1: Framing error or break character is detected

Bit 0 **PE**: Parity error

This bit is set by hardware when a parity error occurs in receiver mode. It is cleared by software, writing 1 to the PECF in the LPUART_ICR register.

An interrupt is generated if PEIE = 1 in the LPUART_CR1 register.

0: No parity error

1: Parity error

36.7.7 Interrupt flag clear register (LPUART_ICR)

Address offset: 0x20

Reset value: 0x0000

31	30	29	28	27	26	25	24	23	22	21	20	19	18	17	16
Res.	Res.	Res.	Res.	Res.	Res.	Res.	Res.	Res.	Res.	Res.	WUCF	Res.	Res.	CMCF	Res.
											w			w	

15	14	13	12	11	10	9	8	7	6	5	4	3	2	1	0
Res.	Res.	Res.	Res.	Res.	Res.	CTSCF	Res.	Res.	TCCF	Res.	IDLECF	ORECF	NCF	FECF	PECF
						w			w		w	w	w	w	w

Bits 31:21 Reserved, must be kept at reset value.

Bit 20 **WUCF**: Wakeup from Stop mode clear flag

Writing 1 to this bit clears the WUF flag in the LPUART_ISR register.

Note: If the LPUART does not support the wakeup from Stop feature, this bit is reserved and forced by hardware to '0'.

Bits 19:18 Reserved, must be kept at reset value.

Bit 17 **CMCF**: Character match clear flag

Writing 1 to this bit clears the CMF flag in the LPUART_ISR register.

Bits 16:10 Reserved, must be kept at reset value.

Bit 9 **CTSCF**: CTS clear flag

Writing 1 to this bit clears the CTSIF flag in the LPUART_ISR register.

Bits 8:7 Reserved, must be kept at reset value.

Bit 6 **TCCF**: Transmission complete clear flag
Writing 1 to this bit clears the TC flag in the LPUART_ISR register.

Bit 5 Reserved, must be kept at reset value.

Bit 4 **IDLECF**: Idle line detected clear flag
Writing 1 to this bit clears the IDLE flag in the LPUART_ISR register.

Bit 3 **ORECF**: Overrun error clear flag
Writing 1 to this bit clears the ORE flag in the LPUART_ISR register.

Bit 2 **NCF**: Noise detected clear flag
Writing 1 to this bit clears the NF flag in the LPUART_ISR register.

Bit 1 **FECF**: Framing error clear flag
Writing 1 to this bit clears the FE flag in the LPUART_ISR register.

Bit 0 **PECF**: Parity error clear flag
Writing 1 to this bit clears the PE flag in the LPUART_ISR register.

36.7.8 Receive data register (LPUART_RDR)

Address offset: 0x24

Reset value: Undefined

31	30	29	28	27	26	25	24	23	22	21	20	19	18	17	16
Res.	Res.	Res.	Res.	Res.	Res.	Res.	Res.	Res.	Res.	Res.	Res.	Res.	Res.	Res.	Res.

15	14	13	12	11	10	9	8	7	6	5	4	3	2	1	0
Res.	Res.	Res.	Res.	Res.	Res.	Res.	RDR[8:0]								
							r	r	r	r	r	r	r	r	r

Bits 31:9 Reserved, must be kept at reset value.

Bits 8:0 **RDR[8:0]**: Receive data value
Contains the received data character.
The RDR register provides the parallel interface between the input shift register and the internal bus (see *Figure 357*).
When receiving with the parity enabled, the value read in the MSB bit is the received parity bit.

36.7.9 Transmit data register (LPUART_TDR)

Address offset: 0x28

Reset value: Undefined

31	30	29	28	27	26	25	24	23	22	21	20	19	18	17	16
Res.	Res.	Res.	Res.	Res.	Res.	Res.	Res.	Res.	Res.	Res.	Res.	Res.	Res.	Res.	Res.

15	14	13	12	11	10	9	8	7	6	5	4	3	2	1	0
Res.	Res.	Res.	Res.	Res.	Res.	Res.	TDR[8:0]								
							rw	rw	rw	rw	rw	rw	rw	rw	rw

Bits 31:9 Reserved, must be kept at reset value.

Bits 8:0 **TDR[8:0]**: Transmit data value

Contains the data character to be transmitted.

The TDR register provides the parallel interface between the internal bus and the output shift register (see *Figure 357*).

When transmitting with the parity enabled (PCE bit set to 1 in the LPUART_CR1 register), the value written in the MSB (bit 7 or bit 8 depending on the data length) has no effect because it is replaced by the parity.

Note: This register must be written only when TXE=1.

36.7.10 LPUART register map

The table below gives the LPUART register map and reset values.

Table 169. LPUART register map and reset values

Offset	Register	31	30	29	28	27	26	25	24	23	22	21	20	19	18	17	16	15	14	13	12	11	10	9	8	7	6	5	4	3	2	1	0
0x00	LPUART_CR1	Res.	Res.	Res.	M1	Res.	Res.	DEAT4	DEAT3	DEAT2	DEAT1	DEAT0	DEDT4	DEDT3	DEDT2	DEDT1	DEDT0	Res.	CMIE	MME	M	WAKE	PCE	PS	PEIE	TXEIE	TCIE	RXNEIE	IDLEIE	TE	RE	UESM	UE
	Reset value				0			0	0	0	0	0	0	0	0	0	0		0	0	0	0	0	0	0	0	0	0	0	0	0	0	0
0x04	LPUART_CR2	ADD[7:4]				ADD[3:0]				Res.	Res.	Res.	Res.	MSBFIRST	DATAINV	TXINV	RXINV	SWAP	Res.	STOP [1:0]		Res.	Res.	Res.	Res.	Res.	Res.	Res.	ADDM7	Res.	Res.	Res.	Res.
	Reset value	0	0	0	0	0	0	0	0					0	0	0	0	0		0	0								0				
0x08	LPUART_CR3	Res.	Res.	Res.	Res.	Res.	Res.	Res.	Res.	UCESM	WUFIE	WUS [1:0]		Res.	Res.	Res.	Res.	DEP	DEM	DDRE	OVRDIS	Res.	CTSIE	CTSE	RTSE	DMAT	DMAR	Res.	Res.	HDSEL	Res.	Res.	EIE
	Reset value									0	0	0	0					0	0	0	0		0	0	0	0	0			0			0
0x0C	LPUART_BRR	Res.	Res.	Res.	Res.	Res.	Res.	Res.	Res.	Res.	Res.	Res.	Res.	BRR[19:0]																			
	Reset value																		0	0	0	0	0	0	0	0	0	0	0	0	0	0	0
0x10-0x14	Reserved																																
0x18	LPUART_RQR	Res.	Res.	Res.	Res.	Res.	Res.	Res.	Res.	Res.	Res.	Res.	Res.	Res.	Res.	Res.	Res.	Res.	Res.	Res.	Res.	Res.	Res.	Res.	Res.	Res.	Res.	Res.	Res.	RXFRQ	MMRQ	SBKRQ	Res.
	Reset value																													0	0	0	
0x1C	LPUART_ISR	Res.	Res.	Res.	Res.	Res.	Res.	Res.	Res.	Res.	REACK	TEACK	WUF	RWU	SBKF	CMF	BUSY	Res.	Res.	Res.	Res.	Res.	CTS	CTSIF	Res.	TXE	TC	RXNE	IDLE	ORE	NF	FE	PE
	Reset value										0	0	0	0	0	0	0						0	0		1	1	0	0	0	0	0	0
0x20	LPUART_ICR	Res.	Res.	Res.	Res.	Res.	Res.	Res.	Res.	Res.	Res.	Res.	WUCF	Res.	Res.	CMCF	Res.	Res.	Res.	Res.	Res.	Res.	Res.	CTSCF	Res.	Res.	TCCF	Res.	Res.	ORECF	NCF	FECF	PECF
	Reset value												0			0								0			0			0	0	0	0
0x24	LPUART_RDR	Res.	Res.	Res.	Res.	Res.	Res.	Res.	Res.	Res.	Res.	Res.	Res.	Res.	Res.	Res.	Res.	Res.	Res.	Res.	Res.	Res.	Res.	Res.	RDR[8:0]								
	Reset value																								X	X	X	X	X	X	X	X	X
0x28	LPUART_TDR	Res.	Res.	Res.	Res.	Res.	Res.	Res.	Res.	Res.	Res.	Res.	Res.	Res.	Res.	Res.	Res.	Res.	Res.	Res.	Res.	Res.	Res.	Res.	TDR[8:0]								
	Reset value																								X	X	X	X	X	X	X	X	X

Refer to *Section 2.2 on page 60* for the register boundary addresses.

37 Serial peripheral interface (SPI)

37.1 Introduction

The SPI interface can be used to communicate with external devices using the SPI protocol. SPI mode is selectable by software. SPI Motorola mode is selected by default after a device reset.

The serial peripheral interface (SPI) protocol supports half-duplex, full-duplex and simplex synchronous, serial communication with external devices. The interface can be configured as master and in this case it provides the communication clock (SCK) to the external slave device. The interface is also capable of operating in multimaster configuration.

37.2 SPI main features

- Master or slave operation
- Full-duplex synchronous transfers on three lines
- Half-duplex synchronous transfer on two lines (with bidirectional data line)
- Simplex synchronous transfers on two lines (with unidirectional data line)
- 4-bit to 16-bit data size selection
- Multimaster mode capability
- 8 master mode baud rate prescalers up to $f_{PCLK}/2$.
- Slave mode frequency up to $f_{PCLK}/2$.
- NSS management by hardware or software for both master and slave: dynamic change of master/slave operations
- Programmable clock polarity and phase
- Programmable data order with MSB-first or LSB-first shifting
- Dedicated transmission and reception flags with interrupt capability
- SPI bus busy status flag
- SPI Motorola support
- Hardware CRC feature for reliable communication:
  - CRC value can be transmitted as last byte in Tx mode
  - Automatic CRC error checking for last received byte
- Master mode fault, overrun flags with interrupt capability
- CRC Error flag
- Two 32-bit embedded Rx and Tx FIFOs with DMA capability
- SPI TI mode support

37.3 SPI implementation

This manual describes the full set of features implemented in SPI1, SPI2 and SPI3.

Table 170. STM32L431/433/443 SPI implementation

SPI Features[1]	SPI1	SPI2	SPI3
Hardware CRC calculation	X	X	X
Rx/Tx FIFO	X	X	X
NSS pulse mode	X	X	X
TI mode	X	X	X

1. X = supported.

37.4 SPI functional description

37.4.1 General description

The SPI allows synchronous, serial communication between the MCU and external devices. Application software can manage the communication by polling the status flag or using dedicated SPI interrupt. The main elements of SPI and their interactions are shown in the following block diagram *Figure 394*.

Figure 394. SPI block diagram

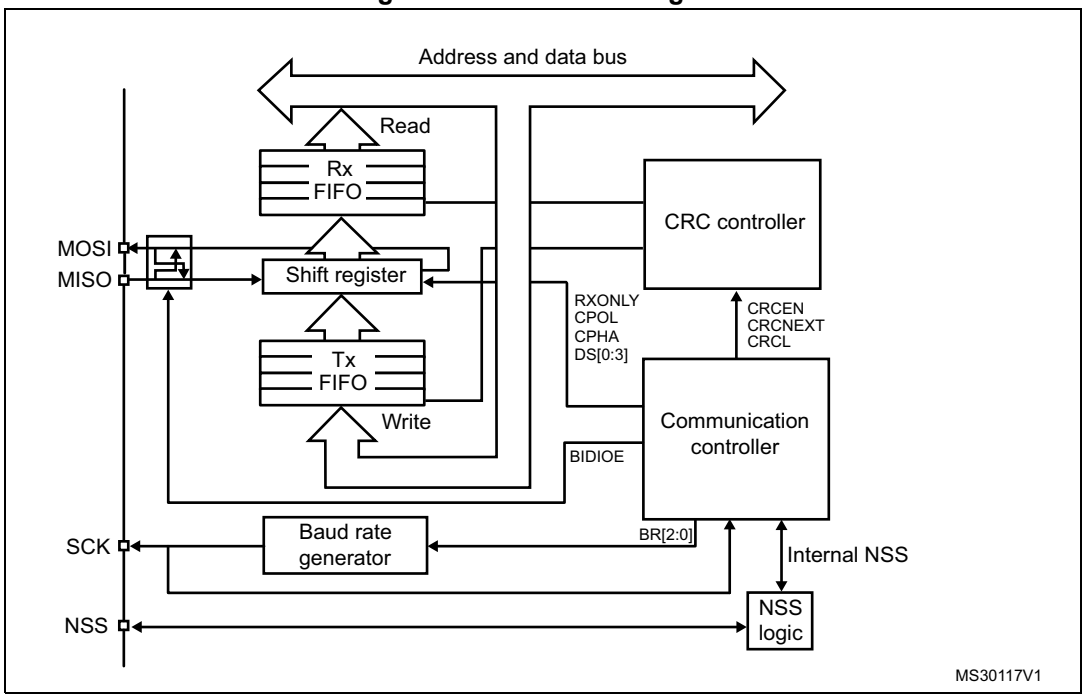

Four I/O pins are dedicated to SPI communication with external devices.

- **MISO:** Master In / Slave Out data. In the general case, this pin is used to transmit data in slave mode and receive data in master mode.
- **MOSI:** Master Out / Slave In data. In the general case, this pin is used to transmit data in master mode and receive data in slave mode.
- **SCK:** Serial Clock output pin for SPI masters and input pin for SPI slaves.
- **NSS:** Slave select pin. Depending on the SPI and NSS settings, this pin can be used to either:
  - select an individual slave device for communication
  - synchronize the data frame or
  - detect a conflict between multiple masters

  See *Section 37.4.5: Slave select (NSS) pin management* for details.

The SPI bus allows the communication between one master device and one or more slave devices. The bus consists of at least two wires - one for the clock signal and the other for synchronous data transfer. Other signals can be added depending on the data exchange between SPI nodes and their slave select signal management.

37.4.2 Communications between one master and one slave

The SPI allows the MCU to communicate using different configurations, depending on the device targeted and the application requirements. These configurations use 2 or 3 wires (with software NSS management) or 3 or 4 wires (with hardware NSS management). Communication is always initiated by the master.

Full-duplex communication

By default, the SPI is configured for full-duplex communication. In this configuration, the shift registers of the master and slave are linked using two unidirectional lines between the MOSI and the MISO pins. During SPI communication, data is shifted synchronously on the SCK clock edges provided by the master. The master transmits the data to be sent to the slave via the MOSI line and receives data from the slave via the MISO line. When the data frame transfer is complete (all the bits are shifted) the information between the master and slave is exchanged.

Figure 395. Full-duplex single master/ single slave application

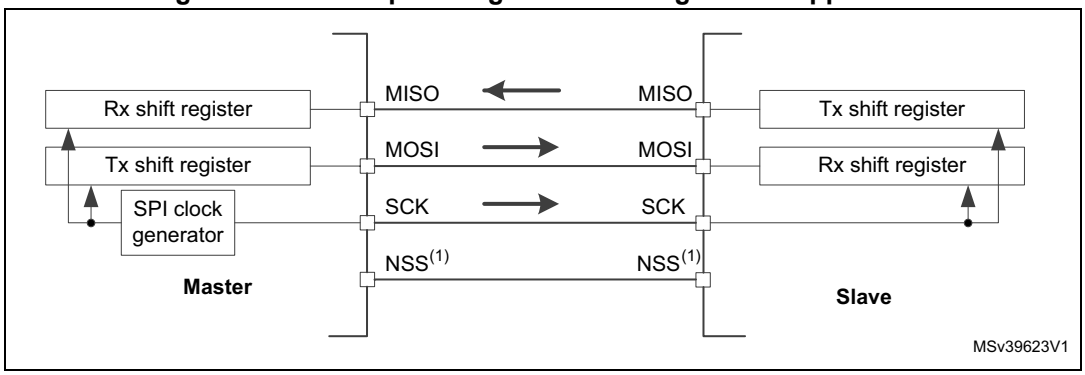

1. The NSS pins can be used to provide a hardware control flow between master and slave. Optionally, the pins can be left unused by the peripheral. Then the flow has to be handled internally for both master and slave. For more details see *Section 37.4.5: Slave select (NSS) pin management*.

Half-duplex communication

The SPI can communicate in half-duplex mode by setting the BIDIMODE bit in the SPIx_CR1 register. In this configuration, one single cross connection line is used to link the shift registers of the master and slave together. During this communication, the data is synchronously shifted between the shift registers on the SCK clock edge in the transfer direction selected reciprocally by both master and slave with the BDIOE bit in their SPIx_CR1 registers. In this configuration, the master's MISO pin and the slave's MOSI pin are free for other application uses and act as GPIOs.

Figure 396. Half-duplex single master/ single slave application

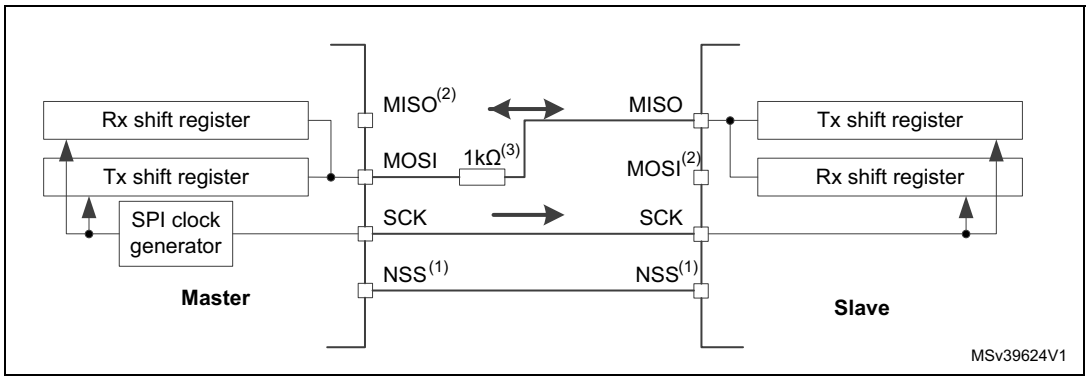

1. The NSS pins can be used to provide a hardware control flow between master and slave. Optionally, the pins can be left unused by the peripheral. Then the flow has to be handled internally for both master and slave. For more details see *Section 37.4.5: Slave select (NSS) pin management*.
2. In this configuration, the master's MISO pin and the slave's MOSI pin can be used as GPIOs.
3. A critical situation can happen when communication direction is changed not synchronously between two nodes working at bidirectionnal mode and new transmitter accesses the common data line while former transmitter still keeps an opposite value on the line (the value depends on SPI configuration and communication data). Both nodes then fight while providing opposite output levels on the common line temporary till next node changes its direction settings correspondingly, too. It is suggested to insert a serial resistance between MISO and MOSI pins at this mode to protect the outputs and limit the current blowing between them at this situation.

Simplex communications

The SPI can communicate in simplex mode by setting the SPI in transmit-only or in receive-only using the RXONLY bit in the SPIx_CR2 register. In this configuration, only one line is used for the transfer between the shift registers of the master and slave. The remaining MISO and MOSI pins pair is not used for communication and can be used as standard GPIOs.

- **Transmit-only mode (RXONLY=0):** The configuration settings are the same as for full-duplex. The application has to ignore the information captured on the unused input pin. This pin can be used as a standard GPIO.
- **Receive-only mode (RXONLY=1)**: The application can disable the SPI output function by setting the RXONLY bit. In slave configuration, the MISO output is disabled and the pin can be used as a GPIO. The slave continues to receive data from the MOSI pin while its slave select signal is active (see *37.4.4: Multi-master communication*). Received data events appear depending on the data buffer configuration. In the master configuration, the MOSI output is disabled and the pin can be used as a GPIO. The clock signal is generated continuously as long as the SPI is enabled. The only way to stop the clock is to clear the RXONLY bit or the SPE bit and wait until the incoming pattern from the MISO pin is finished and fills the data buffer structure, depending on its configuration.

Figure 397. Simplex single master/single slave application (master in transmit-only/ slave in receive-only mode)

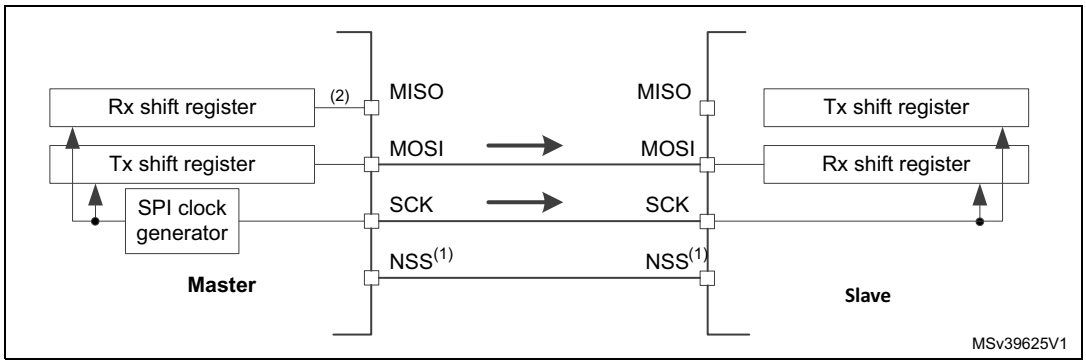

1. The NSS pins can be used to provide a hardware control flow between master and slave. Optionally, the pins can be left unused by the peripheral. Then the flow has to be handled internally for both master and slave. For more details see *Section 37.4.5: Slave select (NSS) pin management*.
2. An accidental input information is captured at the input of transmitter Rx shift register. All the events associated with the transmitter receive flow must be ignored in standard transmit only mode (e.g. OVF flag).
3. In this configuration, both the MISO pins can be used as GPIOs.

Note: Any simplex communication can be alternatively replaced by a variant of the half duplex communication with a constant setting of the transaction direction (bidirectional mode is enabled while BDIO bit is not changed).

37.4.3 Standard multi-slave communication

In a configuration with two or more independent slaves, the master uses GPIO pins to manage the chip select lines for each slave (see *Figure 398.*). The master must select one of the slaves individually by pulling low the GPIO connected to the slave NSS input. When this is done, a standard master and dedicated slave communication is established.

Figure 398. Master and three independent slaves

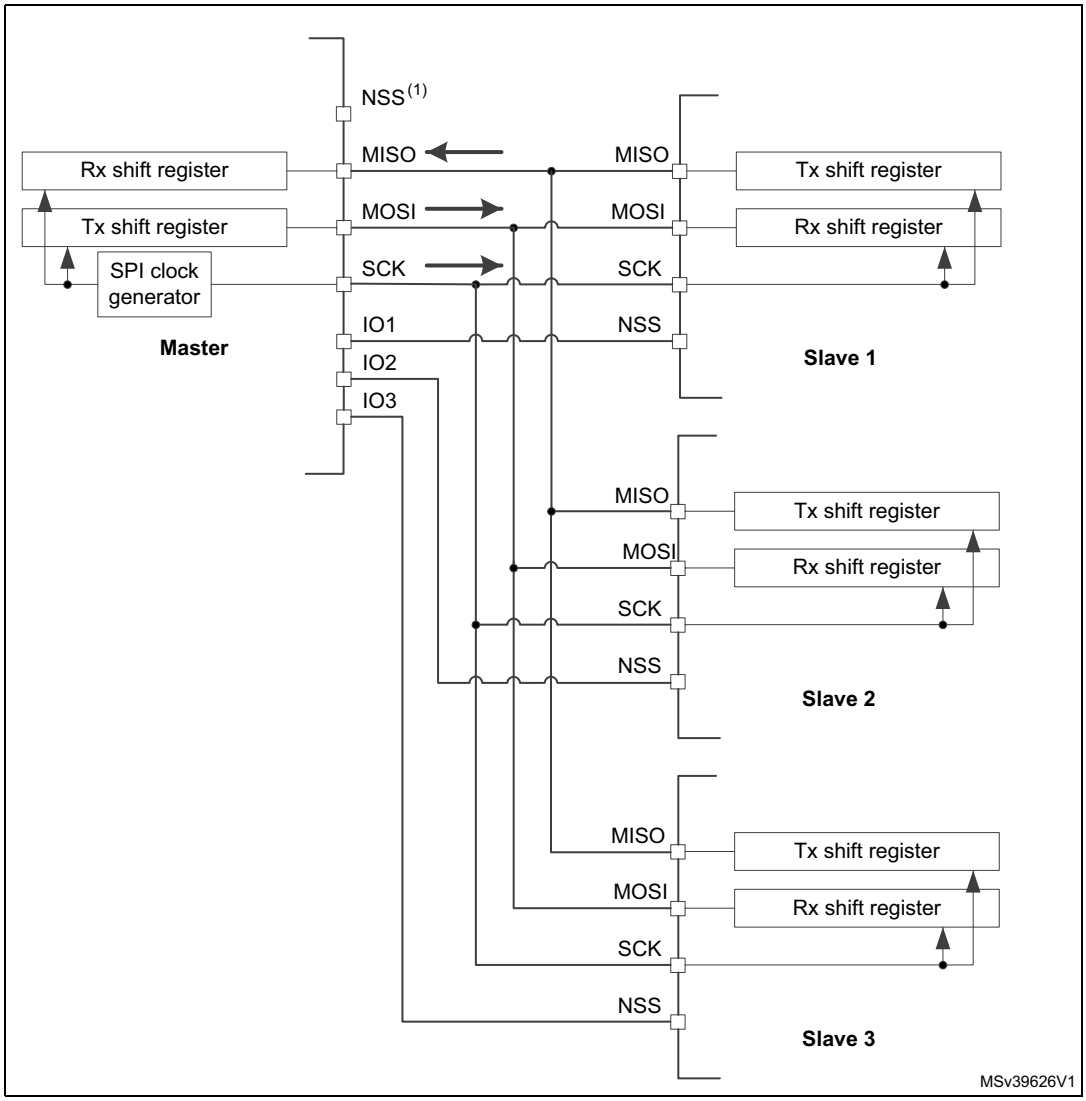

1. NSS pin is not used on master side at this configuration. It has to be managed internally (SSM=1, SSI=1) to prevent any MODF error.
2. As MISO pins of the slaves are connected together, all slaves must have the GPIO configuration of their MISO pin set as alternate function open-drain (see *Section 8.3.7: I/O alternate function input/output on page 249*.

37.4.4 Multi-master communication

Unless SPI bus is not designed for a multi-master capability primarily, the user can use build in feature which detects a potential conflict between two nodes trying to master the bus at the same time. For this detection, NSS pin is used configured at hardware input mode.

The connection of more than two SPI nodes working at this mode is impossible as only one node can apply its output on a common data line at time.

When nodes are non active, both stay at slave mode by default. Once one node wants to overtake control on the bus, it switches itself into master mode and applies active level on the slave select input of the other node via dedicated GPIO pin. After the session is

completed, the active slave select signal is released and the node mastering the bus temporary returns back to passive slave mode waiting for next session start.

If potentially both nodes raised their mastering request at the same time a bus conflict event appears (see mode fault MODF event). Then the user can apply some simple arbitration process (e.g. to postpone next attempt by predefined different time-outs applied at both nodes).

Figure 399. Multi-master application

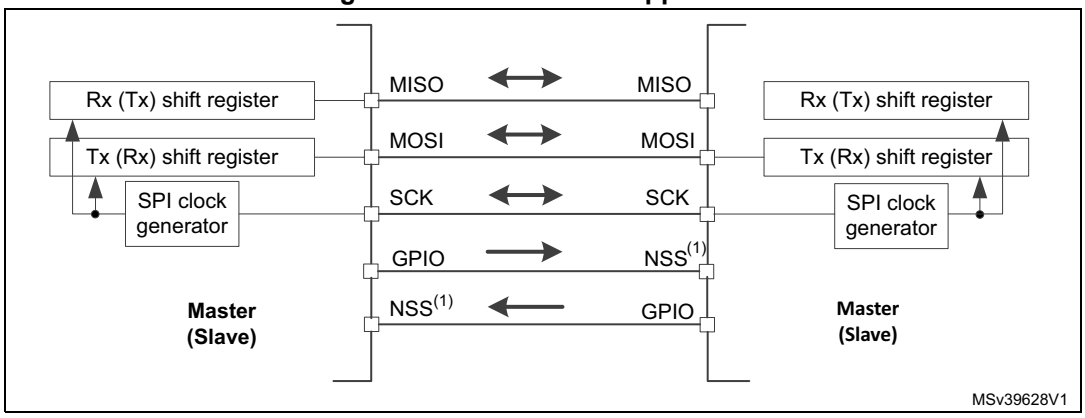

1. The NSS pin is configured at hardware input mode at both nodes. Its active level enables the MISO line output control as the passive node is configured as a slave.

37.4.5 Slave select (NSS) pin management

In slave mode, the NSS works as a standard “chip select” input and lets the slave communicate with the master. In master mode, NSS can be used either as output or input. As an input it can prevent multimaster bus collision, and as an output it can drive a slave select signal of a single slave.

Hardware or software slave select management can be set using the SSM bit in the SPIx_CR1 register:

- **Software NSS management (SSM = 1)**: in this configuration, slave select information is driven internally by the SSI bit value in register SPIx_CR1. The external NSS pin is free for other application uses.
- **Hardware NSS management (SSM = 0)**: in this case, there are two possible configurations. The configuration used depends on the NSS output configuration (SSOE bit in register SPIx_CR1).
  - **NSS output enable (SSM=0,SSOE = 1)**: this configuration is only used when the MCU is set as master. The NSS pin is managed by the hardware. The NSS signal is driven low as soon as the SPI is enabled in master mode (SPE=1), and is kept low until the SPI is disabled (SPE =0). A pulse can be generated between continuous communications if NSS pulse mode is activated (NSSP=1). The SPI cannot work in multimaster configuration with this NSS setting.
  - **NSS output disable (SSM=0, SSOE = 0)**: if the microcontroller is acting as the master on the bus, this configuration allows multimaster capability. If the NSS pin is pulled low in this mode, the SPI enters master mode fault state and the device is automatically reconfigured in slave mode. In slave mode, the NSS pin works as a standard “chip select” input and the slave is selected while NSS line is at low level.

Figure 400. Hardware/software slave select management

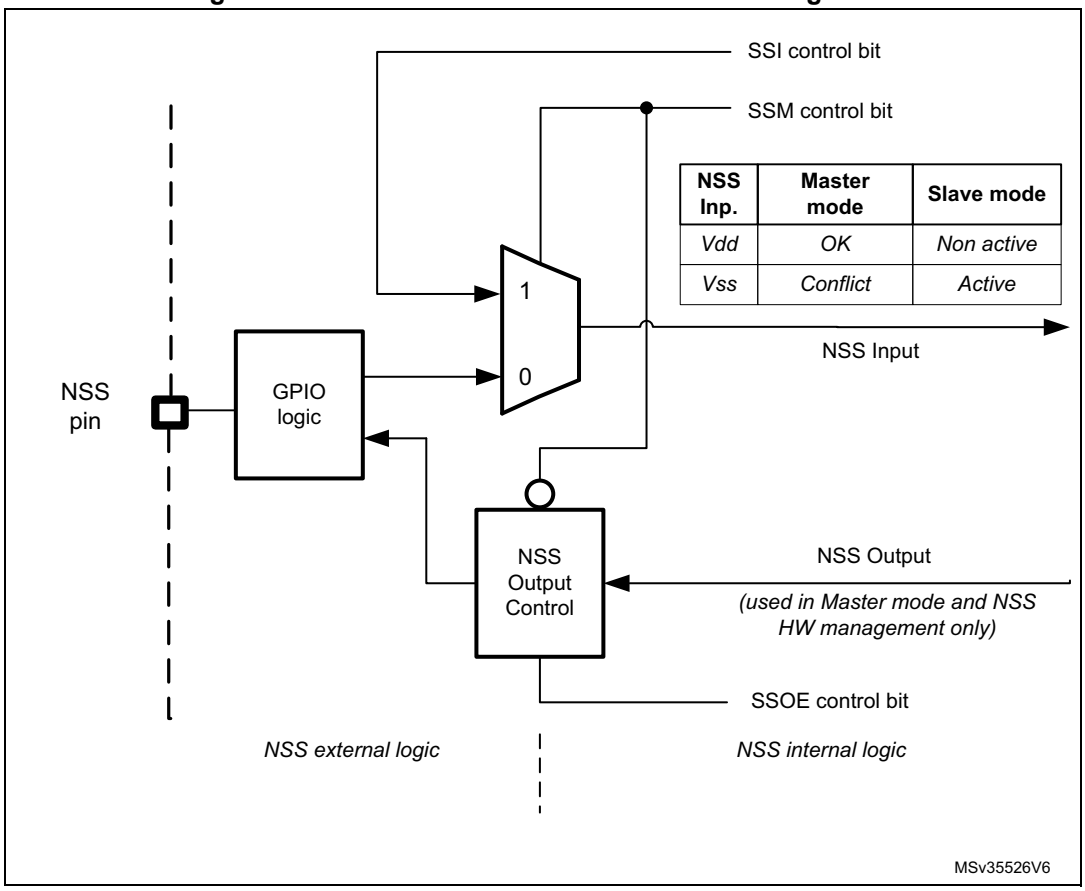

37.4.6 Communication formats

During SPI communication, receive and transmit operations are performed simultaneously. The serial clock (SCK) synchronizes the shifting and sampling of the information on the data lines. The communication format depends on the clock phase, the clock polarity and the data frame format. To be able to communicate together, the master and slaves devices must follow the same communication format.

Clock phase and polarity controls

Four possible timing relationships may be chosen by software, using the CPOL and CPHA bits in the SPIx_CR1 register. The CPOL (clock polarity) bit controls the idle state value of the clock when no data is being transferred. This bit affects both master and slave modes. If CPOL is reset, the SCK pin has a low-level idle state. If CPOL is set, the SCK pin has a high-level idle state.

If the CPHA bit is set, the second edge on the SCK pin captures the first data bit transacted (falling edge if the CPOL bit is reset, rising edge if the CPOL bit is set). Data are latched on each occurrence of this clock transition type. If the CPHA bit is reset, the first edge on the SCK pin captures the first data bit transacted (falling edge if the CPOL bit is set, rising edge if the CPOL bit is reset). Data are latched on each occurrence of this clock transition type.

The combination of CPOL (clock polarity) and CPHA (clock phase) bits selects the data capture clock edge.

Figure 401, shows an SPI full-duplex transfer with the four combinations of the CPHA and CPOL bits.

Note: Prior to changing the CPOL/CPHA bits the SPI must be disabled by resetting the SPE bit.

The idle state of SCK must correspond to the polarity selected in the SPIx_CR1 register (by pulling up SCK if CPOL=1 or pulling down SCK if CPOL=0).

Figure 401. Data clock timing diagram

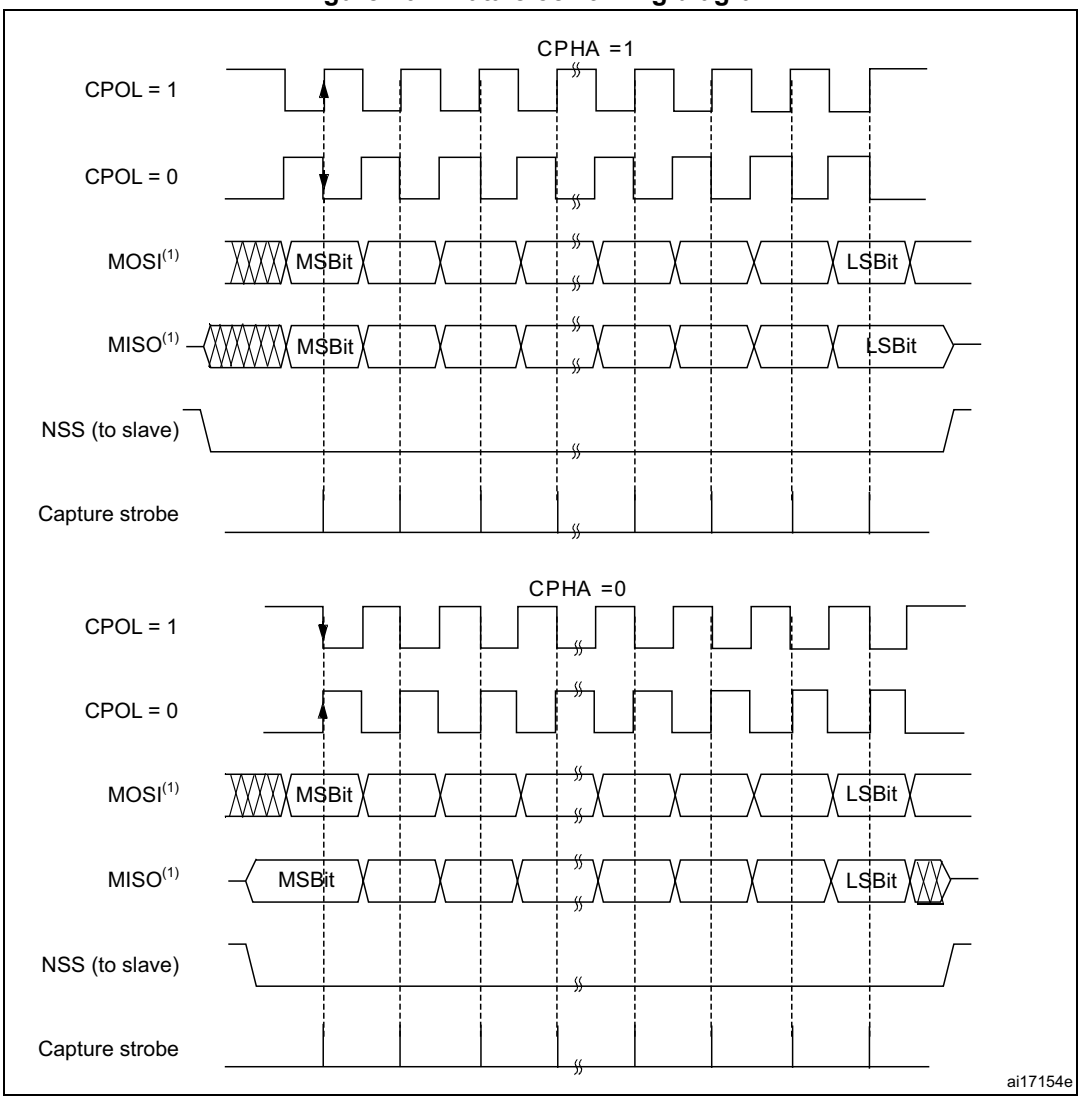

1. The order of data bits depends on LSBFIRST bit setting.

Data frame format

The SPI shift register can be set up to shift out MSB-first or LSB-first, depending on the value of the LSBFIRST bit. The data frame size is chosen by using the DS bits. It can be set from 4-bit up to 16-bit length and the setting applies for both transmission and reception. Whatever the selected data frame size, read access to the FIFO must be aligned with the FRXTH level. When the SPIx_DR register is accessed, data frames are always right-aligned into either a byte (if the data fits into a byte) or a half-word (see *Figure 402*). During communication, only bits within the data frame are clocked and transferred.

Figure 402. Data alignment when data length is not equal to 8-bit or 16-bit

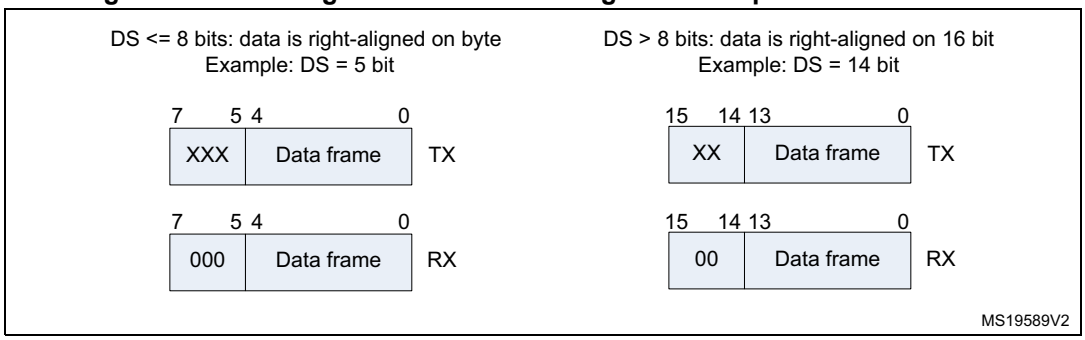

Note: The minimum data length is 4 bits. If a data length of less than 4 bits is selected, it is forced to an 8-bit data frame size.

37.4.7 Configuration of SPI

The configuration procedure is almost the same for master and slave. For specific mode setups, follow the dedicated sections. When a standard communication is to be initialized, perform these steps:

1. Write proper GPIO registers: Configure GPIO for MOSI, MISO and SCK pins.
2. Write to the SPI_CR1 register:
   a) Configure the serial clock baud rate using the BR[2:0] bits (Note: 4).
   b) Configure the CPOL and CPHA bits combination to define one of the four relationships between the data transfer and the serial clock (CPHA must be cleared in NSSP mode). (Note: 2).
   c) Select simplex or half-duplex mode by configuring RXONLY or BIDIMODE and BIDIOE (RXONLY and BIDIMODE can't be set at the same time).
   d) Configure the LSBFIRST bit to define the frame format (Note: 2).
   e) Configure the CRCL and CRCEN bits if CRC is needed (while SCK clock signal is at idle state).
   f) Configure SSM and SSI (Notes: 2 & 3).
   g) Configure the MSTR bit (in multimaster NSS configuration, avoid conflict state on NSS if master is configured to prevent MODF error).
3. Write to SPI_CR2 register:
   a) Configure the DS[3:0] bits to select the data length for the transfer.
   b) Configure SSOE (Notes: 1 & 2 & 3).
   c) Set the FRF bit if the TI protocol is required (keep NSSP bit cleared in TI mode).
   d) Set the NSSP bit if the NSS pulse mode between two data units is required (keep CHPA and TI bits cleared in NSSP mode).
   e) Configure the FRXTH bit. The RXFIFO threshold must be aligned to the read access size for the SPIx_DR register.
   f) Initialize LDMA_TX and LDMA_RX bits if DMA is used in packed mode.
4. Write to SPI_CRCPR register: Configure the CRC polynomial if needed.
5. Write proper DMA registers: Configure DMA streams dedicated for SPI Tx and Rx in DMA registers if the DMA streams are used.

Note: *(1) Step is not required in slave mode.*

(2) Step is not required in TI mode.

(3) Step is not required in NSSP mode.

(4) The step is not required in slave mode except slave working at TI mode

37.4.8 Procedure for enabling SPI

It is recommended to enable the SPI slave before the master sends the clock. If not, undesired data transmission might occur. The data register of the slave must already contain data to be sent before starting communication with the master (either on the first edge of the communication clock, or before the end of the ongoing communication if the clock signal is continuous). The SCK signal must be settled at an idle state level corresponding to the selected polarity before the SPI slave is enabled.

The master at full duplex (or in any transmit-only mode) starts to communicate when the SPI is enabled and TXFIFO is not empty, or with the next write to TXFIFO.

In any master receive only mode (RXONLY=1 or BIDIMODE=1 & BIDIOE=0), master starts to communicate and the clock starts running immediately after SPI is enabled.

For handling DMA, follow the dedicated section.

37.4.9 Data transmission and reception procedures

RXFIFO and TXFIFO

All SPI data transactions pass through the 32-bit embedded FIFOs. This enables the SPI to work in a continuous flow, and prevents overruns when the data frame size is short. Each direction has its own FIFO called TXFIFO and RXFIFO. These FIFOs are used in all SPI modes except for receiver-only mode (slave or master) with CRC calculation enabled (see *Section 37.4.14: CRC calculation*).

The handling of FIFOs depends on the data exchange mode (duplex, simplex), data frame format (number of bits in the frame), access size performed on the FIFO data registers (8-bit or 16-bit), and whether or not data packing is used when accessing the FIFOs (see *Section 37.4.13: TI mode*).

A read access to the SPIx_DR register returns the oldest value stored in RXFIFO that has not been read yet. A write access to the SPIx_DR stores the written data in the TXFIFO at the end of a send queue. The read access must be always aligned with the RXFIFO threshold configured by the FRXTH bit in SPIx_CR2 register. FTLVL[1:0] and FRLVL[1:0] bits indicate the current occupancy level of both FIFOs.

A read access to the SPIx_DR register must be managed by the RXNE event. This event is triggered when data is stored in RXFIFO and the threshold (defined by FRXTH bit) is reached. When RXNE is cleared, RXFIFO is considered to be empty. In a similar way, write access of a data frame to be transmitted is managed by the TXE event. This event is triggered when the TXFIFO level is less than or equal to half of its capacity. Otherwise TXE is cleared and the TXFIFO is considered as full. In this way, RXFIFO can store up to four data frames, whereas TXFIFO can only store up to three when the data frame format is not greater than 8 bits. This difference prevents possible corruption of 3x 8-bit data frames already stored in the TXFIFO when software tries to write more data in 16-bit mode into

TXFIFO. Both TXE and RXNE events can be polled or handled by interrupts. See *Figure 404* through *Figure 407*.

Another way to manage the data exchange is to use DMA (see *Section 11.2: DMA main features*).

If the next data is received when the RXFIFO is full, an overrun event occurs (see description of OVR flag at *Section 37.4.10: SPI status flags*). An overrun event can be polled or handled by an interrupt.

The BSY bit being set indicates ongoing transaction of a current data frame. When the clock signal runs continuously, the BSY flag stays set between data frames at master but becomes low for a minimum duration of one SPI clock at slave between each data frame transfer.

Sequence handling

A few data frames can be passed at single sequence to complete a message. When transmission is enabled, a sequence begins and continues while any data is present in the TXFIFO of the master. The clock signal is provided continuously by the master until TXFIFO becomes empty, then it stops waiting for additional data.

In receive-only modes, half duplex (BIDIMODE=1, BIDIOE=0) or simplex (BIDIMODE=0, RXONLY=1) the master starts the sequence immediately when both SPI is enabled and receive-only mode is activated. The clock signal is provided by the master and it does not stop until either SPI or receive-only mode is disabled by the master. The master receives data frames continuously up to this moment.

While the master can provide all the transactions in continuous mode (SCK signal is continuous) it has to respect slave capability to handle data flow and its content at anytime. When necessary, the master must slow down the communication and provide either a slower clock or separate frames or data sessions with sufficient delays. Be aware there is no underflow error signal for master or slave in SPI mode, and data from the slave is always transacted and processed by the master even if the slave could not prepare it correctly in time. It is preferable for the slave to use DMA, especially when data frames are shorter and bus rate is high.

Each sequence must be encased by the NSS pulse in parallel with the multislave system to select just one of the slaves for communication. In a single slave system it is not necessary to control the slave with NSS, but it is often better to provide the pulse here too, to synchronize the slave with the beginning of each data sequence. NSS can be managed by both software and hardware (see *Section 37.4.5: Slave select (NSS) pin management*).

When the BSY bit is set it signifies an ongoing data frame transaction. When the dedicated frame transaction is finished, the RXNE flag is raised. The last bit is just sampled and the complete data frame is stored in the RXFIFO.

Procedure for disabling the SPI

When SPI is disabled, it is mandatory to follow the disable procedures described in this paragraph. It is important to do this before the system enters a low-power mode when the peripheral clock is stopped. Ongoing transactions can be corrupted in this case. In some modes the disable procedure is the only way to stop continuous communication running.

Master in full duplex or transmit only mode can finish any transaction when it stops providing data for transmission. In this case, the clock stops after the last data transaction. Special care must be taken in packing mode when an odd number of data frames are transacted to

prevent some dummy byte exchange (refer to *Data packing* section). Before the SPI is disabled in these modes, the user must follow standard disable procedure. When the SPI is disabled at the master transmitter while a frame transaction is ongoing or next data frame is stored in TXFIFO, the SPI behavior is not guaranteed.

When the master is in any receive only mode, the only way to stop the continuous clock is to disable the peripheral by SPE=0. This must occur in specific time window within last data frame transaction just between the sampling time of its first bit and before its last bit transfer starts (in order to receive a complete number of expected data frames and to prevent any additional “dummy” data reading after the last valid data frame). Specific procedure must be followed when disabling SPI in this mode.

Data received but not read remains stored in RXFIFO when the SPI is disabled, and must be processed the next time the SPI is enabled, before starting a new sequence. To prevent having unread data, ensure that RXFIFO is empty when disabling the SPI, by using the correct disabling procedure, or by initializing all the SPI registers with a software reset via the control of a specific register dedicated to peripheral reset (see the SPIiRST bits in the RCC_APBiRSTR registers).

Standard disable procedure is based on pulling BSY status together with FTLVL[1:0] to check if a transmission session is fully completed. This check can be done in specific cases, too, when it is necessary to identify the end of ongoing transactions, for example:

- When NSS signal is managed by software and master has to provide proper end of NSS pulse for slave, or
- When transactions’ streams from DMA or FIFO are completed while the last data frame or CRC frame transaction is still ongoing in the peripheral bus.

The correct disable procedure is (except when receive only mode is used):

1. Wait until FTLVL[1:0] = 00 (no more data to transmit).
2. Wait until BSY=0 (the last data frame is processed).
3. Disable the SPI (SPE=0).
4. Read data until FRLVL[1:0] = 00 (read all the received data).

The correct disable procedure for certain receive only modes is:

1. Interrupt the receive flow by disabling SPI (SPE=0) in the specific time window while the last data frame is ongoing.
2. Wait until BSY=0 (the last data frame is processed).
3. Read data until FRLVL[1:0] = 00 (read all the received data).

Note: If packing mode is used and an odd number of data frames with a format less than or equal to 8 bits (fitting into one byte) has to be received, FRXTH must be set when FRLVL[1:0] = 01, in order to generate the RXNE event to read the last odd data frame and to keep good FIFO pointer alignment.

Data packing

When the data frame size fits into one byte (less than or equal to 8 bits), data packing is used automatically when any read or write 16-bit access is performed on the SPIx_DR register. The double data frame pattern is handled in parallel in this case. At first, the SPI operates using the pattern stored in the LSB of the accessed word, then with the other half stored in the MSB. *Figure 403* provides an example of data packing mode sequence handling. Two data frames are sent after the single 16-bit access the SPIx_DR register of the transmitter. This sequence can generate just one RXNE event in the receiver if the

RXFIFO threshold is set to 16 bits (FRXTH=0). The receiver then has to access both data frames by a single 16-bit read of SPIx_DR as a response to this single RXNE event. The RxFIFO threshold setting and the following read access must be always kept aligned at the receiver side, as data can be lost if it is not in line.

A specific problem appears if an odd number of such “fit into one byte” data frames must be handled. On the transmitter side, writing the last data frame of any odd sequence with an 8-bit access to SPIx_DR is enough. The receiver has to change the Rx_FIFO threshold level for the last data frame received in the odd sequence of frames in order to generate the RXNE event.

Figure 403. Packing data in FIFO for transmission and reception

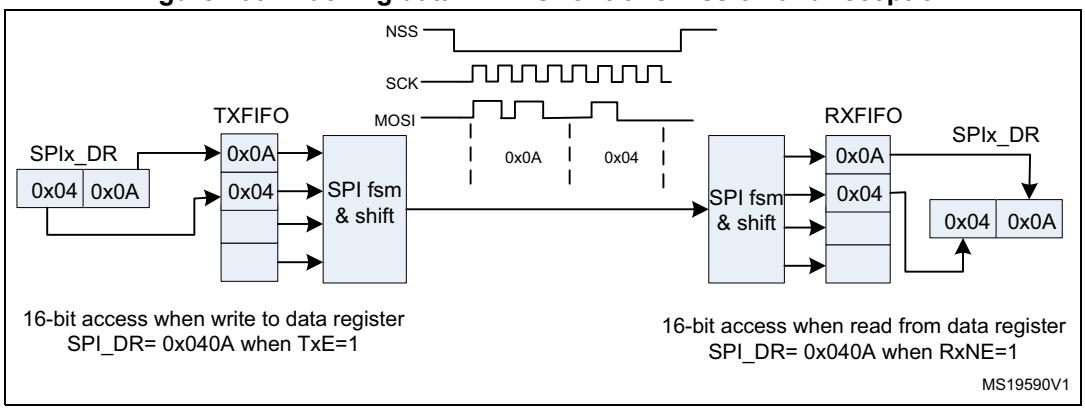

Communication using DMA (direct memory addressing)

To operate at its maximum speed and to facilitate the data register read/write process required to avoid overrun, the SPI features a DMA capability, which implements a simple request/acknowledge protocol.

A DMA access is requested when the TXE or RXNE enable bit in the SPIx_CR2 register is set. Separate requests must be issued to the Tx and Rx buffers.

- In transmission, a DMA request is issued each time TXE is set to 1. The DMA then writes to the SPIx_DR register.
- In reception, a DMA request is issued each time RXNE is set to 1. The DMA then reads the SPIx_DR register.

See *Figure 404* through *Figure 407*.

When the SPI is used only to transmit data, it is possible to enable only the SPI Tx DMA channel. In this case, the OVR flag is set because the data received is not read. When the SPI is used only to receive data, it is possible to enable only the SPI Rx DMA channel.

In transmission mode, when the DMA has written all the data to be transmitted (the TCIF flag is set in the DMA_ISR register), the BSY flag can be monitored to ensure that the SPI communication is complete. This is required to avoid corrupting the last transmission before disabling the SPI or entering the Stop mode. The software must first wait until FTLVL[1:0]=00 and then until BSY=0.

When starting communication using DMA, to prevent DMA channel management raising error events, these steps must be followed in order:

1. Enable DMA Rx buffer in the RXDMAEN bit in the SPI_CR2 register, if DMA Rx is used.
2. Enable DMA streams for Tx and Rx in DMA registers, if the streams are used.
3. Enable DMA Tx buffer in the TXDMAEN bit in the SPI_CR2 register, if DMA Tx is used.
4. Enable the SPI by setting the SPE bit.

To close communication it is mandatory to follow these steps in order:

1. Disable DMA streams for Tx and Rx in the DMA registers, if the streams are used.
2. Disable the SPI by following the SPI disable procedure.
3. Disable DMA Tx and Rx buffers by clearing the TXDMAEN and RXDMAEN bits in the SPI_CR2 register, if DMA Tx and/or DMA Rx are used.

Packing with DMA

If the transfers are managed by DMA (TXDMAEN and RXDMAEN set in the SPIx_CR2 register) packing mode is enabled/disabled automatically depending on the PSIZE value configured for SPI TX and the SPI RX DMA channel. If the DMA channel PSIZE value is equal to 16-bit and SPI data size is less than or equal to 8-bit, then packing mode is enabled. The DMA then automatically manages the write operations to the SPIx_DR register.

If data packing mode is used and the number of data to transfer is not a multiple of two, the LDMA_TX/LDMA_RX bits must be set. The SPI then considers only one data for the transmission or reception to serve the last DMA transfer (for more details refer to *Data packing on page 1155*.)

Communication diagrams

Some typical timing schemes are explained in this section. These schemes are valid no matter if the SPI events are handled by polling, interrupts or DMA. For simplicity, the LSBFIRST=0, CPOL=0 and CPHA=1 setting is used as a common assumption here. No complete configuration of DMA streams is provided.

The following numbered notes are common for *Figure 404 on page 1159* through *Figure 407 on page 1162*.

1. The slave starts to control MISO line as NSS is active and SPI is enabled, and is disconnected from the line when one of them is released. Sufficient time must be provided for the slave to prepare data dedicated to the master in advance before its transaction starts.
   At the master, the SPI peripheral takes control at MOSI and SCK signals (occasionally at NSS signal as well) only if SPI is enabled. If SPI is disabled the SPI peripheral is disconnected from GPIO logic, so the levels at these lines depends on GPIO setting exclusively.
2. At the master, BSY stays active between frames if the communication (clock signal) is continuous. At the slave, BSY signal always goes down for at least one clock cycle between data frames.
3. The TXE signal is cleared only if TXFIFO is full.
4. The DMA arbitration process starts just after the TXDMAEN bit is set. The TXE interrupt is generated just after the TXEIE is set. As the TXE signal is at an active level, data transfers to TxFIFO start, until TxFIFO becomes full or the DMA transfer completes.
5. If all the data to be sent can fit into TxFIFO, the DMA Tx TCIF flag can be raised even before communication on the SPI bus starts. This flag always rises before the SPI transaction is completed.
6. The CRC value for a package is calculated continuously frame by frame in the SPIx_TxCRCR and SPIx_RxCRCR registers. The CRC information is processed after the entire data package has completed, either automatically by DMA (Tx channel must be set to the number of data frames to be processed) or by SW (the user must handle CRCNEXT bit during the last data frame processing).
   While the CRC value calculated in SPIx_TxCRCR is simply sent out by transmitter, received CRC information is loaded into RxFIFO and then compared with the SPIx_RxCRCR register content (CRC error flag can be raised here if any difference). This is why the user must take care to flush this information from the FIFO, either by software reading out all the stored content of RxFIFO, or by DMA when the proper number of data frames is preset for Rx channel (number of data frames + number of CRC frames) (see the settings at the example assumption).
7. In data packed mode, TxE and RxNE events are paired and each read/write access to the FIFO is 16 bits wide until the number of data frames are even. If the TxFIFO is ¾ full FTLVL status stays at FIFO full level. That is why the last odd data frame cannot be stored before the TxFIFO becomes ½ full. This frame is stored into TxFIFO with an 8-bit access either by software or automatically by DMA when LDMA_TX control is set.
8. To receive the last odd data frame in packed mode, the Rx threshold must be changed to 8-bit when the last data frame is processed, either by software setting FRXTH=1 or automatically by a DMA internal signal when LDMA_RX is set.

Figure 404. Master full duplex communication

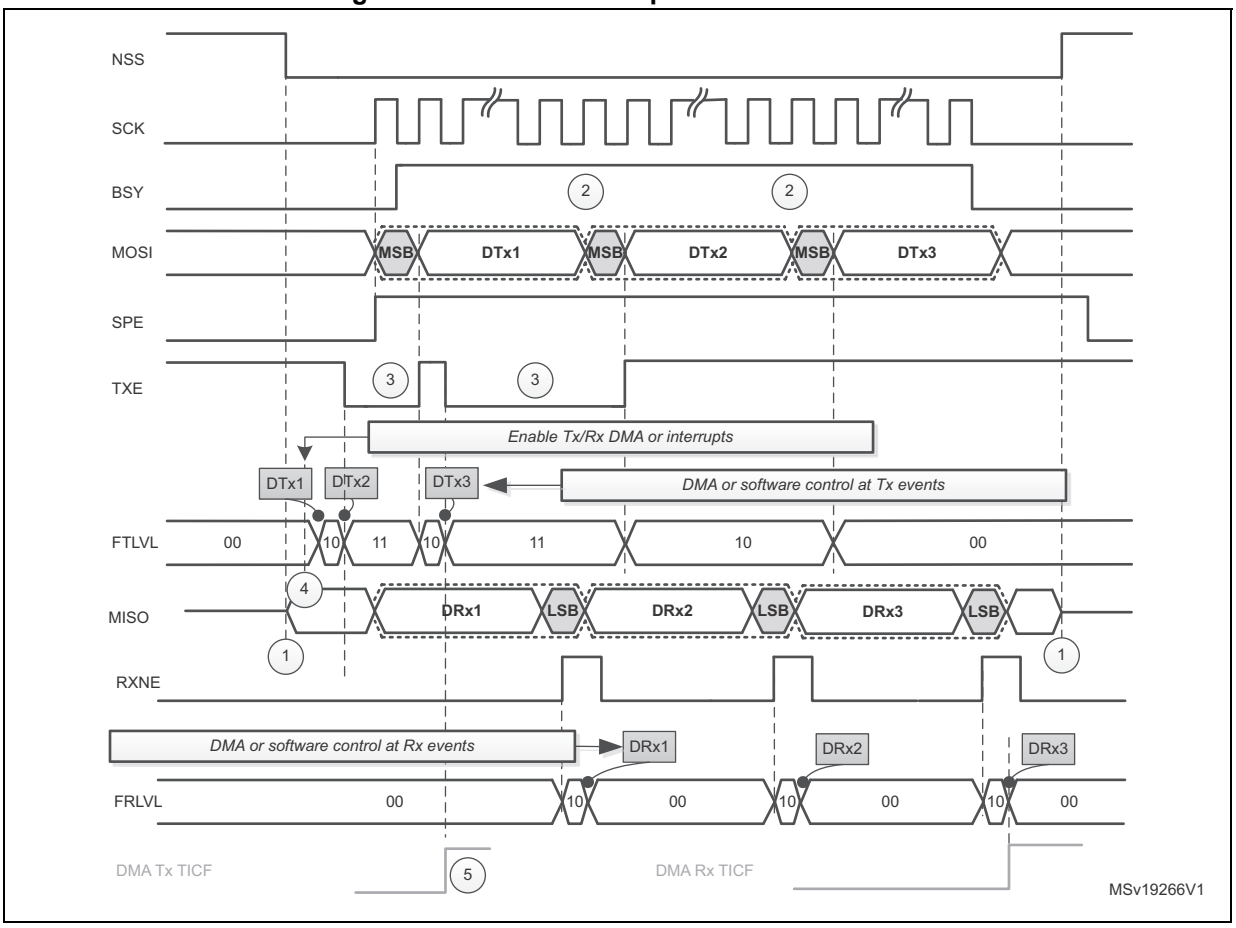

Assumptions for master full duplex communication example:

- Data size > 8 bit

If DMA is used:

- Number of Tx frames transacted by DMA is set to 3
- Number of Rx frames transacted by DMA is set to 3

See also *: Communication diagrams on page 1158* for details about common assumptions and notes.

Figure 405. Slave full duplex communication

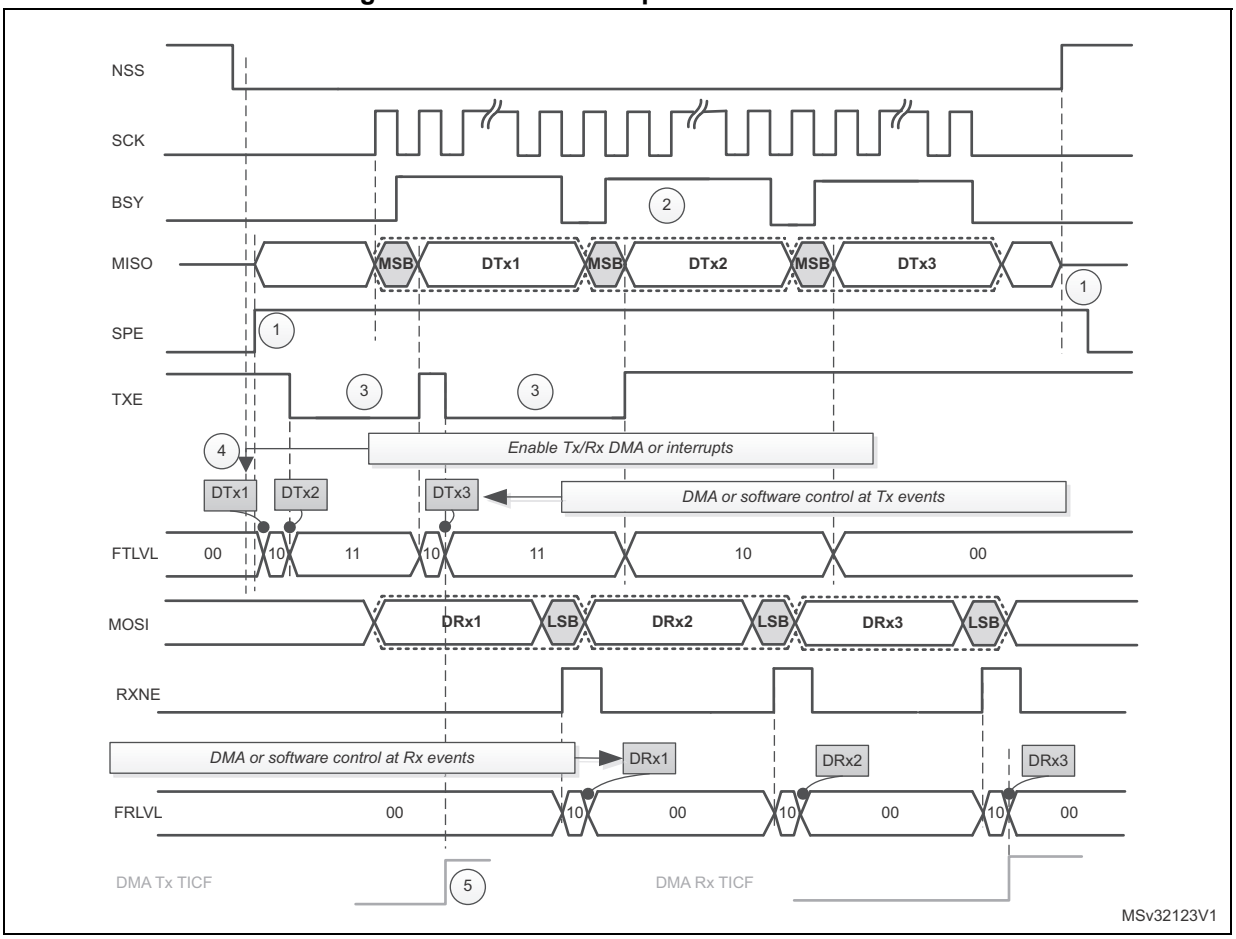

Assumptions for slave full duplex communication example:

- Data size > 8 bit

If DMA is used:

- Number of Tx frames transacted by DMA is set to 3
- Number of Rx frames transacted by DMA is set to 3

See also *: Communication diagrams on page 1158* for details about common assumptions and notes.

Figure 406. Master full duplex communication with CRC

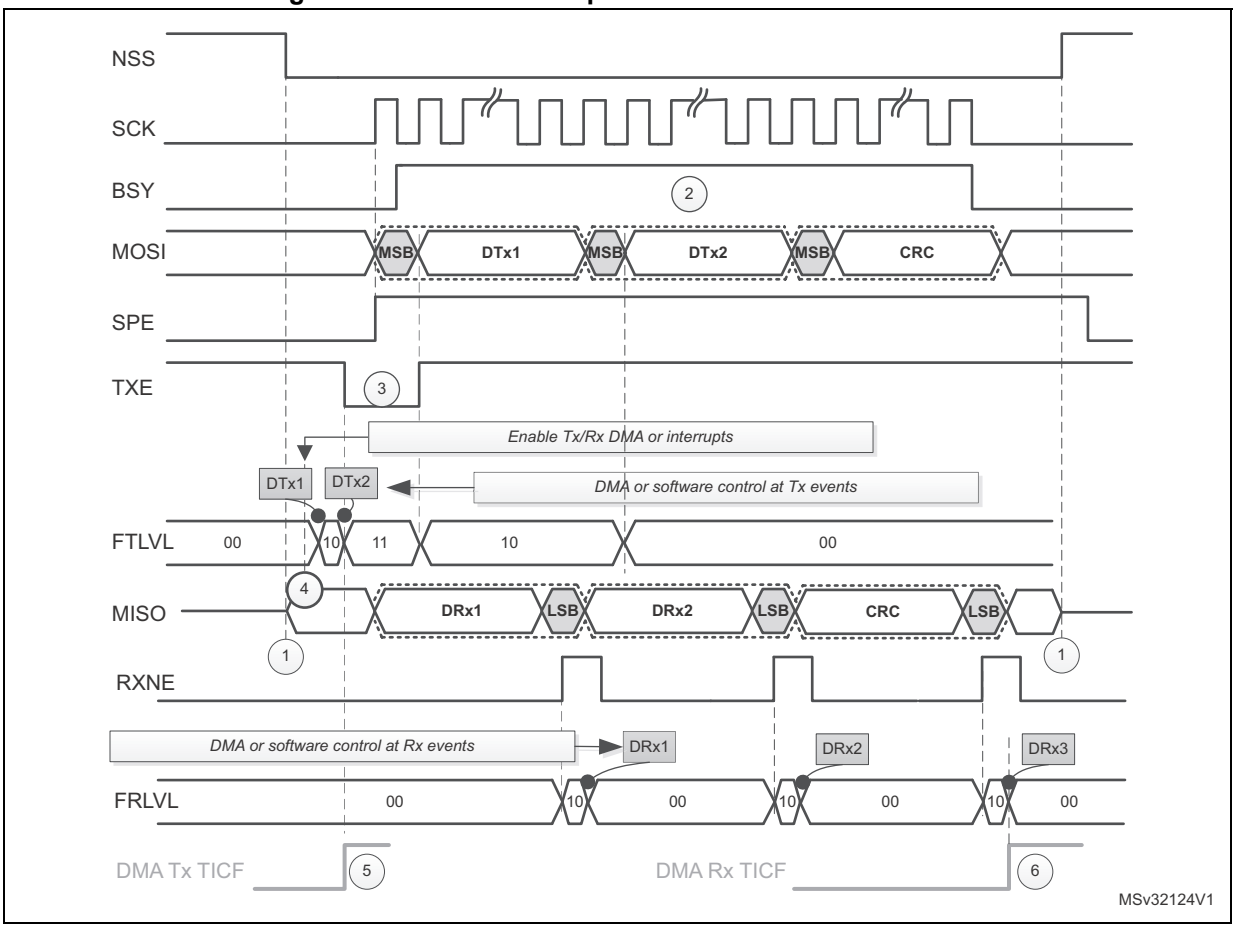

Assumptions for master full duplex communication with CRC example:

- Data size = 16 bit
- CRC enabled

If DMA is used:

- Number of Tx frames transacted by DMA is set to 2
- Number of Rx frames transacted by DMA is set to 3

See also *: Communication diagrams on page 1158* for details about common assumptions and notes.

Figure 407. Master full duplex communication in packed mode

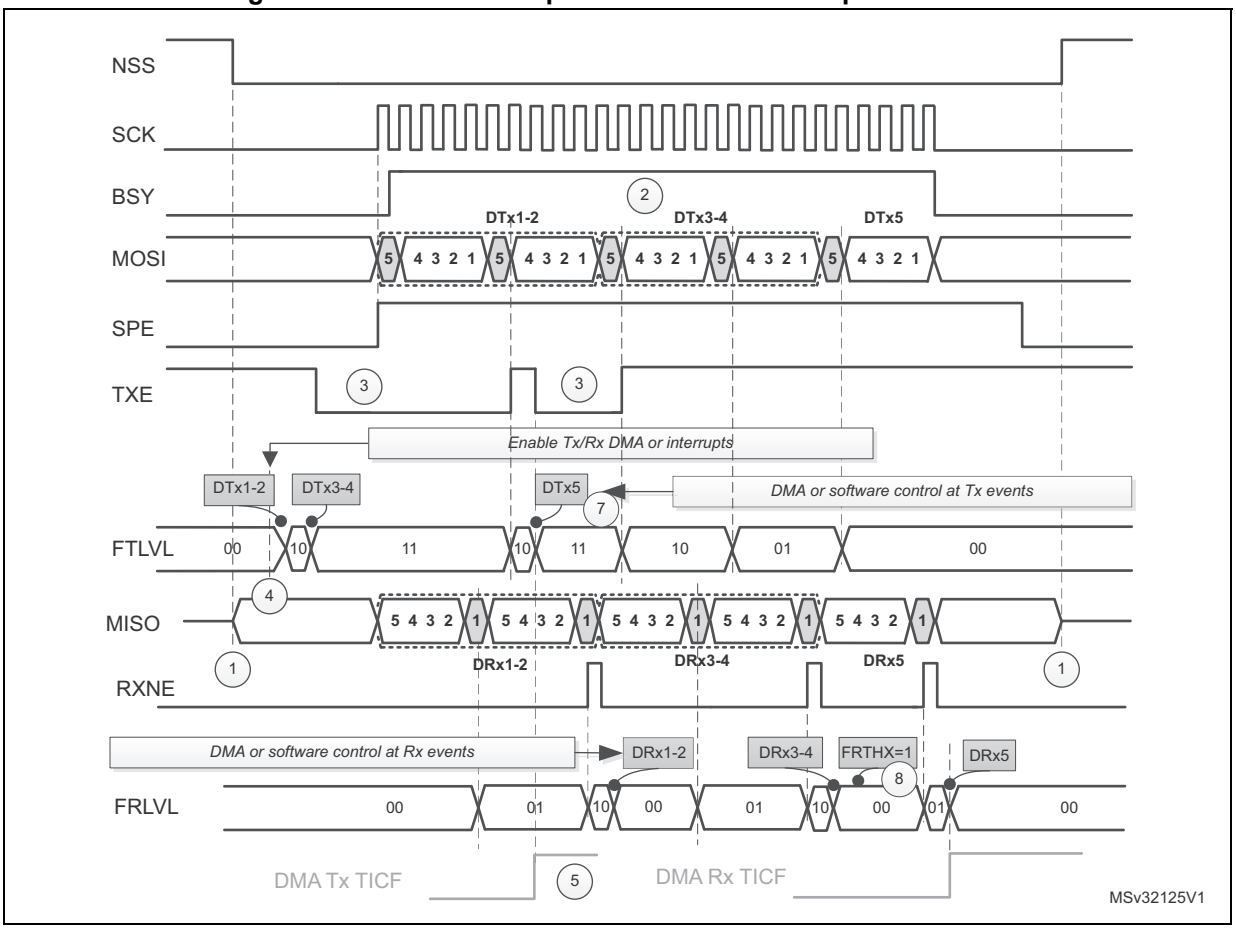

Assumptions for master full duplex communication in packed mode example:

- Data size = 5 bit
- Read/write FIFO is performed mostly by 16-bit access
- FRXTH=0

If DMA is used:

- Number of Tx frames to be transacted by DMA is set to 3
- Number of Rx frames to be transacted by DMA is set to 3
- PSIZE for both Tx and Rx DMA channel is set to 16-bit
- LDMA_TX=1 and LDMA_RX=1

See also : *Communication diagrams on page 1158* for details about common assumptions and notes.

37.4.10 SPI status flags

Three status flags are provided for the application to completely monitor the state of the SPI bus.

Tx buffer empty flag (TXE)

The TXE flag is set when transmission TXFIFO has enough space to store data to send. TXE flag is linked to the TXFIFO level. The flag goes high and stays high until the TXFIFO level is lower or equal to 1/2 of the FIFO depth. An interrupt can be generated if the TXEIE bit in the SPIx_CR2 register is set. The bit is cleared automatically when the TXFIFO level becomes greater than 1/2.

Rx buffer not empty (RXNE)

The RXNE flag is set depending on the FRXTH bit value in the SPIx_CR2 register:

- If FRXTH is set, RXNE goes high and stays high until the RXFIFO level is greater or equal to 1/4 (8-bit).
- If FRXTH is cleared, RXNE goes high and stays high until the RXFIFO level is greater than or equal to 1/2 (16-bit).

An interrupt can be generated if the RXNEIE bit in the SPIx_CR2 register is set.

The RXNE is cleared by hardware automatically when the above conditions are no longer true.

Busy flag (BSY)

The BSY flag is set and cleared by hardware (writing to this flag has no effect).

When BSY is set, it indicates that a data transfer is in progress on the SPI (the SPI bus is busy).

The BSY flag can be used in certain modes to detect the end of a transfer so that the software can disable the SPI or its peripheral clock before entering a low-power mode which does not provide a clock for the peripheral. This avoids corrupting the last transfer.

The BSY flag is also useful for preventing write collisions in a multimaster system.

The BSY flag is cleared under any one of the following conditions:

- When the SPI is correctly disabled
- When a fault is detected in Master mode (MODF bit set to 1)
- In Master mode, when it finishes a data transmission and no new data is ready to be sent
- In Slave mode, when the BSY flag is set to '0' for at least one SPI clock cycle between each data transfer.

Note: When the next transmission can be handled immediately by the master (e.g. if the master is in Receive-only mode or its Transmit FIFO is not empty), communication is continuous and the BSY flag remains set to '1' between transfers on the master side. Although this is not the case with a slave, it is recommended to use always the TXE and RXNE flags (instead of the BSY flags) to handle data transmission or reception operations.

37.4.11 SPI error flags

An SPI interrupt is generated if one of the following error flags is set and interrupt is enabled by setting the ERRIE bit.

Overrun flag (OVR)

An overrun condition occurs when data is received by a master or slave and the RXFIFO has not enough space to store this received data. This can happen if the software or the DMA did not have enough time to read the previously received data (stored in the RXFIFO) or when space for data storage is limited e.g. the RXFIFO is not available when CRC is enabled in receive only mode so in this case the reception buffer is limited into a single data frame buffer (see *Section 37.4.14: CRC calculation*).

When an overrun condition occurs, the newly received value does not overwrite the previous one in the RXFIFO. The newly received value is discarded and all data transmitted subsequently is lost. Clearing the OVR bit is done by a read access to the SPI_DR register followed by a read access to the SPI_SR register.

Mode fault (MODF)

Mode fault occurs when the master device has its internal NSS signal (NSS pin in NSS hardware mode, or SSI bit in NSS software mode) pulled low. This automatically sets the MODF bit. Master mode fault affects the SPI interface in the following ways:

- The MODF bit is set and an SPI interrupt is generated if the ERRIE bit is set.
- The SPE bit is cleared. This blocks all output from the device and disables the SPI interface.
- The MSTR bit is cleared, thus forcing the device into slave mode.

Use the following software sequence to clear the MODF bit:

1. Make a read or write access to the SPIx_SR register while the MODF bit is set.
2. Then write to the SPIx_CR1 register.

To avoid any multiple slave conflicts in a system comprising several MCUs, the NSS pin must be pulled high during the MODF bit clearing sequence. The SPE and MSTR bits can be restored to their original state after this clearing sequence. As a security, hardware does not allow the SPE and MSTR bits to be set while the MODF bit is set. In a slave device the MODF bit cannot be set except as the result of a previous multimaster conflict.

CRC error (CRCERR)

This flag is used to verify the validity of the value received when the CRCEN bit in the SPIx_CR1 register is set. The CRCERR flag in the SPIx_SR register is set if the value received in the shift register does not match the receiver SPIx_RXCRCR value. The flag is cleared by the software.

TI mode frame format error (FRE)

A TI mode frame format error is detected when an NSS pulse occurs during an ongoing communication when the SPI is operating in slave mode and configured to conform to the TI mode protocol. When this error occurs, the FRE flag is set in the SPIx_SR register. The SPI is not disabled when an error occurs, the NSS pulse is ignored, and the SPI waits for the next NSS pulse before starting a new transfer. The data may be corrupted since the error detection may result in the loss of two data bytes.

The FRE flag is cleared when SPIx_SR register is read. If the ERRIE bit is set, an interrupt is generated on the NSS error detection. In this case, the SPI should be disabled because data consistency is no longer guaranteed and communications should be reinitiated by the master when the slave SPI is enabled again.

37.4.12 NSS pulse mode

This mode is activated by the NSSP bit in the SPIx_CR2 register and it takes effect only if the SPI interface is configured as Motorola SPI master (FRF=0) with capture on the first edge (SPIx_CR1 CPHA = 0, CPOL setting is ignored). When activated, an NSS pulse is generated between two consecutive data frame transfers when NSS stays at high level for the duration of one clock period at least. This mode allows the slave to latch data. NSSP pulse mode is designed for applications with a single master-slave pair.

Figure 408 illustrates NSS pin management when NSSP pulse mode is enabled.

Figure 408. NSSP pulse generation in Motorola SPI master mode

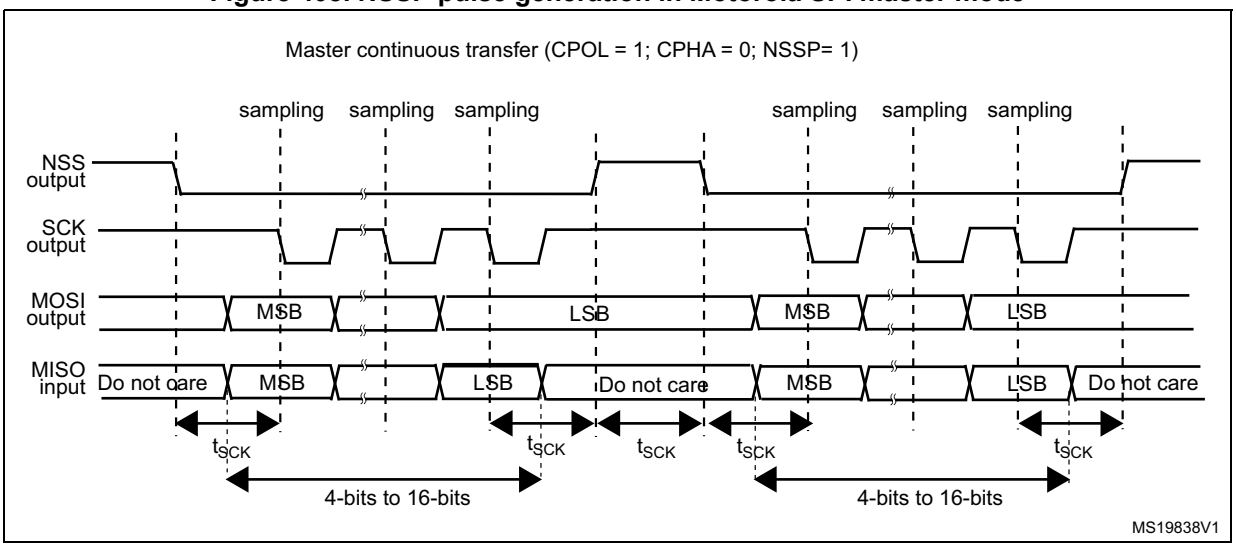

Note: Similar behavior is encountered when CPOL = 0. In this case the sampling edge is the *rising* edge of SCK, and NSS assertion and deassertion refer to this sampling edge.

37.4.13 TI mode

TI protocol in master mode

The SPI interface is compatible with the TI protocol. The FRF bit of the SPIx_CR2 register can be used to configure the SPI to be compliant with this protocol.

The clock polarity and phase are forced to conform to the TI protocol requirements whatever the values set in the SPIx_CR1 register. NSS management is also specific to the TI protocol which makes the configuration of NSS management through the SPIx_CR1 and SPIx_CR2 registers (SSM, SSI, SSOE) impossible in this case.

In slave mode, the SPI baud rate prescaler is used to control the moment when the MISO pin state changes to HiZ when the current transaction finishes (see *Figure 409*). Any baud rate can be used, making it possible to determine this moment with optimal flexibility. However, the baud rate is generally set to the external master clock baud rate. The delay for the MISO signal to become HiZ ($t_{release}$) depends on internal resynchronization and on the

baud rate value set in through the BR[2:0] bits in the SPIx_CR1 register. It is given by the formula:

$$\frac{t_{baud_rate}}{2} + 4 \times t_{pclk} < t_{release} < \frac{t_{baud_rate}}{2} + 6 \times t_{pclk}$$

If the slave detects a misplaced NSS pulse during a data frame transaction the TIFRE flag is set.

If the data size is equal to 4-bits or 5-bits, the master in full-duplex mode or transmit-only mode uses a protocol with one more dummy data bit added after LSB. TI NSS pulse is generated above this dummy bit clock cycle instead of the LSB in each period.

This feature is not available for Motorola SPI communications (FRF bit set to 0).

Figure 409: TI mode transfer shows the SPI communication waveforms when TI mode is selected.

Figure 409. TI mode transfer

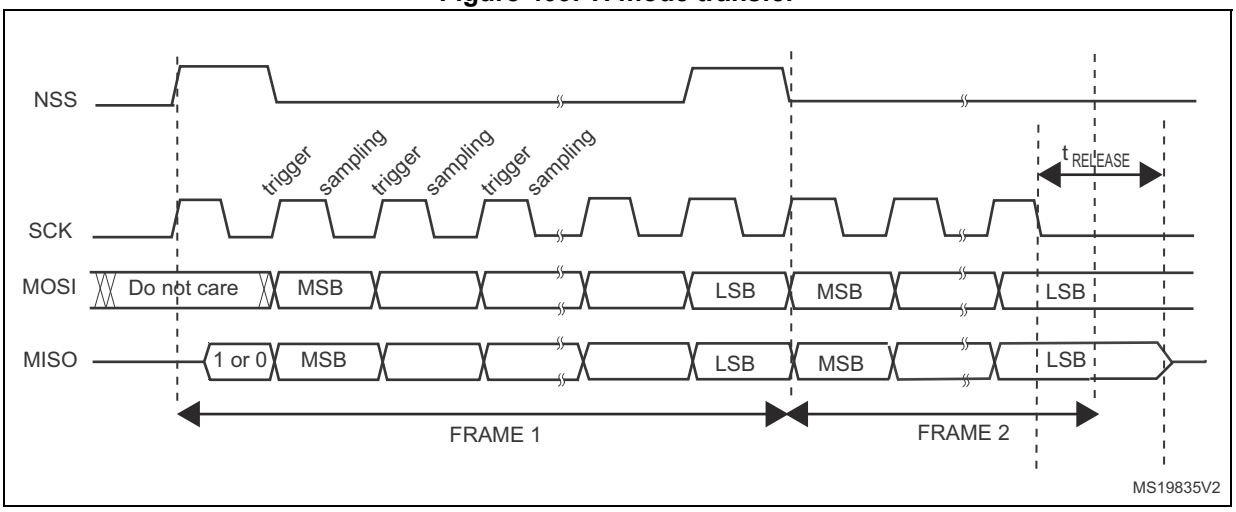

37.4.14 CRC calculation

Two separate CRC calculators are implemented in order to check the reliability of transmitted and received data. The SPI offers CRC8 or CRC16 calculation independently of the frame data length, which can be fixed to 8-bit or 16-bit. For all the other data frame lengths, no CRC is available.

CRC principle

CRC calculation is enabled by setting the CRCEN bit in the SPIx_CR1 register before the SPI is enabled (SPE = 1). The CRC value is calculated using an odd programmable polynomial on each bit. The calculation is processed on the sampling clock edge defined by the CPHA and CPOL bits in the SPIx_CR1 register. The calculated CRC value is checked automatically at the end of the data block as well as for transfer managed by CPU or by the DMA. When a mismatch is detected between the CRC calculated internally on the received data and the CRC sent by the transmitter, a CRCERR flag is set to indicate a data corruption error. The right procedure for handling the CRC calculation depends on the SPI configuration and the chosen transfer management.

Note: The polynomial value should only be odd. No even values are supported.

CRC transfer managed by CPU

Communication starts and continues normally until the last data frame has to be sent or received in the SPIx_DR register. Then CRCNEXT bit has to be set in the SPIx_CR1 register to indicate that the CRC frame transaction will follow after the transaction of the currently processed data frame. The CRCNEXT bit must be set before the end of the last data frame transaction. CRC calculation is frozen during CRC transaction.

The received CRC is stored in the RXFIFO like a data byte or word. That is why in CRC mode only, the reception buffer has to be considered as a single 16-bit buffer used to receive only one data frame at a time.

A CRC-format transaction usually takes one more data frame to communicate at the end of data sequence. However, when setting an 8-bit data frame checked by 16-bit CRC, two more frames are necessary to send the complete CRC.

When the last CRC data is received, an automatic check is performed comparing the received value and the value in the SPIx_RXCRC register. Software has to check the CRCERR flag in the SPIx_SR register to determine if the data transfers were corrupted or not. Software clears the CRCERR flag by writing '0' to it.

After the CRC reception, the CRC value is stored in the RXFIFO and must be read in the SPIx_DR register in order to clear the RXNE flag.

CRC transfer managed by DMA

When SPI communication is enabled with CRC communication and DMA mode, the transmission and reception of the CRC at the end of communication is automatic (with the exception of reading CRC data in receive only mode). The CRCNEXT bit does not have to be handled by the software. The counter for the SPI transmission DMA channel has to be set to the number of data frames to transmit excluding the CRC frame. On the receiver side, the received CRC value is handled automatically by DMA at the end of the transaction but user must take care to flush out received CRC information from RXFIFO as it is always loaded into it. In full duplex mode, the counter of the reception DMA channel can be set to the number of data frames to receive including the CRC, which means, for example, in the specific case of an 8-bit data frame checked by 16-bit CRC:

DMA_RX = Numb_of_data + 2

In receive only mode, the DMA reception channel counter should contain only the amount of data transferred, excluding the CRC calculation. Then based on the complete transfer from DMA, all the CRC values must be read back by software from FIFO as it works as a single buffer in this mode.

At the end of the data and CRC transfers, the CRCERR flag in the SPIx_SR register is set if corruption occurred during the transfer.

If packing mode is used, the LDMA_RX bit needs managing if the number of data is odd.

Resetting the SPIx_TXCRC and SPIx_RXCRC values

The SPIx_TXCRC and SPIx_RXCRC values are cleared automatically when new data is sampled after a CRC phase. This allows the use of DMA circular mode (not available in receive-only mode) in order to transfer data without any interruption, (several data blocks covered by intermediate CRC checking phases).

If the SPI is disabled during a communication the following sequence must be followed:

1. Disable the SPI
2. Clear the CRCEN bit
3. Enable the CRCEN bit
4. Enable the SPI

Note: When the SPI is in slave mode, the CRC calculator is sensitive to the SCK slave input clock as soon as the CRCEN bit is set, and this is the case whatever the value of the SPE bit. In order to avoid any wrong CRC calculation, the software must enable CRC calculation only when the clock is stable (in steady state). When the SPI interface is configured as a slave, the NSS internal signal needs to be kept low between the data phase and the CRC phase.

37.5 SPI interrupts

During SPI communication an interrupts can be generated by the following events:

- Transmit TXFIFO ready to be loaded
- Data received in Receive RXFIFO
- Master mode fault
- Overrun error
- TI frame format error
- CRC protocol error

Interrupts can be enabled and disabled separately.

Table 171. SPI interrupt requests

Interrupt event	Event flag	Enable Control bit
Transmit TXFIFO ready to be loaded	TXE	TXEIE
Data received in RXFIFO	RXNE	RXNEIE
Master Mode fault event	MODF	ERRIE
Overrun error	OVR	
TI frame format error	FRE	
CRC protocol error	CRCERR	

37.6 SPI registers

The peripheral registers can be accessed by half-words (16-bit) or words (32-bit). SPI_DR in addition by can be accessed by 8-bit access.

37.6.1 SPI control register 1 (SPIx_CR1)

Address offset: 0x00

Reset value: 0x0000

15	14	13	12	11	10	9	8	7	6	5	4	3	2	1	0
BIDI MODE	BIDI OE	CRC EN	CRC NEXT	CRCL	RX ONLY	SSM	SSI	LSB FIRST	SPE	BR [2:0]			MSTR	CPOL	CPHA
rw	rw	rw	rw	rw	rw	rw	rw	rw	rw	rw	rw	rw	rw	rw	rw

Bit 15 **BIDIMODE:** Bidirectional data mode enable. This bit enables half-duplex communication using common single bidirectional data line. Keep RXONLY bit clear when bidirectional mode is active.

0: 2-line unidirectional data mode selected

1: 1-line bidirectional data mode selected

Bit 14 **BIDIOE:** Output enable in bidirectional mode

This bit combined with the BIDIMODE bit selects the direction of transfer in bidirectional mode

0: Output disabled (receive-only mode)

1: Output enabled (transmit-only mode)

Note: In master mode, the MOSI pin is used and in slave mode, the MISO pin is used.

Bit 13 **CRCEN:** Hardware CRC calculation enable

0: CRC calculation disabled

1: CRC calculation Enabled

Note: This bit should be written only when SPI is disabled (SPE = '0') for correct operation.

Bit 12 **CRCNEXT:** Transmit CRC next

0: Next transmit value is from Tx buffer

1: Next transmit value is from Tx CRC register

Note: This bit has to be written as soon as the last data is written in the SPIx_DR register.

Bit 11 **CRCL:** CRC length

This bit is set and cleared by software to select the CRC length.

0: 8-bit CRC length

1: 16-bit CRC length

Note: This bit should be written only when SPI is disabled (SPE = '0') for correct operation.

Bit 10 **RXONLY:** Receive only mode enabled.

This bit enables simplex communication using a single unidirectional line to receive data exclusively. Keep BIDIMODE bit clear when receive only mode is active.This bit is also useful in a multislave system in which this particular slave is not accessed, the output from the accessed slave is not corrupted.

0: Full duplex (Transmit and receive)
1: Output disabled (Receive-only mode)

Bit 9 **SSM:** Software slave management

When the SSM bit is set, the NSS pin input is replaced with the value from the SSI bit.

0: Software slave management disabled
1: Software slave management enabled

Note: This bit is not used in SPI TI mode.

Bit 8 **SSI:** Internal slave select

This bit has an effect only when the SSM bit is set. The value of this bit is forced onto the NSS pin and the I/O value of the NSS pin is ignored.

Note: This bit is not used in SPI TI mode.

Bit 7 **LSBFIRST***:* Frame format

0: data is transmitted / received with the MSB first
1: data is transmitted / received with the LSB first

Note: 1. This bit should not be changed when communication is ongoing.
2. This bit is not used in SPI TI mode.

Bit 6 **SPE:** SPI enable

0: Peripheral disabled
1: Peripheral enabled

Note: When disabling the SPI, follow the procedure described in *Procedure for disabling the SPI on page 1154.*

Bits 5:3 **BR[2:0]:** Baud rate control

000: $f_{PCLK}/2$
001: $f_{PCLK}/4$
010: $f_{PCLK}/8$
011: $f_{PCLK}/16$
100: $f_{PCLK}/32$
101: $f_{PCLK}/64$
110: $f_{PCLK}/128$
111: $f_{PCLK}/256$

Note: These bits should not be changed when communication is ongoing.

Bit 2 **MSTR:** Master selection
0: Slave configuration
1: Master configuration
Note: This bit should not be changed when communication is ongoing.

Bit1 **CPOL:** Clock polarity
0: CK to 0 when idle
1: CK to 1 when idle
Note: This bit should not be changed when communication is ongoing.
This bit is not used in SPI TI mode.

Bit 0 **CPHA:** Clock phase
0: The first clock transition is the first data capture edge
1: The second clock transition is the first data capture edge
Note: This bit should not be changed when communication is ongoing.
This bit is not used in SPI TI mode.

37.6.2 SPI control register 2 (SPIx_CR2)

Address offset: 0x04

Reset value: 0x0700

15	14	13	12	11	10	9	8	7	6	5	4	3	2	1	0
Res.	LDMA_TX	LDMA_RX	FRXTH	DS [3:0]				TXEIE	RXNEIE	ERRIE	FRF	NSSP	SSOE	TXDMAEN	RXDMAEN
	rw	rw	rw	rw	rw	rw	rw	rw	rw	rw	rw	rw	rw	rw	rw

Bit 15 Reserved, must be kept at reset value.

Bit 14 **LDMA_TX:** Last DMA transfer for transmission
This bit is used in data packing mode, to define if the total number of data to transmit by DMA is odd or even. It has significance only if the TXDMAEN bit in the SPIx_CR2 register is set and if packing mode is used (data length =< 8-bit and write access to SPIx_DR is 16-bit wide). It has to be written when the SPI is disabled (SPE = 0 in the SPIx_CR1 register).
0: Number of data to transfer is even
1: Number of data to transfer is odd
Note: Refer to Procedure for disabling the SPI on page 1154 if the CRCEN bit is set.

Bit 13 **LDMA_RX**: Last DMA transfer for reception
This bit is used in data packing mode, to define if the total number of data to receive by DMA is odd or even. It has significance only if the RXDMAEN bit in the SPIx_CR2 register is set and if packing mode is used (data length =< 8-bit and write access to SPIx_DR is 16-bit wide). It has to be written when the SPI is disabled (SPE = 0 in the SPIx_CR1 register).
0: Number of data to transfer is even
1: Number of data to transfer is odd
Note: Refer to Procedure for disabling the SPI on page 1154 if the CRCEN bit is set.

Bit 12 **FRXTH**: FIFO reception threshold
This bit is used to set the threshold of the RXFIFO that triggers an RXNE event
0: RXNE event is generated if the FIFO level is greater than or equal to 1/2 (16-bit)
1: RXNE event is generated if the FIFO level is greater than or equal to 1/4 (8-bit)

Bits 11:8 **DS [3:0]**: Data size

These bits configure the data length for SPI transfers:

0000: Not used
0001: Not used
0010: Not used
0011: 4-bit
0100: 5-bit
0101: 6-bit
0110: 7-bit
0111: 8-bit
1000: 9-bit
1001: 10-bit
1010: 11-bit
1011: 12-bit
1100: 13-bit
1101: 14-bit
1110: 15-bit
1111: 16-bit

If software attempts to write one of the “Not used” values, they are forced to the value “0111”(8-bit).

Bit 7 **TXEIE:** Tx buffer empty interrupt enable

0: TXE interrupt masked
1: TXE interrupt not masked. Used to generate an interrupt request when the TXE flag is set.

Bit 6 **RXNEIE:** RX buffer not empty interrupt enable

0: RXNE interrupt masked
1: RXNE interrupt not masked. Used to generate an interrupt request when the RXNE flag is set.

Bit 5 **ERRIE:** Error interrupt enable

This bit controls the generation of an interrupt when an error condition occurs (CRCERR, OVR, MODF in SPI mode, FRE at TI mode).

0: Error interrupt is masked
1: Error interrupt is enabled

Bit 4 **FRF**: Frame format

0: SPI Motorola mode
1 SPI TI mode

Note: This bit must be written only when the SPI is disabled (SPE=0).

Bit 3 **NSSP**: NSS pulse management

This bit is used in master mode only. it allow the SPI to generate an NSS pulse between two consecutive data when doing continuous transfers. In the case of a single data transfer, it forces the NSS pin high level after the transfer.

It has no meaning if CPHA = ’1’, or FRF = ’1’.

0: No NSS pulse
1: NSS pulse generated

Note: 1. This bit must be written only when the SPI is disabled (SPE=0).
2. This bit is not used in SPI TI mode.

Bit 2 **SSOE:** SS output enable

0: SS output is disabled in master mode and the SPI interface can work in multimaster configuration

1: SS output is enabled in master mode and when the SPI interface is enabled. The SPI interface cannot work in a multimaster environment.

Note: This bit is not used in SPI TI mode.

Bit 1 **TXDMAEN:** Tx buffer DMA enable

When this bit is set, a DMA request is generated whenever the TXE flag is set.

0: Tx buffer DMA disabled

1: Tx buffer DMA enabled

Bit 0 **RXDMAEN:** Rx buffer DMA enable

When this bit is set, a DMA request is generated whenever the RXNE flag is set.

0: Rx buffer DMA disabled

1: Rx buffer DMA enabled

37.6.3 SPI status register (SPIx_SR)

Address offset: 0x08

Reset value: 0x0002

15	14	13	12	11	10	9	8	7	6	5	4	3	2	1	0
Res.	Res.	Res.	FTLVL[1:0]		FRLVL[2:0]		FRE	BSY	OVR	MODF	CRC ERR	Res.	Res.	TXE	RXNE
			r	r	r	r	r	r	r	r	rc_w0			r	r

Bits 15:13 Reserved, must be kept at reset value.

Bits 12:11 **FTLVL[1:0]:** FIFO Transmission Level

These bits are set and cleared by hardware.

00: FIFO empty

01: 1/4 FIFO

10: 1/2 FIFO

11: FIFO full (considered as FULL when the FIFO threshold is greater than 1/2)

Bits 10:9 **FRLVL[1:0]**: FIFO reception level

These bits are set and cleared by hardware.

00: FIFO empty

01: 1/4 FIFO

10: 1/2 FIFO

11: FIFO full

Note: These bits are not used in SPI receive-only mode while CRC calculation is enabled.

Bit 8 **FRE**: Frame format error

This flag is used for SPI in TI slave mode. Refer to *Section 37.4.11: SPI error flags*.

This flag is set by hardware and reset when SPIx_SR is read by software.

0: No frame format error

1: A frame format error occurred

Bit 7 **BSY:** Busy flag

0: SPI not busy
1: SPI is busy in communication or Tx buffer is not empty
This flag is set and cleared by hardware.

Note: The BSY flag must be used with caution: refer to Section 37.4.10: SPI status flags and Procedure for disabling the SPI on page 1154.

Bit 6 **OVR:** Overrun flag

0: No overrun occurred
1: Overrun occurred
This flag is set by hardware and reset by a software sequence.

Bit 5 **MODF:** Mode fault

0: No mode fault occurred
1: Mode fault occurred
This flag is set by hardware and reset by a software sequence. Refer to *Section : Mode fault (MODF) on page 1164* for the software sequence.

Bit 4 **CRCERR:** CRC error flag

0: CRC value received matches the SPIx_RXCRCR value
1: CRC value received does not match the SPIx_RXCRCR value
This flag is set by hardware and cleared by software writing 0.

Bits 3:2 Reserved, must be kept at reset value.

Bit 1 **TXE:** Transmit buffer empty

0: Tx buffer not empty
1: Tx buffer empty

Bit 0 **RXNE:** Receive buffer not empty

0: Rx buffer empty
1: Rx buffer not empty

37.6.4 SPI data register (SPIx_DR)

Address offset: 0x0C

Reset value: 0x0000

15	14	13	12	11	10	9	8	7	6	5	4	3	2	1	0
DR[15:0]															
rw	rw	rw	rw	rw	rw	rw	rw	rw	rw	rw	rw	rw	rw	rw	rw

Bits 15:0 **DR[15:0]:** Data register

Data received or to be transmitted

The data register serves as an interface between the Rx and Tx FIFOs. When the data register is read, RxFIFO is accessed while the write to data register accesses TxFIFO (See *Section 37.4.9: Data transmission and reception procedures*).

Note: Data is always right-aligned. Unused bits are ignored when writing to the register, and read as zero when the register is read. The Rx threshold setting must always correspond with the read access currently used.

37.6.5 SPI CRC polynomial register (SPIx_CRCPR)

Address offset: 0x10

Reset value: 0x0007

15	14	13	12	11	10	9	8	7	6	5	4	3	2	1	0
CRCPOLY[15:0]															
rw	rw	rw	rw	rw	rw	rw	rw	rw	rw	rw	rw	rw	rw	rw	rw

Bits 15:0 **CRCPOLY[15:0]:** CRC polynomial register

This register contains the polynomial for the CRC calculation.

The CRC polynomial (0007h) is the reset value of this register. Another polynomial can be configured as required.

Note: The polynomial value should be odd only. No even value is supported.

37.6.6 SPI Rx CRC register (SPIx_RXCRCR)

Address offset: 0x14

Reset value: 0x0000

15	14	13	12	11	10	9	8	7	6	5	4	3	2	1	0
RxCRC[15:0]															
r	r	r	r	r	r	r	r	r	r	r	r	r	r	r	r

Bits 15:0 **RXCRC[15:0]:** Rx CRC register

When CRC calculation is enabled, the RxCRC[15:0] bits contain the computed CRC value of the subsequently received bytes. This register is reset when the CRCEN bit in SPIx_CR1 register is written to 1. The CRC is calculated serially using the polynomial programmed in the SPIx_CRCPR register.

Only the 8 LSB bits are considered when the data frame format is set to be 8-bit data (CRCL bit in the SPIx_CR1 is cleared). CRC calculation is done based on any CRC8 standard.

The entire 16-bits of this register are considered when a 16-bit data frame format is selected (CRCL bit in the SPIx_CR1 register is set). CRC calculation is done based on any CRC16 standard.

A read to this register when the BSY Flag is set could return an incorrect value.

37.6.7 SPI Tx CRC register (SPIx_TXCRCR)

Address offset: 0x18

Reset value: 0x0000

15	14	13	12	11	10	9	8	7	6	5	4	3	2	1	0
TxCRC[15:0]															
r	r	r	r	r	r	r	r	r	r	r	r	r	r	r	r

Bits 15:0 **TxCRC[15:0]:** Tx CRC register

When CRC calculation is enabled, the TxCRC[7:0] bits contain the computed CRC value of the subsequently transmitted bytes. This register is reset when the CRCEN bit of SPIx_CR1 is written to 1. The CRC is calculated serially using the polynomial programmed in the SPIx_CRCPR register.

Only the 8 LSB bits are considered when the data frame format is set to be 8-bit data (CRCL bit in the SPIx_CR1 is cleared). CRC calculation is done based on any CRC8 standard.

The entire 16-bits of this register are considered when a 16-bit data frame format is selected (CRCL bit in the SPIx_CR1 register is set). CRC calculation is done based on any CRC16 standard.

A read to this register when the BSY flag is set could return an incorrect value.

37.6.8 SPI register map

Table 172 shows the SPI register map and reset values.

Table 172. SPI register map and reset values

Offset	Register	31	30	29	28	27	26	25	24	23	22	21	20	19	18	17	16	15	14	13	12	11	10	9	8	7	6	5	4	3	2	1	0
0x00	**SPIx_CR1**	Res.	Res.	Res.	Res.	Res.	Res.	Res.	Res.	Res.	Res.	Res.	Res.	Res.	Res.	Res.	Res.	BIDIMODE	BIDIOE	CRCEN	CRCNEXT	CRCL	RXONLY	SSM	SSI	LSBFIRST	SPE	BR [2:0]			MSTR	CPOL	CPHA
	Reset value																	0	0	0	0	0	0	0	0	0	0	0	0	0	0	0	0
0x04	**SPIx_CR2**	Res.	Res.	Res.	Res.	Res.	Res.	Res.	Res.	Res.	Res.	Res.	Res.	Res.	Res.	Res.	Res.	Res.	LDMA_TX	LDMA_RX	FRXTH	DS[3:0]				TXEIE	RXNEIE	ERRIE	FRF	NSSP	SSOE	TXDMAEN	RXDMAEN
	Reset value																		0	0	0	0	1	1	1	0	0	0	0	0	0	0	0
0x08	**SPIx_SR**	Res.	Res.	Res.	Res.	Res.	Res.	Res.	Res.	Res.	Res.	Res.	Res.	Res.	Res.	Res.	Res.	Res.	Res.	Res.	FTLVL[1:0]		FRLVL[1:0]		FRE	BSY	OVR	MODF	CRCERR	Res.	Res.	TXE	RXNE
	Reset value																				0	0	0	0	0	0	0	0	0	0	0	1	0
0x0C	**SPIx_DR**	Res.	Res.	Res.	Res.	Res.	Res.	Res.	Res.	Res.	Res.	Res.	Res.	Res.	Res.	Res.	Res.	DR[15:0]															
	Reset value																	0	0	0	0	0	0	0	0	0	0	0	0	0	0	0	0
0x10	**SPIx_CRCPR**	Res.	Res.	Res.	Res.	Res.	Res.	Res.	Res.	Res.	Res.	Res.	Res.	Res.	Res.	Res.	Res.	CRCPOLY[15:0]															
	Reset value																	0	0	0	0	0	0	0	0	0	0	0	0	0	1	1	1
0x14	**SPIx_RXCRCR**	Res.	Res.	Res.	Res.	Res.	Res.	Res.	Res.	Res.	Res.	Res.	Res.	Res.	Res.	Res.	Res.	RxCRC[15:0]															
	Reset value																	0	0	0	0	0	0	0	0	0	0	0	0	0	0	0	0
0x18	**SPIx_TXCRCR**	Res.	Res.	Res.	Res.	Res.	Res.	Res.	Res.	Res.	Res.	Res.	Res.	Res.	Res.	Res.	Res.	TxCRC[15:0]															
	Reset value																	0	0	0	0	0	0	0	0	0	0	0	0	0	0	0	0

Refer to *Section 2.2.2 on page 62* for the register boundary addresses.

38 Serial audio interface (SAI)

38.1 Introduction

The SAI interface (Serial Audio Interface) offers a wide set of audio protocols due to its flexibility and wide range of configurations. Many stereo or mono audio applications may be targeted. I2S standards, LSB or MSB-justified, PCM/DSP, TDM, and AC'97 protocols may be addressed for example. SPDIF output is offered when the audio block is configured as a transmitter.

To bring this level of flexibility and reconfigurability, the SAI contains two independent audio sub-blocks. Each block has it own clock generator and I/O line controller.

The SAI can work in master or slave configuration. The audio sub-blocks can be either receiver or transmitter and can work synchronously or not (with respect to the other one).

38.2 SAI main features

- Two independent audio sub-blocks which can be transmitters or receivers with their respective FIFO.
- 8-word integrated FIFOs for each audio sub-block.
- Synchronous or asynchronous mode between the audio sub-blocks.
- Master or slave configuration independent for both audio sub-blocks.
- Clock generator for each audio block to target independent audio frequency sampling when both audio sub-blocks are configured in master mode.
- Data size configurable: 8-, 10-, 16-, 20-, 24-, 32-bit.
- Audio protocol: I2S, LSB or MSB-justified, PCM/DSP, TDM, AC'97
- SPDIF output available if required.
- Up to 16 slots available with configurable size.
- Number of bits by frame can be configurable.
- Frame synchronization active level configurable (offset, bit length, level).
- First active bit position in the slot is configurable.
- LSB first or MSB first for data transfer.
- Mute mode.
- Stereo/Mono audio frame capability.
- Communication clock strobing edge configurable (SCK).
- Error flags with associated interrupts if enabled respectively.
  - Overrun and underrun detection,
  - Anticipated frame synchronization signal detection in slave mode,
  - Late frame synchronization signal detection in slave mode,
  - Codec not ready for the AC'97 mode in reception.
- Interruption sources when enabled:
  - Errors,
  - FIFO requests.
- 2-channel DMA interface.

38.3 SAI implementation

Table 173. STM32L431/433/443 SAI interfaces

Reference	SAI1	SAI2
STM32L433xx, STM32L443xx	X	-

38.4 SAI functional description

38.4.1 SAI block diagram

The SAI block diagram is shown in *Figure 410*.

Figure 410. Functional block diagram

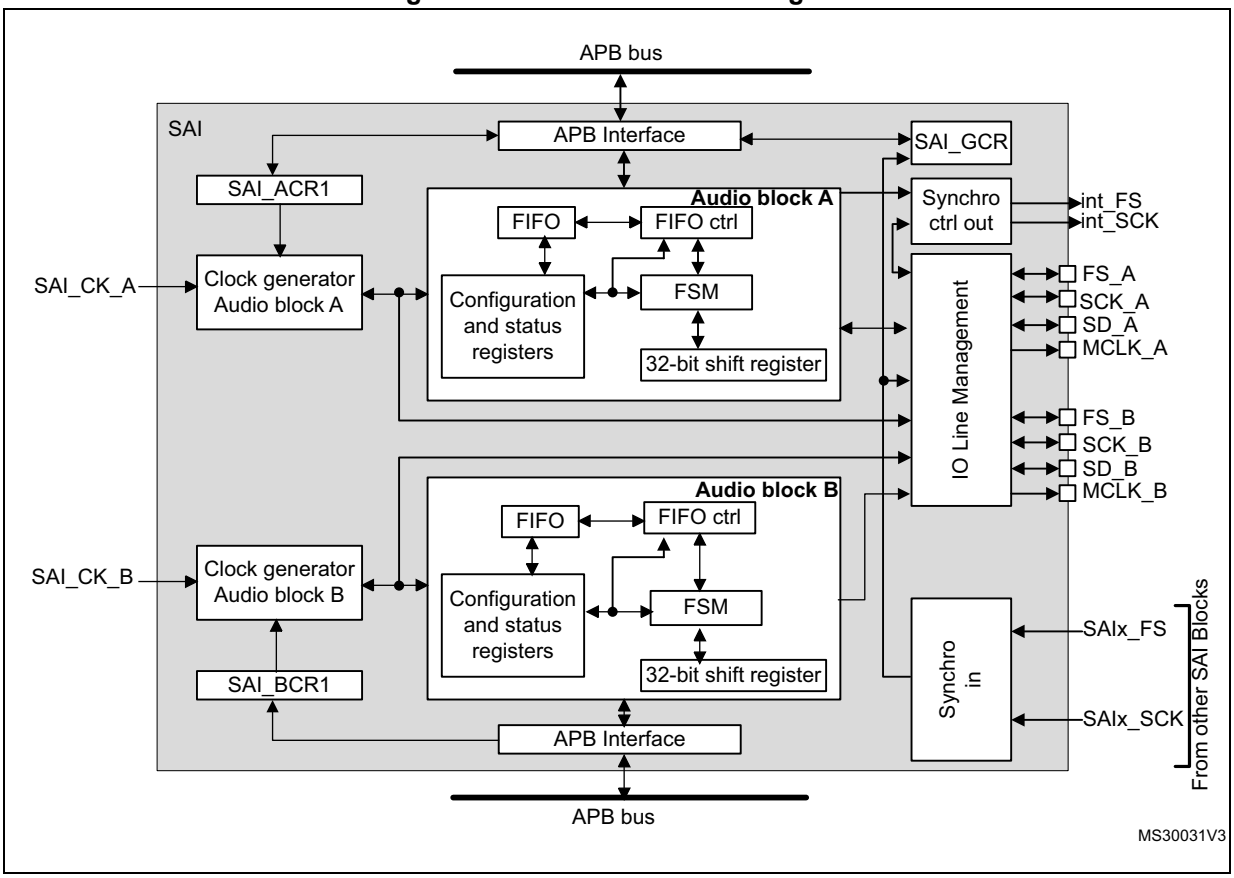

The SAI is mainly composed of two audio sub-blocks with their own clock generator. Each audio block integrates a 32-bit shift register controlled by their own functional state machine. Data are stored or read from the dedicated FIFO. FIFO may be accessed by the CPU, or by DMA in order to leave the CPU free during the communication. Each audio block is independent. They can be synchronous with each other.

An I/O line controller manages a set of 4 dedicated pins (SD, SCK, FS, MCLK) for a given audio block in the SAI. Some of these pins can be shared if the two sub-blocks are declared as synchronous to leave some free to be used as general purpose I/Os. The MCLK pin can be output, or not, depending on the application, the decoder requirement and whether the audio block is configured as the master.

If one SAI is configured to operate synchronously with another one, even more I/Os can be freed (except for pins SD_x).

The functional state machine can be configured to address a wide range of audio protocols. Some registers are present to set-up the desired protocols (audio frame waveform generator).

The audio sub-block can be a transmitter or receiver, in master or slave mode. The master mode means the SCK_x bit clock and the frame synchronization signal are generated from the SAI, whereas in slave mode, they come from another external or internal master. There is a particular case for which the FS signal direction is not directly linked to the master or slave mode definition. In AC'97 protocol, it will be an SAI output even if the SAI (link controller) is set-up to consume the SCK clock (and so to be in Slave mode).

Note: For ease of reading of this section, the notation SAI_x refers to SAI_A or SAI_B, where 'x' represents the SAI A or B sub-block.

38.4.2 Main SAI modes

Each audio sub-block of the SAI can be configured to be master or slave via MODE bits in the SAI_xCR1 register of the selected audio block.

Master mode

In master mode, the SAI delivers the timing signals to the external connected device:

- The bit clock and the frame synchronization are output on pin SCK_x and FS_x, respectively.
- If needed, the SAI can also generate a master clock on MCLK_x pin.

Both SCK_x, FS_x and MCLK_x are configured as outputs.

Slave mode

The SAI expects to receive timing signals from an external device.

- If the SAI sub-block is configured in asynchronous mode, then SCK_x and FS_x pins are configured as inputs.
- If the SAI sub-block is configured to operate synchronously with the second audio sub-block, the corresponding SCK_x and FS_x pins are left free to be used as general purpose I/Os.

In slave mode, MCLK_x pin is not used and can be assigned to another function.

It is recommended to enable the slave device before enabling the master.

Configuring and enabling SAI modes

Each audio sub-block can be independently defined as a transmitter or receiver through the MODE bit in the SAI_xCR1 register of the corresponding audio block. As a result, SAIx_SD pin will be respectively configured as an output or an input.

Two master audio blocks in the same SAI can be configured with two different MCLK and SCK clock frequencies. In this case they have to be configured in asynchronous mode.

Each of the audio blocks in the SAI are enabled by bit SAIXEN in the SAI_xCR1 register. As soon as this bit is active, the transmitter or the receiver is sensitive to the activity on the clock line, data line and synchronization line in slave mode.

In master TX mode, enabling the audio block immediately generates the bit clock for the external slaves even if there is no data in the FIFO, However FS signal generation is conditioned by the presence of data in the FIFO. After the FIFO receives the first data to transmit, this data is output to external slaves. If there is no data to transmit in the FIFO, 0 values are then sent in the audio frame with an underrun flag generation.

In slave mode, the audio frame starts when the audio block is enabled and when a start of frame is detected.

In Slave TX mode, no underrun event is possible on the first frame after the audio block is enabled, because the mandatory operating sequence in this case is:

1. Write into the SAI_xDR (by software or by DMA).
2. Wait until the FIFO threshold (FLH) flag is different from 000b (FIFO empty).
3. Enable the audio block in slave transmitter mode.

38.4.3 SAI synchronization mode

SAI sub-clock A and B can be synchronized.

Internal synchronization

An audio sub-block can be configured to operate synchronously with the second audio sub-block in the same SAI. In this case, the bit clock and the frame synchronization signals are shared to reduce the number of external pins used for the communication. The audio block configured in synchronous mode sees its own SCK_x, FS_x, and MCLK_x pins released back as GPIOs while the audio block configured in asynchronous mode is the one for which FS_x and SCK_x ad MCLK_x I/O pins are relevant (if the audio block is considered as master).

Typically, the audio block in synchronous mode can be used to configure the SAI in full duplex mode. One of the two audio blocks can be configured as a master and the other as slave, or both as slaves with one asynchronous block (corresponding SYNCEN[1:0] bits set to 00 in SAI_xCR1) and one synchronous block (corresponding SYNCEN[1:0] bits set to 01 in the SAI_xCR1).

Note: Due to internal resynchronization stages, PCLK APB frequency must be higher than twice the bit rate clock frequency.

Table 174. External Synchronization Selection

Block instance	SYNCIN= 3	SYNCIN= 2	SYNCIN= 1	SYNCIN= 0
SAI1	res	res	SAI2 sync	res
SAI2	res	res	res	SAI1 sync

38.4.4 Audio data size

The audio frame can target different data sizes by configuring bit DS[2:0] in the SAI_xCR1 register. The data sizes may be 8, 10, 16, 20, 24 or 32 bits. During the transfer, either the MSB or the LSB of the data are sent first, depending on the configuration of bit LSBFIRST in the SAI_xCR1 register.

38.4.5 Frame synchronization

The FS signal acts as the Frame synchronization signal in the audio frame (start of frame). The shape of this signal is completely configurable in order to target the different audio protocols with their own specificities concerning this Frame synchronization behavior. This reconfigurability is done using register SAI_xFRCR. *Figure 411* illustrates this flexibility.

Figure 411. Audio frame

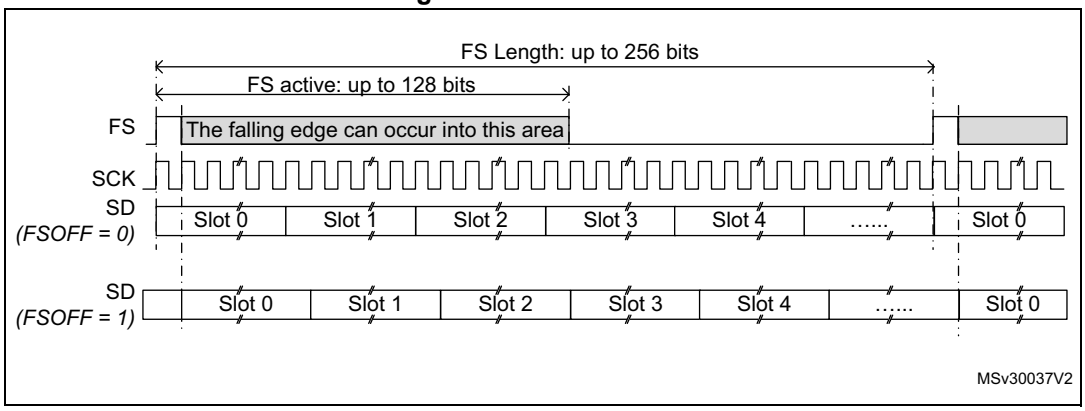

In AC'97 mode or in SPDIF mode (bit PRTCFG[1:0] = 10 or PRTCFG[1:0] = 01 in the SAI_xCR1 register), the frame synchronization shape is forced to match the AC'97 protocol. The SAI_xFRCR register value is ignored.

Each audio block is independent and consequently each one requires a specific configuration.

Frame length

- Master mode

  The audio frame length can be configured to up to 256 bit clock cycles, by setting FRL[7:0] field in the SAI_xFRCR register.

  If the frame length is greater than the number of declared slots for the frame, the remaining bits to transmit will be extended to 0 or the SD line will be released to HI-z depending the state of bit TRIS in the SAI_xCR2 register (refer to *Section : FS signal role*). In reception mode, the remaining bit is ignored.

  If bit NODIV is cleared, (FRL+1) must be equal to a power of 2, from 8 to 256, to ensure that an audio frame contains an integer number of MCLK pulses per bit clock cycle.

  If bit NODIV is set, the (FRL+1) field can take any value from 8 to 256. Refer to *Section 38.4.7: SAI clock generator*".

- Slave mode

  The audio frame length is mainly used to specify to the slave the number of bit clock cycles per audio frame sent by the external master. It is used mainly to detect from the master any anticipated or late occurrence of the Frame synchronization signal during an on-going audio frame. In this case an error will be generated. For more details refer to *Section 38.4.12: Error flags*.

  In slave mode, there are no constraints on the FRL[7:0] configuration in the SAI_xFRCR register.

The number of bits in the frame is equal to FRL[7:0] + 1.

The minimum number of bits to transfer in an audio frame is 8.

Frame synchronization polarity

FSPOL bit in the SAI_xFRCR register sets the active polarity of the FS pin from which a frame is started. The start of frame is edge sensitive.

In slave mode, the audio block waits for a valid frame to start transmitting or receiving. Start of frame is synchronized to this signal. It is effective only if the start of frame is not detected

during an ongoing communication and assimilated to an anticipated start of frame (refer to *Section 38.4.12: Error flags*).

In master mode, the frame synchronization is sent continuously each time an audio frame is complete until the SAIXEN bit in the SAI_xCR1 register is cleared. If no data are present in the FIFO at the end of the previous audio frame, an underrun condition will be managed as described in *Section 38.4.12: Error flags*), but the audio communication flow will not be interrupted.

Frame synchronization active level length

The FSALL[6:0] bits of the SAI_xFRCR register allow configuring the length of the active level of the Frame synchronization signal. The length can be set from 1 to 128 bit clock cycles.

As an example, the active length can be half of the frame length in I2S, LSB or MSB-justified modes, or one-bit wide for PCM/DSP or TDM mode.

Frame synchronization offset

Depending on the audio protocol targeted in the application, the Frame synchronization signal can be asserted when transmitting the last bit or the first bit of the audio frame (this is the case in I2S standard protocol and in MSB-justified protocol, respectively). FSOFF bit in the SAI_xFRCR register allows to choose one of the two configurations.

FS signal role

The FS signal can have a different meaning depending on the FS function. FSDEF bit in the SAI_xFRCR register selects which meaning it will have:

- 0: start of frame, like for instance the PCM/DSP, TDM, AC’97, audio protocols,
- 1: start of frame and channel side identification within the audio frame like for the I2S, the MSB or LSB-justified protocols.

When the FS signal is considered as a start of frame and channel side identification within the frame, the number of declared slots must be considered to be half the number for the left channel and half the number for the right channel. If the number of bit clock cycles on half audio frame is greater than the number of slots dedicated to a channel side, and TRIS = 0, 0 is sent for transmission for the remaining bit clock cycles in the SAI_xCR2 register. Otherwise if TRIS = 1, the SD line is released to HI-Z. In reception mode, the remaining bit clock cycles are not considered until the channel side changes.

Figure 412. FS role is start of frame + channel side identification (FSDEF = TRIS = 1)

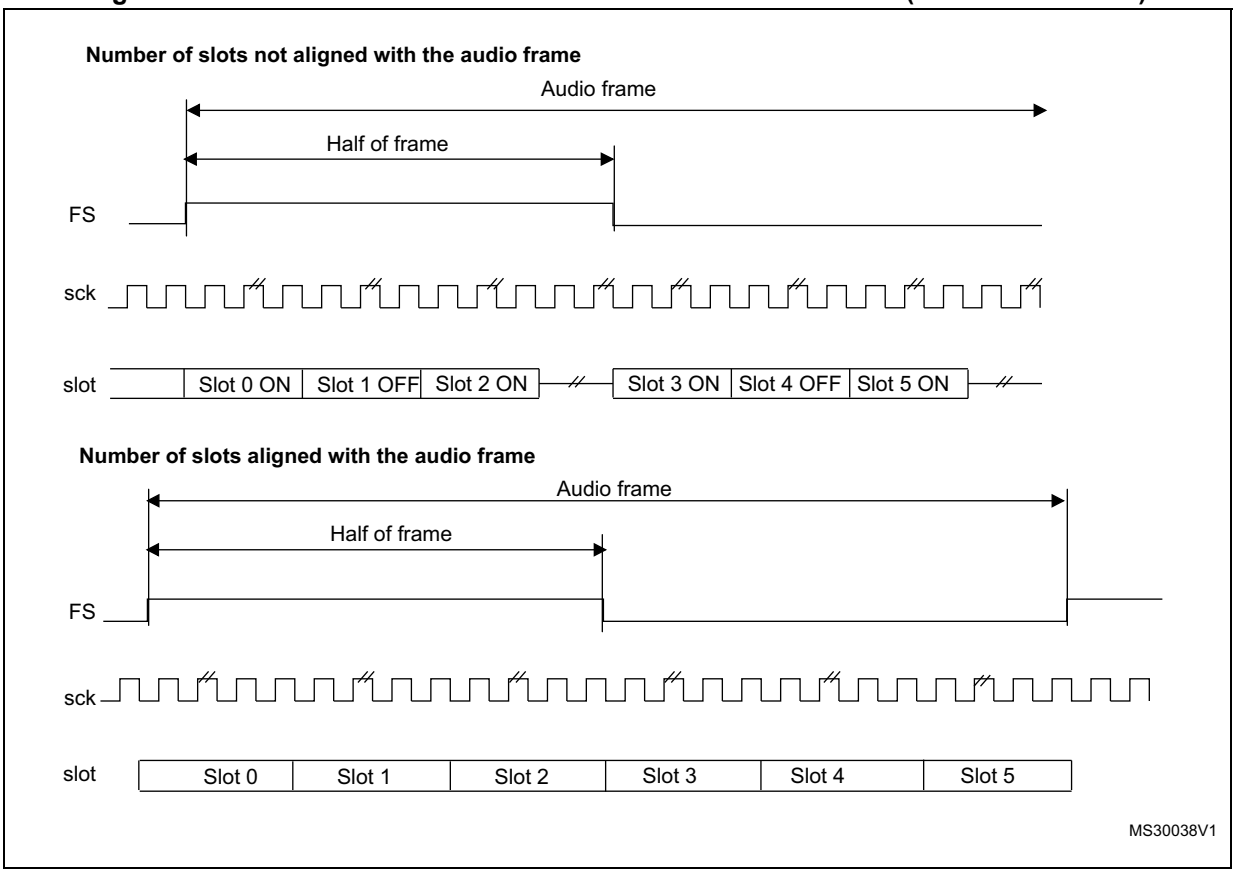

1. The frame length should be even.

If FSDEF bit in SAI_xFRCR is kept clear, so FS signal is equivalent to a start of frame, and if the number of slots defined in NBSLOT[3:0] in SAI_xSLOTR multiplied by the number of bits by slot configured in SLOTSZ[1:0] in SAI_xSLOTR is less than the frame size (bit FRL[7:0] in the SAI_xFRCR register), then:

- if TRIS = 0 in the SAI_xCR2 register, the remaining bit after the last slot will be forced to 0 until the end of frame in case of transmitter,
- if TRIS = 1, the line will be released to HI-Z during the transfer of these remaining bits. In reception mode, these bits are discarded.

Figure 413. FS role is start of frame (FSDEF = 0)

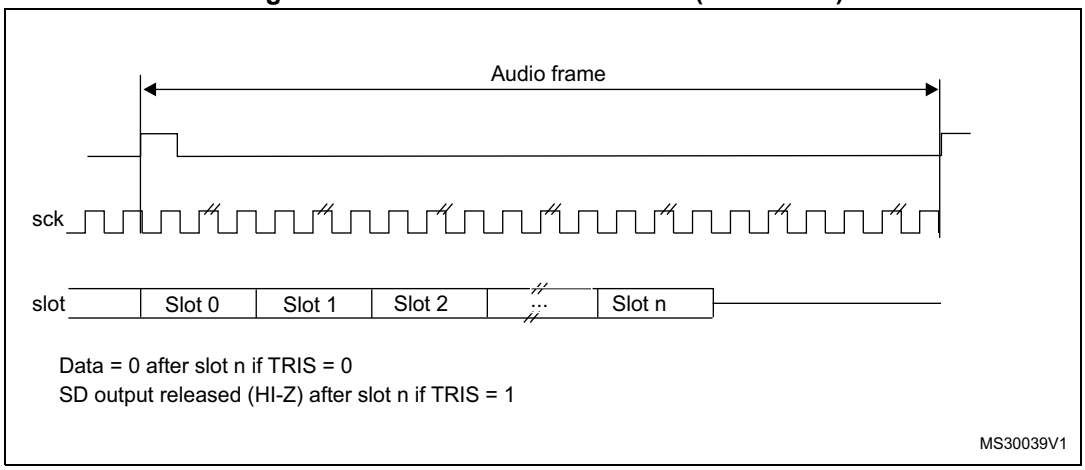

The FS signal is not used when the audio block in transmitter mode is configured to get the SPDIF output on the SD line. The corresponding FS I/O will be released and left free for other purposes.

38.4.6 Slot configuration

The slot is the basic element in the audio frame. The number of slots in the audio frame is equal to NBSLOT[3:0] + 1.

The maximum number of slots per audio frame is fixed at 16.

For AC'97 protocol or SPDIF (when bit PRTCFG[1:0] = 10 or PRTCFG[1:0] = 01), the number of slots is automatically set to target the protocol specification, and the value of NBSLOT[3:0] is ignored.

Each slot can be defined as a valid slot, or not, by setting SLOTEN[15:0] bits of the SAI_xSLOTR register.

When a invalid slot is transferred, the SD data line is either forced to 0 or released to HI-z depending on TRIS bit configuration (refer to *Section : Output data line management on an inactive slot*) in transmitter mode. In receiver mode, the received value from the end of this slot is ignored. Consequently, there will be no FIFO access and so no request to read or write the FIFO linked to this inactive slot status.

The slot size is also configurable as shown in *Figure 414*. The size of the slots is selected by setting SLOTSZ[1:0] bits in the SAI_xSLOTR register. The size is applied identically for each slot in an audio frame.

Figure 414. Slot size configuration with FBOFF = 0 in SAI_xSLOTR

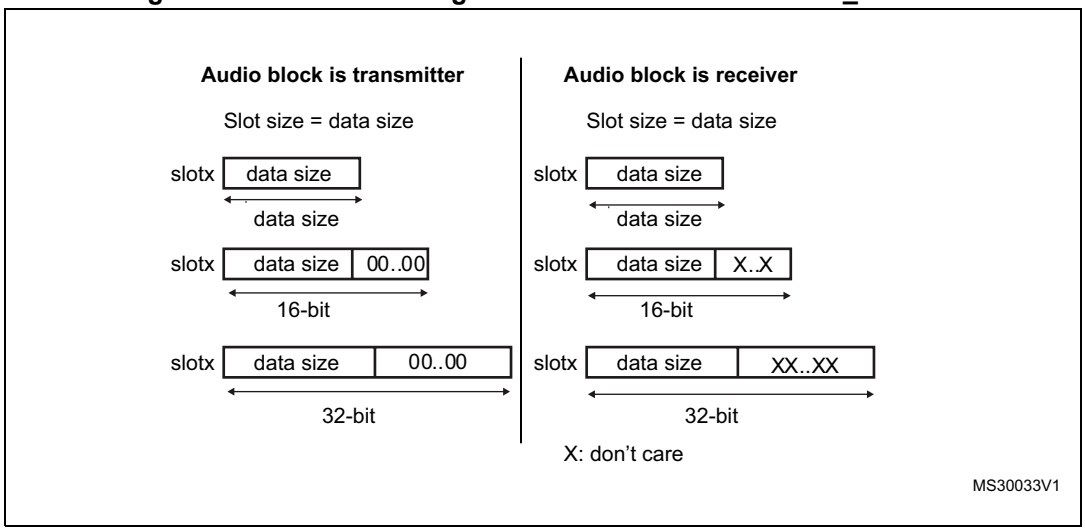

It is possible to choose the position of the first data bit to transfer within the slots. This offset is configured by FBOFF[4:0] bits in the SAI_xSLOTR register. 0 values will be injected in transmitter mode from the beginning of the slot until this offset position is reached. In reception, the bit in the offset phase is ignored. This feature targets the LSB justified protocol (if the offset is equal to the slot size minus the data size).

Figure 415. First bit offset

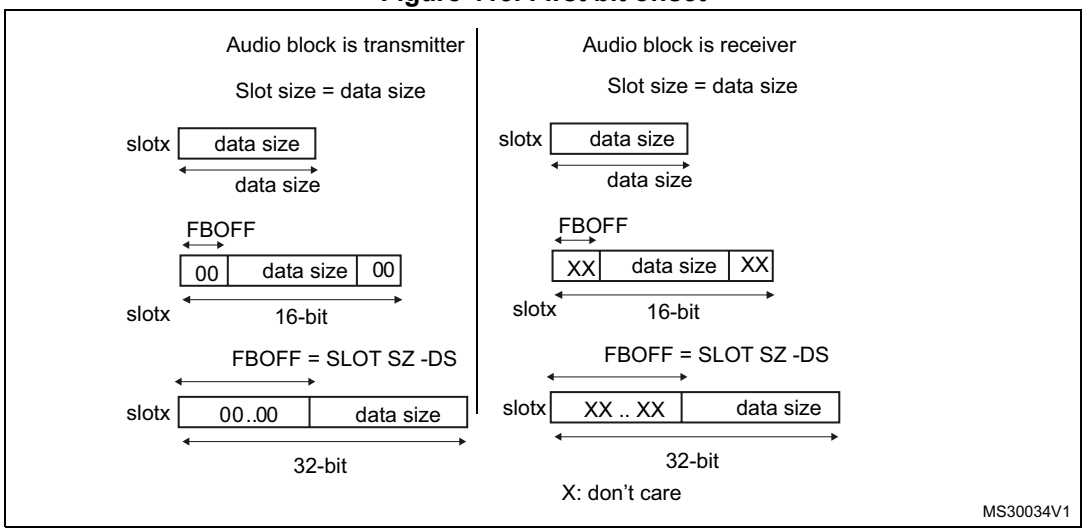

It is mandatory to respect the following conditions to avoid bad SAI behavior:

FBOFF ≤(SLOTSZ - DS),

DS ≤SLOTSZ,

NBSLOT x SLOTSZ ≤FRL (frame length),

The number of slots must be even when bit FSDEF in the SAI_xFRCR register is set.

In AC'97 and SPDIF protocol (bit PRTCFG[1:0] = 10 or PRTCFG[1:0] = 01), the slot size is automatically set as defined in *Section 38.4.9: AC'97 link controller*.

Refer to *Section 38.4.9: AC'97 link controller* for details on clock generator programming in AC'97 mode and to *Section 38.4.10: SPDIF output* for details on clock generator programming in SPDIF mode.

38.4.7 SAI clock generator

Each audio block has its own clock generator that makes these two blocks completely independent. There is no difference in terms of functionality between these two clock generators.

When the audio block is configured as Master, the clock generator provides the communication clock (the bit clock) and the master clock for external decoders.

When the audio block is defined as slave, the clock generator is OFF.

Figure 416 illustrates the architecture of the audio block clock generator.

Figure 416. Audio block clock generator overview

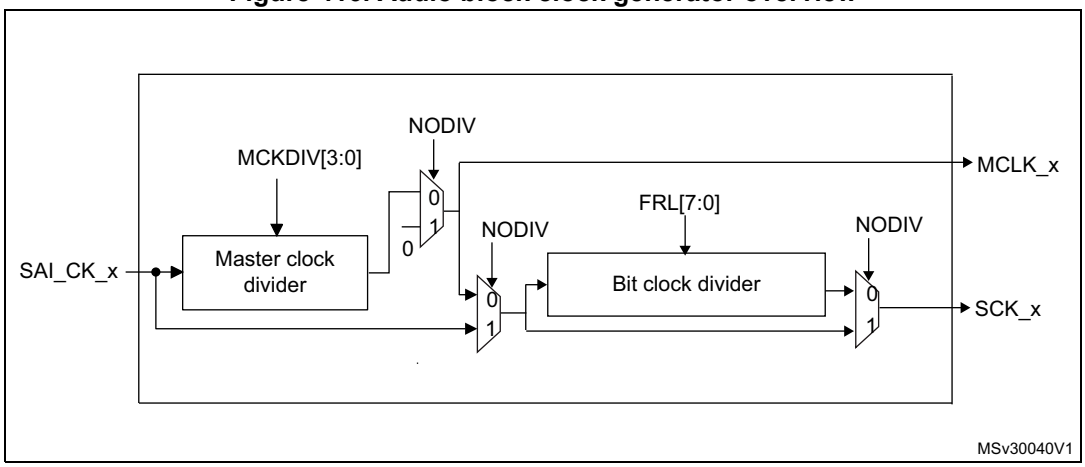

Note: If NODIV is set to 1, the MCLK_x signal will be set at 0 level if this pin is configured as the SAI pin in GPIO peripherals.

The clock source for the clock generator comes from the product clock controller. The SAI_CK_x clock is equivalent to the master clock which can be divided for the external decoders using bit MCKDIV[3:0]:

MCLK_x = SAI_CK_x / (MCKDIV[3:0] * 2), if MCKDIV[3:0] is not equal to 0000.

MCLK_x = SAI_CK_x, if MCKDIV[3:0] is equal to 0000.

MCLK_x signal is used only in TDM.

The division must be even in order to keep 50% on the Duty cycle on the MCLK output and on the SCK_x clock. If bit MCKDIV[3:0] = 0000, division by one is applied to obtain MCLK_x equal to SAI_CK_x.

In the SAI, the single ratio MCLK/FS = 256 is considered. Mostly, three frequency ranges will be encountered as illustrated in *Table 175*.

Table 175. Example of possible audio frequency sampling range

Input SAI_CK_x clock frequency	Most usual audio frequency sampling achievable	MCKDIV[3:0]
192 kHz x 256	192 kHz	MCKDIV[3:0] = 0000
	96 kHz	MCKDIV[3:0] = 0001
	48 kHz	MCKDIV[3:0] = 0010
	16 kHz	MCKDIV[3:0] = 0110
	8 kHz	MCKDIV[3:0] = 1100
44.1 kHz x 256	44.1 kHz	MCKDIV[3:0] = 0000
	22.05 kHz	MCKDIV[3:0] = 0001
	11.025 kHz	MCKDIV[3:0] = 0010
SAI_CK_x = MCLK(1)	MCLK	MCKDIV[3:0] = 0000

1. This may happen when the product clock controller selects an external clock source, instead of PLL clock.

The master clock can be generated externally on an I/O pad for external decoders if the corresponding audio block is declared as master with bit NODIV = 0 in the SAI_xCR1 register. In slave, the value set in this last bit is ignored since the clock generator is OFF, and the MCLK_x I/O pin is released for use as a general purpose I/O.

The bit clock is derived from the master clock. The bit clock divider sets the divider factor between the bit clock (SCK_x) and the master clock (MCLK_x) following the formula:

SCK_x = MCLK x (FRL[7:0] +1) / 256

where:

256 is the fixed ratio between MCLK and the audio frequency sampling.

FRL[7:0] is the number of bit clock cycles- 1 in the audio frame, configured in the SAI_xFRCR register.

In master mode it is mandatory that (FRL[7:0] +1) is equal to a number with a power of 2 (refer to *Section 38.4.5: Frame synchronization*) to obtain an even integer number of MCLK_x pulses by bit clock cycle. The 50% duty cycle is guaranteed on the bit clock (SCK_x).

The SAI_CK_x clock can also be equal to the bit clock frequency. In this case, NODIV bit in the SAI_xCR1 register should be set and the value inside the MCKDIV divider and the bit clock divider will be ignored. In this case, the number of bits per frame is fully configurable without the need to be equal to a power of two.

The bit clock strobing edge on SCK can be configured by bit CKSTR in the SAI_xCR1 register.

Refer to *Section 38.4.10: SPDIF output* for details on clock generator programming in SPDIF mode.

38.4.8 Internal FIFOs

Each audio block in the SAI has its own FIFO. Depending if the block is defined to be a transmitter or a receiver, the FIFO can be written or read, respectively. There is therefore only one FIFO request linked to FREQ bit in the SAI_xSR register.

An interrupt is generated if FREQIE bit is enabled in the SAI_xIM register. This depends on:

- FIFO threshold setting (FLVL bits in SAI_xCR2)
- Communication direction (transmitter or receiver). Refer to *Section : Interrupt generation in transmitter mode* and *Section : Interrupt generation in reception mode*.

Interrupt generation in transmitter mode

The interrupt generation depends on the FIFO configuration in transmitter mode:

- When the FIFO threshold bits in SAI_xCR2 register are configured as FIFO empty (FTH[2:0] set to 000b), an interrupt is generated (FREQ bit set by hardware to 1 in SAI_xSR register) if no data are available in SAI_xDR register (FLVL[2:0] bits in SAI_xSR is less than 001b). This Interrupt (FREQ bit in SAI_xSR register) is cleared by hardware when the FIFO is no more empty (FLVL[2:0] bits in SAI_xSR are different from 000b) i.e one or more data are stored in the FIFO.
- When the FIFO threshold bits in SAI_xCR2 register are configured as FIFO quarter full (FTH[2:0] set to 001b), an interrupt is generated (FREQ bit set by hardware to 1 in SAI_xSR register) if less than a quarter of the FIFO contains data (FLVL[2:0] bits in SAI_xSR are less than 010b). This Interrupt (FREQ bit in SAI_xSR register) is cleared by hardware when at least a quarter of the FIFO contains data (FLVL[2:0] bits in SAI_xSR are higher or equal to 010b).
- When the FIFO threshold bits in SAI_xCR2 register are configured as FIFO half full (FTH[2:0] set to 010b), an interrupt is generated (FREQ bit set by hardware to 1 in SAI_xSR register) if less than half of the FIFO contains data (FLVL[2:0] bits in SAI_xSR are less than 011b). This Interrupt (FREQ bit in SAI_xSR register) is cleared by hardware when at least half of the FIFO contains data (FLVL[2:0] bits in SAI_xSR are higher or equal to 011b).
- When the FIFO threshold bits in SAI_xCR2 register are configured as FIFO three quarter (FTH[2:0] set to 011b), an interrupt is generated (FREQ bit is set by hardware to 1 in SAI_xSR register) if less than three quarters of the FIFO contain data (FLVL[2:0] bits in SAI_xSR are less than 100b). This Interrupt (FREQ bit in SAI_xSR register) is cleared by hardware when at least three quarters of the FIFO contain data (FLVL[2:0] bits in SAI_xSR are higher or equal to 100b).
- When the FIFO threshold bits in SAI_xCR2 register are configured as FIFO full (FTH[2:0] set to 100b), an interrupt is generated (FREQ bit is set by hardware to 1 in SAI_xSR register) if the FIFO is not full (FLVL[2:0] bits in SAI_xSR is less than 101b). This Interrupt (FREQ bit in SAI_xSR register) is cleared by hardware when the FIFO is full (FLVL[2:0] bits in SAI_xSR is equal to 101b value).

Interrupt generation in reception mode

The interrupt generation depends on the FIFO configuration in reception mode:

- When the FIFO threshold bits in SAI_xCR2 register are configured as FIFO empty (FTH[2:0] set to 000b), an interrupt is generated (FREQ bit is set by hardware to 1 in SAI_xSR register) if at least one data is available in SAI_xDR register(FLVL[2:0] bits in SAI_xSR is higher or equal to 001b). This Interrupt (FREQ bit in SAI_xSR register) is

cleared by hardware when the FIFO becomes empty (FLVL[2:0] bits in SAI_xSR is equal to 000b) i.e no data are stored in FIFO.

- When the FIFO threshold bits in SAI_xCR2 register are configured as FIFO quarter fully (FTH[2:0] set to 001b), an interrupt is generated (FREQ bit is set by hardware to 1 in SAI_xSR register) if at least one quarter of the FIFO data locations are available (FLVL[2:0] bits in SAI_xSR is higher or equal to 010b). This Interrupt (FREQ bit in SAI_xSR register) is cleared by hardware when less than a quarter of the FIFO data locations become available (FLVL[2:0] bits in SAI_xSR is less than 010b).
- When the FIFO threshold bits in SAI_xCR2 register are configured as FIFO half fully (FTH[2:0] set to 010b value), an interrupt is generated (FREQ bit is set by hardware to 1 in SAI_xSR register) if at least half of the FIFO data locations are available (FLVL[2:0] bits in SAI_xSR is higher or equal to 011b). This Interrupt (FREQ bit in SAI_xSR register) is cleared by hardware when less than half of the FIFO data locations become available (FLVL[2:0] bits in SAI_xSR is less than 011b).
- When the FIFO threshold bits in SAI_xCR2 register are configured as FIFO three quarter full(FTH[2:0] set to 011b value), an interrupt is generated (FREQ bit is set by hardware to 1 in SAI_xSR register) if at least three quarters of the FIFO data locations are available (FLVL[2:0] bits in SAI_xSR is higher or equal to 100b). This Interrupt (FREQ bit in SAI_xSR register) is cleared by hardware when the FIFO has less than three quarters of the FIFO data locations avalable(FLVL[2:0] bits in SAI_xSR is less than 100b).
- When the FIFO threshold bits in SAI_xCR2 register are configured as FIFO full(FTH[2:0] set to 100b), an interrupt is generated (FREQ bit is set by hardware to 1 in SAI_xSR register) if the FIFO is full (FLVL[2:0] bits in SAI_xSR is equal to 101b). This Interrupt (FREQ bit in SAI_xSR register) is cleared by hardware when the FIFO is not full (FLVL[2:0] bits in SAI_xSR is less than 101b).

Like interrupt generation, the SAI can use the DMA if DMAEN bit in the SAI_xCR1 register is set. The FREQ bit assertion mechanism is the same as the interruption generation mechanism described above for FREQIE.

Each FIFO is an 8-word FIFO. Each read or write operation from/to the FIFO targets one word FIFO location whatever the access size. Each FIFO word contains one audio slot. FIFO pointers are incremented by one word after each access to the SAI_xDR register.

Data should be right aligned when it is written in the SAI_xDR.

Data received will be right aligned in the SAI_xDR.

The FIFO pointers can be reinitialized when the SAI is disabled by setting bit FFLUSH in the SAI_xCR2 register. If FFLUSH is set when the SAI is enabled the data present in the FIFO will be lost automatically.

38.4.9 AC’97 link controller

The SAI is able to work as an AC’97 link controller. In this protocol:

- The slot number and the slot size are fixed.
- The frame synchronization signal is perfectly defined and has a fixed shape.

To select this protocol, set PRTCFG[1:0] bits in the SAI_xCR1 register to 10. When AC’97 mode is selected, only data sizes of 16 or 20 bits can be used, otherwise the SAI behavior is not guaranteed.

- NBSLOT[3:0] and SLOTSZ[1:0] bits are consequently ignored.
- The number of slots is fixed to 13 slots. The first one is 16-bit wide and all the others are 20-bit wide (data slots).
- FBOFF[4:0] bits in the SAI_xSLOTR register are ignored.
- The SAI_xFRCR register is ignored.
- The MCLK is not used.

The FS signal from the block defined as asynchronous is configured automatically as an output, since the AC’97 controller link drives the FS signal whatever the master or slave configuration.

Figure 417 shows an AC’97 audio frame structure.

Figure 417. AC’97 audio frame

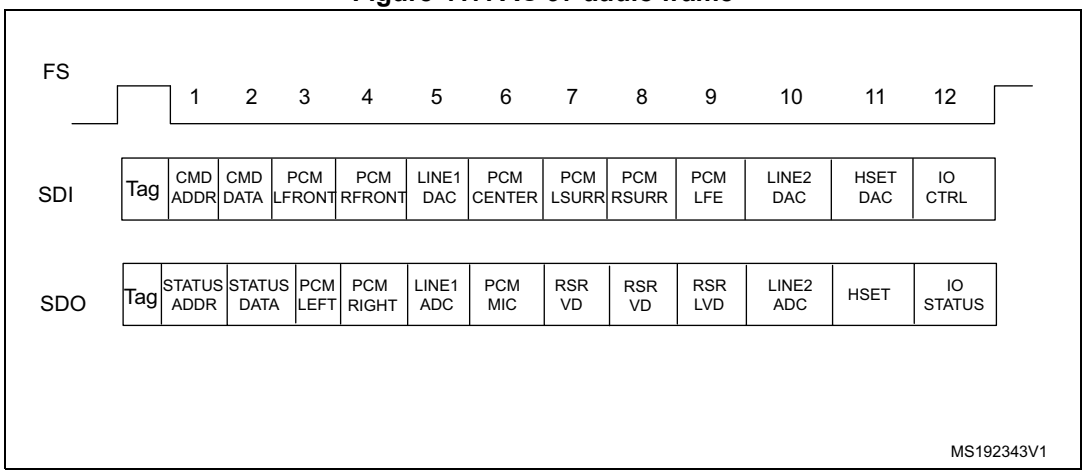

Note: In AC’97 protocol, bit 2 of the tag is reserved (always 0), so bit 2 of the TAG is forced to 0 level whatever the value written in the SAI FIFO.

For more details about tag representation, refer to the AC’97 protocol standard.

One SAI can be used to target an AC’97 point-to-point communication.

In receiver mode, the SAI acting as an AC’97 link controller requires no FIFO request and so no data storage in the FIFO when the Codec ready bit in the slot 0 is decoded low. If bit CNRDYIE is enabled in the SAI_xIM register, flag CNRDY will be set in the SAI_xSR register and an interrupt is generated. This flag is dedicated to the AC’97 protocol.

Clock generator programming in AC'97 mode

In AC'97 mode, the frame length is fixed at 256 bits, and its frequency shall be set to 48 kHz. The formulas given in *Section 38.4.7: SAI clock generator* shall be used with FRL = 255, order to generate the proper frame rate (F_{FS_x}).

38.4.10 SPDIF output

The SPDIF interface is available in transmitter mode only. It supports the audio IEC60958.

To select SPDIF mode, set PRTCFG[1:0] bit to 01 in the SAI_xCR1 register.

For SPDIF protocol:

- Only SD data line is enabled.
- FS, SCK, MCLK I/Os pins are left free.
- MODE[1] bit is forced to 0 to select the master mode in order to enable the clock generator of the SAI and manage the data rate on the SD line.
- The data size is forced to 24 bits. The value set in DS[2:0] bits in the SAI_xCR1 register is ignored.
- The clock generator must be configured to define the symbol-rate, knowing that the bit clock should be twice the symbol-rate. The data is coded in Manchester protocol.
- The SAI_xFRCR and SAI_xSLOTR registers are ignored. The SAI is configured internally to match the SPDIF protocol requirements as shown in *Figure 418*.

Figure 418. SPDIF format

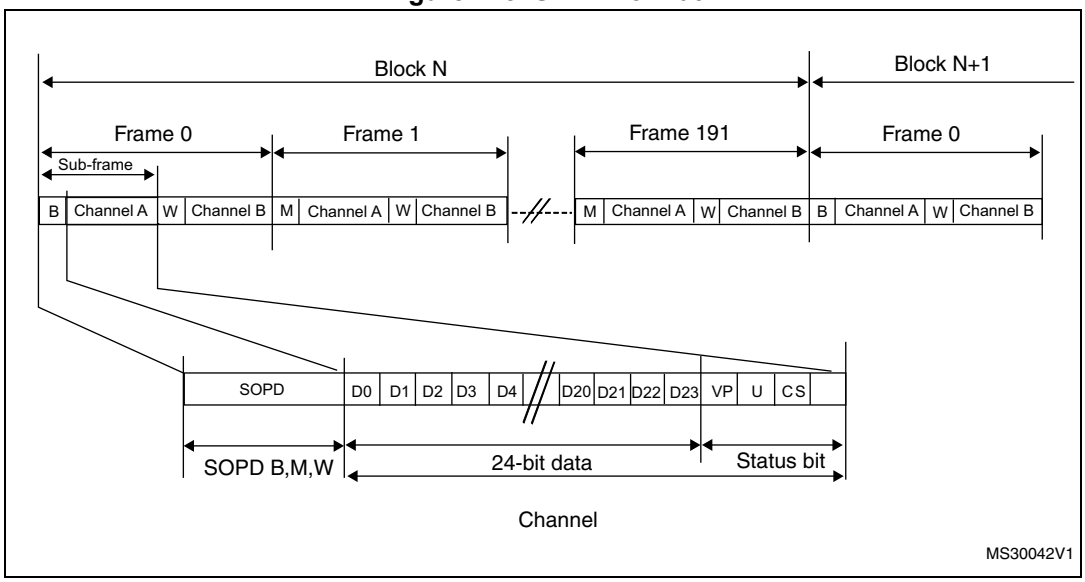

A SPDIF block contains 192 frames. Each frame is composed of two 32-bit sub-frames, generally one for the left channel and one for the right channel. Each sub-frame is composed of a SOPD pattern (4-bit) to specify if the sub-frame is the start of a block (and so is identifying a channel A) or if it is identifying a channel A somewhere in the block, or if it is referring to channel B (see *Table 176*). The next 28 bits of channel information are composed of 24 bits data + 4 status bits.

Table 176. SOPD pattern

SOPD	Preamble coding		Description
	last bit is 0	last bit is 1	
B	11101000	00010111	Channel A data at the start of block
W	11100100	00011011	Channel B data somewhere in the block
M	11100010	00011101	Channel A data

The data stored in SAI_xDR has to be filled as follows:

- SAI_xDR[26:24] contain the Channel status, User and Validity bits.
- SAI_xDR[23:0] contain the 24-bit data for the considered channel.

If the data size is 20 bits, then data shall be mapped on SAI_xDR[23:4].

If the data size is 16 bits, then data shall be mapped on SAI_xDR[23:8].

SAI_xDR[23] always represents the MSB.

Figure 419. SAI_xDR register ordering

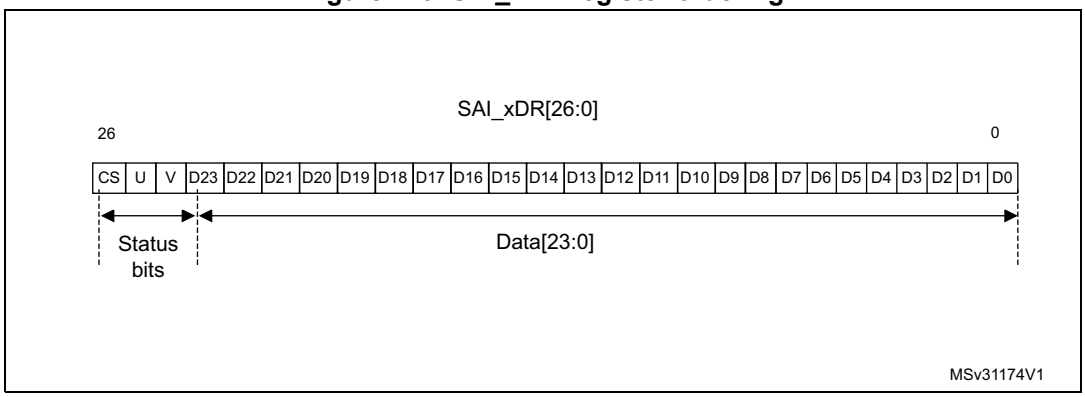

Note: The transfer is performed always with LSB first.

The SAI first sends the adequate preamble for each sub-frame in a block. The SAI_xDR is then sent on the SD line (manchester coded). The SAI ends the sub-frame by transferring the Parity bit calculated as described in *Table 177*.

Table 177. Parity bit calculation

SAI_xDR[26:0]	Parity bit P value transferred
odd number of 0	0
odd number of 1	1

The underrun is the only error flag available in the SAI_xSR register for SPDIF mode since the SAI can only operate in transmitter mode. As a result, the following sequence should be

executed to recover from an underrun error detected via the underrun interrupt or the underrun status bit:

1. Disable the DMA stream (via the DMA peripheral) if the DMA is used.
2. Disable the SAI and check that the peripheral is physically disabled by polling the SAIXEN bit in SAI_xCR1 register.
3. Clear the COVRUNDR flag in the SAI_xCLRFR register.
4. Flush the FIFO by setting the FFLUSH bit in SAI_xCR2.

   The software needs to point to the address of the future data corresponding to a start of new block (data for preamble B). If the DMA is used, the DMA source base address pointer should be updated accordingly.
5. Enable again the DMA stream (DMA peripheral) if the DMA used to manage data transfers according to the new source base address.
6. Enable again the SAI by setting SAIXEN bit in SAI_xCR1 register.

Clock generator programming in SPDIF generator mode

For the SPDIF generator, the SAI shall provide a bit clock equal to the symbol-rate. The table hereafter shows usual examples of symbol rates with respect to the audio sampling rate.

Table 178. Audio sampling frequency versus symbol rates

Audio Sampling Frequencies (F_S)	Symbol-rate
44.1 kHz	2.8224 MHz
48 kHz	3.072 MHz
96 kHz	6.144 MHz
192 kHz	12.288 MHz

More generally, the relationship between the audio sampling rate (F_S) and the bit-clock rate (F_{SCK_X}) is given by the formula:

$$F_S = \frac{F_{SAI_CK_x}}{64}$$

38.4.11 Specific features

The SAI interface embeds specific features which can be useful depending on the audio protocol selected. These functions are accessible through specific bits of the SAI_xCR2 register.

Mute mode

The mute mode can be used when the audio sub-block is a transmitter or a receiver.

Audio sub-block in transmission mode

In transmitter mode, the mute mode can be selected at anytime. The mute mode is active for entire audio frames. The MUTE bit in the SAI_xCR2 register enables the mute mode when it is set during an ongoing frame.

The mute mode bit is strobed only at the end of the frame. If it is set at this time, the mute mode is active at the beginning of the new audio frame and for a complete frame, until the next end of frame. The bit is then strobed to determine if the next frame will still be a mute frame.

If the number of slots set through NBSLOT[3:0] bits in the SAI_xSLOTR register is lower than or equal to 2, it is possible to specify if the value sent in mute mode is 0 or if it is the last value of each slot. The selection is done via MUTEVAL bit in the SAI_xCR2 register.

If the number of slots set in NBSLOT[3:0] bits in the SAI_xSLOTR register is greater than 2, MUTEVAL bit in the SAI_xCR2 is meaningless as 0 values are sent on each bit on each slot.

The FIFO pointers are still incremented in mute mode. This means that data present in the FIFO and for which the mute mode is requested are discarded.

Audio sub-block in reception mode

In reception mode, it is possible to detect a mute mode sent from the external transmitter when all the declared and valid slots of the audio frame receive 0 for a given consecutive number of audio frames (MUTECNT[5:0] bits in the SAI_xCR2 register).

When the number of MUTE frames is detected, the MUTEDET flag in the SAI_xSR register is set and an interrupt can be generated if MUTEDETIE bit is set in SAI_xCR2.

The mute frame counter is cleared when the audio sub-block is disabled or when a valid slot receives at least one data in an audio frame. The interrupt is generated just once, when the counter reaches the value specified in MUTECNT[5:0] bits. The interrupt event is then reinitialized when the counter is cleared.

Note: The mute mode is not available for SPDIF audio blocks.

Mono/stereo mode

In transmitter mode, the mono mode can be addressed, without any data preprocessing in memory, assuming the number of slots is equal to 2 (NBSLOT[3:0] = 0001 in SAI_xSLOTR). In this case, the access time to and from the FIFO will be reduced by 2 since the data for slot 0 is duplicated into data slot 1.

To enable the mono mode,

1. Set MONO bit to 1 in the SAI_xCR1 register.
2. Set NBSLOT to 1 and SLOTEN to 3 in SAI_xSLOTR.

In reception mode, the MONO bit can be set and is meaningful only if the number of slots is equal to 2 as in transmitter mode. When it is set, only slot 0 data will be stored in the FIFO. The data belonging to slot 1 will be discarded since, in this case, it is supposed to be the same as the previous slot. If the data flow in reception mode is a real stereo audio flow with a distinct and different left and right data, the MONO bit is meaningless. The conversion from the output stereo file to the equivalent mono file is done by software.

Companding mode

Telecommunication applications can require to process the data to be transmitted or received using a data companding algorithm.

Depending on the COMP[1:0] bits in the SAI_xCR2 register (used only when TDM mode is selected), the application software can choose to process or not the data before sending it on SD serial output line (compression) or to expand the data after the reception on SD serial

input line (expansion) as illustrated in *Figure 420*. The two companding modes supported are the µ-Law and the A-Law log which are a part of the CCITT G.711 recommendation.

The companding standard used in the United States and Japan is the µ-Law. It supports 14 bits of dynamic range (COMP[1:0] = 10 in the SAI_xCR2 register).

The European companding standard is A-Law and supports 13 bits of dynamic range (COMP[1:0] = 11 in the SAI_xCR2 register).

Both µ-Law or A-Law companding standard can be computed based on 1's complement or 2's complement representation depending on the CPL bit setting in the SAI_xCR2 register.

In µ-Law and A-Law standards, data are coded as 8 bits with MSB alignment. Companded data are always 8-bit wide. For this reason, DS[2:0] bits in the SAI_xCR1 register will be forced to 010 when the SAI audio block is enabled (bit SAIXEN = 1 in the SAI_xCR1 register) and when one of these two companding modes selected through the COMP[1:0] bits.

If no companding processing is required, COMP[1:0] bits should be kept clear.

Figure 420. Data companding hardware in an audio block in the SAI

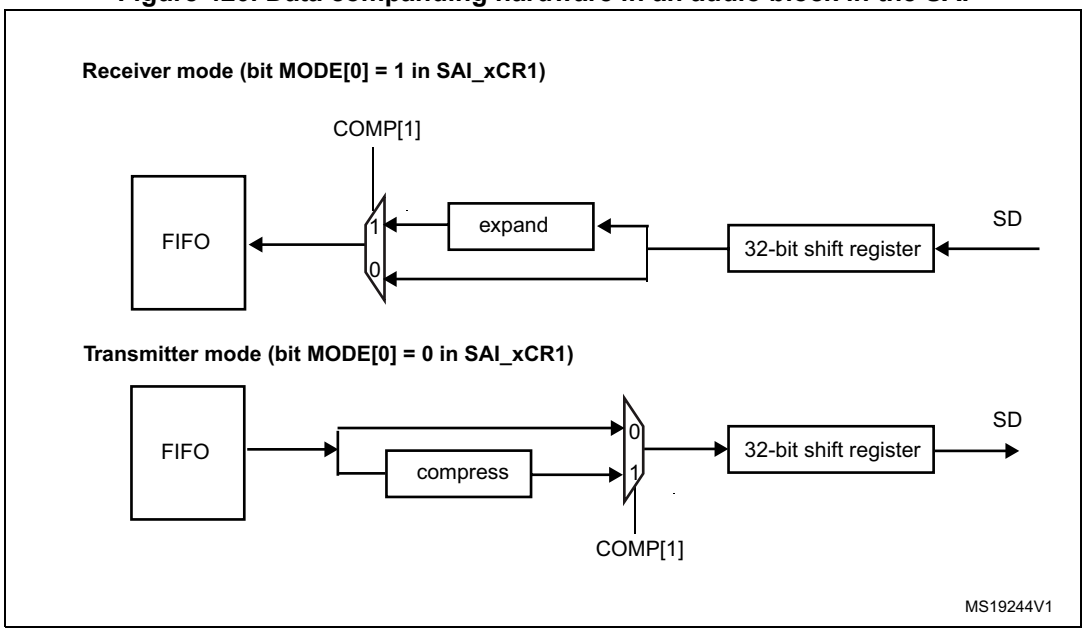

1. Not applicable when AC'97 or SPDIF are selected.

Expansion and compression mode are automatically selected through the SAI_xCR2:

- If the SAI audio block is configured to be a transmitter, and if the COMP[1] bit is set in the SAI_xCR2 register, the compression mode will be applied.
- If the SAI audio block is declared as a receiver, the expansion algorithm will be applied.

Output data line management on an inactive slot

In transmitter mode, it is possible to choose the behavior of the SD line output when an inactive slot is sent on the data line (via TRIS bit).

- Either the SAI forces 0 on the SD output line when an inactive slot is transmitted, or
- The line is released in HI-z state at the end of the last bit of data transferred, to release the line for other transmitters connected to this node.

It is important to note that the two transmitters cannot attempt to drive the same SD output pin simultaneously, which could result in a short circuit. To ensure a gap between transmissions, if the data is lower than 32-bit, the data can be extended to 32-bit by setting bit SLOTSZ[1:0] = 10 in the SAI_xSLOTR register. The SD output pin will then be tri-stated at the end of the LSB of the active slot (during the padding to 0 phase to extend the data to 32-bit) if the following slot is declared inactive.

In addition, if the number of slots multiplied by the slot size is lower than the frame length, the SD output line will be tri-stated when the padding to 0 is done to complete the audio frame.

Figure 421 illustrates these behaviors.

Figure 421. Tristate strategy on SD output line on an inactive slot

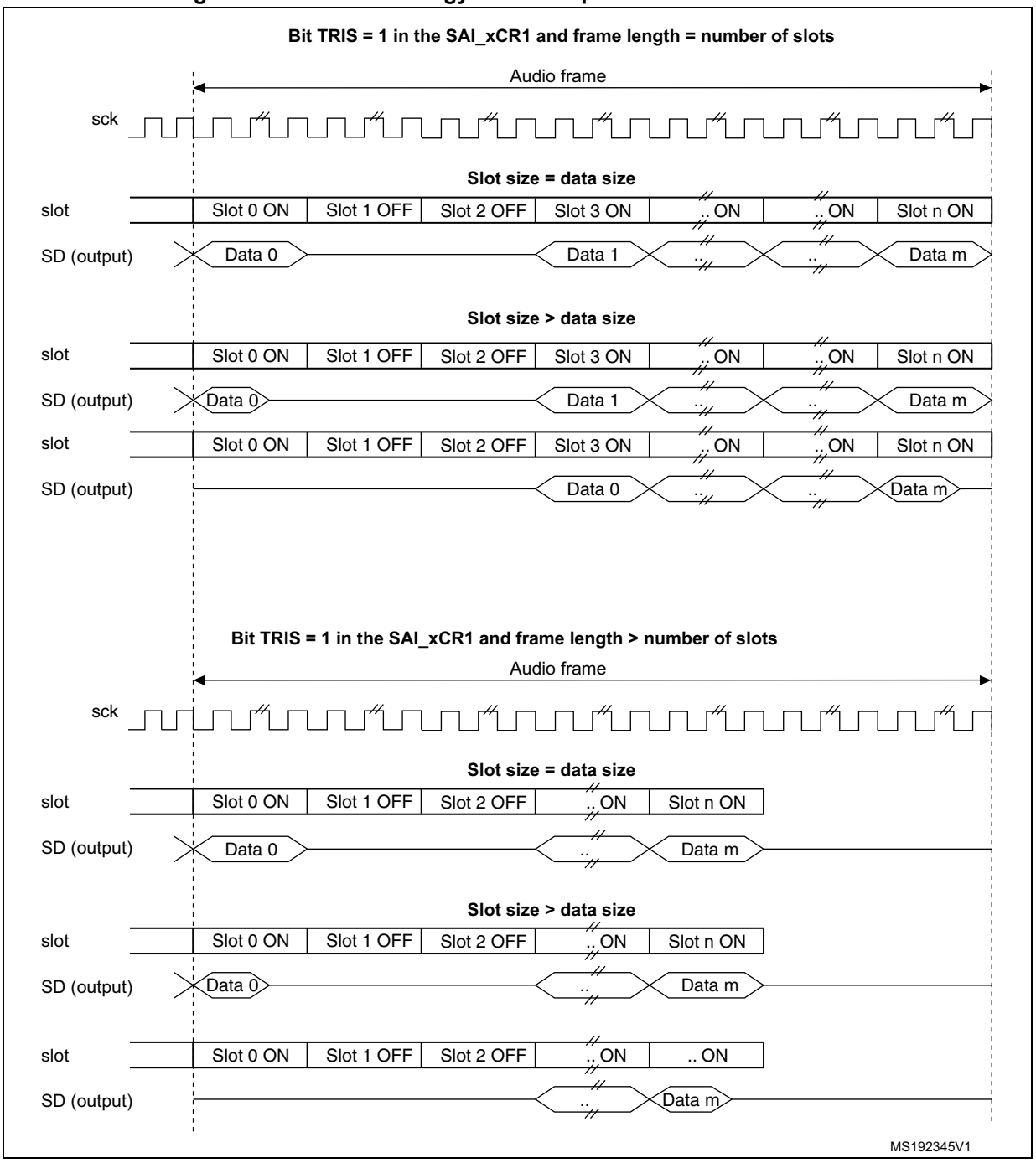

When the selected audio protocol uses the FS signal as a start of frame and a channel side identification (bit FSDEF = 1 in the SAI_xFRCR register), the tristate mode is managed according to *Figure 422* (where bit TRIS in the SAI_xCR1 register = 1, and FSDEF=1, and half frame length is higher than number of slots/2, and NBSLOT=6).

Figure 422. Tristate on output data line in a protocol like I2S

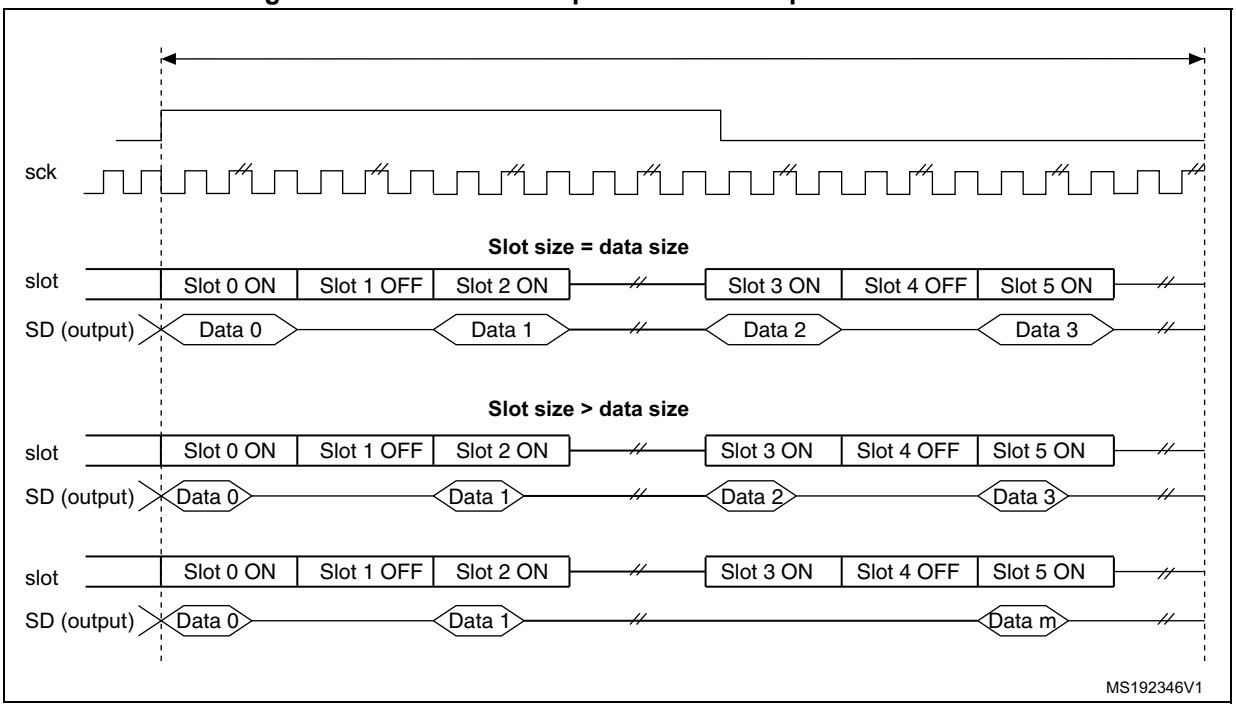

If the TRIS bit in the SAI_xCR2 register is cleared, all the High impedance states on the SD output line on *Figure 421* and *Figure 422* are replaced by a drive with a value of 0.

38.4.12 Error flags

The SAI implements the following error flags:

- FIFO overrun/underrun
- Anticipated frame synchronization detection
- Late frame synchronization detection
- Codec not ready (AC'97 exclusively)
- Wrong clock configuration in master mode.

FIFO overrun/underrun (OVRUDR)

The FIFO overrun/underrun bit is called OVRUDR in the SAI_xSR register.

The overrun or underrun errors share the same bit since an audio block can be either receiver or transmitter and each audio block in a given SAI has its own SAI_xSR register.

Overrun

When the audio block is configured as receiver, an overrun condition may appear if data are received in an audio frame when the FIFO is full and not able to store the received data. In this case, the received data are lost, the flag OVRUDR in the SAI_xSR register is set and an interrupt is generated if OVRUDRIE bit is set in the SAI_xIM register. The slot number, from which the overrun occurs, is stored internally. No more data will be stored into the FIFO until it becomes free to store new data. When the FIFO has at least one data free, the SAI audio block receiver will store new data (from new audio frame) from the slot number which was stored internally when the overrun condition was detected. This avoids data slot de-alignment in the destination memory (refer to *Figure 423*).

The OVRUDR flag is cleared when COVRUDR bit is set in the SAI_xCLRFR register.

Figure 423. Overrun detection error

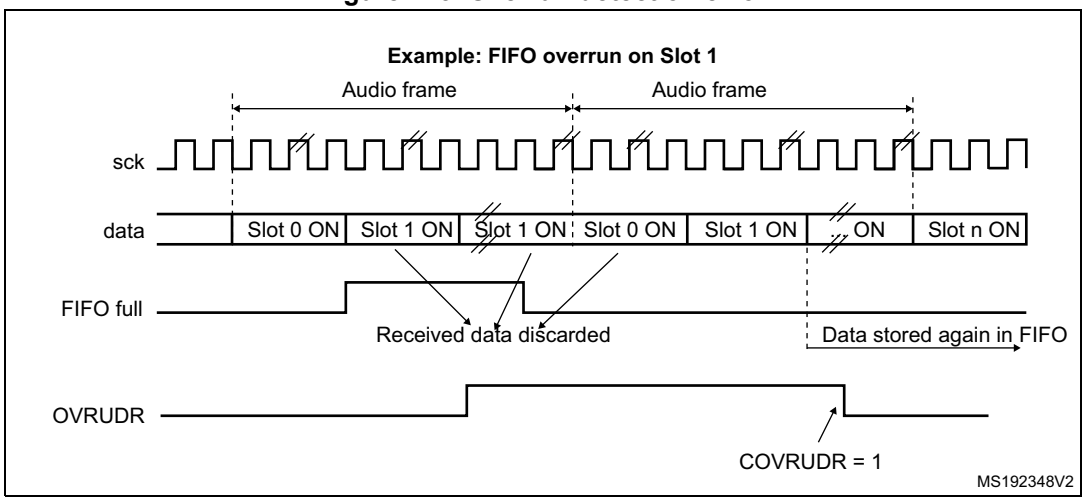

Underrun

An underrun may occur when the audio block in the SAI is a transmitter and the FIFO is empty when data need to be transmitted. If an underrun is detected, the slot number for which the event occurs is stored and MUTE value (00) is sent until the FIFO is ready to transmit the data corresponding to the slot for which the underrun was detected (refer to *Figure 424*). This avoids desynchronization between the memory pointer and the slot in the audio frame.

The underrun event sets the OVRUDR flag in the SAI_xSR register and an interrupt is generated if the OVRUDRIE bit is set in the SAI_xIM register. To clear this flag, set COVRUDR bit in the SAI_xCLRFR register.

The underrun event can occur when the audio sub-block is configured as master or slave.

Figure 424. FIFO underrun event

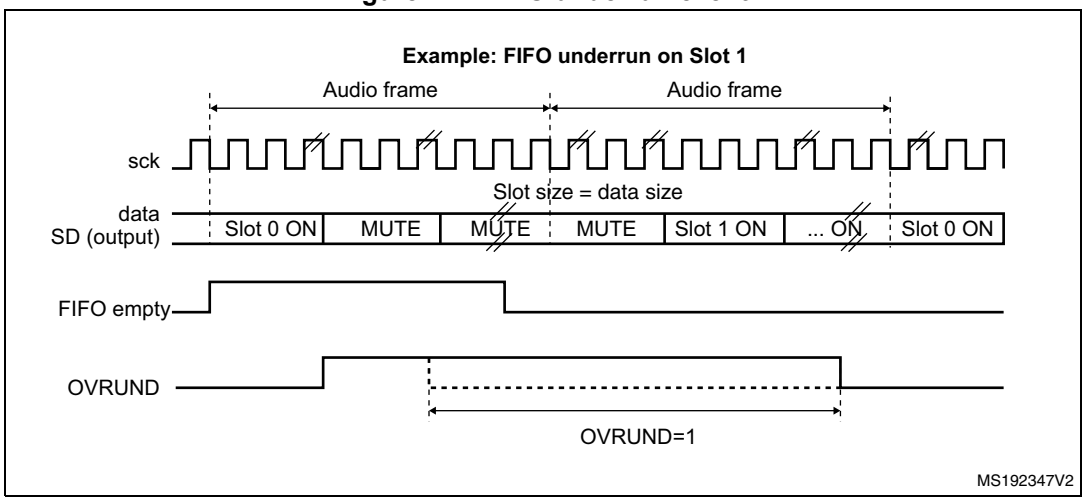

Anticipated frame synchronization detection (AFSDET)

The AFSDET flag is used only in slave mode. It is never asserted in master mode. It indicates that a frame synchronization (FS) has been detected earlier than expected since the frame length, the frame polarity, the frame offset are defined and known.

Anticipated frame detection sets the AFSDET flag in the SAI_xSR register.

This detection has no effect on the current audio frame which is not sensitive to the anticipated FS. This means that “parasitic” events on signal FS are flagged without any perturbation of the current audio frame.

An interrupt is generated if the AFSDETIE bit is set in the SAI_xIM register. To clear the AFSDET flag, CAFSDET bit must be set in the SAI_xCLRFR register.

To resynchronize with the master after an anticipated frame detection error, four steps are required:

1. Disable the SAI block by resetting SAIXEN bit in SAI_xCR1 register. To make sure the SAI is disabled, read back the SAIXEN bit and check it is set to 0.
2. Flush the FIFO via FFLUS bit in SAI_xCR2 register.
3. Enable again the SAI peripheral (SAIXEN bit set to 1).
4. The SAI block will wait for the assertion on FS to restart the synchronization with master.

Note: The SAIXEN flag is not asserted in AC’97 mode since the SAI audio block acts as a link controller and generates the FS signal even when declared as slave. It has no meaning in SPDIF mode since the FS signal is not used.

Late frame synchronization detection

The LFSDET flag in the SAI_xSR register can be set only when the SAI audio block operates as a slave. The frame length, the frame polarity and the frame offset configuration are known in register SAI_xFRCR.

If the external master does not send the FS signal at the expecting time thus generating the signal too late, the LFSDET flag is set and an interrupt is generated if LFSDETIE bit is set in the SAI_xIM register.

The LFSDET flag is cleared when CLFSDET bit is set in the SAI_xCLRFR register.

The late frame synchronization detection flag is set when the corresponding error is detected. The SAI needs to be resynchronized with the master (see sequence described in *Section : Anticipated frame synchronization detection (AFSDET)*).

In a noisy environment, glitches on the SCK clock may be wrongly detected by the audio block state machine and shift the SAI data at a wrong frame position. This event can be detected by the SAI and reported as a late frame synchronization detection error.

There is no corruption if the external master is not managing the audio data frame transfer in continuous mode, which should not be the case in most applications. In this case, the LFSDET flag will be set.

Note: The LFSDET flag is not asserted in AC’97 mode since the SAI audio block acts as a link controller and generates the FS signal even when declared as slave. It has no meaning in SPDIF mode since the signal FS is not used by the protocol.

Codec not ready (CNRDY AC'97)

The CNRDY flag in the SAI_xSR register is relevant only if the SAI audio block is configured to operate in AC'97 mode (PRTCFG[1:0] = 10 in the SAI_xCR1 register). If CNRDYIE bit is set in the SAI_xIM register, an interrupt is generated when the CNRDY flag is set.

CNRDY is asserted when the Codec is not ready to communicate during the reception of the TAG 0 (slot0) of the AC'97 audio frame. In this case, no data will be automatically stored into the FIFO since the Codec is not ready, until the TAG 0 indicates that the Codec is ready. All the active slots defined in the SAI_xSLOTR register will be captured when the Codec is ready.

To clear CNRDY flag, CCNRDY bit must be set in the SAI_xCLRFR register.

Wrong clock configuration in master mode (with NODIV = 0)

When the audio block operates as a master (MODE[1] = 0) and NODIV bit is equal to 0, the WCKCFG flag is set as soon as the SAI is enabled if the following conditions are met:

- (FRL+1) is not a power of 2, and
- (FRL+1) is not between 8 and 256.

MODE, NODIV, and SAIXEN bits belong to SAI_xCR1 register and FRL to SAI_xFRCR register.

If WCKCFGIE bit is set, an interrupt is generated when WCKCFG flag is set in the SAI_xSR register. To clear this flag, set CWCKCFG bit in the SAI_xCLRFR register.

When WCKCFG bit is set, the audio block is automatically disabled, thus performing a hardware clear of SAIXEN bit.

38.4.13 Disabling the SAI

The SAI audio block can be disabled at any moment by clearing SAIXEN bit in the SAI_xCR1 register. All the already started frames are automatically completed before the SAI is stops working. SAIXEN bit remains High until the SAI is completely switched-off at the end of the current audio frame transfer.

If an audio block in the SAI operates synchronously with the other one, the one which is the master must be disabled first.

38.4.14 SAI DMA interface

To free the CPU and to optimize bus bandwidth, each SAI audio block has an independent DMA interface to read/write from/to the SAI_xDR register (to access the internal FIFO). There is one DMA channel per audio sub-block supporting basic DMA request/acknowledge protocol.

To configure the audio sub-block for DMA transfer, set DMAEN bit in the SAI_xCR1 register. The DMA request is managed directly by the FIFO controller depending on the FIFO threshold level (for more details refer to *Section 38.4.8: Internal FIFOs*). DMA transfer direction is linked to the SAI audio sub-block configuration:

- If the audio block operates as a transmitter, the audio block FIFO controller outputs a DMA request to load the FIFO with data written in the SAI_xDR register.
- If the audio block is operates as a receiver, the DMA request is related to read operations from the SAI_xDR register.

Follow the sequence below to configure the SAI interface in DMA mode:

1. Configure SAI and FIFO threshold levels to specify when the DMA request will be launched.
2. Configure SAI DMA channel.
3. Enable the DMA.
4. Enable the SAI interface.

Note: Before configuring the SAI block, the SAI DMA channel must be disabled.

38.5 SAI interrupts

The SAI supports 7 interrupt sources as shown in *Table 179*.

Table 179. SAI interrupt sources

Interrupt source	Interrupt group	Audio block mode	Interrupt enable	Interrupt clear
FREQ	FREQ	Master or slave Receiver or transmitter	FREQIE in SAI_xIM register	Depends on: – FIFO threshold setting (FLVL bits in SAI_xCR2) – Communication direction (transmitter or receiver) For more details refer to *Section 38.4.8: Internal FIFOs*
OVRUDR	ERROR	Master or slave Receiver or transmitter	OVRUDRIE in SAI_xIM register	COVRUDR = 1 in SAI_xCLRFR register
AFSDET	ERROR	Slave (not used in AC'97 mode and SPDIF mode)	AFSDETIE in SAI_xIM register	CAFSDET = 1 in SAI_xCLRFR register
LFSDET	ERROR	Slave (not used in AC'97 mode and SPDIF mode)	LFSDETIE in SAI_xIM register	CLFSDET = 1 in SAI_xCLRFR register
CNRDY	ERROR	Slave (only in AC'97 mode)	CNRDYIE in SAI_xIM register	CCNRDY = 1 in SAI_xCLRFR register
MUTEDET	MUTE	Master or slave Receiver mode only	MUTEDETIE in SAI_xIM register	CMUTEDET = 1 in SAI_xCLRFR register
WCKCFG	ERROR	Master with NODIV = 0 in SAI_xCR1 register	WCKCFGIE in SAI_xIM register	CWCKCFG = 1 in SAI_xCLRFR register

Follow the sequence below to enable an interrupt:

1. Disable SAI interrupt.
2. Configure SAI.
3. Configure SAI interrupt source.
4. Enable SAI.

38.6 SAI registers

38.6.1 Global configuration register (SAI_GCR)

Address offset: 0x00

Reset value: 0x0000 0000

31	30	29	28	27	26	25	24	23	22	21	20	19	18	17	16
Res.	Res.	Res.	Res.	Res.	Res.	Res.	Res.	Res.	Res.	Res.	Res.	Res.	Res.	Res.	Res.

15	14	13	12	11	10	9	8	7	6	5	4	3	2	1	0
Res.	Res.	Res.	Res.	Res.	Res.	Res.	Res.	Res.	Res.	SYNCOUT[1:0]		Res.	Res.	Res.	Res.
										rw	rw				

Bits 31:6 Reserved, always read as 0.

Bits 5:4 **SYNCOUT[1:0]**: Synchronization outputs
These bits are set and cleared by software.
00: No synchronization output signals. SYNCOUT[1:0] should be configured as No synchronization output signals when audio block is configured as SPDIF
01: Block A used for further synchronization for others SAI
10: Block B used for further synchronization for others SAI
11: Reserved. These bits must be set when both audio block (A and B) are disabled.

Bits 3:0 Reserved, always read as 0.

38.6.2 Configuration register 1 (SAI_ACR1 / SAI_BCR1)

Address offset: Block A: 0x004

Address offset: Block B: 0x024

Reset value: 0x0000 0040

31	30	29	28	27	26	25	24	23	22	21	20	19	18	17	16
Res.	Res.	Res.	Res.	Res.	Res.	Res.	Res.	MCKDIV[3:0]				NODIV	Res.	DMAEN	SAIX EN
								rw	rw	rw	rw	rw		rw	rw

15	14	13	12	11	10	9	8	7	6	5	4	3	2	1	0
Res.	Res.	OUTD RIV	MONO	SYNCEN[1:0]		CKSTR	LSBFIRST	DS[2:0]			Res.	PRTCFG[1:0]		MODE[1:0]	
		rw	rw	rw	rw	rw	rw	rw	rw	rw		rw	rw	rw	rw

Bits 31:24 Reserved, always read as 0.

Bits 23:20 MCKDIV[3:0]: Master clock divider.

These bits are set and cleared by software. These bits are meaningless when the audio block operates in slave mode. They have to be configured when the audio block is disabled.

0000: Divides by 1 the master clock input.

Others: the master clock frequency is calculated accordingly to the following formula:

$$F_{SCK_x} = \frac{F_{SAI_CK_x}}{MCKDIV \times 2}$$

Bit 19 **NODIV:** No divider.

This bit is set and cleared by software.

0: Master clock generator is enabled

1: No divider used in the clock generator (in this case Master Clock Divider bit has no effect)

Bit 18 Reserved, always read as 0.

Bit 17 **DMAEN**: DMA enable.

This bit is set and cleared by software.

0: DMA disabled

1: DMA enabled

Note: Since the audio block defaults to operate as a transmitter after reset, the MODE[1:0] bits must be configured before setting DMAEN to avoid a DMA request in receiver mode.

Bit 16 **SAIXEN**: Audio block enable where x is A or B.

This bit is set by software.

To switch off the audio block, the application software must program this bit to 0 and poll the bit till it reads back 0, meaning that the block is completely disabled. Before setting this bit to 1, check that it is set to 0, otherwise the enable command will not be taken into account.

This bit allows to control the state of SAIx audio block. If it is disabled when an audio frame transfer is ongoing, the ongoing transfer completes and the cell is fully disabled at the end of this audio frame transfer.

0: SAIx audio block disabled

1: SAIx audio block enabled.

Note: When SAIx block is configured in master mode, the clock must be present on the input of SAIx before setting SAIXEN bit.

Bits 15:14 Reserved, always read as 0.

Bit 13 **OUTDRIV**: Output drive.

This bit is set and cleared by software.

0: Audio block output driven when SAIXEN is set

1: Audio block output driven immediately after the setting of this bit.

Note: This bit has to be set before enabling the audio block and after the audio block configuration.

Bit 12 **MONO**: Mono mode.

This bit is set and cleared by software. It is meaningful only when the number of slots is equal to 2. When the mono mode is selected, slot 0 data are duplicated on slot 1 when the audio block operates as a transmitter. In reception mode, the slot1 is discarded and only the data received from slot 0 are stored. Refer to *Section : Mono/stereo mode* for more details.

0: Stereo mode

1: Mono mode.

Bits 11:10 **SYNCEN[1:0]:** Synchronization enable.

These bits are set and cleared by software. They must be configured when the audio sub-block is disabled.

00: audio sub-block in asynchronous mode.

01: audio sub-block is synchronous with the other internal audio sub-block. In this case, the audio sub-block must be configured in slave mode

10: Reserved.

11: Reserved

Note: The audio sub-block should be configured as asynchronous when SPDIF mode is enabled.

Bit 9 **CKSTR:** Clock strobing edge.

This bit is set and cleared by software. It must be configured when the audio block is disabled. This bit has no meaning in SPDIF audio protocol.

0: Signals generated by the SAI change on SCK rising edge, while signals received by the SAI are sampled on the SCK falling edge.

1: Signals generated by the SAI change on SCK falling edge, while signals received by the SAI are sampled on the SCK rising edge.

Bit 8 **LSBFIRST:** Least significant bit first.

This bit is set and cleared by software. It must be configured when the audio block is disabled. This bit has no meaning in AC'97 audio protocol since AC'97 data are always transferred with the MSB first. This bit has no meaning in SPDIF audio protocol since in SPDIF data are always transferred with LSB first.

0: Data are transferred with MSB first

1: Data are transferred with LSB first

Bits 7:5 **DS[2:0]:** Data size.

These bits are set and cleared by software. These bits are ignored when the SPDIF protocols are selected (bit PRTCFG[1:0]), because the frame and the data size are fixed in such case. When the companding mode is selected through COMP[1:0] bits, DS[1:0] are ignored since the data size is fixed to 8 bits by the algorithm.

These bits must be configured when the audio block is disabled.

000: Reserved

001: Reserved

010: 8 bits

011: 10 bits

100: 16 bits

101: 20 bits

110: 24 bits

111: 32 bits

Bit 4 Reserved, always read as 0.

Bits 3:2 **PRTCFG[1:0]:** Protocol configuration.

These bits are set and cleared by software. These bits have to be configured when the audio block is disabled.

00: Free protocol. Free protocol allows to use the powerful configuration of the audio block to address a specific audio protocol (such as I2S, LSB/MSB justified, TDM, PCM/DSP...) by setting most of the configuration register bits as well as frame configuration register.

01: SPDIF protocol

10: AC'97 protocol

11: Reserved

Bits 1:0 **MODE[1:0]:** SAIx audio block mode.

These bits are set and cleared by software. They must be configured when SAIx audio block is disabled.

00: Master transmitter

01: Master receiver

10: Slave transmitter

11: Slave receiver

Note: When the audio block is configured in SPDIF mode, the master transmitter mode is forced (MODE[1:0] = 00). In Master transmitter mode, the audio block starts generating the FS and the clocks immediately.

38.6.3 Configuration register 2 (SAI_ACR2 / SAI_BCR2)

Address offset: Block A: 0x008

Address offset: Block B: 0x028

Reset value: 0x0000 0000

31	30	29	28	27	26	25	24	23	22	21	20	19	18	17	16
Res.	Res.	Res.	Res.	Res.	Res.	Res.	Res.	Res.	Res.	Res.	Res.	Res.	Res.	Res.	Res.

15	14	13	12	11	10	9	8	7	6	5	4	3	2	1	0
COMP[1:0]		CPL	MUTECNT[5:0]						MUTE VAL	MUTE	TRIS	FFLUSH	FTH		
rw	rw	rw	rw	rw	rw	rw	rw	rw	rw	rw	rw	w	rw	rw	rw

Bits 31:16 Reserved, always read as 0

Bits 15:14 **COMP[1:0]**: Companding mode.

These bits are set and cleared by software. The µ-Law and the A-Law log are a part of the CCITT G.711 recommendation, the type of complement that will be used depends on *CPL bit*.
The data expansion or data compression are determined by the state of bit MODE[0].
The data compression is applied if the audio block is configured as a transmitter.
The data expansion is automatically applied when the audio block is configured as a receiver.
Refer to *Section : Companding mode* for more details.
00: No companding algorithm
01: Reserved.
10: µ-Law algorithm
11: A-Law algorithm

Note: Companding mode is applicable only when TDM is selected.

Bit 13 **CPL**: Complement bit.

This bit is set and cleared by software.
It defines the type of complement to be used for companding mode
0: 1's complement representation.
1: 2's complement representation.

Note: This bit has effect only when the companding mode is µ-Law algorithm or A-Law algorithm.

Bits 12:7 **MUTECNT[5:0]**: Mute counter.

These bits are set and cleared by software. They are used only in reception mode.
The value set in these bits is compared to the number of consecutive mute frames detected in reception. When the number of mute frames is equal to this value, the flag MUTEDET will be set and an interrupt will be generated if bit MUTEDETIE is set.
Refer to *Section : Mute mode* for more details.

Bit 6 **MUTEVAL**: Mute value.

This bit is set and cleared by software.It must be written before enabling the audio block: SAIXEN.
This bit is meaningful only when the audio block operates as a transmitter, the number of slots is lower or equal to 2 and the MUTE bit is set.
If more slots are declared, the bit value sent during the transmission in mute mode is equal to 0, whatever the value of MUTEVAL.
if the number of slot is lower or equal to 2 and MUTEVAL = 1, the MUTE value transmitted for each slot is the one sent during the previous frame.
Refer to *Section : Mute mode* for more details.
0: Bit value 0 is sent during the mute mode.
1: Last values are sent during the mute mode.

Note: This bit is meaningless and should not be used for SPDIF audio blocks.

Bit 5 **MUTE:** Mute.

This bit is set and cleared by software. It is meaningful only when the audio block operates as a transmitter. The MUTE value is linked to value of MUTEVAL if the number of slots is lower or equal to 2, or equal to 0 if it is greater than 2.
Refer to *Section : Mute mode* for more details.
0: No mute mode.
1: Mute mode enabled.

Note: This bit is meaningless and should not be used for SPDIF audio blocks.

Bit 4 **TRIS**: Tristate management on data line.

This bit is set and cleared by software. It is meaningful only if the audio block is configured as a transmitter. This bit is not used when the audio block is configured in SPDIF mode. It should be configured when SAI is disabled.

Refer to *Section : Output data line management on an inactive slot* for more details.

0: SD output line is still driven by the SAI when a slot is inactive.

1: SD output line is released (HI-Z) at the end of the last data bit of the last active slot if the next one is inactive.

Bit 3 **FFLUSH:** FIFO flush.

This bit is set by software. It is always read as 0. This bit should be configured when the SAI is disabled.

0: No FIFO flush.

1: FIFO flush. Programming this bit to 1 triggers the FIFO Flush. All the internal FIFO pointers (read and write) are cleared. In this case data still present in the FIFO are lost (no more transmission or received data lost). Before flushing, SAI DMA stream/interruption must be disabled

Bits 2:0 **FTH:** FIFO threshold.

This bit is set and cleared by software.

000: FIFO empty
001: ¼ FIFO
010: ½ FIFO
011: ¾ FIFO
100: FIFO full
101: Reserved
110: Reserved
111: Reserved

38.6.4 Frame configuration register (SAI_AFRCR / SAI_BFRCR)

Address offset: Block A: 0x00C

Address offset: Block B: 0x02C

Reset value: 0x0000 0007

Note: This register has no meaning in AC'97 and SPDIF audio protocol

31	30	29	28	27	26	25	24	23	22	21	20	19	18	17	16
Res.	Res.	Res.	Res.	Res.	Res.	Res.	Res.	Res.	Res.	Res.	Res.	Res.	FSOFF	FSPOL	FSDEF
													rw	rw	r

15	14	13	12	11	10	9	8	7	6	5	4	3	2	1	0
Res.	FSALL[6:0]							FRL[7:0]							
	rw	rw	rw	rw	rw	rw	rw	rw	rw	rw	rw	rw	rw	rw	rw

Bits 31:19 Reserved, always read as 0.

Bit 18 **FSOFF**: Frame synchronization offset.

This bit is set and cleared by software. It is meaningless and is not used in AC'97 or SPDIF audio block configuration. This bit must be configured when the audio block is disabled.

0: FS is asserted on the first bit of the slot 0.

1: FS is asserted one bit before the first bit of the slot 0.

Bit 17 **FSPOL**: Frame synchronization polarity.

This bit is set and cleared by software. It is used to configure the level of the start of frame on the FS signal. It is meaningless and is not used in AC'97 or SPDIF audio block configuration.

This bit must be configured when the audio block is disabled.

0: FS is active low (falling edge)

1: FS is active high (rising edge)

Bit 16 **FSDEF**: Frame synchronization definition.

This bit is set and cleared by software.

0: FS signal is a start frame signal

1: FS signal is a start of frame signal + channel side identification

When the bit is set, the number of slots defined in the SAI_xSLOTR register has to be even. It means that half of this number of slots will be dedicated to the left channel and the other slots for the right channel (e.g: this bit has to be set for I2S or MSB/LSB-justified protocols...).

This bit is meaningless and is not used in AC'97 or SPDIF audio block configuration. It must be configured when the audio block is disabled.

Bit 15 Reserved, always read as 0.

Bits 14:8 **FSALL[6:0]**: Frame synchronization active level length.

These bits are set and cleared by software. They specify the length in number of bit clock (SCK) + 1 (FSALL[6:0] + 1) of the active level of the FS signal in the audio frame

These bits are meaningless and are not used in AC'97 or SPDIF audio block configuration.

They must be configured when the audio block is disabled.

Bits 7:0 **FRL[7:0]**: Frame length.

These bits are set and cleared by software. They define the audio frame length expressed in number of SCK clock cycles: the number of bits in the frame is equal to FRL[7:0] + 1.

The minimum number of bits to transfer in an audio frame must be equal to 8, otherwise the audio block will behaves in an unexpected way. This is the case when the data size is 8 bits and only one slot 0 is defined in NBSLOT[4:0] of SAI_xSLOTR register (NBSLOT[3:0] = 0000).

In master mode, if the master clock (available on MCLK_x pin) is used, the frame length should be aligned with a number equal to a power of 2, ranging from 8 to 256. When the master clock is not used (NODIV = 1), it is recommended to program the frame length to an value ranging from 8 to 256.

These bits are meaningless and are not used in AC'97 or SPDIF audio block configuration.

38.6.5 Slot register (SAI_ASLOTR / SAI_BSLOTR)

Address offset: Block A: 0x010

Address offset: Block B: 0x030

Reset value: 0x0000 0000

Note: This register has no meaning in AC'97 and SPDIF audio protocol

31	30	29	28	27	26	25	24	23	22	21	20	19	18	17	16
SLOTEN[15:0]															
rw	rw	rw	rw	rw	rw	rw	rw	rw	rw	rw	rw	rw	rw	rw	rw

15	14	13	12	11	10	9	8	7	6	5	4	3	2	1	0
Res.	Res.	Res.	Res.	NBSLOT[3:0]				SLOTSZ[1:0]		Res.	FBOFF[4:0]				
				rw	rw	rw	rw	rw	rw		rw	rw	rw	rw	rw

Bits 31:16 **SLOTEN[15:0]**: Slot enable.

These bits are set and cleared by software.
Each SLOTEN bit corresponds to a slot position from 0 to 15 (maximum 16 slots).
0: Inactive slot.
1: Active slot.
The slot must be enabled when the audio block is disabled.
They are ignored in AC'97 or SPDIF mode.

Bits 15:12 Reserved, always read as 0.

Bits 11:8 **NBSLOT[3:0]**: Number of slots in an audio frame.

These bits are set and cleared by software.
The value set in this bitfield represents the number of slots + 1 in the audio frame (including the number of inactive slots). The maximum number of slots is 16.
The number of slots should be even if FSDEF bit in the SAI_xFRCR register is set.
The number of slots must be configured when the audio block is disabled.
They are ignored in AC'97 or SPDIF mode.

Bits 7:6 **SLOTSZ[1:0]**: Slot size

This bits is set and cleared by software.
The slot size must be higher or equal to the data size. If this condition is not respected, the behavior of the SAI will be undetermined.
Refer to *Section : Output data line management on an inactive slot* for information on how to drive SD line.
These bits must be set when the audio block is disabled.
They are ignored in AC'97 or SPDIF mode.
00: The slot size is equivalent to the data size (specified in DS[3:0] in the SAI_xCR1 register).
01: 16-bit
10: 32-bit
11: Reserved

Bit 1 Reserved, always read as 0.

Bits 4:0 **FBOFF[4:0]**: First bit offset

These bits are set and cleared by software.
The value set in this bitfield defines the position of the first data transfer bit in the slot. It represents an offset value. In transmission mode, the bits outside the data field are forced to 0. In reception mode, the extra received bits are discarded.
These bits must be set when the audio block is disabled.
They are ignored in AC'97 or SPDIF mode.

38.6.6 Interrupt mask register 2 (SAI_AIM / SAI_BIM)

Address offset: block A: 0x014

Address offset: block B: 0x034

Reset value: 0x0000 0000

31	30	29	28	27	26	25	24	23	22	21	20	19	18	17	16
Res.	Res.	Res.	Res.	Res.	Res.	Res.	Res.	Res.	Res.	Res.	Res.	Res.	Res.	Res.	Res.

15	14	13	12	11	10	9	8	7	6	5	4	3	2	1	0
Res.	Res.	Res.	Res.	Res.	Res.	Res.	Res.	Res.	LFSDET IE	AFSDET IE	CNRDY IE	FREQ IE	WCKCFG IE	MUTEDET IE	OVRUDR IE
									rw	rw	rw	rw	rw	rw	rw

Bits 31:7 Reserved, always read as 0.

Bit 6 **LFSDETIE**: Late frame synchronization detection interrupt enable.
This bit is set and cleared by software.
0: Interrupt is disabled
1: Interrupt is enabled
When this bit is set, an interrupt will be generated if the LFSDET bit is set in the SAI_xSR register.
This bit is meaningless in AC'97, SPDIF mode or when the audio block operates as a master.

Bit 5 **AFSDETIE**: Anticipated frame synchronization detection interrupt enable.
This bit is set and cleared by software.
0: Interrupt is disabled
1: Interrupt is enabled
When this bit is set, an interrupt will be generated if the AFSDET bit in the SAI_xSR register is set.
This bit is meaningless in AC'97, SPDIF mode or when the audio block operates as a master.

Bit 4 **CNRDYIE**: Codec not ready interrupt enable (AC'97).
This bit is set and cleared by software.
0: Interrupt is disabled
1: Interrupt is enabled
When the interrupt is enabled, the audio block detects in the slot 0 (tag0) of the AC'97 frame if the Codec connected to this line is ready or not. If it is not ready, the CNRDY flag in the SAI_xSR register is set and an interruption i generated.
This bit has a meaning only if the AC'97 mode is selected through PRTCFG[1:0] bits and the audio block is operates as a receiver.

Bit 3 **FREQIE**: FIFO request interrupt enable.
This bit is set and cleared by software.
0: Interrupt is disabled
1: Interrupt is enabled
When this bit is set, an interrupt is generated if the FREQ bit in the SAI_xSR register is set.
Since the audio block defaults to operate as a transmitter after reset, the MODE bit must be configured before setting FREQIE to avoid a parasitic interruption in receiver mode,

Bit 2 **WCKCFGIE**: Wrong clock configuration interrupt enable.
This bit is set and cleared by software.
0: Interrupt is disabled
1: Interrupt is enabled
This bit is taken into account only if the audio block is configured as a master (MODE[1] = 0) and NODIV = 0.
It generates an interrupt if the WCKCFG flag in the SAI_xSR register is set.
Note: This bit is used only in TDM mode and is meaningless in other modes.

Bit 1 **MUTEDETIE**: Mute detection interrupt enable.
This bit is set and cleared by software.
0: Interrupt is disabled
1: Interrupt is enabled
When this bit is set, an interrupt is generated if the MUTEDET bit in the SAI_xSR register is set.
This bit has a meaning only if the audio block is configured in receiver mode.

Bit 0 **OVRUDRIE**: Overrun/underrun interrupt enable.
This bit is set and cleared by software.
0: Interrupt is disabled
1: Interrupt is enabled
When this bit is set, an interrupt is generated if the OVRUDR bit in the SAI_xSR register is set.

38.6.7 Status register (SAI_ASR / SAI_BSR)

Address offset: block A: 0x018

Address offset: block B: 0x038

Reset value: 0x0000 0008

31	30	29	28	27	26	25	24	23	22	21	20	19	18	17	16
Res.	Res.	Res.	Res.	Res.	Res.	Res.	Res.	Res.	Res.	Res.	Res.	Res.	FLVL		
													r	r	r

15	14	13	12	11	10	9	8	7	6	5	4	3	2	1	0
Res.	Res.	Res.	Res.	Res.	Res.	Res.	Res.	Res.	LFSDET	AFSDET	CNRDY	FREQ	WCKCFG	MUTEDET	OVRUDR
									r	r	r	r	r	r	r

Bits 31:19 Reserved, always read as 0.

Bits 18:16 **FLVL**: FIFO level threshold.

This bit is read only. The FIFO level threshold flag is managed only by hardware and its setting depends on SAI block configuration (transmitter or receiver mode).
If the SAI block is configured as transmitter:
000: FIFO empty
001: FIFO <= ¼ but not empty
010: ¼ < FIFO <= ½
011: ½ < FIFO <= ¾
100: ¾ < FIFO but not full
101: FIFO full
If SAI block is configured as receiver:
000: FIFO empty
001: FIFO < ¼ but not empty
010: ¼ <= FIFO < ½
011: ½ =< FIFO < ¾
100: ¾ =< FIFO but not full
101: FIFO full

Bits 15:7 Reserved, always read as 0.

Bit 6 **LFSDET**: Late frame synchronization detection.

This bit is read only.
0: No error.
1: Frame synchronization signal is not present at the right time.
This flag can be set only if the audio block is configured in slave mode.
It is not used in AC'97 or SPDIF mode.
It can generate an interrupt if LFSDETIE bit is set in the SAI_xIM register.
This flag is cleared when the software sets bit CLFSDET in SAI_xCLRFR register

Bit 5 **AFSDET**: Anticipated frame synchronization detection.

This bit is read only.
0: No error.
1: Frame synchronization signal is detected earlier than expected.
This flag can be set only if the audio block is configured in slave mode.
It is not used in AC'97 or SPDIF mode.
It can generate an interrupt if AFSDETIE bit is set in SAI_xIM register.
This flag is cleared when the software sets CAFSDET bit in SAI_xCLRFR register.

Bit 4 **CNRDY**: Codec not ready.

This bit is read only.
0: External AC'97 Codec is ready
1: External AC'97 Codec is not ready
This bit is used only when the AC'97 audio protocol is selected in the SAI_xCR1 register and configured in receiver mode.
It can generate an interrupt if CNRDYIE bit is set in SAI_xIM register.
This flag is cleared when the software sets CCNRDY bit in SAI_xCLRFR register.

Bit 3 **FREQ**: FIFO request.

This bit is read only.

0: No FIFO request.

1: FIFO request to read or to write the SAI_xDR.

The request depends on the audio block configuration:

– If the block is configured in transmission mode, the FIFO request is related to a write request operation in the SAI_xDR.

– If the block configured in reception, the FIFO request related to a read request operation from the SAI_xDR.

This flag can generate an interrupt if FREQIE bit is set in SAI_xIM register.

Bit 2 **WCKCFG**: Wrong clock configuration flag.

This bit is read only.

0: Clock configuration is correct

1: Clock configuration does not respect the rule concerning the frame length specification defined in *Section 38.4.5: Frame synchronization* (configuration of FRL[7:0] bit in the SAI_xFRCR register)

This bit is used only when the audio block operates in master mode (MODE[1] = 0) and NODIV = 0.

It can generate an interrupt if WCKCFGIE bit is set in SAI_xIM register.

This flag is cleared when the software sets CWCKCFG bit in SAI_xCLRFR register.

Bit 1 **MUTEDET**: Mute detection.

This bit is read only.

0: No MUTE detection on the SD input line

1: MUTE value detected on the SD input line (0 value) for a specified number of consecutive audio frame

This flag is set if consecutive 0 values are received in each slot of a given audio frame and for a consecutive number of audio frames (set in the MUTECNT bit in the SAI_xCR2 register).

It can generate an interrupt if MUTEDETIE bit is set in SAI_xIM register.

This flag is cleared when the software sets bit CMUTEDET in the SAI_xCLRFR register.

Bit 0 **OVRUDR**: Overrun / underrun.

This bit is read only.

0: No overrun/underrun error.

1: Overrun/underrun error detection.

The overrun and underrun conditions can occur only when the audio block is configured as a receiver and a transmitter, respectively.

It can generate an interrupt if OVRUDRIE bit is set in SAI_xIM register.

This flag is cleared when the software sets COVRUDR bit in SAI_xCLRFR register.

38.6.8 Clear flag register (SAI_ACLRFR / SAI_BCLRFR)

Address offset: block A: 0x01C

Address offset: block B: 0x03C

Reset value: 0x0000 0000

31	30	29	28	27	26	25	24	23	22	21	20	19	18	17	16
Res.	Res.	Res.	Res.	Res.	Res.	Res.	Res.	Res.	Res.	Res.	Res.	Res.	Res.	Res.	Res.

15	14	13	12	11	10	9	8	7	6	5	4	3	2	1	0
Res.	Res.	Res.	Res.	Res.	Res.	Res.	Res.	Res.	CLFSDET	CAFSDET	CCNRDY	Res.	CWCKCFG	CMUTE DET	COVRUD R
									w	w	w		w	w	w

Bits 31:7 Reserved, always read as 0.

Bit 6 **CLFSDET**: Clear late frame synchronization detection flag.
This bit is write only.
Programming this bit to 1 clears the LFSDET flag in the SAI_xSR register.
This bit is not used in AC'97 or SPDIF mode
Reading this bit always returns the value 0.

Bit 5 .**CAFSDET**: Clear anticipated frame synchronization detection flag.
This bit is write only.
Programming this bit to 1 clears the AFSDET flag in the SAI_xSR register.
It is not used in AC'97 or SPDIF mode.
Reading this bit always returns the value 0.

Bit 4 **CCNRDY**: Clear Codec not ready flag.
This bit is write only.
Programming this bit to 1 clears the CNRDY flag in the SAI_xSR register.
This bit is used only when the AC'97 audio protocol is selected in the SAI_xCR1 register.
Reading this bit always returns the value 0.

Bit 3 Reserved, always read as 0.

Bit 2 **CWCKCFG**: Clear wrong clock configuration flag.
This bit is write only.
Programming this bit to 1 clears the WCKCFG flag in the SAI_xSR register.
This bit is used only when the audio block is set as master (MODE[1] = 0) and NODIV = 0 in the SAI_xCR1 register.
Reading this bit always returns the value 0.

Bit 1 **CMUTEDET**: Mute detection flag.
This bit is write only.
Programming this bit to 1 clears the MUTEDET flag in the SAI_xSR register.
Reading this bit always returns the value 0.

Bit 0 **COVRUDR**: Clear overrun / underrun.
This bit is write only.
Programming this bit to 1 clears the OVRUDR flag in the SAI_xSR register.
Reading this bit always returns the value 0.

38.6.9 Data register (SAI_ADR / SAI_BDR)

Address offset: block A: 0x020

Address offset: block B: 0x040

Reset value: 0x0000 0000

31	30	29	28	27	26	25	24	23	22	21	20	19	18	17	16
DATA[31:16]															
rw	rw	rw	rw	rw	rw	rw	rw	rw	rw	rw	rw	rw	rw	rw	rw
15	14	13	12	11	10	9	8	7	6	5	4	3	2	1	0
DATA[15:0]															
rw	rw	rw	rw	rw	rw	rw	rw	rw	rw	rw	rw	rw	rw	rw	rw

Bits 31:0 **DATA[31:0]**: Data

A write to this register loads the FIFO provided the FIFO is not full.
A read from this register empties the FIFO if the FIFO is not empty.

38.6.10 SAI register map

The following table summarizes the SAI registers.

Table 180. SAI register map and reset values

Offset	Register and reset value	31	30	29	28	27	26	25	24	23	22	21	20	19	18	17	16	15	14	13	12	11	10	9	8	7	6	5	4	3	2	1	0
0x0000	SAI_GCR	Res.	Res.	Res.	Res.	Res.	Res.	Res.	Res.	Res.	Res.	Res.	Res.	Res.	Res.	Res.	Res.	Res.	Res.	Res.	Res.	Res.	Res.	Res.	Res.	Res.	Res.	SYNCOUT[1:0]		Res.	Res.	Res.	Res.
	Reset value																											0	0				
0x0004 or 0x0024	SAI_xCR1	Res.	Res.	Res.	Res.	Res.	Res.	Res.	Res.	MCJDIV[3:0]				NODIV	Res.	DMAEN	SAIXEN	Res.	Res.	OUTDRIV	MONO	SYNCEN[1:0]		CKSTR	LSBFIRST	DS[2:0]			Res.	PRTCFG[1:0]		MODE[1:0]	
	Reset value									0	0	0	0	0		0	0			0	0	0	0	0	0	0	1	0		0	0	0	0
0x0008 or 0x0028	SAI_xCR2	Res.	Res.	Res.	Res.	Res.	Res.	Res.	Res.	Res.	Res.	Res.	Res.	Res.	Res.	Res.	Res.	COMP[1:0]		CPL	MUTECN[5:0]						MUTE VAL	MUTE	TRIS	FFLUS	FTH		
	Reset value																	0	0	0	0	0	0	0	0	0	0	0	0	0	0	0	0
0x000C or 0x002C	SAI_xFRCR	Res.	Res.	Res.	Res.	Res.	Res.	Res.	Res.	Res.	Res.	Res.	Res.	Res.	FSOFF	FSPOL	FSDEF	Res.	FSALL[6:0]							FRL[7:0]							
	Reset value														0	0	0		0	0	0	0	0	0	0	0	0	0	0	0	1	1	1
0x0010 or 0x0030	SAI_xSLOTR	SLOTEN[15:0]																Res.	Res.	Res.	Res.	NBSLOT[3:0]				SLOTSZ[1:0]		Res.	FBOFF[4:0]				
	Reset value	0	0	0	0	0	0	0	0	0	0	0	0	0	0	0	0					0	0	0	0	0	0		0	0	0	0	0
0x0014 or 0x0034	SAI_xIM	Res.	Res.	Res.	Res.	Res.	Res.	Res.	Res.	Res.	Res.	Res.	Res.	Res.	Res.	Res.	Res.	Res.	Res.	Res.	Res.	Res.	Res.	Res.	Res.	Res.	LFSDET	AFSDETIE	CNRDYIE	FREQIE	WCKCFG	MUTEDET	OVRUDRIE
	Reset value																										0	0	0	0	0	0	0
0x0018 or 0x0038	SAI_xSR	Res.	Res.	Res.	Res.	Res.	Res.	Res.	Res.	Res.	Res.	Res.	Res.	Res.	FLVL[2:0]			Res.	Res.	Res.	Res.	Res.	Res.	Res.	Res.	Res.	LFSDET	AFSDET	CNRDY	FREQ	WCKCFG	MUTEDET	OVRUDR
	Reset value														0	0	0										0	0	0	0	1	0	0

Table 180. SAI register map and reset values (continued)

Offset	Register and reset value	31	30	29	28	27	26	25	24	23	22	21	20	19	18	17	16	15	14	13	12	11	10	9	8	7	6	5	4	3	2	1	0
0x001C or 0x003C	SAI_xCLRFR	Res.	Res.	Res.	Res.	Res.	Res.	Res.	Res.	Res.	Res.	Res.	Res.	Res.	Res.	Res.	Res.	Res.	Res.	Res.	Res.	Res.	Res.	Res.	Res.	Res.	LFSDET	CAFSDET	CNRDY	Res.	WCKCFG	MUTEDET	OVRUDR
	Reset value																										0	0	0		0	0	0
0x0020 or 0x0040	SAI_xDR	DATA[31:0]																															
	Reset value	0	0	0	0	0	0	0	0	0	0	0	0	0	0	0	0	0	0	0	0	0	0	0	0	0	0	0	0	0	0	0	0

Refer to *Section 2.2.2 on page 62* for the register boundary addresses.

39 Single Wire Protocol Master Interface (SWPMI)

39.1 Introduction

The Single Wire Protocol Master Interface (SWPMI) is the master interface corresponding to the Contactless front-end (CLF) defined in the ETSI TS 102 613 technical specification.

The principle of the Single wire protocol (SWP) is based on the transmission of digital information in full duplex mode:

- S1 signal (from Master to Slave) is transmitted by a digital modulation (L or H) in the voltage domain (refer to *Figure 425: S1 signal coding*),
- S2 signal (from Slave to Master) is transmitted by a digital modulation (L or H) in the current domain (refer to *Figure 426: S2 signal coding*).

Figure 425. S1 signal coding

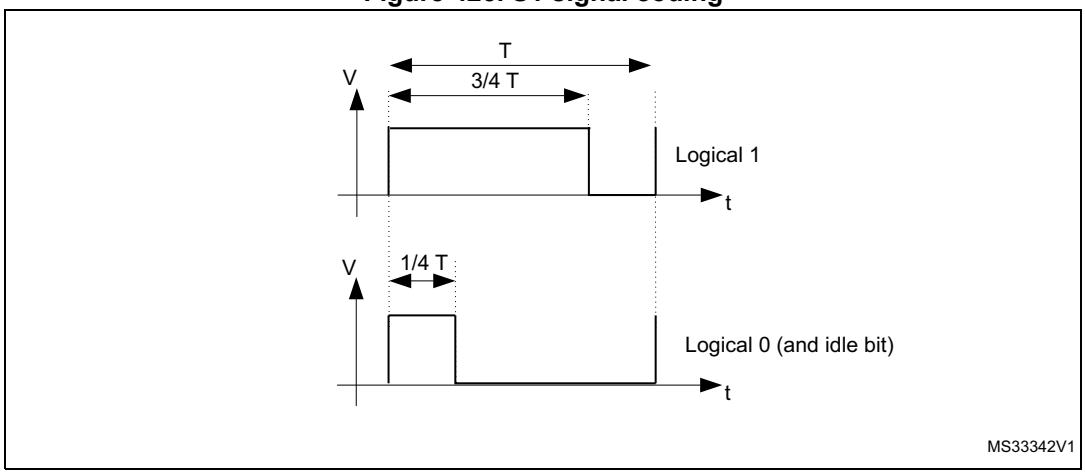

Figure 426. S2 signal coding

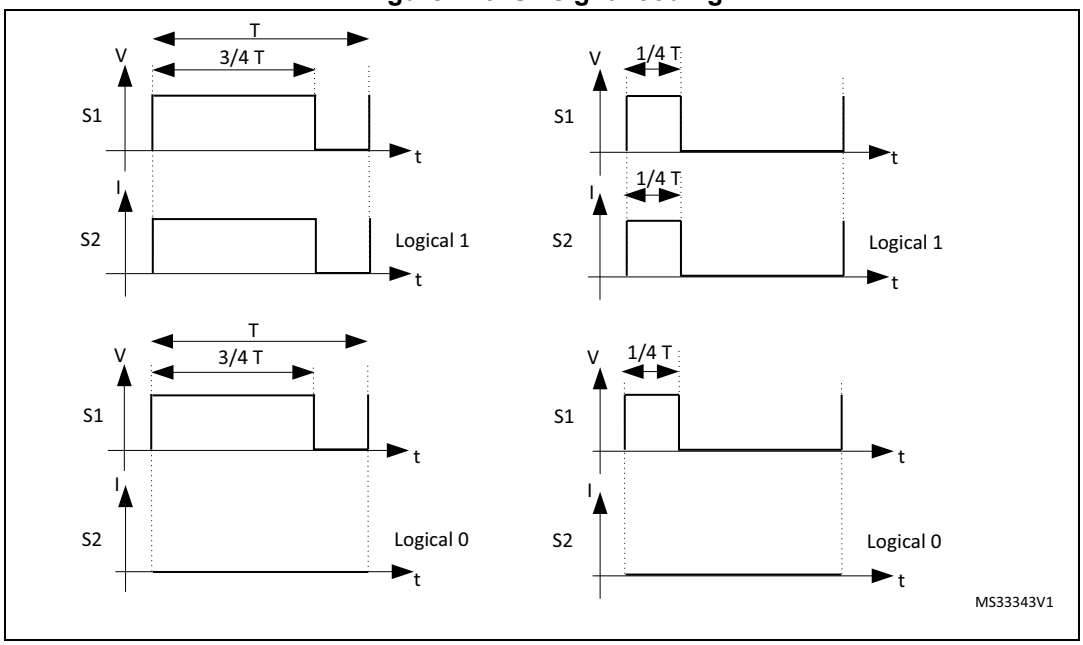

39.2 SWPMI main features

The SWPMI module main features are the following (see *Figure 39.3.3: SWP bus states*):

- Full-duplex communication mode
- Automatic SWP bus state management
- Automatic handling of Start of frame (SOF)
- Automatic handling of End of frame (EOF)
- Automatic handling of stuffing bits
- Automatic CRC-16 calculation and generation in transmission
- Automatic CRC-16 calculation and checking in reception
- 32-bit Transmit data register
- 32-bit Receive data register
- Multi software buffer mode for efficient DMA implementation and multi frame buffering
- Configurable bit-rate up to 2 Mbit/s
- Configurable interrupts
- CRC error, underrun, overrun flags
- Frame reception and transmission complete flags
- Slave resume detection flag
- Loopback mode for test purpose
- Embedded SWPMI_IO transceiver compliant with ETSI TS 102 613 technical specification
- Dedicated mode to output SWPMI_RX, SWPMI_TX and SWPMI_SUSPEND signals on GPIOs, in case of external transceiver connection

39.3 SWPMI functional description

39.3.1 SWPMI block diagram

Figure 427. SWPMI block diagram

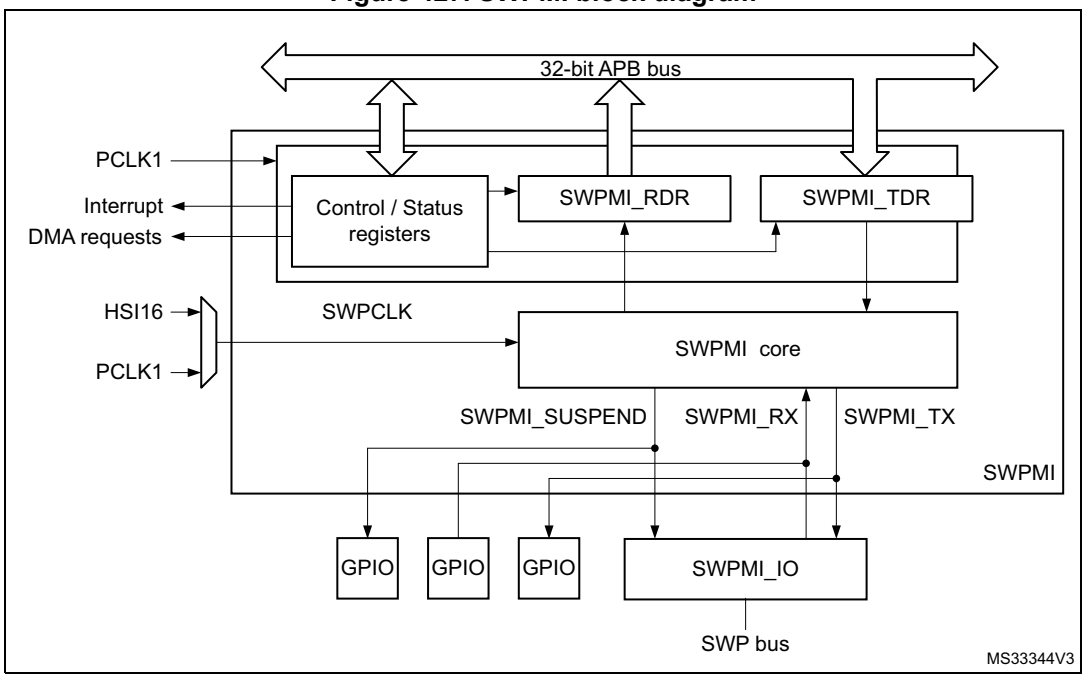

Refer to the bit SWPMI1SEL in *Section 6.4.27: Peripherals independent clock configuration register (RCC_CCIPR)* to select the SWPCLK (SWPMI core clock source).

Note: In order to support the exit from Stop mode by a RESUME by slave, it is mandatory to select HSI16 for SWPCLK. If this feature is not required, PCLK1 can be selected, and SWPMI must be disabled before entering the Stop mode.

39.3.2 SWP initialization and activation

The initialization and activation will set the SWPMI_IO state from low to high.

For Class B, i.e. V_{DD} is in the range [2.70 V to 3.30 V], the procedure is the following:

1. clear the SWP_CLASS bit in SWPMI_OR register,
2. configure SWPMI_IO as alternate function (refer to *Section 8: General-purpose I/Os (GPIO)*) to enable the SWPMI_IO transceiver,
3. wait for $t_{SWPSTART}$ Max (refer to product datasheet),
4. set SWPACT bit in SWPMI_CR register to ACTIVATE the SWP i.e. to move from DEACTIVATED to SUSPENDED.

For Class C, i.e. V_{DD} is in the range [1.62 V to 1.98 V], the procedure is the following:

1. set the SWP_CLASS bit in SWPMI_OR register,
2. configure SWPMI_IO as alternate function (refer to *Section 8: General-purpose I/Os (GPIO)*) to enable the SWPMI_IO transceiver,
3. set SWPACT bit in SWPMI_CR register to ACTIVATE the SWP i.e. to move from DEACTIVATED to SUSPENDED.

39.3.3 SWP bus states

The SWP bus can have the following states: DEACTIVATED, SUSPENDED, ACTIVATED.

Several transitions are possible:

- ACTIVATE: transition from DEACTIVATED to SUSPENDED state,
- SUSPEND: transition from ACTIVATED to SUSPENDED state,
- RESUME by master: transition from SUSPENDED to ACTIVATED state initiated by the master,
- RESUME by slave: transition from SUSPENDED to ACTIVATED state initiated by the slave,
- DEACTIVATE: transition from SUSPENDED to DEACTIVATED state.

ACTIVATE

During and just after reset, the SWPMI_IO is configured in analog mode. Refer to *Section 39.3.2: SWP initialization and activation* to activate the SWP bus.

SUSPEND

The SWP bus stays in the ACTIVATED state as long as there is a communication with the slave, either in transmission or in reception. The SWP bus switches back to the SUSPENDED state as soon as there is no more transmission or reception activity, after 7 idle bits.

RESUME by master

Once the SWPMI is enabled, the user can request a SWPMI frame transmission. The SWPMI first sends a transition sequence and 8 idle bits (RESUME by master) before starting the frame transmission. The SWP moves from the SUSPENDED to ACTIVATED state after the RESUME by master (refer to *Figure 428: SWP bus states*).

RESUME by slave

Once the SWPMI is enabled, the SWP can also move from the SUSPENDED to ACTIVATED state if the SWPMI receives a RESUME from the slave. The RESUME by slave sets the SRF flag in the SWPMI_ISR register.

DEACTIVATE

Deactivate request

If no more communication is required, and if SWP is in the SUSPENDED mode, the user can request to switch the SWP to the DEACTIVATED mode by disabling the SWPMI peripheral. The software must set DEACT bit in the SWPMI_CR register in order to request the DEACTIVATED mode. If no RESUME by slave is detected by SWPMI, the DEACTF flag is set in the SWPMI_ISR register and the SWPACT bit is cleared in the SWPMI_ICR register. In case a RESUME by slave is detected by the SWPMI while the software is setting DEACT bit, the SRF flag is set in the SWPMI_ISR register, DEACTF is kept cleared, SWPACT is kept set and DEACT bit is cleared.

In order to activate SWP again, the software must clear DEACT bit in the SWPMI_CR register before setting SWPACT bit.

Deactivate

In order to switch the SWP to the DEACTIVATED mode immediately, ignoring any possible incoming RESUME by slave, the user must clear SWPACT bit in the SWPMI_CR register.

Note: In order to further reduce current consumption once SWPACT bit is cleared, configure the SWPMI_IO port as output push pull low in GPIO controller (refer to Section 8: General-purpose I/Os (GPIO)).

Figure 428. SWP bus states

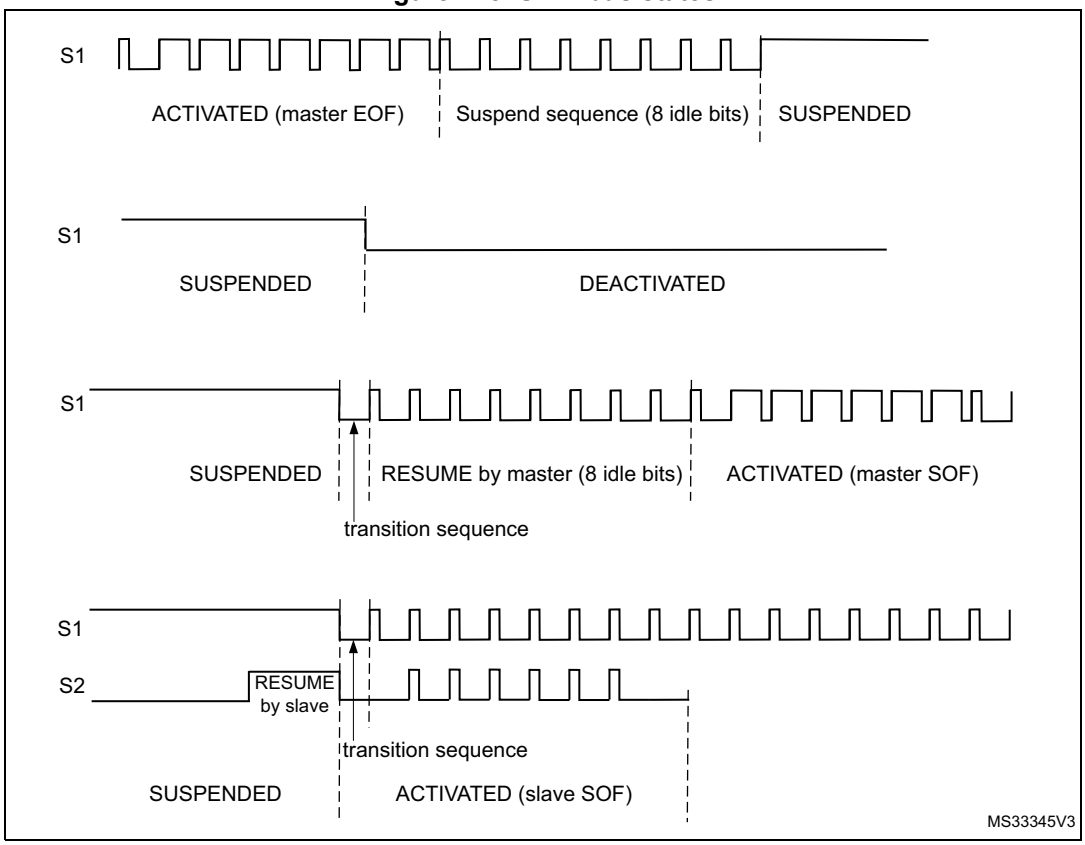

39.3.4 SWPMI_IO (internal transceiver) bypass

A SWPMI_IO (transceiver), compliant with ETSI TS 102 613 technical specification, is embedded in the microcontroller. Nevertheless, this is possible to bypass it by setting SWP_TBYP bit in SWPMI_OR register. In this case, the SWPMI_IO is disabled and the SWPMI_RX, SWPMI_TX and SWPMI_SUSPEND signals are available as alternate functions on three GPIOs (refer to “Pinouts and pin description” in product datasheet). This configuration is selected to connect an external transceiver.

39.3.5 SWPMI Bit rate

The bit rate must be set in the SWPMI_BRR register, according to the following formula:

$F_{SWP} = F_{SWPCLK} / ((BR[5:0]+1)x4)$

Note: The maximum bitrate is 2 Mbit/s.

39.3.6 SWPMI frame handling

The SWP frame is composed of a Start of frame (SOF), a Payload from 1 to 30 bytes, a 16-bit CRC and an End of frame (EOF) (Refer to *Figure 429: SWP frame structure*).

Figure 429. SWP frame structure

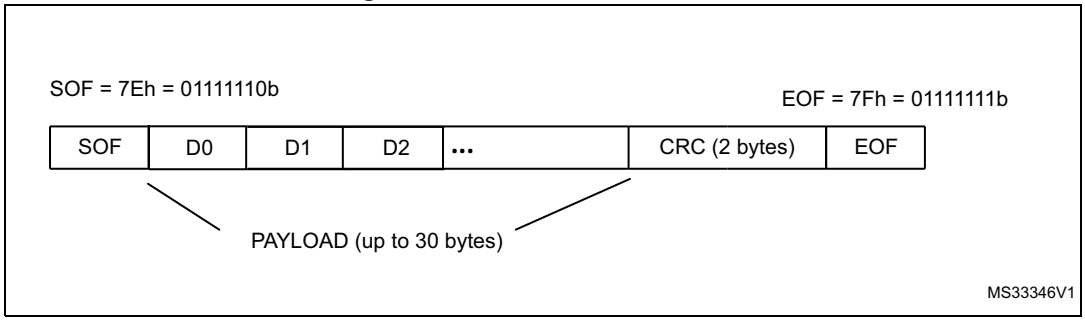

The SWPMI embeds one 32-bit data register for transmission (SWPMI_TDR), and one 32-bit data register for reception (SWPMI_RDR).

In transmission, the SOF insertion, the CRC calculation and insertion, and the EOF insertion are managed automatically by the SWPMI. The user only has to provide the Payload content and size. A frame transmission starts as soon as data is written into the SWPMI_TDR register. Dedicated flags indicate an empty transmit data register and a complete frame transmission event.

In reception, the SOF deletion, the CRC calculation and checking, and the EOF deletion are managed automatically by the SWPMI. The user only has to read the Payload content and size. Dedicated flags indicate a full receive data register, a complete frame reception and possibly CRC error events.

The stuffing bits insertion (in transmission) and stuffing bits deletion (in reception) are managed automatically by the SWPMI core. These operations are transparent for the user.

39.3.7 Transmission procedure

Before starting any frame transmission, the user must activate the SWP. Refer to *Section 39.3.2: SWP initialization and activation*.

There are several possible software implementations for a frame transmission: No software buffer mode, Single software buffer mode, and Multi software buffer mode.

The software buffer usage requires the use of a DMA channel to transfer data from the software buffer in the RAM memory to the transmit data register in the SWPMI peripheral.

No software buffer mode

This mode does not require the use of DMA. The SWP frame transmission handling is done by polling status flags in the main loop or inside the SWPMI interrupt routine. There is a 32-bit transmit data register (SWPMI_TDR) in the SWPMI, thus writing to this register will trigger the transmission of up to 4 bytes.

The No software buffer mode is selected by clearing TXDMA bit in the SWPMI_CR register.

The frame transmission is started by the first write to the SWPMI_TDR register. The low significant byte of the first 32-bit word (bits [7:0])written into the SWPMI_TDR register) indicates the number of data bytes in the payload, and the 3 other bytes of this word must

contain the first 3 bytes of the payload (bits [15:8] contain the first byte of the payload, bits [23:16] the second byte and bits [31:24] the third byte). Then, the following writes to the SWPMI_TDR register will only contain the following payload data bytes, up to 4 for each write.

Note: The low significant byte of the first 32-bit word written into the SWPMI_TDR register is coding the number of data bytes in the payload. This number could be from 1 to 30. Any other value in the low significant byte will be ignored and the transmission will not start.

Writing to the SWPMI_TDR register will induce the following actions:

- Send the transition sequence and 8 idle bits (RESUME by master) if the SWP bus state is SUPENDED (this will not happen if the SWP bus state is already ACTIVATED),
- Send a Start of frame (SOF),
- Send the payload according to the SWPMI_TRD register content. If the number of bytes in the payload is greater than 3, the SWPMI_TDR needs to be refilled by software, each time the TXE flag in the SWPMI_ISR register is set, and as long as the TXBEF flag is not set in the SWPMI_ISR register,
- Send the 16-bit CRC, automatically calculated by the SWPMI core,
- Send an End of frame (EOF).

The TXE flag is cleared automatically when the software is writing to the SWPMI_TDR register.

Once the complete frame is sent, provided that no other frame transmission has been requested (i.e. SWPMI_TDR has not been written again after the TXBEF flag setting), TCF and SUSP flags are set in the SWPMI_ISR register 7 idle bits after the EOF transmission, and an interrupt is generated if TCIE bit is set in the SWPMI_IER register (refer to *Figure 430: SWPMI No software buffer mode transmission*).

Figure 430. SWPMI No software buffer mode transmission

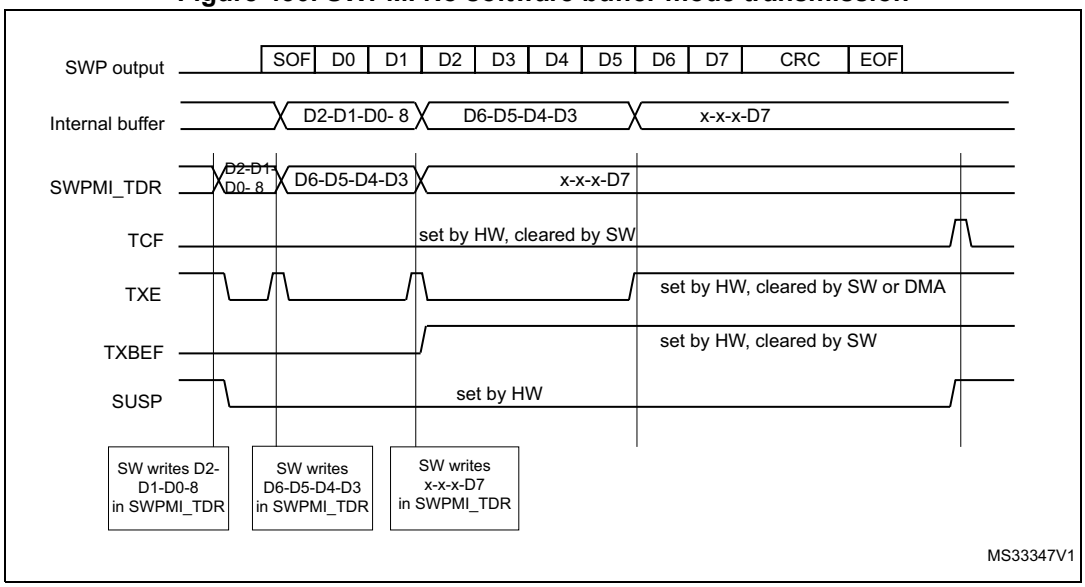

If another frame transmission is requested before the end of the EOF transmission, the TCF flag is not set and the frame will be consecutive to the previous one, with only one idle bit in between (refer to *Figure 431: SWPMI No software buffer mode transmission, consecutive frames*).

Figure 431. SWPMI No software buffer mode transmission, consecutive frames

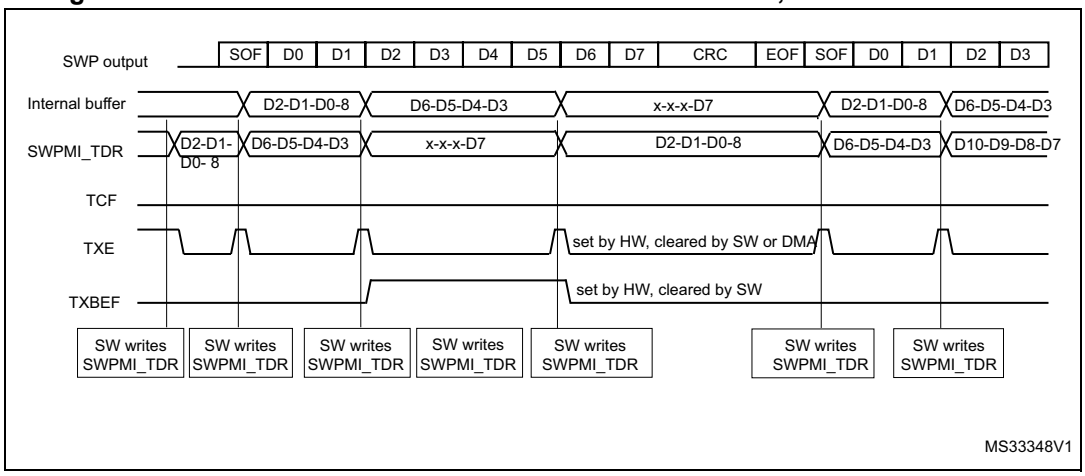

Single software buffer mode

This mode allows to transmit a complete SWP frame without a CPU intervention, using the DMA. The DMA will refill the 32-bit SWPMI_TDR register, and the software can poll the end of the frame transmission using the SWPMI_TXBEF flag.

The Single software buffer mode is selected by setting TXDMA bit and clearing TXMODE bit in the SWPMI_CR register.

The DMA channel or stream must be configured in following mode (refer to DMA section):

- memory to memory mode disabled,
- memory increment mode enabled,
- memory size set to 32-bit,
- peripheral size set to 32-bit,
- peripheral increment mode disabled,
- circular mode disabled,
- data transfer direction set to read from memory.
- the number of words to be transfered must be set according to the SWP frame length,
- the source address is the SWP frame buffer in RAM,
- the destination address is the SWPMI_TDR register.

Then the user must:

1. Set TXDMA bit in the SWPMI_CR register,
2. Set TXBEIE bit in the SWPMI_IER register,
3. Fill the buffer in the RAM memory (with the number of data bytes in the payload on the least significant byte of the first word),
4. Enable stream or channel in DMA module to start DMA transfer and frame transmission.

A DMA request is issued by SWPMI when TXE flag in SWPMI_ISR is set. The TXE flag is cleared automatically when the DMA is writing to the SWPMI_TDR register.

In the SWPMI interrupt routine, the user must check TXBEF bit in the SWPMI_ISR register. If it is set, and if another frame needs to be transmitted, the user must:

1. Disable stream or channel in DMA module
2. Update the buffer in the RAM memory with the content of the next frame to be sent
3. Configure the total number of words to be transferred in DMA module
4. Enable stream or channel in DMA module to start next frame transmission
5. Set CTXBEF bit in the SWPMI_ICR register to clear the TXBEF flag

Multi software buffer mode

This mode allows to work with several frame buffers in the RAM memory, in order to ensure a continuous transmission, keeping a very low CPU load, and allowing more latency for buffer update by software thanks to the DMA. The software can check the DMA counters at any time and update SWP frames accordingly in the RAM memory.

The Multi software buffer mode must be used in combination with DMA in circular mode.

Each transmission buffer in the RAM memory must have a fixed length of eight 32-bit words, whatever the number of bytes in the SWP frame payload. The transmission buffers in the RAM memory must be filled by the software, keeping an offset of 8 between two consecutive ones. The first data byte of the buffer is the number of bytes of the frame payload. See the buffer example in *Figure 432: SWPMI Multi software buffer mode transmission*

The Multi software buffer mode is selected by setting both TXDMA and TXMODE bits in SWPMI_CR register.

For example, in order to work with 4 transmission buffers, the user must configure the DMA as follows:

The DMA channel or stream must be configured in following mode (refer to DMA section):

- memory to memory mode disabled,
- memory increment mode enabled,
- memory size set to 32-bit,
- peripheral size set to 32-bit,
- peripheral increment mode disabled,
- circular mode enabled,
- data transfer direction set to read from memory,
- the number of words to be transfered must be set to 32 (8 words per buffer),
- the source address is the buffer1 in RAM,
- the destination address is the SWPMI_TDR register.

Then, the user must:

1. Set TXDMA in the SWPMI_CR register
2. Set TXBEIE in the SWPMI_IER register
3. Fill buffer1, buffer2, buffer3 and buffer4 in the RAM memory (with the number of data bytes in the payload on the least significant byte of the first word)
4. Enable stream or channel in DMA module to start DMA.

In the SWPMI interrupt routine, the user must check TXBEF bit in the SWPMI_ISR register. If it is set, the user must set CTXBEF bit in SWPMI_ICR register to clear TXBEF flag and the user can update buffer1 in the RAM memory.

In the next SWPMI interrupt routine occurrence, the user will update buffer2, and so on.

The Software can also read the DMA counter (number of data to transfer) in the DMA registers in order to retrieve the frame which has already been transferred from the RAM memory and transmitted. For example, if the software works with 4 transmission buffers, and if the DMA counter equals 17, it means that two buffers are ready for updating in the RAM area. This is useful in case several frames are sent before the software can handle the SWPMI interrupt. If this happens, the software will have to update several buffers.

When there are no more frames to transmit, the user must disable the circular mode in the DMA module. The transmission will stop at the end of the buffer4 transmission.

If the transmission needs to stop before (for example at the end of buffer2), the user must set the low significant byte of the first word to 0 in buffer3 and buffer4.

TXDMA bit in the SWPMI_CR register will be cleared by hardware as soon as the number of data bytes in the payload is read as 0 in the least significant byte of the first word.

Figure 432. SWPMI Multi software buffer mode transmission

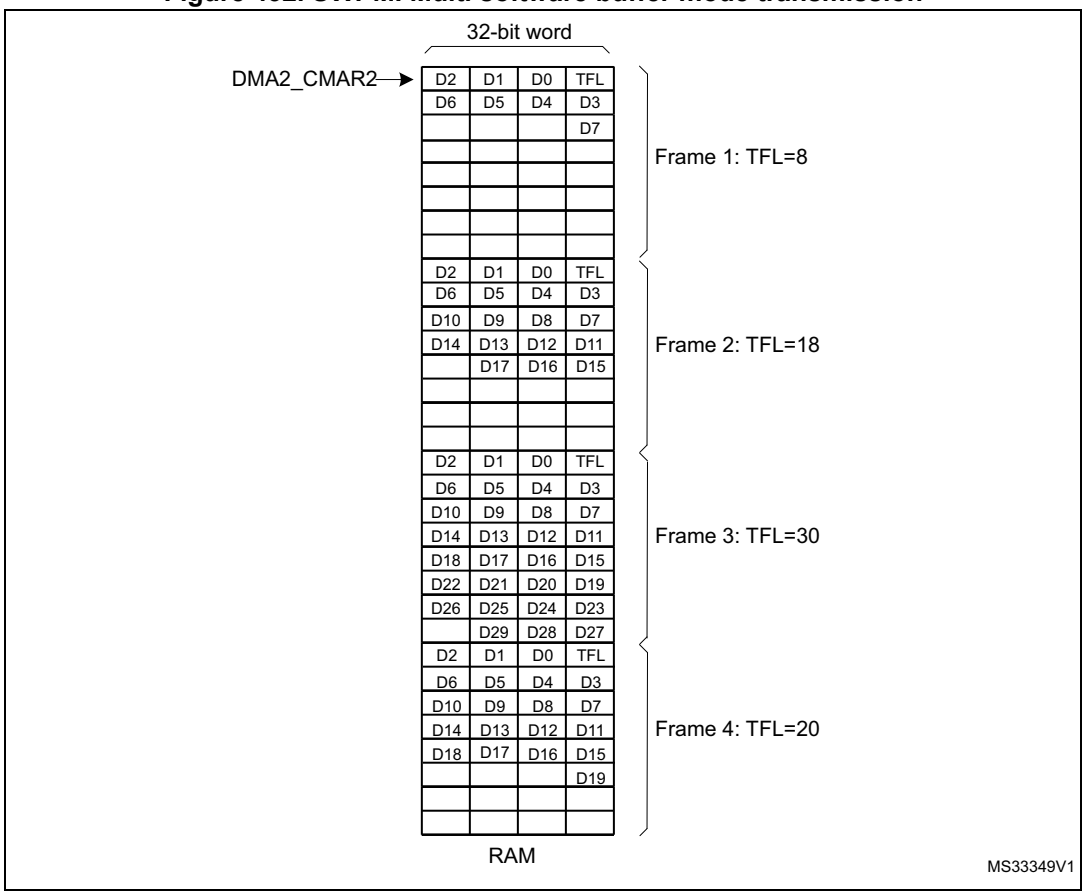

39.3.8 Reception procedure

Before starting any frame reception, the user must activate the SWP (refer to *Section 39.3.2: SWP initialization and activation*.

Once SWPACT bit is set in the SWPMI_CR register, a RESUME from slave state sets the SRF flag in the SWPMI_ISR register and automatically enables the SWPMI for the frame reception.

If the SWP bus is already in the ACTIVATED state (for example because a frame transmission is ongoing), the SWPMI core does not need any RESUME by slave state, and the reception can take place immediately.

There are several possible software implementations for a frame reception:

- No software buffer mode,
- Single software buffer mode,
- Multi software buffer mode.

The software buffer usage requires the use of a DMA channel to transfer data from the receive data register in the SWPMI peripheral to the software buffer in the RAM memory.

No software buffer mode

This mode does not require the use of DMA. The SWP frame reception handling is done by polling status flags in the main loop or inside the SWPMI interrupt routine. There is a 32-bit receive data register (SWPMI_RDR) in the SWPMI, allowing to receive up to 4 bytes before reading this register.

The No software buffer mode is selected by resetting RXDMA bit in the SWPMI_CR register.

Once a Start of frame (SOF) is received, the following bytes (payload) are stored in the SWPMI_RDR register. Once the SWPMI_RDR is full, the RXNE flag is set in SWPMI_ISR and an interrupt is generated if RIE bit is set in SWPMI_IER register. The user can read the SWPMI_RDR register and the RXNE flag is cleared automatically when the software is reading the SWPMI_RDR register.

Once the complete frame has been received, including the CRC and the End of frame (EOF), both RXNE and RXBFF flags are set in the SWPMI_ISR register. The user must read the last byte(s) of the payload in the SWPMI_RDR register and set CRXBFF flag in SWPMI_ICR in order to clear the RXBFF flag. The number of data bytes in the payload is available in the SWPMI_RFL register. Again, the RXNE flag is reset automatically when the software is reading the SWPMI_RDR register (refer to *Figure 433: SWPMI No software buffer mode reception*).

Reading the SWPMI_RDR register while RXNE is cleared will return 0.

Figure 433. SWPMI No software buffer mode reception

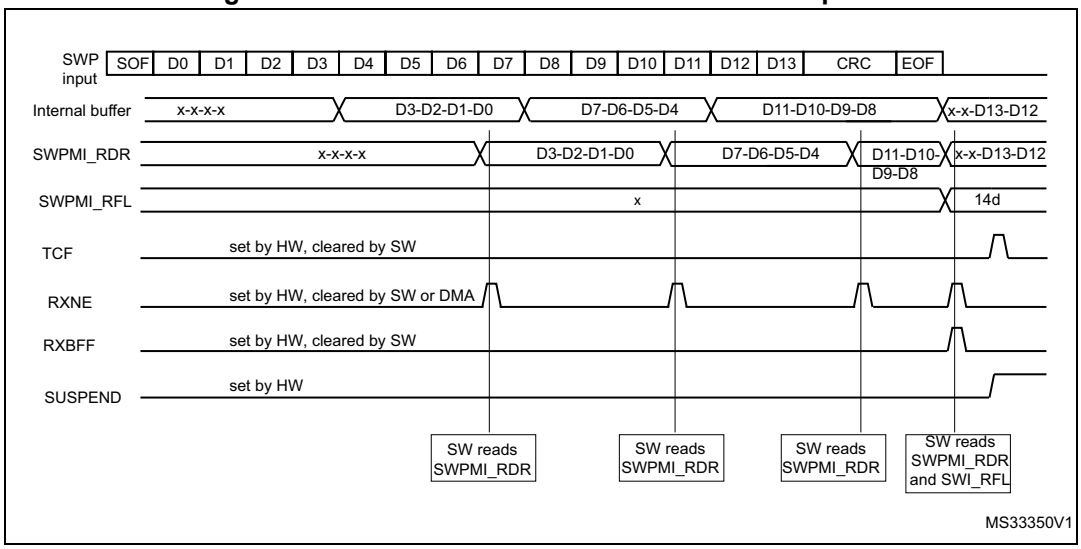

Single software buffer mode

This mode allows to receive a complete SWP frame without any CPU intervention using the DMA. The DMA transfers received data from the 32-bit SWPMI_RDR register to the RAM memory, and the software can poll the end of the frame reception using the SWPMI_RBFF flag.

The Single software buffer mode is selected by setting RXDMA bit and clearing RXMODE bit in the SWPMI_CR register.

The DMA must be configured as follows:

The DMA channel or stream must be configured in following mode (refer to DMA section):

- memory to memory mode disabled,
- memory increment mode enabled,
- memory size set to 32-bit,
- peripheral size set to 32-bit,
- peripheral increment mode disabled,
- circular mode disabled,
- data transfer direction set to read from peripheral,
- the number of words to be transfered must be set to 8,
- the source address is the SWPMI_RDR register,
- the destination address is the SWP frame buffer in RAM.

Then the user must:

1. Set RXDMA bit in the SWPMI_CR register
2. Set RXBFIE bit in the SWPMI_IER register
3. Enable stream or channel in DMA module.

A DMA request is issued by SWPMI when RXNE flag is set in SWPMI_ISR. The RXNE flag is cleared automatically when the DMA is reading the SWPMI_RDR register.

In the SWPMI interrupt routine, the user must check RXBFF bit in the SWPMI_ISR register. If it is set, the user must:

1. Disable stream or channel in DMA module
2. Read the number of bytes in the received frame payload in the SWPMI_RFL register
3. Read the frame payload in the RAM buffer
4. Enable stream or channel in DMA module
5. Set CRXBFF bit in the SWPMI_ICR register to clear RXBFF flag (refer to *Figure 434: SWPMI single software buffer mode reception*).

Figure 434. SWPMI single software buffer mode reception

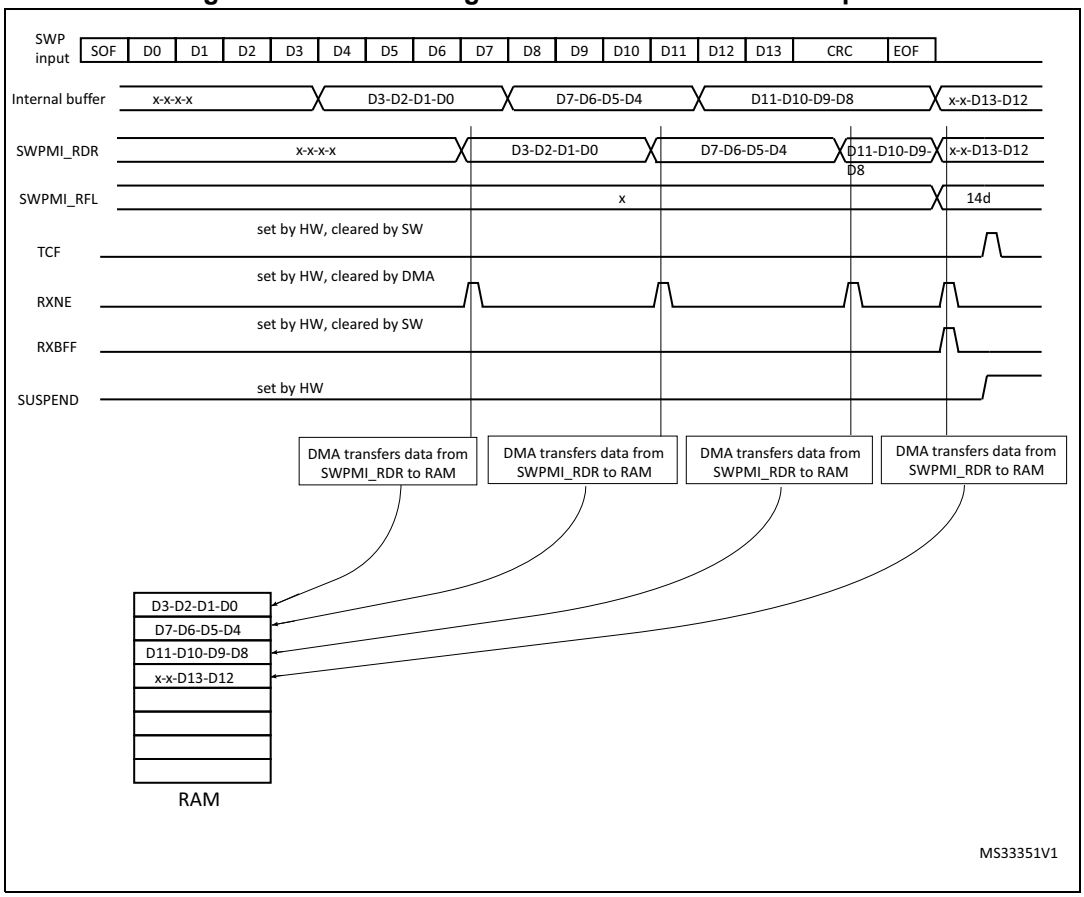

Multi software buffer mode

This mode allows to work with several frame buffers in the RAM memory, in order to ensure a continuous reception, keeping a very low CPU load, using the DMA. The frame payloads are stored in the RAM memory, together with the frame status flags. The software can check the DMA counters and status flags at any time to handle the received SWP frames in the RAM memory.

The Multi software buffer mode must be used in combination with the DMA in circular mode.

The Multi software buffer mode is selected by setting both RXDMA and RXMODE bits in SWPMI_CR register.

In order to work with n reception buffers in RAM, the DMA channel or stream must be configured in following mode (refer to DMA section):

- memory to memory mode disabled,
- memory increment mode enabled,
- memory size set to 32-bit,
- peripheral size set to 32-bit,
- peripheral increment mode disabled,
- circular mode enabled,
- data transfer direction set to read from peripheral,
- the number of words to be transfered must be set to 8 x n (8 words per buffer),
- the source address is the SWPMI_TDR register,
- the destination address is the buffer1 address in RAM

Then the user must:

1. Set RXDMA in the SWPMI_CR register
2. Set RXBFIE in the SWPMI_IER register
3. Enable stream or channel in the DMA module.

In the SWPMI interrupt routine, the user must check RXBFF in the SWPMI_ISR register. If it is set, the user must set CRXBFF bit in the SWPMI_ICR register to clear RXBFF flag and the user can read the first frame payload received in the first buffer (at the RAM address set in DMA2_CMAR1).

The number of data bytes in the payload is available in bits [23:16] of the last 8th word.

In the next SWPMI interrupt routine occurrence, the user will read the second frame received in the second buffer (address set in DMA2_CMAR1 + 8), and so on (refer to *Figure 435: SWPMI Multi software buffer mode reception*).

In case the application software cannot ensure to handle the SMPMI interrupt before the next frame reception, each buffer status is available in the most significant byte of the 8th buffer word:

- The CRC error flag (equivalent to RXBERF flag in the SWPMI_ISR register) is available in bit 24 of the 8th word. Refer to *Section 39.3.9: Error management* for an CRC error description.
- The receive overrun flag (equivalent to RXOVRF flag in the SWPMI_ISR register) is available in bit 25 of the 8th word. Refer to *Section 39.3.9: Error management* for an overrun error description.
- The receive buffer full flag (equivalent to RXBFF flag in the SWPMI_ISR register) is available in bit 26 of the 8th word.

In case of a CRC error, both RXBFF and RXBERF flags are set, thus bit 24 and bit 26 are set.

In case of an overrun, an overrun flag is set, thus bit 25 is set. The receive buffer full flag is set only in case of an overrun during the last word reception; then, both bit 25 and bit 26 are set for the current and the next frame reception.

The software can also read the DMA counter (number of data to transfer) in the DMA registers in order to retrieve the frame which has already been received and transferred into the RAM memory through DMA. For example, if the software works with 4 reception buffers,

and if the DMA counter equals 17, it means that two buffers are ready for reading in the RAM area.

In Multi software buffer reception mode, if the software is reading bits 24, 25 and 26 of the 8th word, it does not need to clear RXBERF, RXOVRF and RXBFF flags after each frame reception.

Figure 435. SWPMI Multi software buffer mode reception

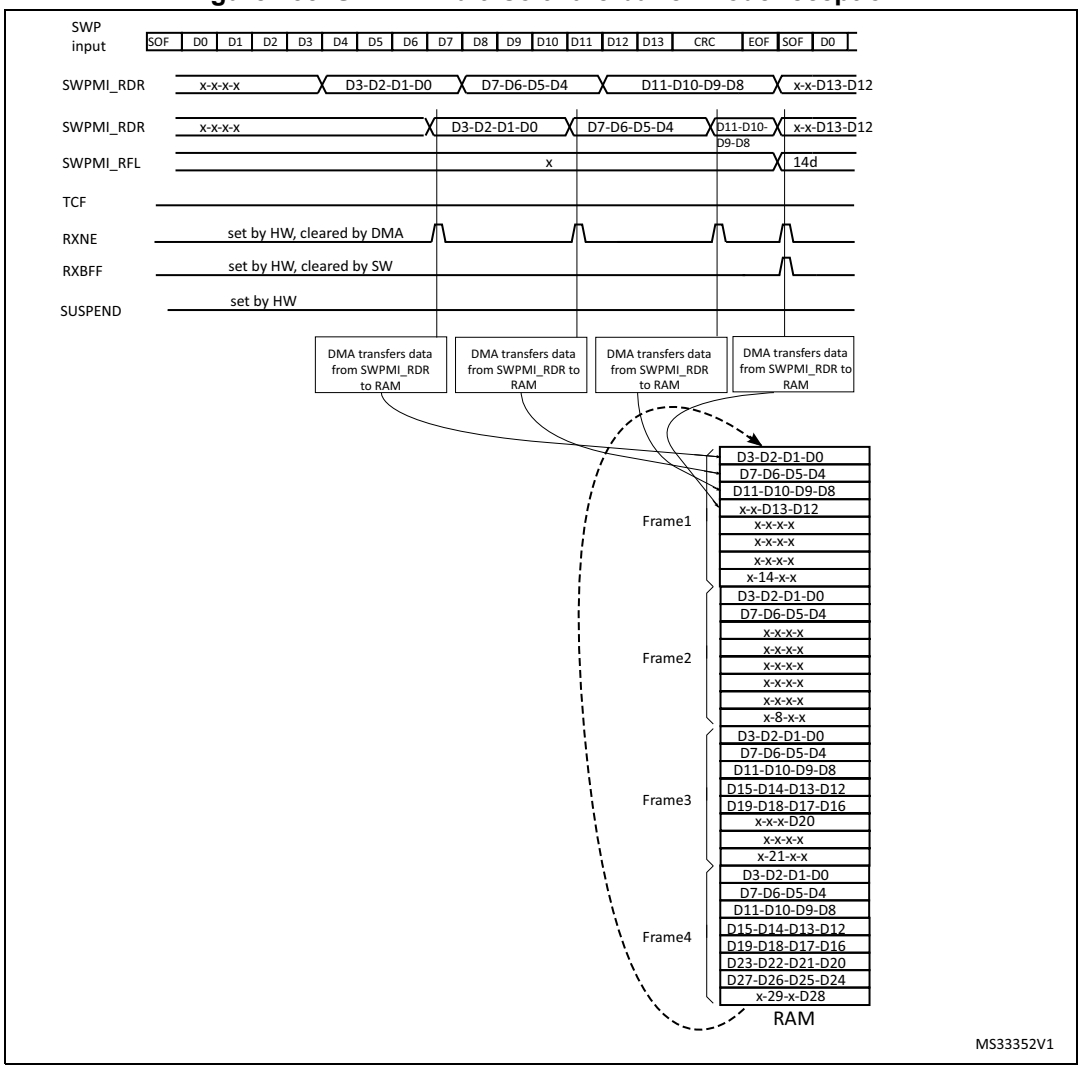

39.3.9 Error management

Underrun during payload transmission

During the transmission of the frame payload, a transmit underrun is indicated by the TXUNRF flag in the SWPMI_ISR register. An interrupt is generated if TXBUNREIE bit is set in the SWPMI_IER register.

If a transmit underrun occurs, the SWPMI stops the payload transmission and sends a corrupted CRC (the first bit of the first CRC byte sent is inverted), followed by an EOF. If DMA is used, TXDMA bit in the SWPMI_CR register is automatically cleared.

Any further write to the SWPMI_TDR register while TXUNRF is set will be ignored. The user must set CTXUNRF bit in the SWPMI_ICR register to clear TXUNRF flag.

Overrun during payload reception

During the reception of the frame payload, a receive overrun is indicated by RXOVRF flag in the SWPMI_ISR register. If a receive overrun occurs, the SWPMI does not update SWPMI_RDR with the incoming data. The incoming data will be lost.

The reception carries on up to the EOF and, if the overrun condition disappears, the RXBFF flag is set. When RXBFF flag is set, the user can check the RXOVRF flag. The user must set CRXOVRF bit in the SWPMI_ICR register to clear RXBOVRF flag.

If the user wants to detect the overrun immediately, RXBOVREIE bit in the SWPMI_IER register can be set in order to generate an interrupt as soon as the overrun occurs.

The RXOVRF flag is set at the same time as the RXNE flag, two SWPMI_RDR reads after the overrun event occurred. It indicates that at least one received byte was lost, and the loaded word in SWPMI_RDR contains the bytes received just before the overrun.

In Multi software buffer mode, if RXOVRF flag is set for the last word of the received frame, then the overrun bit (bit 25 of the 8th word) is set for both the current and the next frame.

CRC error during payload reception

Once the two CRC bytes have been received, if the CRC is wrong, the RXBERF flag in the SWPMI_ISR register is set after the EOF reception. An interrupt is generated if RXBEIE bit in the SWPMI_IER register is set (refer to*Figure 436: SWPMI single buffer mode reception with CRC error*).The user must set CRXBERF bit in SWPMI_ICR to clear RXBERF flag.

Figure 436. SWPMI single buffer mode reception with CRC error

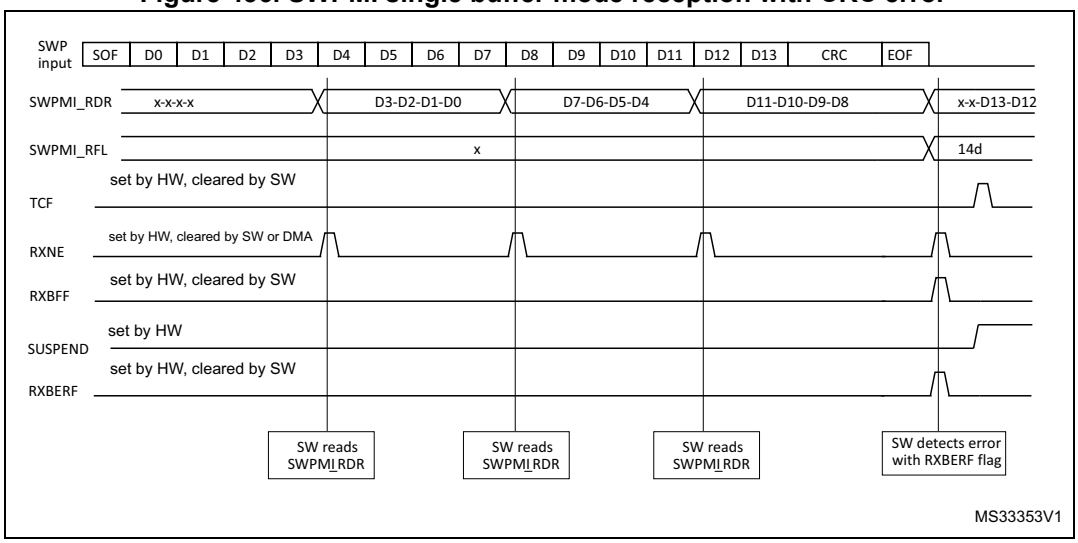

Missing or corrupted stuffing bit during payload reception

When a stuffing bit is missing or is corrupted in the payload, RXBERF and RXBFF flags are set in SWPMI_ISR after the EOF reception.

Corrupted EOF reception

Once an SOF has been received, the SWPMI accumulates the received bytes until the reception of an EOF (ignoring any possible SOF). Once an EOF has been received, the SWPMI is ready to start a new frame reception and waits for an SOF.

In case of a corrupted EOF, RXBERF and RXBFF flags will bet set in the SWPMI_ISR register after the next EOF reception.

Note: In case of a corrupted EOF reception, the payload reception carries on, thus the number of bytes in the payload might get the value 31 if the number of received bytes is greater than 30. The number of bytes in the payload is read in the SWPMI_RFL register or in bits [23:16] of the 8th word of the buffer in the RAM memory, depending on the operating mode.

39.3.10 Loopback mode

The loopback mode can be used for test purposes. The user must set LPBK bit in the SWPMI_CR register in order to enable the loopback mode.

When the loopback mode is enabled, SWPMI_TX and SWPMI_RX signals are connected together. As a consequence, all frames sent by the SWPMI will be received back.

39.4 SWPMI low-power modes

Table 181. Effect of low-power modes on SWPMI

Mode	Description
Sleep	No effect. SWPMI interrupts cause the device to exit the Sleep mode.
Low-power run	No effect.
Low-power sleep	No effect. SWPMI interrupts cause the device to exit the Low-power sleep mode.
Stop 0 / Stop 1	SWPMI registers content is kept. A RESUME from SUSPENDED mode issued by the slave can wake up the device from Stop 0 and Stop 1 modes if the SWPCLK is HSI16 (refer to *Section 39.3.1: SWPMI block diagram*).
Stop 2	SWPMI registers content is kept. SWPMI must be disabled before entering Stop 2.
Standby	The SWPMI peripheral is powered down and must be reinitialized after exiting Standby or Shutdown mode.
Shutdown	

39.5 SWPMI interrupts

All SWPMI interrupts are connected to the NVIC.

To enable the SWPMI interrupt, the following sequence is required:

1. Configure and enable the SWPMI interrupt channel in the NVIC
2. Configure the SWPMI to generate SWPMI interrupts (refer to the SWPMI_IER register).

Table 182. Interrupt control bits

Interrupt event	Event flag	Enable control bit	Exit the Sleep mode	Exit the Stop mode	Exit the Standby mode
Receive buffer full	RXBFF	RXBFIE	yes	no	no
Transmit buffer empty	TXBEF	TXBEIE	yes	no	no
Receive buffer error (CRC error)	RXBERF	RXBEIE	yes	no	no
Receive buffer overrun	RXOVRF	RXBOVEREIE	yes	no	no
Transmit buffer underrun	TXUNRF	TXBUNREIE	yes	no	no
Receive data register not empty	RXNE	RIE	yes	no	no
Transmit data register full	TXE	TIE	yes	no	no
Transfer complete flag	TCF	TCIE	yes	no	no
Slave resume flag	SRF	SRIE	yes	yes (1)	no

1. If HSI16 is selected for SWPCLK.

39.6 SWPMI registers

Refer to *Section 1.1* of the reference manual for a list of abbreviations used in register descriptions.

The peripheral registers can be accessed by words (32-bit).

39.6.1 SWPMI Configuration/Control register (SWPMI_CR)

Address offset: 0x00

Reset value: 0x0000 0000

31	30	29	28	27	26	25	24	23	22	21	20	19	18	17	16
Res.	Res.	Res.	Res.	Res.	Res.	Res.	Res.	Res.	Res.	Res.	Res.	Res.	Res.	Res.	Res.

15	14	13	12	11	10	9	8	7	6	5	4	3	2	1	0
Res.	Res.	Res.	Res.	Res.	DEACT	Res.	Res.	Res.	Res.	SWP ACT	LPBK	TXMOD E	RXMO DE	TXDMA	RXDMA
					rw					rw	rw	rw	rw	rw	rw

Bits 31:11 Reserved, must be kept at reset value

Bit 10 **DEACT**: Single wire protocol master interface deactivate

This bit is used to request the SWP DEACTIVATED state. Setting this bit has the same effect as clearing the SWPACT, except that a possible incoming RESUME by slave will keep the SWP in the ACTIVATED state.

Bits 9:6 Reserved, must be kept at reset value

Bit 5 **SWPACT**: Single wire protocol master interface activate

This bit is used to activate the SWP bus (refer to *Section 39.3.2: SWP initialization and activation*).

0: SWPMI_IO is pulled down to ground, SWP bus is switched to DEACTIVATED state

1: SWPMI_IO is released, SWP bus is switched to SUSPENDED state

To be able to set SWPACT bit, DEACT bit must be have been cleared previously.

Bit 4 **LPBK**: Loopback mode enable

This bit is used to enable the loopback mode

0: Loopback mode is disabled

1: Loopback mode is enabled

Note: This bit cannot be written while SWPACT bit is set.

Bit 3 **TXMODE**: Transmission buffering mode

This bit is used to choose the transmission buffering mode. This bit is relevant only when TXDMA bit is set (refer to *Table 183: Buffer modes selection for transmission/reception*).

0: SWPMI is configured in Single software buffer mode for transmission

1: SWPMI is configured in Multi software buffer mode for transmission.

Note: This bit cannot be written while SWPACT bit is set.

Bit 2 **RXMODE**: Reception buffering mode

This bit is used to choose the reception buffering mode. This bit is relevant only when TXDMA bit is set (refer to *Table 183: Buffer modes selection for transmission/reception*).

0: SWPMI is configured in Single software buffer mode for reception

1: SWPMI is configured in Multi software buffer mode for reception.

Note: This bit cannot be written while SWPACT bit is set.

Bit 1 **TXDMA**: Transmission DMA enable

This bit is used to enable the DMA mode in transmission

0: DMA is disabled for transmission

1: DMA is enabled for transmission

Note: TXDMA is automatically cleared if the payload size of the transmitted frame is given as 0x00 (in the least significant byte of TDR for the first word of a frame). TXDMA is also automatically cleared on underrun events (when TXUNRF flag is set in the SWP_ISR register)

Bit 0 **RXDMA**: Reception DMA enable

This bit is used to enable the DMA mode in reception

0: DMA is disabled for reception

1: DMA is enabled for reception

Table 183. Buffer modes selection for transmission/reception

Buffer mode	No software buffer	Single software buffer	Multi software buffer
RXMODE/TXMODE	x	0	1
RXDMA/TXDMA	0	1	1

39.6.2 SWPMI Bitrate register (SWPMI_BRR)

Address offset: 0x04

Reset value: 0x0000 0001

31	30	29	28	27	26	25	24	23	22	21	20	19	18	17	16
Res.	Res.	Res.	Res.	Res.	Res.	Res.	Res.	Res.	Res.	Res.	Res.	Res.	Res.	Res.	Res.

15	14	13	12	11	10	9	8	7	6	5	4	3	2	1	0
Res.	Res.	Res.	Res.	Res.	Res.	Res.	Res.	Res.	Res.	BR[5:0]					
										rw	rw	rw	rw	rw	rw

Bits 31:6 Reserved, must be kept at reset value

Bits 5:0 **BR[5:0]**: Bitrate prescaler

This field must be programmed to set SWP bus bitrate, taking into account the F_{SWPCLK} programmed in the RCC (Reset and Clock Control), according to the following formula:

$F_{SWP}= F_{SWPCLK} / ((BR[5:0]+1)x4)$

Note: The programmed bitrate must stay within the following range: from 100 kbit/s up to 2 Mbit/s.

BR[5:0] cannot be written while SWPACT bit is set in the SWPMI_CR register.

39.6.3 SWPMI Interrupt and Status register (SWPMI_ISR)

Address offset: 0x0C

Reset value: 0x0000 02C2

31	30	29	28	27	26	25	24	23	22	21	20	19	18	17	16
Res.	Res.	Res.	Res.	Res.	Res.	Res.	Res.	Res.	Res.	Res.	Res.	Res.	Res.	Res.	Res.

15	14	13	12	11	10	9	8	7	6	5	4	3	2	1	0
Res.	Res.	Res.	Res.	Res.	DEACTF	SUSP	SRF	TCF	TXE	RXNE	TXUNRF	RXOVRF	RXBERF	TXBEF	RXBFF
					r	r	r	r	r	r	r	r	r	r	r

Bits 31:11 Reserved, must be kept at reset value

Bit 10 **DEACTF**: DEACTIVATED flag

This bit is a status flag, acknowledging the request to enter the DEACTIVATED mode.
0: SWP bus is in ACTIVATED or SUSPENDED state
1: SWP bus is in DEACTIVATED state
If a RESUME by slave state is detected by the SWPMI while DEACT bit is set by software, the SRF flag will be set, DEACTF will not be set and SWP will move in ACTIVATED state.

Bit 9 **SUSP**: SUSPEND flag

This bit is a status flag, reporting the SWP bus state
0: SWP bus is in ACTIVATED state
1: SWP bus is in SUSPENDED or DEACTIVATED state

Bit 8 **SRF**: Slave resume flag

This bit is set by hardware to indicate a RESUME by slave detection. It is cleared by software, writing 1 to CSRF bit in the SWPMI_ICR register.
0: No Resume by slave state detected
1: A Resume by slave state has been detected during the SWP bus SUSPENDED state

Bit 7 **TCF**: Transfer complete flag

This flag is set by hardware as soon as both transmission and reception are completed and SWP is switched to the SUSPENDED state. It is cleared by software, writing 1 to CTCF bit in the SWPMI_ICR register.
0: Transmission or reception is not completed
1: Both transmission and reception are completed and SWP is switched to the SUSPENDED state

Bit 6 **TXE**: Transmit data register empty

This flag indicates the transmit data register status
0: Data written in transmit data register SWPMI_TDR is not transmitted yet
1: Data written in transmit data register SWPMI_TDR has been transmitted and SWPMI_TDR can be written to again

Bit 5 **RXNE**: Receive data register not empty

This flag indicates the receive data register status
0: Data is not received in the SWPMI_RDR register
1: Received data is ready to be read in the SWPMI_RDR register

Bit 4 **TXUNRF**: Transmit underrun error flag

This flag is set by hardware to indicate an underrun during the payload transmission i.e. SWPMI_TDR has not been written in time by the software or the DMA. It is cleared by software, writing 1 to the CTXUNRF bit in the SWPMI_ICR register.

0: No underrun error in transmission
1: Underrun error in transmission detected

Bit 3 **RXOVRF**: Receive overrun error flag

This flag is set by hardware to indicate an overrun during the payload reception, i.e. SWPMI_RDR has not be read in time by the software or the DMA. It is cleared by software, writing 1 to CRXOVRF bit in the SWPMI_ICR register.

0: No overrun in reception
1: Overrun in reception detected

Bit 2 **RXBERF**: Receive CRC error flag

This flag is set by hardware to indicate a CRC error in the received frame. It is set synchronously with RXBFF flag. It is cleared by software, writing 1 to CRXBERF bit in the SWPMI_ICR register.

0: No CRC error in reception
1: CRC error in reception detected

Bit 1 **TXBEF**: Transmit buffer empty flag

This flag is set by hardware to indicate that no more SWPMI_TDR update is required to complete the current frame transmission. It is cleared by software, writing 1 to CTXBEF bit in the SWPMI_ICR register.

0: Frame transmission buffer no yet emptied
1: Frame transmission buffer has been emptied

Bit 0 **RXBFF**: Receive buffer full flag

This flag is set by hardware when the final word for the frame under reception is available in SWPMI_RDR. It is cleared by software, writing 1 to CRXBFF bit in the SWPMI_ICR register.

0: The last word of the frame under reception has not yet arrived in SWPMI_RDR
1: The last word of the frame under reception has arrived in SWPMI_RDR

39.6.4 SWPMI Interrupt Flag Clear register (SWPMI_ICR)

Address offset: 0x10

Reset value: 0x0000 0000

31	30	29	28	27	26	25	24	23	22	21	20	19	18	17	16
Res.	Res.	Res.	Res.	Res.	Res.	Res.	Res.	Res.	Res.	Res.	Res.	Res.	Res.	Res.	Res.
15	**14**	**13**	**12**	**11**	**10**	**9**	**8**	**7**	**6**	**5**	**4**	**3**	**2**	**1**	**0**
Res.	Res.	Res.	Res.	Res.	Res.	Res.	CSRF	CTCF	Res.	Res.	CTXUNRF	CRXOVRF	CRXBERF	CTXBEF	CRXBFF
							rc_w1	rc_w1			rc_w1	rc_w1	rc_w1	rc_w1	rc_w1

Bits 31:9 Reserved, must be kept at reset value

Bit 8 **CSRF**: Clear slave resume flag
Writing 1 to this bit clears the SRF flag in the SWPMI_ISR register
Writing 0 to this bit does not have any effect

Bit 7 **CTCF**: Clear transfer complete flag
Writing 1 to this bit clears the TCF flag in the SWPMI_ISR register
Writing 0 to this bit does not have any effect

Bits 6:5 Reserved, must be kept at reset value

Bit 4 **CTXUNRF**: Clear transmit underrun error flag
Writing 1 to this bit clears the TXUNRF flag in the SWPMI_ISR register
Writing 0 to this bit does not have any effect

Bit 3 **CRXOVRF**: Clear receive overrun error flag
Writing 1 to this bit clears the RXBOCREF flag in the SWPMI_ISR register
Writing 0 to this bit does not have any effect

Bit 2 **CRXBERF**: Clear receive CRC error flag
Writing 1 to this bit clears the RXBERF flag in the SWPMI_ISR register
Writing 0 to this bit does not have any effect

Bit 1 **CTXBEF**: Clear transmit buffer empty flag
Writing 1 to this bit clears the TXBEF flag in the SWPMI_ISR register
Writing 0 to this bit does not have any effect

Bit 0 **CRXBFF**: Clear receive buffer full flag
Writing 1 to this bit clears the RXBFF flag in the SWPMI_ISR register
Writing 0 to this bit does not have any effect

39.6.5 SWPMI Interrupt Enable register (SMPMI_IER)

Address offset: 0x14

Reset value: 0x0000 0000

31	30	29	28	27	26	25	24	23	22	21	20	19	18	17	16
Res.	Res.	Res.	Res.	Res.	Res.	Res.	Res.	Res.	Res.	Res.	Res.	Res.	Res.	Res.	Res.
15	**14**	**13**	**12**	**11**	**10**	**9**	**8**	**7**	**6**	**5**	**4**	**3**	**2**	**1**	**0**
Res.	Res.	Res.	Res.	Res.	Res.	Res.	SRIE	TCIE	TIE	RIE	TXUNREIE	RXOVREIE	RXBEIE	TXBERIE	RXBFIE
							rw	rw	rw	rw	rw	rw	rw	rw	rw

Bits 31:9 Reserved, must be kept at reset value

Bit 8 **SRIE**: Slave resume interrupt enable
0: Interrupt is inhibited
1: An SWPMI interrupt is generated whenever SRF flag is set in the SWPMI_ISR register

Bit 7 **TCIE**: Transmit complete interrupt enable
0: Interrupt is inhibited
1: An SWPMI interrupt is generated whenever TCF flag is set in the SWPMI_ISR register

Bit 6 **TIE**: Transmit interrupt enable
0: Interrupt is inhibited
1: An SWPMI interrupt is generated whenever TXE flag is set in the SWPMI_ISR register

Bit 5 **RIE**: Receive interrupt enable
0: Interrupt is inhibited
1: An SWPMI interrupt is generated whenever RXNE flag is set in the SWPMI_ISR register

Bit 4 **TXUNRIE**: Transmit underrun error interrupt enable
0: Interrupt is inhibited
1: An SWPMI interrupt is generated whenever TXBUNRF flag is set in the SWPMI_ISR register

Bit 3 **RXOVRIE**: Receive overrun error interrupt enable
0: Interrupt is inhibited
1: An SWPMI interrupt is generated whenever RXBOVRF flag is set in the SWPMI_ISR register

Bit 2 **RXBERIE**: Receive CRC error interrupt enable
0: Interrupt is inhibited
1: An SWPMI interrupt is generated whenever RXBERF flag is set in the SWPMI_ISR register

Bit 1 **TXBEIE**: Transmit buffer empty interrupt enable
0: Interrupt is inhibited
1: An SWPMI interrupt is generated whenever TXBEF flag is set in the SWPMI_ISR register

Bit 0 **RXBFIE**: Receive buffer full interrupt enable
0: Interrupt is inhibited
1: An SWPMI interrupt is generated whenever RXBFF flag is set in the SWPMI_ISR register

39.6.6 SWPMI Receive Frame Length register (SWPMI_RFL)

Address offset: 0x18

Reset value: 0x0000 0000

31	30	29	28	27	26	25	24	23	22	21	20	19	18	17	16
Res.	Res.	Res.	Res.	Res.	Res.	Res.	Res.	Res.	Res.	Res.	Res.	Res.	Res.	Res.	Res.

15	14	13	12	11	10	9	8	7	6	5	4	3	2	1	0
Res.	Res.	Res.	Res.	Res.	Res.	Res.	Res.	Res.	Res.	Res.	RFL[4:0]				
											r	r	r	r	r

Bits 31:5 Reserved, must be kept at reset value

Bits 4:0 **RFL[4:0]**: Receive frame length

RFL[4:0] is the number of data bytes in the payload of the received frame. The two least significant bits RFL[1:0] give the number of relevant bytes for the last SWPMI_RDR register read.

39.6.7 SWPMI Transmit data register (SWPMI_TDR)

Address offset: 0x1C

Reset value: 0x0000 0000

31	30	29	28	27	26	25	24	23	22	21	20	19	18	17	16
TD[31:16]															
w	w	w	w	w	w	w	w	w	w	w	w	w	w	w	w
15	14	13	12	11	10	9	8	7	6	5	4	3	2	1	0
TD[15:0]															
w	w	w	w	w	w	w	w	w	w	w	w	w	w	w	w

Bits 31:0 **TD[31:0]**: Transmit data

Contains the data to be transmitted.

Writing to this register triggers the SOF transmission or the next payload data transmission, and clears the TXE flag.

39.6.8 SWPMI Receive data register (SWPMI_RDR)

Address offset: 0x20

Reset value: 0x0000 0000

31	30	29	28	27	26	25	24	23	22	21	20	19	18	17	16
RD[31:16]															
r	r	r	r	r	r	r	r	r	r	r	r	r	r	r	r

15	14	13	12	11	10	9	8	7	6	5	4	3	2	1	0
RD[15:0]															
r	r	r	r	r	r	r	r	r	r	r	r	r	r	r	r

Bits 31:0 **RD[31:0]**: received data

Contains the received data

Reading this register is clearing the RXNE flag.

39.6.9 SWPMI Option register (SWPMI_OR)

Address offset: 0x24

Reset value: 0x0000 0000

31	30	29	28	27	26	25	24	23	22	21	20	19	18	17	16
Res.	Res.	Res.	Res.	Res.	Res.	Res.	Res.	Res.	Res.	Res.	Res.	Res.	Res.	Res.	Res.

15	14	13	12	11	10	9	8	7	6	5	4	3	2	1	0
														SWP_ CLASS	SWP_ TBYP
														rw	rw

Bits 31:2 Reserved, must be kept at reset value

Bit 1 **SWP_CLASS**: SWP class selection

This bit is used to select the SWP class (refer to *Section 39.3.2: SWP initialization and activation*).

0: Class C: SWPMI_IO uses directly VDD voltage to operate in class C.
This configuration must be selected when VDD is in the range [1.62 V to 1.98 V]

1: Class B: SWPMI_IO uses an internal voltage regulator to operate in class B.
This configuration must be selected when VDD is in the range [2.70 V to 3.30 V]

Bit 0 **SWP_TBYP**: SWP transceiver bypass

This bit is used to bypass the internal transceiver (SWPMI_IO), and connect an external transceiver.

0: Internal transceiver is enabled. The external interface for SWPMI is SWPMI_IO (SWPMI_RX, SWPMI_TX and SWPMI_SUSPEND signals are not available on GPIOs)

1: Internal transceiver is disabled. SWPMI_RX, SWPMI_TX and SWPMI_SUSPEND signals are available as alternate function on GPIOs. This configuration is selected to connect an external transceiver

39.6.10 SWPMI register map and reset value table

Table 184. SWPMI register map and reset values

Offset	Register name reset value	Register size																															
		31	30	29	28	27	26	25	24	23	22	21	20	19	18	17	16	15	14	13	12	11	10	9	8	7	6	5	4	3	2	1	0
0x00	SWPMI_CR	Res.	Res.	Res.	Res.	Res.	Res.	Res.	Res.	Res.	Res.	Res.	Res.	Res.	Res.	Res.	Res.	Res.	Res.	Res.	Res.	Res.	DEACT	Res.	Res.	Res.	Res.	SWPACT	LPBK	TXMODE	RXMODE	TXDMA	RXDMA
	Reset value																						0					0	0	0	0	0	0
0x04	SWPMI_BRR	Res.	Res.	Res.	Res.	Res.	Res.	Res.	Res.	Res.	Res.	Res.	Res.	Res.	Res.	Res.	Res.	Res.	Res.	Res.	Res.	Res.	Res.	Res.	Res.	Res.	Res.	BRR[5:0]					
	Reset value																											0	0	0	0	0	1
0x08	RESERVED	Res.	Res.	Res.	Res.	Res.	Res.	Res.	Res.	Res.	Res.	Res.	Res.	Res.	Res.	Res.	Res.	Res.	Res.	Res.	Res.	Res.	Res.	Res.	Res.	Res.	Res.	Res.	Res.	Res.	Res.	Res.	Res.
	Reset value																																
0x0C	SWPMI_ISR	Res.	Res.	Res.	Res.	Res.	Res.	Res.	Res.	Res.	Res.	Res.	Res.	Res.	Res.	Res.	Res.	Res.	Res.	Res.	Res.	Res.	DEACTF	SUSP	SRF	TCF	TXE	RXNE	TXUNRF	RXOVRF	RXBERF	TXBEF	RXBFF
	Reset value																						0	1	0	1	1	0	0	0	0	1	0
0x10	SWPMI_ICR	Res.	Res.	Res.	Res.	Res.	Res.	Res.	Res.	Res.	Res.	Res.	Res.	Res.	Res.	Res.	Res.	Res.	Res.	Res.	Res.	Res.	Res.	Res.	CSRF	CTCF	Res.	Res.	CTXUNRF	CRXOVRF	CRXBERF	CTXBEF	CRXBFF
	Reset value																								0	0			0	0	0	0	0
0x14	SWPMI_IER	Res.	Res.	Res.	Res.	Res.	Res.	Res.	Res.	Res.	Res.	Res.	Res.	Res.	Res.	Res.	Res.	Res.	Res.	Res.	Res.	Res.	Res.	Res.	SRIE	TCIE	TIE	RIE	TXUNRIE	RXOVRIE	RXBERIE	TXBEIE	RXBFIE
	Reset value																								0	0	0	0	0	0	0	0	0
0x18	SWPMI_RFL	Res.	Res.	Res.	Res.	Res.	Res.	Res.	Res.	Res.	Res.	Res.	Res.	Res.	Res.	Res.	Res.	Res.	Res.	Res.	Res.	Res.	Res.	Res.	Res.	Res.	Res.	Res.	RFL[4:0]				
	Reset value																												0	0	0	0	0
0x1C	SWPMI_TDR	TD[31:0]																															
	Reset value	0	0	0	0	0	0	0	0	0	0	0	0	0	0	0	0	0	0	0	0	0	0	0	0	0	0	0	0	0	0	0	0
0x20	SWPMI_RDR	RD[31:0]																															
	Reset value	0	0	0	0	0	0	0	0	0	0	0	0	0	0	0	0	0	0	0	0	0	0	0	0	0	0	0	0	0	0	0	0
0x24	SWPMI_OR	Res.	Res.	Res.	Res.	Res.	Res.	Res.	Res.	Res.	Res.	Res.	Res.	Res.	Res.	Res.	Res.	Res.	Res.	Res.	Res.	Res.	Res.	Res.	Res.	Res.	Res.	Res.	Res.	Res.	Res.	SWP_CLASS	SWP_TBYP
	Reset value																															0	0

Refer to *Section 2.2.2 on page 62* for the register boundary addresses.

40 SD/SDIO/MMC card host interface (SDMMC)

40.1 SDMMC main features

The SD/SDIO MMC card host interface (SDMMC) provides an interface between the APB2 peripheral bus and MultiMediaCards (MMCs), SD memory cards and SDIO cards.

The MultiMediaCard system specifications are available through the MultiMediaCard Association website, published by the MMCA technical committee.

SD memory card and SD I/O card system specifications are available through the SD card Association website.

The SDMMC features include the following:

- Full compliance with *MultiMediaCard System Specification Version 4.2*. Card support for three different databus modes: 1-bit (default), 4-bit and 8-bit
- Full compatibility with previous versions of MultiMediaCards (forward compatibility)
- Full compliance with *SD Memory Card Specifications Version 2.0*
- Full compliance with *SD I/O Card Specification Version 2.0:* card support for two different databus modes: 1-bit (default) and 4-bit
- Data transfer up to 50 MHz for the 8 bit mode
- Data and command output enable signals to control external bidirectional drivers.

Note: 1 The SDMMC does not have an SPI-compatible communication mode.

2 The SD memory card protocol is a superset of the MultiMediaCard protocol as defined in the MultiMediaCard system specification V2.11. Several commands required for SD memory devices are not supported by either SD I/O-only cards or the I/O portion of combo cards. Some of these commands have no use in SD I/O devices, such as erase commands, and thus are not supported in the SDIO protocol. In addition, several commands are different between SD memory cards and SD I/O cards and thus are not supported in the SDIO protocol. For details refer to SD I/O card Specification Version 1.0.

The MultiMediaCard/SD bus connects cards to the controller.

The current version of the SDMMC supports only one SD/SDIO/MMC4.2 card at any one time and a stack of MMC4.1 or previous.

40.2 SDMMC bus topology

Communication over the bus is based on command and data transfers.

The basic transaction on the MultiMediaCard/SD/SD I/O bus is the command/response transaction. These types of bus transaction transfer their information directly within the command or response structure. In addition, some operations have a data token.

Data transfers to/from SD/SDIO memory cards are done in data blocks. Data transfers to/from MMC are done data blocks or streams.

Figure 437. “No response” and “no data” operations

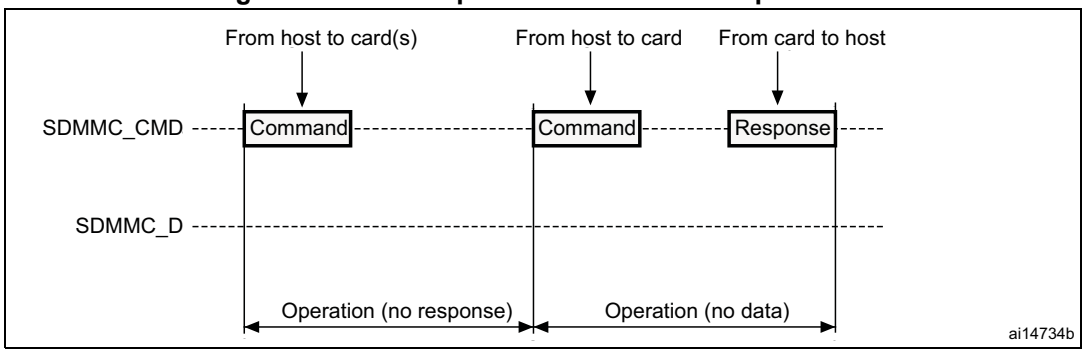

Figure 438. (Multiple) block read operation

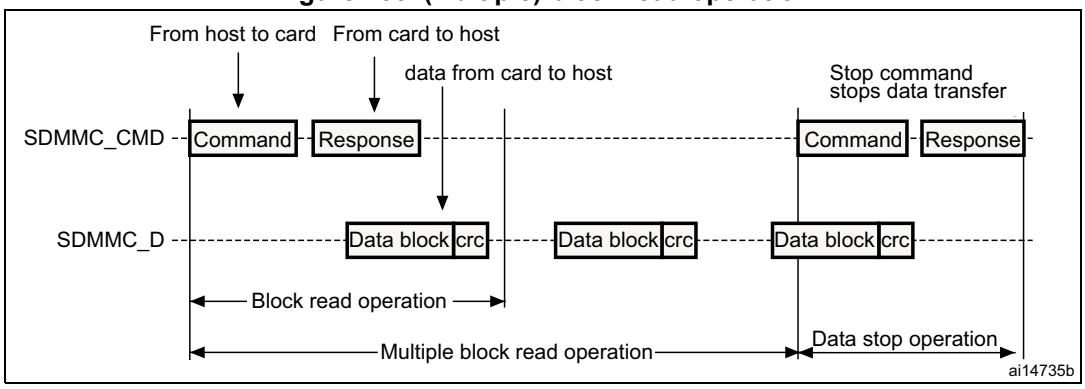

Figure 439. (Multiple) block write operation

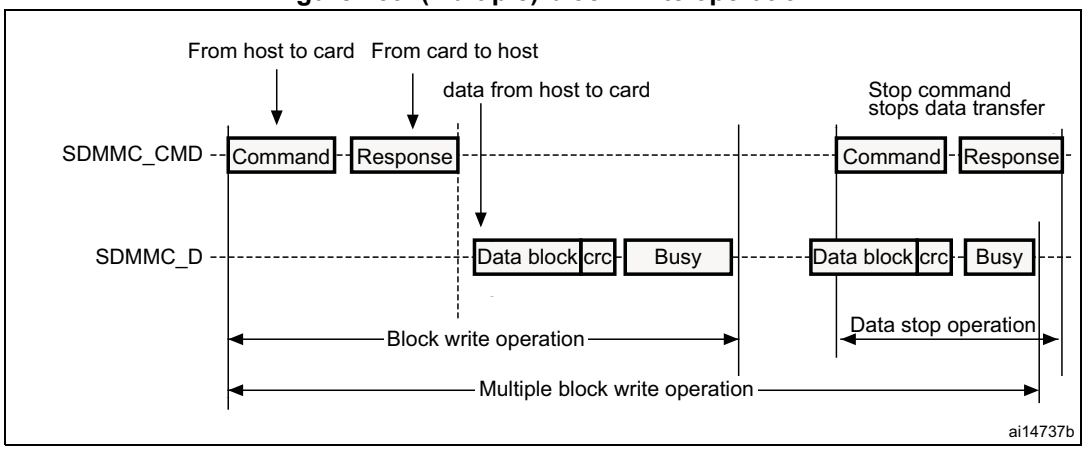

Note: The SDMMC will not send any data as long as the Busy signal is asserted (SDMMC_D0 pulled low).

Figure 440. Sequential read operation

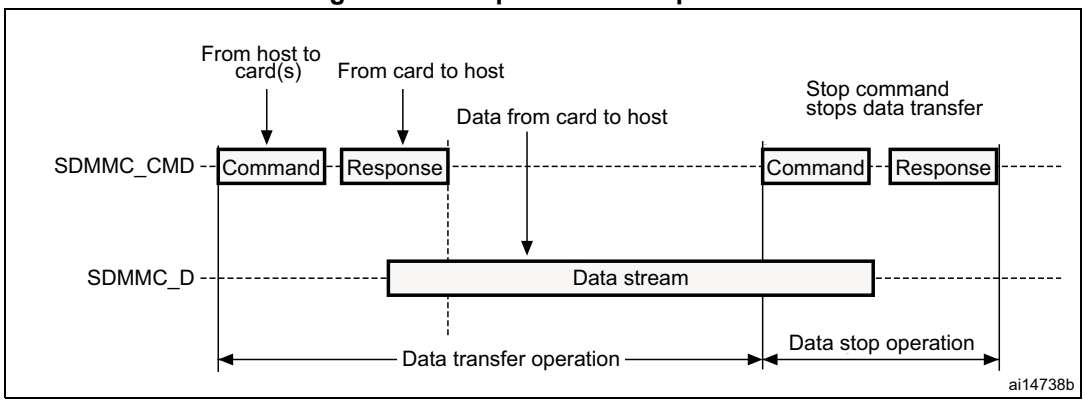

Figure 441. Sequential write operation

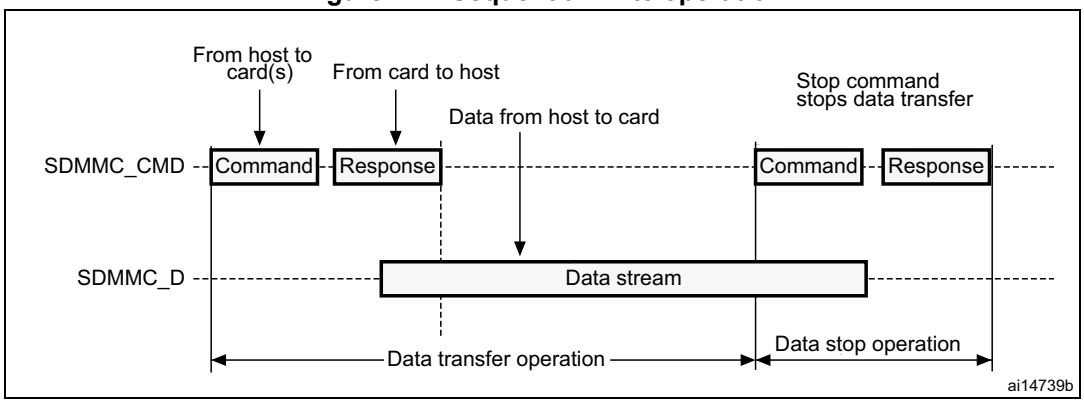

40.3 SDMMC functional description

The SDMMC consists of two parts:

- The SDMMC adapter block provides all functions specific to the MMC/SD/SD I/O card such as the clock generation unit, command and data transfer.
- The APB2 interface accesses the SDMMC adapter registers, and generates interrupt and DMA request signals.

Figure 442. SDMMC block diagram

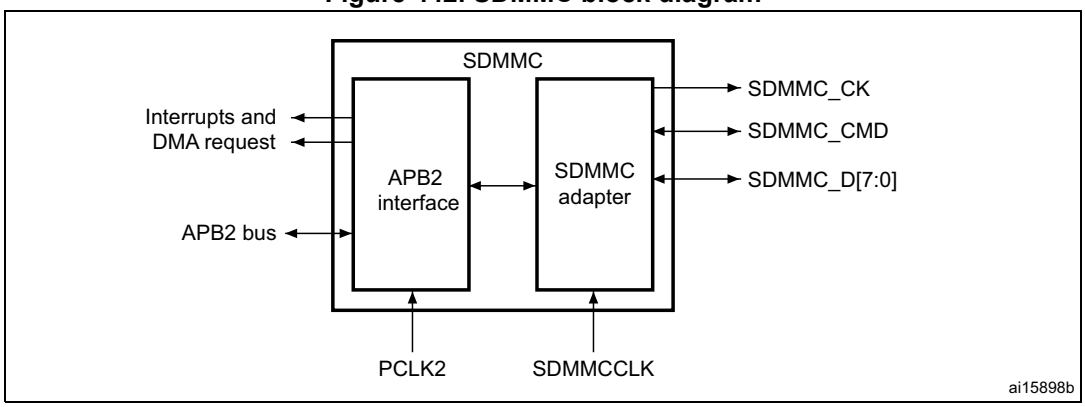

By default SDMMC_D0 is used for data transfer. After initialization, the host can change the databus width.

If a MultiMediaCard is connected to the bus, SDMMC_D0, SDMMC_D[3:0] or SDMMC_D[7:0] can be used for data transfer. MMC V3.31 or previous, supports only 1 bit of data so only SDMMC_D0 can be used.

If an SD or SD I/O card is connected to the bus, data transfer can be configured by the host to use SDMMC_D0 or SDMMC_D[3:0]. All data lines are operating in push-pull mode.

SDMMC_CMD has two operational modes:

- Open-drain for initialization (only for MMCV3.31 or previous)
- Push-pull for command transfer (SD/SD I/O card MMC4.2 use push-pull drivers also for initialization)

SDMMC_CK is the clock to the card: one bit is transferred on both command and data lines with each clock cycle.

The SDMMC uses two clock signals:

- SDMMC adapter clock SDMMCCLK = 50 MHz)
- APB2 bus clock (PCLK2)

PCLK2 and SDMMC_CK clock frequencies must respect the following condition:

$$\text{Frequenc}(\text{PCLK2}) > ((3\text{xWidth}) / 32) \times \text{Frequency}(\text{SDMMC_CK})$$

The signals shown in *Table 185* are used on the MultiMediaCard/SD/SD I/O card bus.

Table 185. SDMMC I/O definitions

Pin	Direction	Description
SDMMC_CK	Output	MultiMediaCard/SD/SDIO card clock. This pin is the clock from host to card.
SDMMC_CMD	Bidirectional	MultiMediaCard/SD/SDIO card command. This pin is the bidirectional command/response signal.
SDMMC_D[7:0]	Bidirectional	MultiMediaCard/SD/SDIO card data. These pins are the bidirectional databus.

40.3.1 SDMMC adapter

Figure 443 shows a simplified block diagram of an SDMMC adapter.

Figure 443. SDMMC adapter

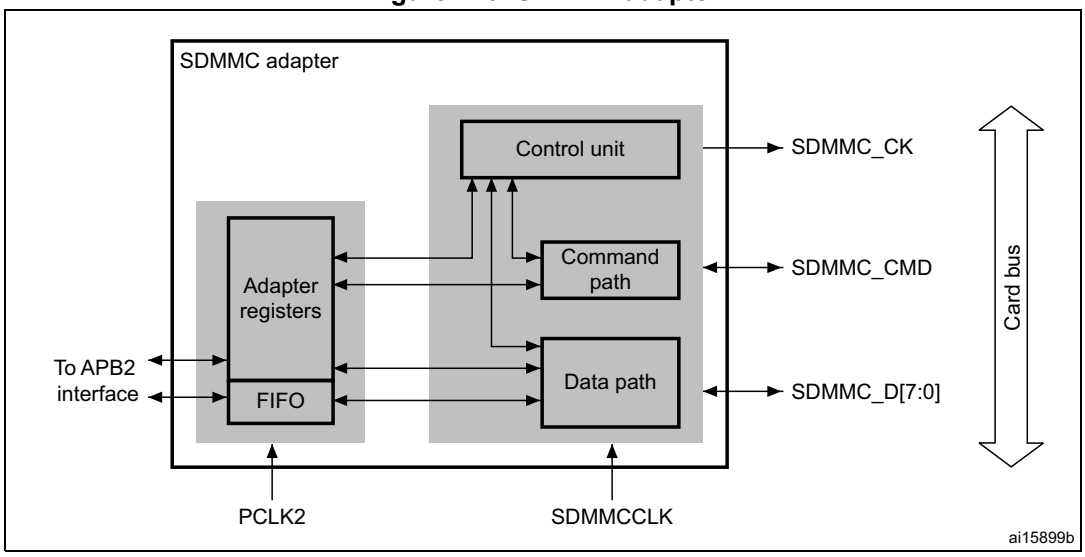

The SDMMC adapter is a multimedia/secure digital memory card bus master that provides an interface to a multimedia card stack or to a secure digital memory card. It consists of five subunits:

- Adapter register block
- Control unit
- Command path
- Data path
- Data FIFO

*Note: The adapter registers and FIFO use the APB2 bus clock domain (*PCLK2*). The control unit, command path and data path use the SDMMC adapter clock domain (SDMMCCLK).*

Adapter register block

The adapter register block contains all system registers. This block also generates the signals that clear the static flags in the multimedia card. The clear signals are generated when 1 is written into the corresponding bit location in the SDMMC Clear register.

Control unit

The control unit contains the power management functions and the clock divider for the memory card clock.

There are three power phases:

- power-off
- power-up
- power-on

Figure 444. Control unit

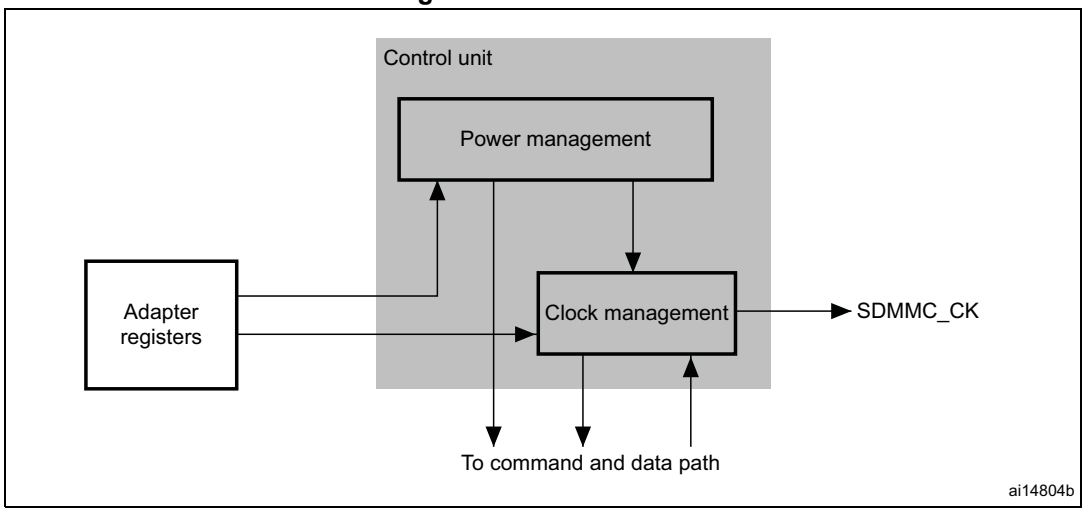

The control unit is illustrated in *Figure 444*. It consists of a power management subunit and a clock management subunit.

The power management subunit disables the card bus output signals during the power-off and power-up phases.

The clock management subunit generates and controls the SDMMC_CK signal. The SDMMC_CK output can use either the clock divide or the clock bypass mode. The clock output is inactive:

- after reset
- during the power-off or power-up phases
- if the power saving mode is enabled and the card bus is in the Idle state (eight clock periods after both the command and data path subunits enter the Idle phase)

The clock management subunit controls SDMMC_CK dephasing. When not in bypass mode the SDMMC command and data output are generated on the SDMMCCLK falling edge succeeding the rising edge of SDMMC_CK. (SDMMC_CK rising edge occurs on SDMMCCLK rising edge) when SDMMC_CLKCR[13] bit is reset (NEGEDGE = 0). When SDMMC_CLKCR[13] bit is set (NEGEDGE = 1) SDMMC command and data changed on the SDMMC_CK falling edge.

When SDMMC_CLKCR[10] is set (BYPASS = 1), SDMMC_CK rising edge occurs on SDMMCCLK rising edge. The data and the command change on SDMMCCLK falling edge whatever NEGEDGE value.

The data and command responses are latched using SDMMC_CK rising edge.

Figure 445. SDMMC_CK clock dephasing (BYPASS = 0)

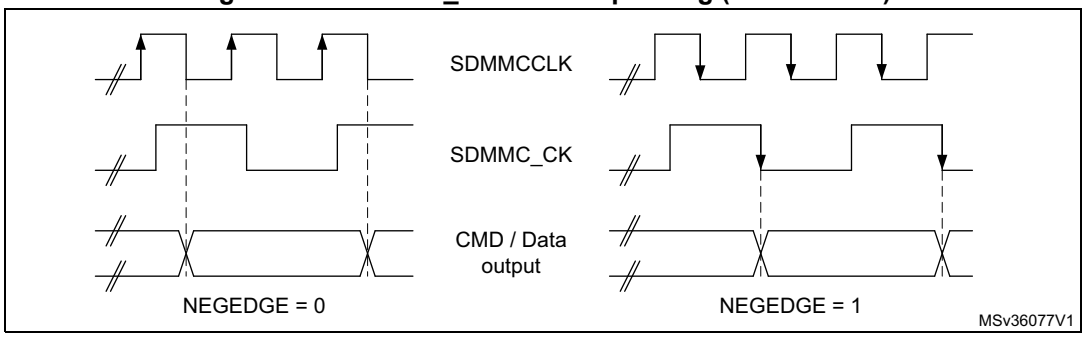

Command path

The command path unit sends commands to and receives responses from the cards.

Figure 446. SDMMC adapter command path

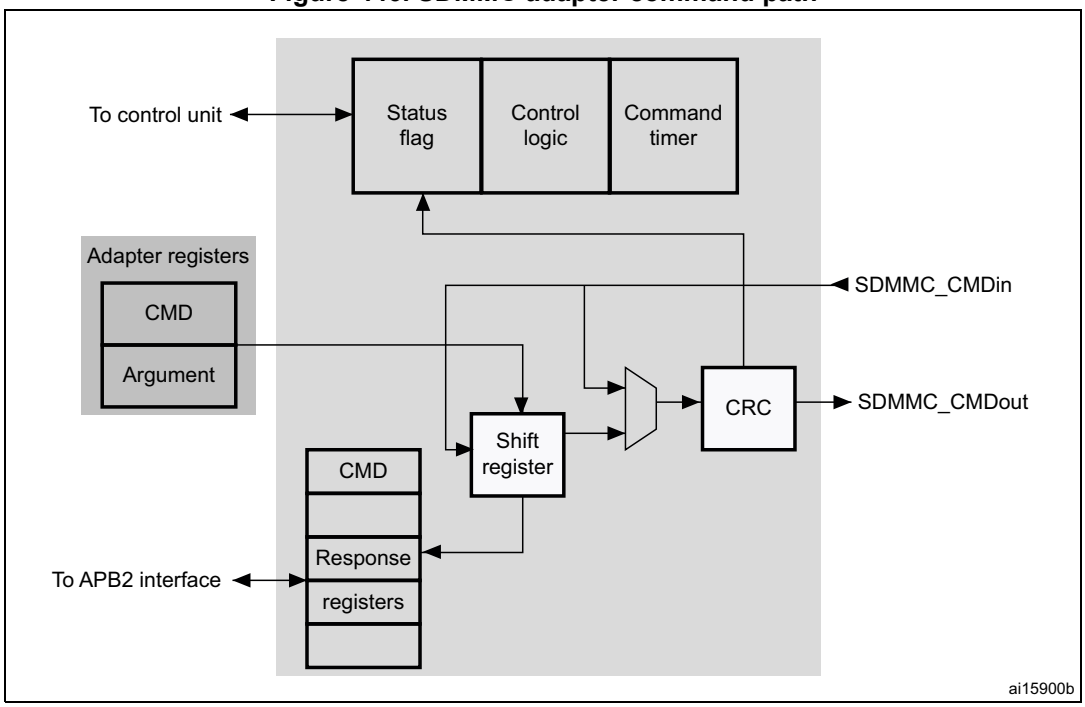

- Command path state machine (CPSM)
  - When the command register is written to and the enable bit is set, command transfer starts. When the command has been sent, the command path state machine (CPSM) sets the status flags and enters the Idle state if a response is not required. If a response is required, it waits for the response (see *Figure 447 on page 1256*). When the response is received, the received CRC code and the internally generated code are compared, and the appropriate status flags are set.

Figure 447. Command path state machine (SDMMC)

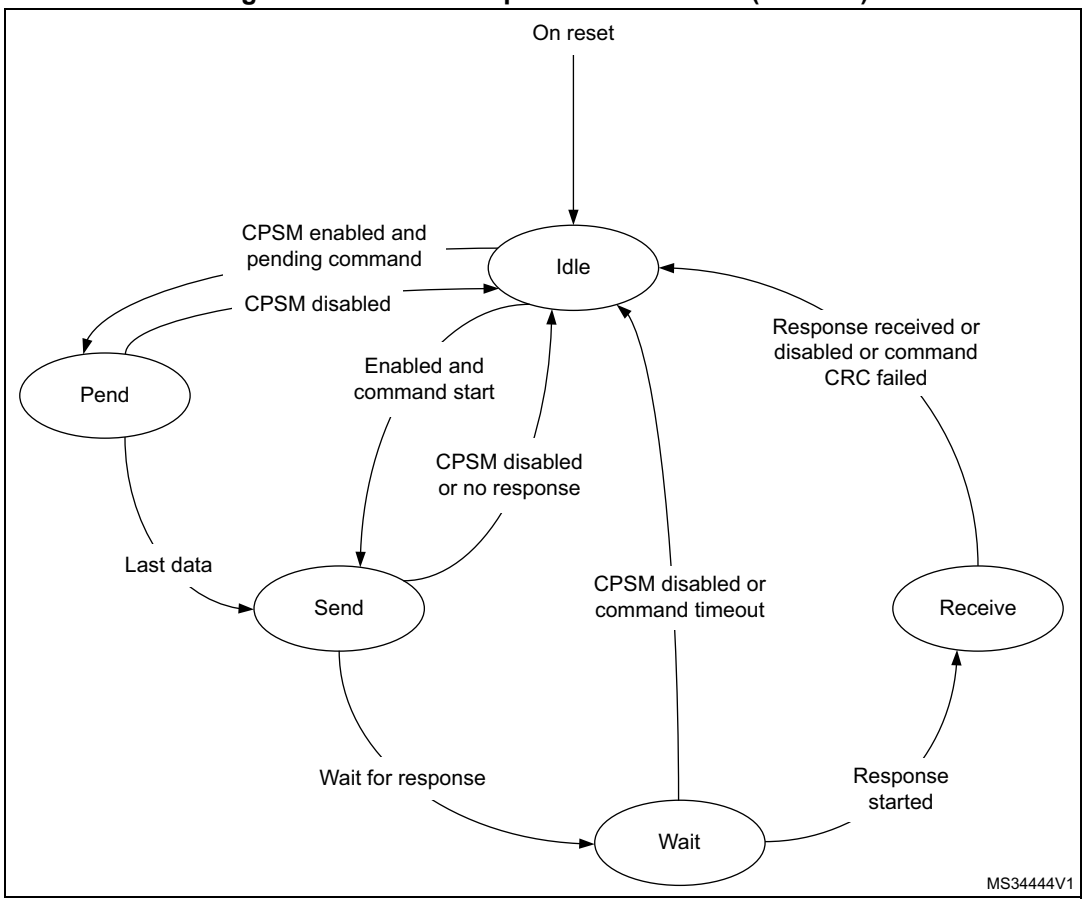

When the Wait state is entered, the command timer starts running. If the timeout is reached before the CPSM moves to the Receive state, the timeout flag is set and the Idle state is entered.

Note: The command timeout has a fixed value of 64 SDMMC_CK clock periods.

If the interrupt bit is set in the command register, the timer is disabled and the CPSM waits for an interrupt request from one of the cards. If a pending bit is set in the command register, the CPSM enters the Pend state, and waits for a CmdPend signal from the data path subunit. When CmdPend is detected, the CPSM moves to the Send state. This enables the data counter to trigger the stop command transmission.

Note: The CPSM remains in the Idle state for at least eight SDMMC_CK periods to meet the N_{CC} and N_{RC} timing constraints. N_{CC} is the minimum delay between two host commands, and N_{RC} is the minimum delay between the host command and the card response.

Figure 448. SDMMC command transfer

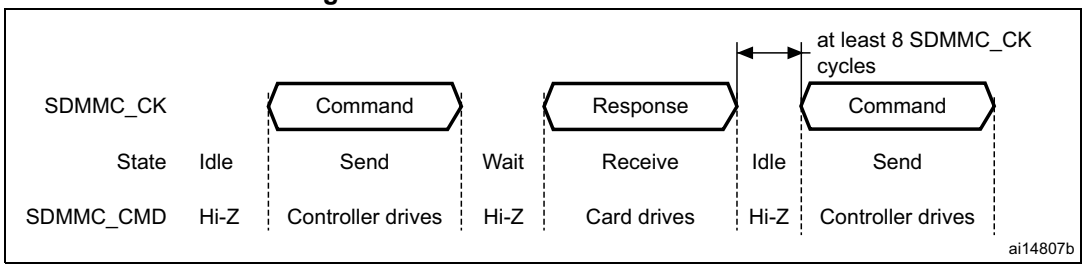

- Command format
  - Command: a command is a token that starts an operation. Command are sent from the host either to a single card (addressed command) or to all connected cards (broadcast command are available for MMC V3.31 or previous). Commands are transferred serially on the CMD line. All commands have a fixed length of 48 bits. The general format for a command token for MultiMediaCards, SD-Memory cards and SDIO-Cards is shown in *Table 186*.

    The command path operates in a half-duplex mode, so that commands and responses can either be sent or received. If the CPSM is not in the Send state, the SDMMC_CMD output is in the Hi-Z state, as shown in *Figure 448 on page 1257*. Data on SDMMC_CMD are synchronous with the rising edge of SDMMC_CK. *Table 186* shows the command format.

Table 186. Command format

Bit position	Width	Value	Description
47	1	0	Start bit
46	1	1	Transmission bit
[45:40]	6	-	Command index
[39:8]	32	-	Argument
[7:1]	7	-	CRC7
0	1	1	End bit

  - Response: a response is a token that is sent from an addressed card (or synchronously from all connected cards for MMC V3.31 or previous), to the host as an answer to a previously received command. Responses are transferred serially on the CMD line.

The SDMMC supports two response types. Both use CRC error checking:

- 48 bit short response
- 136 bit long response

Note: If the response does not contain a CRC (CMD1 response), the device driver must ignore the CRC failed status.

Table 187. Short response format

Bit position	Width	Value	Description
47	1	0	Start bit
46	1	0	Transmission bit
[45:40]	6	-	Command index
[39:8]	32	-	Argument
[7:1]	7	-	CRC7(or 1111111)
0	1	1	End bit

Table 188. Long response format

Bit position	Width	Value	Description
135	1	0	Start bit
134	1	0	Transmission bit
[133:128]	6	111111	Reserved
[127:1]	127	-	CID or CSD (including internal CRC7)
0	1	1	End bit

The command register contains the command index (six bits sent to a card) and the command type. These determine whether the command requires a response, and whether the response is 48 or 136 bits long (see *Section 40.8.4 on page 1293*). The command path implements the status flags shown in *Table 189*:

Table 189. Command path status flags

Flag	Description
CMDREND	Set if response CRC is OK.
CCRCFAIL	Set if response CRC fails.
CMDSENT	Set when command (that does not require response) is sent
CTIMEOUT	Response timeout.
CMDACT	Command transfer in progress.

The CRC generator calculates the CRC checksum for all bits before the CRC code. This includes the start bit, transmitter bit, command index, and command argument (or card status). The CRC checksum is calculated for the first 120 bits of CID or CSD for the long response format. Note that the start bit, transmitter bit and the six reserved bits are not used in the CRC calculation.

The CRC checksum is a 7-bit value:

$CRC[6:0] = \text{Remainder } [(M(x) * x^7) / G(x)]$

$G(x) = x^7 + x^3 + 1$

$M(x) = (\text{start bit}) * x^{39} + ... + (\text{last bit before CRC}) * x^0$, or

$M(x) = (\text{start bit}) * x^{119} + ... + (\text{last bit before CRC}) * x^0$

Data path

The data path subunit transfers data to and from cards. *Figure 449* shows a block diagram of the data path.

Figure 449. Data path

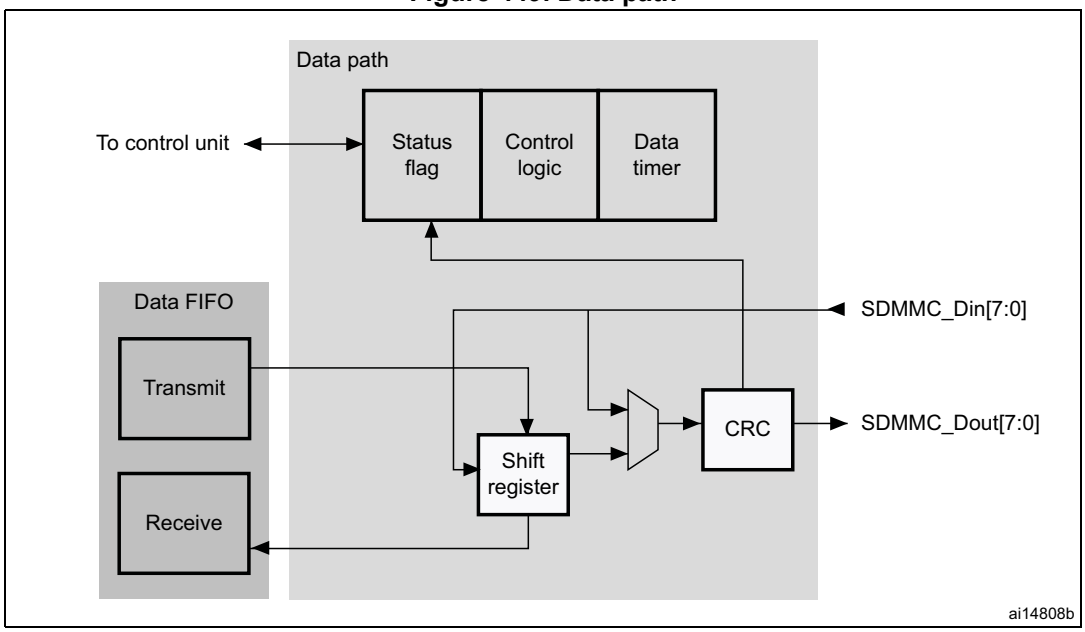

The card databus width can be programmed using the clock control register. If the 4-bit wide bus mode is enabled, data is transferred at four bits per clock cycle over all four data signals (SDMMC_D[3:0]). If the 8-bit wide bus mode is enabled, data is transferred at eight bits per clock cycle over all eight data signals (SDMMC_D[7:0]). If the wide bus mode is not enabled, only one bit per clock cycle is transferred over SDMMC_D0.

Depending on the transfer direction (send or receive), the data path state machine (DPSM) moves to the Wait_S or Wait_R state when it is enabled:

- Send: the DPSM moves to the Wait_S state. If there is data in the transmit FIFO, the DPSM moves to the Send state, and the data path subunit starts sending data to a card.
- Receive: the DPSM moves to the Wait_R state and waits for a start bit. When it receives a start bit, the DPSM moves to the Receive state, and the data path subunit starts receiving data from a card.

Data path state machine (DPSM)

The DPSM operates at SDMMC_CK frequency. Data on the card bus signals is synchronous to the rising edge of SDMMC_CK. The DPSM has six states, as shown in *Figure 450: Data path state machine (DPSM)*.

Figure 450. Data path state machine (DPSM)

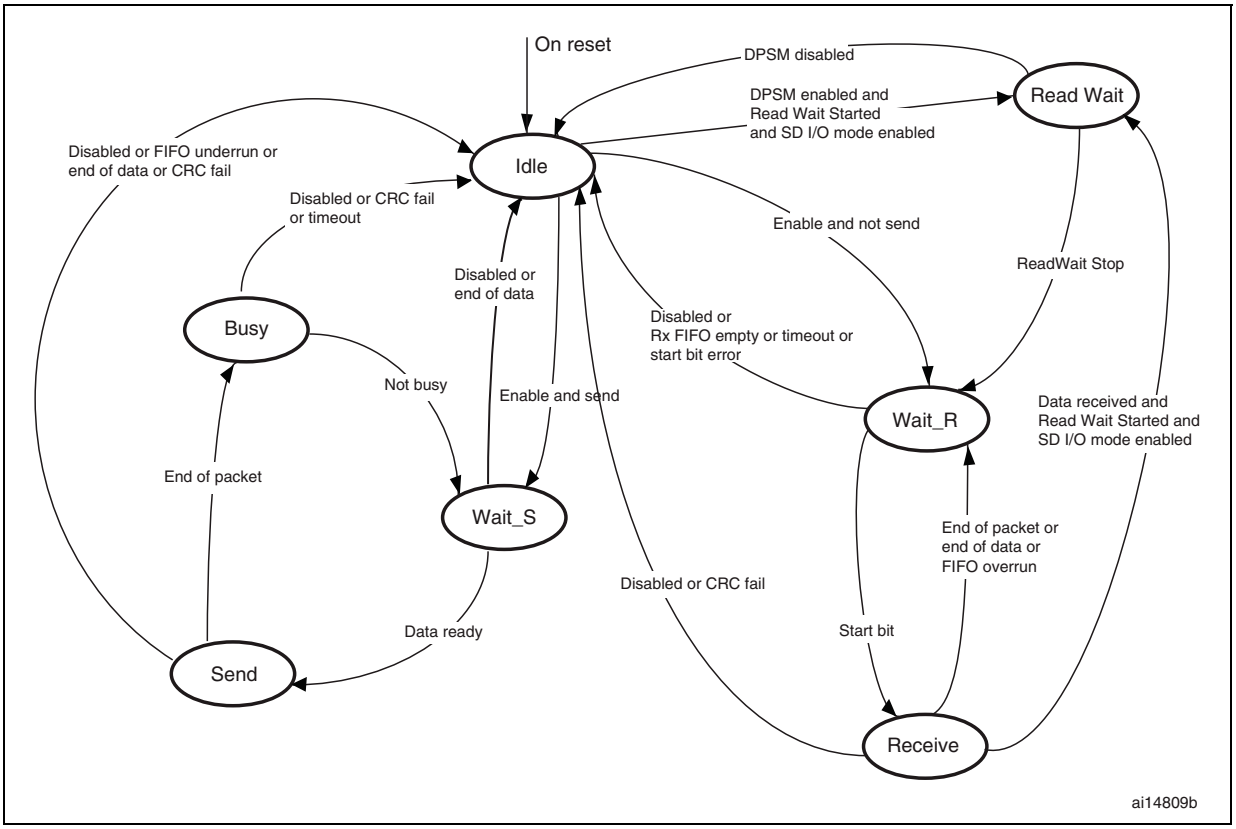

- Idle: the data path is inactive, and the SDMMC_D[7:0] outputs are in Hi-Z. When the data control register is written and the enable bit is set, the DPSM loads the data counter with a new value and, depending on the data direction bit, moves to either the Wait_S or the Wait_R state.
- Wait_R: if the data counter equals zero, the DPSM moves to the Idle state when the receive FIFO is empty. If the data counter is not zero, the DPSM waits for a start bit on SDMMC_D. The DPSM moves to the Receive state if it receives a start bit before a timeout, and loads the data block counter. If it reaches a timeout before it detects a start bit, it moves to the Idle state and sets the timeout status flag.
- Receive: serial data received from a card is packed in bytes and written to the data FIFO. Depending on the transfer mode bit in the data control register, the data transfer mode can be either block or stream:
  - In block mode, when the data block counter reaches zero, the DPSM waits until it receives the CRC code. If the received code matches the internally generated CRC code, the DPSM moves to the Wait_R state. If not, the CRC fail status flag is set and the DPSM moves to the Idle state.
  - In stream mode, the DPSM receives data while the data counter is not zero. When the counter is zero, the remaining data in the shift register is written to the data FIFO, and the DPSM moves to the Wait_R state.

  If a FIFO overrun error occurs, the DPSM sets the FIFO error flag and moves to the Idle state:
- Wait_S: the DPSM moves to the Idle state if the data counter is zero. If not, it waits until the data FIFO empty flag is deasserted, and moves to the Send state.

Note: The DPSM remains in the Wait_S state for at least two clock periods to meet the N_{WR} timing requirements, where N_{WR} is the number of clock cycles between the reception of the card response and the start of the data transfer from the host.

- Send: the DPSM starts sending data to a card. Depending on the transfer mode bit in the data control register, the data transfer mode can be either block or stream:
  - In block mode, when the data block counter reaches zero, the DPSM sends an internally generated CRC code and end bit, and moves to the Busy state.
  - In stream mode, the DPSM sends data to a card while the enable bit is high and the data counter is not zero. It then moves to the Idle state.

  If a FIFO underrun error occurs, the DPSM sets the FIFO error flag and moves to the Idle state.
- Busy: the DPSM waits for the CRC status flag:
  - If it does not receive a positive CRC status, it moves to the Idle state and sets the CRC fail status flag.
  - If it receives a positive CRC status, it moves to the Wait_S state if SDMMC_D0 is not low (the card is not busy).

  If a timeout occurs while the DPSM is in the Busy state, it sets the data timeout flag and moves to the Idle state.

  The data timer is enabled when the DPSM is in the Wait_R or Busy state, and generates the data timeout error:
  - When transmitting data, the timeout occurs if the DPSM stays in the Busy state for longer than the programmed timeout period
  - When receiving data, the timeout occurs if the end of the data is not true, and if the DPSM stays in the Wait_R state for longer than the programmed timeout period.
- **Data:** data can be transferred from the card to the host or vice versa. Data is transferred via the data lines. They are stored in a FIFO of 32 words, each word is 32 bits wide.

Table 190. Data token format

Description	Start bit	Data	CRC16	End bit
Block Data	0	-	yes	1
Stream Data	0	-	no	1

DPSM Flags

The status of the data path subunit transfer is reported by several status flags

Table 191. DPSM flags

Flag	Description
DBCKEND	Set to high when data block send/receive CRC check is passed. In SDIO multibyte transfer mode this flag is set at the end of the transfer (a multibyte transfer is considered as a single block transfer by the host).
DATAEND	Set to high when SDMMC_DCOUNT register decrements and reaches 0. DATAEND indicates the end of a transfer on SDMMC data line.
DTIMEOUT	Set to high when data timeout period is reached. When data timer reaches zero while DPSM is in Wait_R or Busy state, timeout is set. DTIMEOUT can be set after DATAEND if DPSM remains in busy state for longer than the programmed period.
DCRCFAIL	Set to high when data block send/receive CRC check fails.

Data FIFO

The data FIFO (first-in-first-out) subunit is a data buffer with a transmit and receive unit.

The FIFO contains a 32-bit wide, 32-word deep data buffer, and transmit and receive logic. Because the data FIFO operates in the APB2 clock domain (PCLK2), all signals from the subunits in the SDMMC clock domain (SDMMCCLK) are resynchronized.

Depending on the TXACT and RXACT flags, the FIFO can be disabled, transmit enabled, or receive enabled. TXACT and RXACT are driven by the data path subunit and are mutually exclusive:

- The transmit FIFO refers to the transmit logic and data buffer when TXACT is asserted
- The receive FIFO refers to the receive logic and data buffer when RXACT is asserted

- Transmit FIFO:

  Data can be written to the transmit FIFO through the APB2 interface when the SDMMC is enabled for transmission.

  The transmit FIFO is accessible via 32 sequential addresses. The transmit FIFO contains a data output register that holds the data word pointed to by the read pointer. When the data path subunit has loaded its shift register, it increments the read pointer and drives new data out.

  If the transmit FIFO is disabled, all status flags are deasserted. The data path subunit asserts TXACT when it transmits data.

Table 192. Transmit FIFO status flags

Flag	Description
TXFIFOF	Set to high when all 32 transmit FIFO words contain valid data.
TXFIFOE	Set to high when the transmit FIFO does not contain valid data.
TXFIFOHE	Set to high when 8 or more transmit FIFO words are empty. This flag can be used as a DMA request.
TXDAVL	Set to high when the transmit FIFO contains valid data. This flag is the inverse of the TXFIFOE flag.
TXUNDERR	Set to high when an underrun error occurs. This flag is cleared by writing to the SDMMC Clear register. *Note:* In case of TXUNDERR, and DMA is used to fill SDMMC FIFO, *user software should disable DMA stream, and then write DMAEN bit in SDMMC_DCTRL with '0' (to disable DMA request generation).*

- Receive FIFO

  When the data path subunit receives a word of data, it drives the data on the write databus. The write pointer is incremented after the write operation completes. On the read side, the contents of the FIFO word pointed to by the current value of the read pointer is driven onto the read databus. If the receive FIFO is disabled, all status flags are deasserted, and the read and write pointers are reset. The data path subunit asserts RXACT when it receives data. *Table 193* lists the receive FIFO status flags. The receive FIFO is accessible via 32 sequential addresses.

Table 193. Receive FIFO status flags

Flag	Description
RXFIFOF	Set to high when all 32 receive FIFO words contain valid data
RXFIFOE	Set to high when the receive FIFO does not contain valid data.
RXFIFOHF	Set to high when 8 or more receive FIFO words contain valid data. This flag can be used as a DMA request.
RXDAVL	Set to high when the receive FIFO is not empty. This flag is the inverse of the RXFIFOE flag.
RXOVERR	Set to high when an overrun error occurs. This flag is cleared by writing to the SDMMC Clear register. *Note: In case of RXOVERR, and DMA is used to read SDMMC FIFO, user software should disable DMA stream, and then write DMAEN bit in SDMMC_DCTRL with '0' (to disable DMA request generation).*

40.3.2 SDMMC APB2 interface

The APB2 interface generates the interrupt and DMA requests, and accesses the SDMMC adapter registers and the data FIFO. It consists of a data path, register decoder, and interrupt/DMA logic.

SDMMC interrupts

The interrupt logic generates an interrupt request signal that is asserted when at least one of the selected status flags is high. A mask register is provided to allow selection of the conditions that will generate an interrupt. A status flag generates the interrupt request if a corresponding mask flag is set.

SDMMC/DMA interface

SDMMC APB interface controls all subunit to perform transfers between the host and card

Example of read procedure using DMA

Send CMD17 (READ_BLOCK) as follows:

a) Program the SDMMC data length register (SDMMC data timer register should be already programmed before the card identification process)

b) Program DMA channel (please refer to *DMA configuration for SDMMC controller*)

c) Program the SDMMC data control register: DTEN with ‘1’ (SDMMC card host enabled to send data); DTDIR with ‘1’ (from card to controller); DTMODE with ‘0’ (block data transfer); DMAEN with ‘1’ (DMA enabled); DBLOCKSIZE with 0x9 (512 bytes). Other fields are don’t care.

d) Program the SDMMC argument register with the address location of the card from where data is to be transferred

e) Program the SDMMC command register: CmdIndex with 17(READ_BLOCK); WaitResp with ‘1’ (SDMMC card host waits for a response); CPSMEN with ‘1’ (SDMMC card host enabled to send a command). Other fields are at their reset value.

f) Wait for SDMMC_STA[6] = CMDREND interrupt, (CMDREND is set if there is no error on command path).

g) Wait for SDMMC_STA[10] = DBCKEND, (DBCKEND is set in case of no errors until the CRC check is passed)

h) Wait until the FIFO is empty, when FIFO is empty the SDMMC_STA[5] = RXOVERR value has to be check to guarantee that read succeeded

Note: When FIFO overrun error occurs with last 1-4 bytes, it may happens that RXOVERR flag is set 2 APB clock cycles after DATAEND flag is set. To guarantee success of read operation RXOVERR must be cheked after FIFO is empty.

Example of write procedure using DMA

Send CMD24 (WRITE_BLOCK) as follows:

a) Program the SDMMC data length register (SDMMC data timer register should be already programmed before the card identification process)

b) Program DMA channel (please refer to *DMA configuration for SDMMC controller*)

c) Program the SDMMC argument register with the address location of the card from where data is to be transferred

d) Program the SDMMC command register: CmdIndex with 24(WRITE_BLOCK); WaitResp with '1' (SDMMC card host waits for a response); CPSMEN with '1' (SDMMC card host enabled to send a command). Other fields are at their reset value.

e) Wait for SDMMC_STA[6] = CMDREND interrupt, then Program the SDMMC data control register: DTEN with '1' (SDMMC card host enabled to send data); DTDIR with '0' (from controller to card); DTMODE with '0' (block data transfer); DMAEN with '1' (DMA enabled); DBLOCKSIZE with 0x9 (512 bytes). Other fields are don't care.

f) Wait for SDMMC_STA[10] = DBCKEND, (DBCKEND is set in case of no errors)

DMA configuration for SDMMC controller

a) Enable DMA2 controller and clear any pending interrupts

b) Program the DMA2_Channel4 (or DMA2_Channel5) source address register with the memory location base address and DMA2_Channel4 (or DMA2_Channel5) destination address register with the SDMMC_FIFO register address

c) Program DMA2_Channel4 (or DMA2_Channel5) control register (memory increment, not peripheral increment, peripheral and source width is word size)

d) Enable DMA2_Channel4 (or DMA2_Channel5)

40.4 Card functional description

40.4.1 Card identification mode

While in card identification mode the host resets all cards, validates the operation voltage range, identifies cards and sets a relative card address (RCA) for each card on the bus. All data communications in the card identification mode use the command line (CMD) only.

40.4.2 Card reset

The GO_IDLE_STATE command (CMD0) is the software reset command and it puts the MultiMediaCard and SD memory in the Idle state. The IO_RW_DIRECT command (CMD52) resets the SD I/O card. After power-up or CMD0, all cards output bus drivers are in the high-impedance state and the cards are initialized with a default relative card address (RCA=0x0001) and with a default driver stage register setting (lowest speed, highest driving current capability).

40.4.3 Operating voltage range validation

All cards can communicate with the SDMMC card host using any operating voltage within the specification range. The supported minimum and maximum V_{DD} values are defined in the operation conditions register (OCR) on the card.

Cards that store the card identification number (CID) and card specific data (CSD) in the payload memory are able to communicate this information only under data-transfer V_{DD} conditions. When the SDMMC card host module and the card have incompatible V_{DD} ranges, the card is not able to complete the identification cycle and cannot send CSD data. For this purpose, the special commands, SEND_OP_COND (CMD1), SD_APP_OP_COND (ACMD41 for SD Memory), and IO_SEND_OP_COND (CMD5 for SD I/O), are designed to provide a mechanism to identify and reject cards that do not match the V_{DD} range desired by the SDMMC card host. The SDMMC card host sends the required V_{DD} voltage window as the operand of these commands. Cards that cannot perform data transfer in the specified range disconnect from the bus and go to the inactive state.

By using these commands without including the voltage range as the operand, the SDMMC card host can query each card and determine the common voltage range before placing out-of-range cards in the inactive state. This query is used when the SDMMC card host is able to select a common voltage range or when the user requires notification that cards are not usable.

40.4.4 Card identification process

The card identification process differs for MultiMediaCards and SD cards. For MultiMediaCard cards, the identification process starts at clock rate F_{od}. The SDMMC_CMD line output drivers are open-drain and allow parallel card operation during this process. The registration process is accomplished as follows:

1. The bus is activated.
2. The SDMMC card host broadcasts SEND_OP_COND (CMD1) to receive operation conditions.
3. The response is the wired AND operation of the operation condition registers from all cards.
4. Incompatible cards are placed in the inactive state.
5. The SDMMC card host broadcasts ALL_SEND_CID (CMD2) to all active cards.
6. The active cards simultaneously send their CID numbers serially. Cards with outgoing CID bits that do not match the bits on the command line stop transmitting and must wait for the next identification cycle. One card successfully transmits a full CID to the SDMMC card host and enters the Identification state.
7. The SDMMC card host issues SET_RELATIVE_ADDR (CMD3) to that card. This new address is called the relative card address (RCA); it is shorter than the CID and addresses the card. The assigned card changes to the Standby state, it does not react to further identification cycles, and its output switches from open-drain to push-pull.
8. The SDMMC card host repeats steps 5 through 7 until it receives a timeout condition.

For the SD card, the identification process starts at clock rate F_{od}, and the SDMMC_CMD line output drives are push-pull drivers instead of open-drain. The registration process is accomplished as follows:

1. The bus is activated.
2. The SDMMC card host broadcasts SD_APP_OP_COND (ACMD41).
3. The cards respond with the contents of their operation condition registers.
4. The incompatible cards are placed in the inactive state.
5. The SDMMC card host broadcasts ALL_SEND_CID (CMD2) to all active cards.
6. The cards send back their unique card identification numbers (CIDs) and enter the Identification state.
7. The SDMMC card host issues SET_RELATIVE_ADDR (CMD3) to an active card with an address. This new address is called the relative card address (RCA); it is shorter than the CID and addresses the card. The assigned card changes to the Standby state. The SDMMC card host can reissue this command to change the RCA. The RCA of the card is the last assigned value.
8. The SDMMC card host repeats steps 5 through 7 with all active cards.

For the SD I/O card, the registration process is accomplished as follows:

1. The bus is activated.
2. The SDMMC card host sends IO_SEND_OP_COND (CMD5).
3. The cards respond with the contents of their operation condition registers.
4. The incompatible cards are set to the inactive state.
5. The SDMMC card host issues SET_RELATIVE_ADDR (CMD3) to an active card with an address. This new address is called the relative card address (RCA); it is shorter than the CID and addresses the card. The assigned card changes to the Standby state. The SDMMC card host can reissue this command to change the RCA. The RCA of the card is the last assigned value.

40.4.5 Block write

During block write (CMD24 - 27) one or more blocks of data are transferred from the host to the card with a CRC appended to the end of each block by the host. A card supporting block write is always able to accept a block of data defined by WRITE_BL_LEN. If the CRC fails, the card indicates the failure on the SDMMC_D line and the transferred data are discarded and not written, and all further transmitted blocks (in multiple block write mode) are ignored.

If the host uses partial blocks whose accumulated length is not block aligned and, block misalignment is not allowed (CSD parameter WRITE_BLK_MISALIGN is not set), the card will detect the block misalignment error before the beginning of the first misaligned block. (ADDRESS_ERROR error bit is set in the status register). The write operation will also be aborted if the host tries to write over a write-protected area. In this case, however, the card will set the WP_VIOLATION bit.

Programming of the CID and CSD registers does not require a previous block length setting. The transferred data is also CRC protected. If a part of the CSD or CID register is stored in ROM, then this unchangeable part must match the corresponding part of the receive buffer. If this match fails, then the card reports an error and does not change any register contents. Some cards may require long and unpredictable times to write a block of data. After receiving a block of data and completing the CRC check, the card begins writing and holds the SDMMC_D line low if its write buffer is full and unable to accept new data from a new WRITE_BLOCK command. The host may poll the status of the card with a SEND_STATUS command (CMD13) at any time, and the card will respond with its status. The READY_FOR_DATA status bit indicates whether the card can accept new data or whether the write process is still in progress. The host may deselect the card by issuing CMD7 (to

select a different card), which will place the card in the Disconnect state and release the SDMMC_D line(s) without interrupting the write operation. When reselecting the card, it will reactivate busy indication by pulling SDMMC_D to low if programming is still in progress and the write buffer is unavailable.

40.4.6 Block read

In Block read mode the basic unit of data transfer is a block whose maximum size is defined in the CSD (READ_BL_LEN). If READ_BL_PARTIAL is set, smaller blocks whose start and end addresses are entirely contained within one physical block (as defined by READ_BL_LEN) may also be transmitted. A CRC is appended to the end of each block, ensuring data transfer integrity. CMD17 (READ_SINGLE_BLOCK) initiates a block read and after completing the transfer, the card returns to the Transfer state.

CMD18 (READ_MULTIPLE_BLOCK) starts a transfer of several consecutive blocks.

The host can abort reading at any time, within a multiple block operation, regardless of its type. Transaction abort is done by sending the stop transmission command.

If the card detects an error (for example, out of range, address misalignment or internal error) during a multiple block read operation (both types) it stops the data transmission and remains in the data state. The host must than abort the operation by sending the stop transmission command. The read error is reported in the response to the stop transmission command.

If the host sends a stop transmission command after the card transmits the last block of a multiple block operation with a predefined number of blocks, it is responded to as an illegal command, since the card is no longer in the data state. If the host uses partial blocks whose accumulated length is not block-aligned and block misalignment is not allowed, the card detects a block misalignment error condition at the beginning of the first misaligned block (ADDRESS_ERROR error bit is set in the status register).

40.4.7 Stream access, stream write and stream read (MultiMediaCard only)

In stream mode, data is transferred in bytes and no CRC is appended at the end of each block.

Stream write (MultiMediaCard only)

WRITE_DAT_UNTIL_STOP (CMD20) starts the data transfer from the SDMMC card host to the card, beginning at the specified address and continuing until the SDMMC card host issues a stop command. When partial blocks are allowed (CSD parameter WRITE_BL_PARTIAL is set), the data stream can start and stop at any address within the card address space, otherwise it can only start and stop at block boundaries. Because the amount of data to be transferred is not determined in advance, a CRC cannot be used. When the end of the memory range is reached while sending data and no stop command is sent by the SDMMC card host, any additional transferred data are discarded.

The maximum clock frequency for a stream write operation is given by the following equation fields of the card-specific data register:

$$\text{Maximumspeed} = \text{MIN}(\text{TRANSPEED}, \frac{(8 \times 2^{\text{writebllen}})(-\text{NSAC})}{\text{TAAC} \times \text{R2WFACTOR}})$$

- Maximumspeed = maximum write frequency
- TRANSPEED = maximum data transfer rate
- writebllen = maximum write data block length
- NSAC = data read access time 2 in CLK cycles
- TAAC = data read access time 1
- R2WFACTOR = write speed factor

If the host attempts to use a higher frequency, the card may not be able to process the data and stop programming, set the OVERRUN error bit in the status register, and while ignoring all further data transfer, wait (in the receive data state) for a stop command. The write operation is also aborted if the host tries to write over a write-protected area. In this case, however, the card sets the WP_VIOLATION bit.

Stream read (MultiMediaCard only)

READ_DAT_UNTIL_STOP (CMD11) controls a stream-oriented data transfer.

This command instructs the card to send its data, starting at a specified address, until the SDMMC card host sends STOP_TRANSMISSION (CMD12). The stop command has an execution delay due to the serial command transmission and the data transfer stops after the end bit of the stop command. When the end of the memory range is reached while sending data and no stop command is sent by the SDMMC card host, any subsequent data sent are considered undefined.

The maximum clock frequency for a stream read operation is given by the following equation and uses fields of the card specific data register.

$$\text{Maximumspeed} = \text{MIN}(\text{TRANSPEED}, \frac{(8 \times 2^{\text{readbllen}})(-\text{NSAC})}{\text{TAAC} \times \text{R2WFACTOR}})$$

- Maximumspeed = maximum read frequency
- TRANSPEED = maximum data transfer rate
- readbllen = maximum read data block length
- writebllen = maximum write data block length
- NSAC = data read access time 2 in CLK cycles
- TAAC = data read access time 1
- R2WFACTOR = write speed factor

If the host attempts to use a higher frequency, the card is not able to sustain data transfer. If this happens, the card sets the UNDERRUN error bit in the status register, aborts the transmission and waits in the data state for a stop command.

40.4.8 Erase: group erase and sector erase

The erasable unit of the MultiMediaCard is the erase group. The erase group is measured in write blocks, which are the basic writable units of the card. The size of the erase group is a card-specific parameter and defined in the CSD.

The host can erase a contiguous range of Erase Groups. Starting the erase process is a three-step sequence.

First the host defines the start address of the range using the ERASE_GROUP_START (CMD35) command, next it defines the last address of the range using the ERASE_GROUP_END (CMD36) command and, finally, it starts the erase process by issuing the ERASE (CMD38) command. The address field in the erase commands is an Erase Group address in byte units. The card ignores all LSBs below the Erase Group size, effectively rounding the address down to the Erase Group boundary.

If an erase command is received out of sequence, the card sets the ERASE_SEQ_ERROR bit in the status register and resets the whole sequence.

If an out-of-sequence (neither of the erase commands, except SEND_STATUS) command received, the card sets the ERASE_RESET status bit in the status register, resets the erase sequence and executes the last command.

If the erase range includes write protected blocks, they are left intact and only nonprotected blocks are erased. The WP_ERASE_SKIP status bit in the status register is set.

The card indicates that an erase is in progress by holding SDMMC_D low. The actual erase time may be quite long, and the host may issue CMD7 to deselect the card.

40.4.9 Wide bus selection or deselection

Wide bus (4-bit bus width) operation mode is selected or deselected using SET_BUS_WIDTH (ACMD6). The default bus width after power-up or GO_IDLE_STATE (CMD0) is 1 bit. SET_BUS_WIDTH (ACMD6) is only valid in a transfer state, which means that the bus width can be changed only after a card is selected by SELECT/DESELECT_CARD (CMD7).

40.4.10 Protection management

Three write protection methods for the cards are supported in the SDMMC card host module:

1. internal card write protection (card responsibility)
2. mechanical write protection switch (SDMMC card host module responsibility only)
3. password-protected card lock operation

Internal card write protection

Card data can be protected against write and erase. By setting the permanent or temporary write-protect bits in the CSD, the entire card can be permanently write-protected by the manufacturer or content provider. For cards that support write protection of groups of sectors by setting the WP_GRP_ENABLE bit in the CSD, portions of the data can be protected, and the write protection can be changed by the application. The write protection is in units of WP_GRP_SIZE sectors as specified in the CSD. The SET_WRITE_PROT and CLR_WRITE_PROT commands control the protection of the addressed group. The SEND_WRITE_PROT command is similar to a single block read command. The card sends

a data block containing 32 write protection bits (representing 32 write protect groups starting at the specified address) followed by 16 CRC bits. The address field in the write protect commands is a group address in byte units.

The card ignores all LSBs below the group size.

Mechanical write protect switch

A mechanical sliding tab on the side of the card allows the user to set or clear the write protection on a card. When the sliding tab is positioned with the window open, the card is write-protected, and when the window is closed, the card contents can be changed. A matched switch on the socket side indicates to the SDMMC card host module that the card is write-protected. The SDMMC card host module is responsible for protecting the card. The position of the write protect switch is unknown to the internal circuitry of the card.

Password protect

The password protection feature enables the SDMMC card host module to lock and unlock a card with a password. The password is stored in the 128-bit PWD register and its size is set in the 8-bit PWD_LEN register. These registers are nonvolatile so that a power cycle does not erase them. Locked cards respond to and execute certain commands. This means that the SDMMC card host module is allowed to reset, initialize, select, and query for status, however it is not allowed to access data on the card. When the password is set (as indicated by a nonzero value of PWD_LEN), the card is locked automatically after power-up. As with the CSD and CID register write commands, the lock/unlock commands are available in the transfer state only. In this state, the command does not include an address argument and the card must be selected before using it. The card lock/unlock commands have the structure and bus transaction types of a regular single-block write command. The transferred data block includes all of the required information for the command (the password setting mode, the PWD itself, and card lock/unlock). The command data block size is defined by the SDMMC card host module before it sends the card lock/unlock command, and has the structure shown in *Table 207*.

The bit settings are as follows:

- ERASE: setting it forces an erase operation. All other bits must be zero, and only the command byte is sent
- LOCK_UNLOCK: setting it locks the card. LOCK_UNLOCK can be set simultaneously with SET_PWD, however not with CLR_PWD
- CLR_PWD: setting it clears the password data
- SET_PWD: setting it saves the password data to memory
- PWD_LEN: it defines the length of the password in bytes
- PWD: the password (new or currently used, depending on the command)

The following sections list the command sequences to set/reset a password, lock/unlock the card, and force an erase.

Setting the password

1. Select a card (SELECT/DESELECT_CARD, CMD7), if none is already selected.
2. Define the block length (SET_BLOCKLEN, CMD16) to send, given by the 8-bit card lock/unlock mode, the 8-bit PWD_LEN, and the number of bytes of the new password.

When a password replacement is done, the block size must take into account that both the old and the new passwords are sent with the command.

3. Send LOCK/UNLOCK (CMD42) with the appropriate data block size on the data line including the 16-bit CRC. The data block indicates the mode (SET_PWD = 1), the length (PWD_LEN), and the password (PWD) itself. When a password replacement is done, the length value (PWD_LEN) includes the length of both passwords, the old and the new one, and the PWD field includes the old password (currently used) followed by the new password.
4. When the password is matched, the new password and its size are saved into the PWD and PWD_LEN fields, respectively. When the old password sent does not correspond (in size and/or content) to the expected password, the LOCK_UNLOCK_FAILED error bit is set in the card status register, and the password is not changed.

The password length field (PWD_LEN) indicates whether a password is currently set. When this field is nonzero, there is a password set and the card locks itself after power-up. It is possible to lock the card immediately in the current power session by setting the LOCK_UNLOCK bit (while setting the password) or sending an additional command for card locking.

Resetting the password

1. Select a card (SELECT/DESELECT_CARD, CMD7), if none is already selected.
2. Define the block length (SET_BLOCKLEN, CMD16) to send, given by the 8-bit card lock/unlock mode, the 8-bit PWD_LEN, and the number of bytes in the currently used password.
3. Send LOCK/UNLOCK (CMD42) with the appropriate data block size on the data line including the 16-bit CRC. The data block indicates the mode (CLR_PWD = 1), the length (PWD_LEN) and the password (PWD) itself. The LOCK_UNLOCK bit is ignored.
4. When the password is matched, the PWD field is cleared and PWD_LEN is set to 0. When the password sent does not correspond (in size and/or content) to the expected password, the LOCK_UNLOCK_FAILED error bit is set in the card status register, and the password is not changed.

Locking a card

1. Select a card (SELECT/DESELECT_CARD, CMD7), if none is already selected.
2. Define the block length (SET_BLOCKLEN, CMD16) to send, given by the 8-bit card lock/unlock mode (byte 0 in *Table 207*), the 8-bit PWD_LEN, and the number of bytes of the current password.
3. Send LOCK/UNLOCK (CMD42) with the appropriate data block size on the data line including the 16-bit CRC. The data block indicates the mode (LOCK_UNLOCK = 1), the length (PWD_LEN), and the password (PWD) itself.
4. When the password is matched, the card is locked and the CARD_IS_LOCKED status bit is set in the card status register. When the password sent does not correspond (in size and/or content) to the expected password, the LOCK_UNLOCK_FAILED error bit is set in the card status register, and the lock fails.

It is possible to set the password and to lock the card in the same sequence. In this case, the SDMMC card host module performs all the required steps for setting the password (see *Setting the password on page 1271*), however it is necessary to set the LOCK_UNLOCK bit in Step 3 when the new password command is sent.

When the password is previously set (PWD_LEN is not 0), the card is locked automatically after power on reset. An attempt to lock a locked card or to lock a card that does not have a password fails and the LOCK_UNLOCK_FAILED error bit is set in the card status register.

Unlocking the card

1. Select a card (SELECT/DESELECT_CARD, CMD7), if none is already selected.
2. Define the block length (SET_BLOCKLEN, CMD16) to send, given by the 8-bit cardlock/unlock mode (byte 0 in *Table 207*), the 8-bit PWD_LEN, and the number of bytes of the current password.
3. Send LOCK/UNLOCK (CMD42) with the appropriate data block size on the data line including the 16-bit CRC. The data block indicates the mode (LOCK_UNLOCK = 0), the length (PWD_LEN), and the password (PWD) itself.
4. When the password is matched, the card is unlocked and the CARD_IS_LOCKED status bit is cleared in the card status register. When the password sent is not correct in size and/or content and does not correspond to the expected password, the LOCK_UNLOCK_FAILED error bit is set in the card status register, and the card remains locked.

The unlocking function is only valid for the current power session. When the PWD field is not clear, the card is locked automatically on the next power-up.

An attempt to unlock an unlocked card fails and the LOCK_UNLOCK_FAILED error bit is set in the card status register.

Forcing erase

If the user has forgotten the password (PWD content), it is possible to access the card after clearing all the data on the card. This forced erase operation erases all card data and all password data.

1. Select a card (SELECT/DESELECT_CARD, CMD7), if none is already selected.
2. Set the block length (SET_BLOCKLEN, CMD16) to 1 byte. Only the 8-bit card lock/unlock byte (byte 0 in *Table 207*) is sent.
3. Send LOCK/UNLOCK (CMD42) with the appropriate data byte on the data line including the 16-bit CRC. The data block indicates the mode (ERASE = 1). All other bits must be zero.
4. When the ERASE bit is the only bit set in the data field, all card contents are erased, including the PWD and PWD_LEN fields, and the card is no longer locked. When any other bits are set, the LOCK_UNLOCK_FAILED error bit is set in the card status register and the card retains all of its data, and remains locked.

An attempt to use a force erase on an unlocked card fails and the LOCK_UNLOCK_FAILED error bit is set in the card status register.

40.4.11 Card status register

The response format R1 contains a 32-bit field named card status. This field is intended to transmit the card status information (which may be stored in a local status register) to the host. If not specified otherwise, the status entries are always related to the previously issued command.

Table 194 defines the different entries of the status. The type and clear condition fields in the table are abbreviated as follows:

Type:

- E: error bit
- S: status bit
- R: detected and set for the actual command response
- X: detected and set during command execution. The SDMMC card host must poll the card by issuing the status command to read these bits.

Clear condition:

- A: according to the card current state
- B: always related to the previous command. Reception of a valid command clears it (with a delay of one command)
- C: clear by read

Table 194. Card status

Bits	Identifier	Type	Value	Description	Clear condition
31	ADDRESS_ OUT_OF_RANGE	E R X	’0’= no error ’1’= error	The command address argument was out of the allowed range for this card. A multiple block or stream read/write operation is (although started in a valid address) attempting to read or write beyond the card capacity.	C
30	ADDRESS_MISALIGN		’0’= no error ’1’= error	The commands address argument (in accordance with the currently set block length) positions the first data block misaligned to the card physical blocks. A multiple block read/write operation (although started with a valid address/block-length combination) is attempting to read or write a data block which is not aligned with the physical blocks of the card.	C
29	BLOCK_LEN_ERROR		’0’= no error ’1’= error	Either the argument of a SET_BLOCKLEN command exceeds the maximum value allowed for the card, or the previously defined block length is illegal for the current command (e.g. the host issues a write command, the current block length is smaller than the maximum allowed value for the card and it is not allowed to write partial blocks)	C

Table 194. Card status (continued)

Bits	Identifier	Type	Value	Description	Clear condition
28	ERASE_SEQ_ERROR		’0’= no error ’1’= error	An error in the sequence of erase commands occurred.	C
27	ERASE_PARAM	E X	’0’= no error ’1’= error	An invalid selection of erase groups for erase occurred.	C
26	WP_VIOLATION	E X	’0’= no error ’1’= error	Attempt to program a write-protected block.	C
25	CARD_IS_LOCKED	S R	‘0’ = card unlocked ‘1’ = card locked	When set, signals that the card is locked by the host	A
24	LOCK_UNLOCK_ FAILED	E X	’0’= no error ’1’= error	Set when a sequence or password error has been detected in lock/unlock card command	C
23	COM_CRC_ERROR	E R	’0’= no error ’1’= error	The CRC check of the previous command failed.	B
22	ILLEGAL_COMMAND	E R	’0’= no error ’1’= error	Command not legal for the card state	B
21	CARD_ECC_FAILED	E X	’0’= success ’1’= failure	Card internal ECC was applied but failed to correct the data.	C
20	CC_ERROR	E R	’0’= no error ’1’= error	(Undefined by the standard) A card error occurred, which is not related to the host command.	C
19	ERROR	E X	’0’= no error ’1’= error	(Undefined by the standard) A generic card error related to the (and detected during) execution of the last host command (e.g. read or write failures).	C
18	Reserved				
17	Reserved				
16	CID/CSD_OVERWRITE	E X	’0’= no error ‘1’= error	Can be either of the following errors: – The CID register has already been written and cannot be overwritten – The read-only section of the CSD does not match the card contents – An attempt to reverse the copy (set as original) or permanent WP (unprotected) bits was made	C
15	WP_ERASE_SKIP	E X	’0’= not protected ’1’= protected	**Set when only partial address space was erased due to existing write**	C
14	CARD_ECC_DISABLED	S X	’0’= enabled ’1’= disabled	The command has been executed without using the internal ECC.	A

Table 194. Card status (continued)

Bits	Identifier	Type	Value	Description	Clear condition
13	ERASE_RESET		’0’= cleared ’1’= set	An erase sequence was cleared before executing because an out of erase sequence command was received (commands other than CMD35, CMD36, CMD38 or CMD13)	C
12:9	CURRENT_STATE	S R	0 = Idle 1 = Ready 2 = Ident 3 = Stby 4 = Tran 5 = Data 6 = Rcv 7 = Prg 8 = Dis 9 = Btst 10-15 = reserved	The state of the card when receiving the command. If the command execution causes a state change, it will be visible to the host in the response on the next command. The four bits are interpreted as a binary number between 0 and 15.	B
8	READY_FOR_DATA	S R	’0’= not ready ‘1’ = ready	Corresponds to buffer empty signalling on the bus	-
7	SWITCH_ERROR	E X	’0’= no error ’1’= switch error	If set, the card did not switch to the expected mode as requested by the SWITCH command	B
6	Reserved				
5	APP_CMD	S R	‘0’ = Disabled ‘1’ = Enabled	The card will expect ACMD, or an indication that the command has been interpreted as ACMD	C
4	Reserved for SD I/O Card				
3	AKE_SEQ_ERROR	E R	’0’= no error ’1’= error	Error in the sequence of the authentication process	C
2	Reserved for application specific commands				
1	Reserved for manufacturer test mode				
0					

40.4.12 SD status register

The SD status contains status bits that are related to the SD memory card proprietary features and may be used for future application-specific usage. The size of the SD Status is one data block of 512 bits. The contents of this register are transmitted to the SDMMC card host if ACMD13 is sent (CMD55 followed with CMD13). ACMD13 can be sent to a card in transfer state only (card is selected).

Table 195 defines the different entries of the SD status register. The type and clear condition fields in the table are abbreviated as follows:

Type:

- E: error bit
- S: status bit
- R: detected and set for the actual command response
- X: detected and set during command execution. The SDMMC card Host must poll the card by issuing the status command to read these bits

Clear condition:

- A: according to the card current state
- B: always related to the previous command. Reception of a valid command clears it (with a delay of one command)
- C: clear by read

Table 195. SD status

Bits	Identifier	Type	Value	Description	Clear condition
511: 510	DAT_BUS_WIDTH	S R	’00’= 1 (default) ‘01’= reserved ‘10’= 4 bit width ‘11’= reserved	Shows the currently defined databus width that was defined by SET_BUS_WIDTH command	A
509	SECURED_MODE	S R	’0’= Not in the mode ’1’= In Secured Mode	Card is in Secured Mode of operation (refer to the “SD Security Specification”).	A
508: 496	Reserved				
495: 480	SD_CARD_TYPE	S R	’00xxh’= SD Memory Cards as defined in Physical Spec Ver1.01-2.00 (’x’= don’t care). The following cards are currently defined: ’0000’= Regular SD RD/WR Card. ’0001’= SD ROM Card	In the future, the 8 LSBs will be used to define different variations of an SD memory card (each bit will define different SD types). The 8 MSBs will be used to define SD Cards that do not comply with current SD physical layer specification.	A
479: 448	SIZE_OF_PROTECT ED_AREA	S R	Size of protected area (See below)	(See below)	A
447: 440	SPEED_CLASS	S R	Speed Class of the card (See below)	(See below)	A

Table 195. SD status (continued)

Bits	Identifier	Type	Value	Description	Clear condition
439: 432	PERFORMANCE_ MOVE	S R	Performance of move indicated by 1 [MB/s] step. (See below)	(See below)	A
431:428	AU_SIZE	S R	Size of AU (See below)	(See below)	A
427:424	Reserved				
423:408	ERASE_SIZE	S R	Number of AUs to be erased at a time	(See below)	A
407:402	ERASE_TIMEOUT	S R	Timeout value for erasing areas specified by UNIT_OF_ERASE_AU	(See below)	A
401:400	ERASE_OFFSET	S R	Fixed offset value added to erase time.	(See below)	A
399:312	Reserved				
311:0	Reserved for Manufacturer				

SIZE_OF_PROTECTED_AREA

Setting this field differs between standard- and high-capacity cards. In the case of a standard-capacity card, the capacity of protected area is calculated as follows:

Protected area = SIZE_OF_PROTECTED_AREA_* MULT * BLOCK_LEN.

SIZE_OF_PROTECTED_AREA is specified by the unit in MULT*BLOCK_LEN.

In the case of a high-capacity card, the capacity of protected area is specified in this field:

Protected area = SIZE_OF_PROTECTED_AREA

SIZE_OF_PROTECTED_AREA is specified by the unit in bytes.

SPEED_CLASS

This 8-bit field indicates the speed class and the value can be calculated by $P_W/2$ (where P_W is the write performance).

Table 196. Speed class code field

SPEED_CLASS	Value definition
00h	Class 0
01h	Class 2
02h	Class 4
03h	Class 6
04h – FFh	Reserved

PERFORMANCE_MOVE

This 8-bit field indicates Pm (performance move) and the value can be set by 1 [MB/sec] steps. If the card does not move used RUs (recording units), Pm should be considered as infinity. Setting the field to FFh means infinity.

Table 197. Performance move field

PERFORMANCE_MOVE	Value definition
00h	Not defined
01h	1 [MB/sec]
02h	02h 2 [MB/sec]
---------	---------
FEh	254 [MB/sec]
FFh	Infinity

AU_SIZE

This 4-bit field indicates the AU size and the value can be selected in the power of 2 base from 16 KB.

Table 198. AU_SIZE field

AU_SIZE	Value definition
00h	Not defined
01h	16 KB
02h	32 KB
03h	64 KB
04h	128 KB
05h	256 KB
06h	512 KB
07h	1 MB
08h	2 MB
09h	4 MB
Ah – Fh	Reserved

The maximum AU size, which depends on the card capacity, is defined in *Table 199*. The card can be set to any AU size between RU size and maximum AU size.

Table 199. Maximum AU size

Capacity	16 MB-64 MB	128 MB-256 MB	512 MB	1 GB-32 GB
Maximum AU Size	512 KB	1 MB	2 MB	4 MB

ERASE_SIZE

This 16-bit field indicates N_{ERASE}. When N_{ERASE} numbers of AUs are erased, the timeout value is specified by ERASE_TIMEOUT (Refer to *ERASE_TIMEOUT*). The host should determine the proper number of AUs to be erased in one operation so that the host can show the progress of the erase operation. If this field is set to 0, the erase timeout calculation is not supported.

Table 200. Erase size field

ERASE_SIZE	Value definition
0000h	Erase timeout calculation is not supported.
0001h	1 AU
0002h	2 AU
0003h	3 AU
---------	---------
FFFFh	65535 AU

ERASE_TIMEOUT

This 6-bit field indicates T_{ERASE} and the value indicates the erase timeout from offset when multiple AUs are being erased as specified by ERASE_SIZE. The range of ERASE_TIMEOUT can be defined as up to 63 seconds and the card manufacturer can choose any combination of ERASE_SIZE and ERASE_TIMEOUT depending on the implementation. Determining ERASE_TIMEOUT determines the ERASE_SIZE.

Table 201. Erase timeout field

ERASE_TIMEOUT	Value definition
00	Erase timeout calculation is not supported.
01	1 [sec]
02	2 [sec]
03	3 [sec]
---------	---------
63	63 [sec]

ERASE_OFFSET

This 2-bit field indicates T_{OFFSET} and one of four values can be selected. This field is meaningless if the ERASE_SIZE and ERASE_TIMEOUT fields are set to 0.

Table 202. Erase offset field

ERASE_OFFSET	Value definition
0h	0 [sec]
1h	1 [sec]

Table 202. Erase offset field (continued)

ERASE_OFFSET	Value definition
2h	2 [sec]
3h	3 [sec]

40.4.13 SD I/O mode

SD I/O interrupts

To allow the SD I/O card to interrupt the MultiMediaCard/SD module, an interrupt function is available on a pin on the SD interface. Pin 8, used as SDMMC_D1 when operating in the 4-bit SD mode, signals the cards interrupt to the MultiMediaCard/SD module. The use of the interrupt is optional for each card or function within a card. The SD I/O interrupt is level-sensitive, which means that the interrupt line must be held active (low) until it is either recognized and acted upon by the MultiMediaCard/SD module or deasserted due to the end of the interrupt period. After the MultiMediaCard/SD module has serviced the interrupt, the interrupt status bit is cleared via an I/O write to the appropriate bit in the SD I/O card's internal registers. The interrupt output of all SD I/O cards is active low and the application must provide pull-up resistors externally on all data lines (SDMMC_D[3:0]). The MultiMediaCard/SD module samples the level of pin 8 (SDMMC_D/IRQ) into the interrupt detector only during the interrupt period. At all other times, the MultiMediaCard/SD module ignores this value.

The interrupt period is applicable for both memory and I/O operations. The definition of the interrupt period for operations with single blocks is different from the definition for multiple-block data transfers.

SD I/O suspend and resume

Within a multifunction SD I/O or a card with both I/O and memory functions, there are multiple devices (I/O and memory) that share access to the MMC/SD bus. To share access to the MMC/SD module among multiple devices, SD I/O and combo cards optionally implement the concept of suspend/resume. When a card supports suspend/resume, the MMC/SD module can temporarily halt a data transfer operation to one function or memory (suspend) to free the bus for a higher-priority transfer to a different function or memory. After this higher-priority transfer is complete, the original transfer is resumed (restarted) where it left off. Support of suspend/resume is optional on a per-card basis. To perform the suspend/resume operation on the MMC/SD bus, the MMC/SD module performs the following steps:

1. Determines the function currently using the SDMMC_D [3:0] line(s)
2. Requests the lower-priority or slower transaction to suspend
3. Waits for the transaction suspension to complete
4. Begins the higher-priority transaction
5. Waits for the completion of the higher priority transaction
6. Restores the suspended transaction

SD I/O ReadWait

The optional ReadWait (RW) operation is defined only for the SD 1-bit and 4-bit modes. The ReadWait operation allows the MMC/SD module to signal a card that it is reading multiple

registers (IO_RW_EXTENDED, CMD53) to temporarily stall the data transfer while allowing the MMC/SD module to send commands to any function within the SD I/O device. To determine when a card supports the ReadWait protocol, the MMC/SD module must test capability bits in the internal card registers. The timing for ReadWait is based on the interrupt period.

40.4.14 Commands and responses

Application-specific and general commands

The SDMMC card host module system is designed to provide a standard interface for a variety of applications types. In this environment, there is a need for specific customer/application features. To implement these features, two types of generic commands are defined in the standard: application-specific commands (ACMD) and general commands (GEN_CMD).

When the card receives the APP_CMD (CMD55) command, the card expects the next command to be an application-specific command. ACMDs have the same structure as regular MultiMediaCard commands and can have the same CMD number. The card recognizes it as ACMD because it appears after APP_CMD (CMD55). When the command immediately following the APP_CMD (CMD55) is not a defined application-specific command, the standard command is used. For example, when the card has a definition for SD_STATUS (ACMD13), and receives CMD13 immediately following APP_CMD (CMD55), this is interpreted as SD_STATUS (ACMD13). However, when the card receives CMD7 immediately following APP_CMD (CMD55) and the card does not have a definition for ACMD7, this is interpreted as the standard (SELECT/DESELECT_CARD) CMD7.

To use one of the manufacturer-specific ACMDs the SD card Host must perform the following steps:

1. Send APP_CMD (CMD55)
   The card responds to the MultiMediaCard/SD module, indicating that the APP_CMD bit is set and an ACMD is now expected.
2. Send the required ACMD
   The card responds to the MultiMediaCard/SD module, indicating that the APP_CMD bit is set and that the accepted command is interpreted as an ACMD. When a nonACMD is sent, it is handled by the card as a normal MultiMediaCard command and the APP_CMD bit in the card status register stays clear.

When an invalid command is sent (neither ACMD nor CMD) it is handled as a standard MultiMediaCard illegal command error.

The bus transaction for a GEN_CMD is the same as the single-block read or write commands (WRITE_BLOCK, CMD24 or READ_SINGLE_BLOCK,CMD17). In this case, the argument denotes the direction of the data transfer rather than the address, and the data block has vendor-specific format and meaning.

The card must be selected (in transfer state) before sending GEN_CMD (CMD56). The data block size is defined by SET_BLOCKLEN (CMD16). The response to GEN_CMD (CMD56) is in R1b format.

Command types

Both application-specific and general commands are divided into the four following types:

- **broadcast command (BC)**: sent to all cards; no responses returned.
- **broadcast command with response (BCR):** sent to all cards; responses received from all cards simultaneously.
- **addressed (point-to-point) command (AC):** sent to the card that is selected; does not include a data transfer on the SDMMC_D line(s).
- **addressed (point-to-point) data transfer command (ADTC):** sent to the card that is selected; includes a data transfer on the SDMMC_D line(s).

Command formats

See *Table 186 on page 1257* for command formats.

Commands for the MultiMediaCard/SD module

Table 203. Block-oriented write commands

CMD index	Type	Argument	Response format	Abbreviation	Description
CMD23	ac	[31:16] set to 0 [15:0] number of blocks	R1	SET_BLOCK_COUNT	Defines the number of blocks which are going to be transferred in the multiple-block read or write command that follows.
CMD24	adtc	[31:0] data address	R1	WRITE_BLOCK	Writes a block of the size selected by the SET_BLOCKLEN command.
CMD25	adtc	[31:0] data address	R1	WRITE_MULTIPLE_BLOCK	Continuously writes blocks of data until a STOP_TRANSMISSION follows or the requested number of blocks has been received.
CMD26	adtc	[31:0] stuff bits	R1	PROGRAM_CID	Programming of the card identification register. This command must be issued only once per card. The card contains hardware to prevent this operation after the first programming. Normally this command is reserved for manufacturer.
CMD27	adtc	[31:0] stuff bits	R1	PROGRAM_CSD	Programming of the programmable bits of the CSD.

Table 204. Block-oriented write protection commands

CMD index	Type	Argument	Response format	Abbreviation	Description
CMD28	ac	[31:0] data address	R1b	SET_WRITE_PROT	If the card has write protection features, this command sets the write protection bit of the addressed group. The properties of write protection are coded in the card-specific data (WP_GRP_SIZE).
CMD29	ac	[31:0] data address	R1b	CLR_WRITE_PROT	If the card provides write protection features, this command clears the write protection bit of the addressed group.
CMD30	adtc	[31:0] write protect data address	R1	SEND_WRITE_PROT	If the card provides write protection features, this command asks the card to send the status of the write protection bits.
CMD31	Reserved				

Table 205. Erase commands

CMD index	Type	Argument	Response format	Abbreviation	Description
CMD32 ... CMD34	Reserved. These command indexes cannot be used in order to maintain backward compatibility with older versions of the MultiMediaCard.				
CMD35	ac	[31:0] data address	R1	ERASE_GROUP_START	Sets the address of the first erase group within a range to be selected for erase.
CMD36	ac	[31:0] data address	R1	ERASE_GROUP_END	Sets the address of the last erase group within a continuous range to be selected for erase.
CMD37	Reserved. This command index cannot be used in order to maintain backward compatibility with older versions of the MultiMediaCards				
CMD38	ac	[31:0] stuff bits	R1	ERASE	Erases all previously selected write blocks.

Table 206. I/O mode commands

CMD index	Type	Argument	Response format	Abbreviation	Description
CMD39	ac	[31:16] RCA [15:15] register write flag [14:8] register address [7:0] register data	R4	FAST_IO	Used to write and read 8-bit (register) data fields. The command addresses a card and a register and provides the data for writing if the write flag is set. The R4 response contains data read from the addressed register. This command accesses application-dependent registers that are not defined in the MultiMediaCard standard.

Table 206. I/O mode commands (continued)

CMD index	Type	Argument	Response format	Abbreviation	Description
CMD40	bcr	[31:0] stuff bits	R5	GO_IRQ_STATE	Places the system in the interrupt mode.
CMD41	Reserved				

Table 207. Lock card

CMD index	Type	Argument	Response format	Abbreviation	Description
CMD42	adtc	[31:0] stuff bits	R1b	LOCK_UNLOCK	Sets/resets the password or locks/unlocks the card. The size of the data block is set by the SET_BLOCK_LEN command.
CMD43 ... CMD54	Reserved				

Table 208. Application-specific commands

CMD index	Type	Argument	Response format	Abbreviation	Description
CMD55	ac	[31:16] RCA [15:0] stuff bits	R1	APP_CMD	Indicates to the card that the next command bits is an application specific command rather than a standard command
CMD56	adtc	[31:1] stuff bits [0]: RD/WR	-	-	Used either to transfer a data block to the card or to get a data block from the card for general purpose/application-specific commands. The size of the data block shall be set by the SET_BLOCK_LEN command.
CMD57 ... CMD59	Reserved.				
CMD60 ... CMD63	Reserved for manufacturer.				

40.5 Response formats

All responses are sent via the SDMMC command line SDMMC_CMD. The response transmission always starts with the left bit of the bit string corresponding to the response code word. The code length depends on the response type.

A response always starts with a start bit (always 0), followed by the bit indicating the direction of transmission (card = 0). A value denoted by x in the tables below indicates a variable entry. All responses, except for the R3 response type, are protected by a CRC. Every command code word is terminated by the end bit (always 1).

There are five types of responses. Their formats are defined as follows:

40.5.1 R1 (normal response command)

Code length = 48 bits. The 45:40 bits indicate the index of the command to be responded to, this value being interpreted as a binary-coded number (between 0 and 63). The status of the card is coded in 32 bits.

Table 209. R1 response

Bit position	Width (bits	Value	Description
47	1	0	Start bit
46	1	0	Transmission bit
[45:40]	6	X	Command index
[39:8]	32	X	Card status
[7:1]	7	X	CRC7
0	1	1	End bit

40.5.2 R1b

It is identical to R1 with an optional busy signal transmitted on the data line. The card may become busy after receiving these commands based on its state prior to the command reception.

40.5.3 R2 (CID, CSD register)

Code length = 136 bits. The contents of the CID register are sent as a response to the CMD2 and CMD10 commands. The contents of the CSD register are sent as a response to CMD9. Only the bits [127...1] of the CID and CSD are transferred, the reserved bit [0] of these registers is replaced by the end bit of the response. The card indicates that an erase is in progress by holding SDMMC_D0 low. The actual erase time may be quite long, and the host may issue CMD7 to deselect the card.

Table 210. R2 response

Bit position	Width (bits	Value	Description
135	1	0	Start bit
134	1	0	Transmission bit
[133:128]	6	‘111111’	Command index
[127:1]	127	X	Card status
0	1	1	End bit

40.5.4 R3 (OCR register)

Code length: 48 bits. The contents of the OCR register are sent as a response to CMD1. The level coding is as follows: restricted voltage windows = low, card busy = low.

Table 211. R3 response

Bit position	Width (bits	Value	Description
47	1	0	Start bit
46	1	0	Transmission bit
[45:40]	6	‘111111’	Reserved
[39:8]	32	X	OCR register
[7:1]	7	‘1111111’	Reserved
0	1	1	End bit

40.5.5 R4 (Fast I/O)

Code length: 48 bits. The argument field contains the RCA of the addressed card, the register address to be read out or written to, and its content.

Table 212. R4 response

Bit position		Width (bits	Value	Description
47		1	0	Start bit
46		1	0	Transmission bit
[45:40]		6	‘100111’	CMD39
[39:8] Argument field	[31:16]	16	X	RCA
	[15:8]	8	X	register address
	[7:0]	8	X	read register contents
[7:1]		7	X	CRC7
0		1	1	End bit

40.5.6 R4b

For SD I/O only: an SDIO card receiving the CMD5 will respond with a unique SDIO response R4. The format is:

Table 213. R4b response

Bit position	Width (bits	Value	Description
47	1	0	Start bit
46	1	0	Transmission bit
[45:40]	6	X	Reserved

Table 213. R4b response (continued)

Bit position		Width (bits	Value	Description
[39:8] Argument field	39	16	X	Card is ready
	[38:36]	3	X	Number of I/O functions
	35	1	X	Present memory
	[34:32]	3	X	Stuff bits
	[31:8]	24	X	I/O ORC
[7:1]		7	X	Reserved
0		1	1	End bit

Once an SD I/O card has received a CMD5, the I/O portion of that card is enabled to respond normally to all further commands. This I/O enable of the function within the I/O card will remain set until a reset, power cycle or CMD52 with write to I/O reset is received by the card. Note that an SD memory-only card may respond to a CMD5. The proper response for a memory-only card would be *Present memory* = 1 and *Number of I/O functions* = 0. A memory-only card built to meet the SD Memory Card specification version 1.0 would detect the CMD5 as an illegal command and not respond. The I/O aware host will send CMD5. If the card responds with response R4, the host determines the card's configuration based on the data contained within the R4 response.

40.5.7 R5 (interrupt request)

Only for MultiMediaCard. Code length: 48 bits. If the response is generated by the host, the RCA field in the argument will be 0x0.

Table 214. R5 response

Bit position		Width (bits	Value	Description
47		1	0	Start bit
46		1	0	Transmission bit
[45:40]		6	'101000'	CMD40
[39:8] Argument field	[31:16]	16	X	RCA [31:16] of winning card or of the host
	[15:0]	16	X	Not defined. May be used for IRQ data
[7:1]		7	X	CRC7
0		1	1	End bit

40.5.8 R6

Only for SD I/O. The normal response to CMD3 by a memory device. It is shown in *Table 215*.

Table 215. R6 response

Bit position		Width (bits)	Value	Description
47		1	0	Start bit
46		1	0	Transmission bit
[45:40]		6	‘101000’	CMD40
[39:8] Argument field	[31:16]	16	X	RCA [31:16] of winning card or of the host
	[15:0]	16	X	Not defined. May be used for IRQ data
[7:1]		7	X	CRC7
0		1	1	End bit

The card [23:8] status bits are changed when CMD3 is sent to an I/O-only card. In this case, the 16 bits of response are the SD I/O-only values:

- Bit [15] COM_CRC_ERROR
- Bit [14] ILLEGAL_COMMAND
- Bit [13] ERROR
- Bits [12:0] Reserved

40.6 SDIO I/O card-specific operations

The following features are SD I/O-specific operations:

- SDIO read wait operation by SDMMC_D2 signalling
- SDIO read wait operation by stopping the clock
- SDIO suspend/resume operation (write and read suspend)
- SDIO interrupts

The SDMMC supports these operations only if the SDMMC_DCTRL[11] bit is set, except for read suspend that does not need specific hardware implementation.

40.6.1 SDIO I/O read wait operation by SDMMC_D2 signalling

It is possible to start the readwait interval before the first block is received: when the data path is enabled (SDMMC_DCTRL[0] bit set), the SDIO-specific operation is enabled (SDMMC_DCTRL[11] bit set), read wait starts (SDMMC_DCTRL[10] =0 and SDMMC_DCTRL[8] =1) and data direction is from card to SDMMC (SDMMC_DCTRL[1] = 1), the DPSM directly moves from Idle to Readwait. In Readwait the DPSM drives SDMMC_D2 to 0 after 2 SDMMC_CK clock cycles. In this state, when you set the RWSTOP bit (SDMMC_DCTRL[9]), the DPSM remains in Wait for two more SDMMC_CK clock cycles to drive SDMMC_D2 to 1 for one clock cycle (in accordance with SDIO specification). The DPSM then starts waiting again until it receives data from the card. The DPSM will not start a readwait interval while receiving a block even if read wait start is set: the readwait interval will start after the CRC is received. The RWSTOP bit has to be cleared to start a new read wait operation. During the readwait interval, the SDMMC can detect SDIO interrupts on SDMMC_D1.

40.6.2 SDIO read wait operation by stopping SDMMC_CK

If the SDIO card does not support the previous read wait method, the SDMMC can perform a read wait by stopping SDMMC_CK (SDMMC_DCTRL is set just like in the method presented in *Section 40.6.1*, but SDMMC_DCTRL[10] =1): DSPM stops the clock two SDMMC_CK cycles after the end bit of the current received block and starts the clock again after the read wait start bit is set.

As SDMMC_CK is stopped, any command can be issued to the card. During a read/wait interval, the SDMMC can detect SDIO interrupts on SDMMC_D1.

40.6.3 SDIO suspend/resume operation

While sending data to the card, the SDMMC can suspend the write operation. the SDMMC_CMD[11] bit is set and indicates to the CPSM that the current command is a suspend command. The CPSM analyzes the response and when the ACK is received from the card (suspend accepted), it acknowledges the DPSM that goes Idle after receiving the CRC token of the current block.

The hardware does not save the number of the remaining block to be sent to complete the suspended operation (resume).

The write operation can be suspended by software, just by disabling the DPSM (SDMMC_DCTRL[0] =0) when the ACK of the suspend command is received from the card. The DPSM enters then the Idle state.

To suspend a read: the DPSM waits in the Wait_r state as the function to be suspended sends a complete packet just before stopping the data transaction. The application continues reading RxFIFO until the FIF0 is empty, and the DPSM goes Idle automatically.

40.6.4 SDIO interrupts

SDIO interrupts are detected on the SDMMC_D1 line once the SDMMC_DCTRL[11] bit is set.

When SDIO interrupt is detected, SDMMC_STA[22] (SDIOIT) bit is set. This static bit can be cleared with clear bit SDMMC_ICR[22] (SDIOITC). An interrupt can be generated when SDIOIT status bit is set. Separated interrupt enable SDMMC_MASK[22] bit (SDIOITE) is available to enable and disable interrupt request.

When SD card interrupt occurs (SDMMC_STA[22] bit set), host software follows below steps to handle it.

1. Disable SDIOIT interrupt signaling by clearing SDIOITE bit (SDMMC_MASK[22] = ‘0’),
2. Serve card interrupt request, and clear the source of interrupt on the SD card,
3. Clear SDIOIT bit by writing ‘1’ to SDIOITC bit (SDMMC_ICR[22] = ‘1’),
4. Enable SDIOIT interrupt signaling by writing ‘1’ to SDIOITE bit (SDMMC_MASK[22] = ‘1’).

Steps 2 to 4 can be executed out of the SDIO interrupt service routine.

40.7 HW flow control

The HW flow control functionality is used to avoid FIFO underrun (TX mode) and overrun (RX mode) errors.

The behavior is to stop SDMMC_CK and freeze SDMMC state machines. The data transfer is stalled while the FIFO is unable to transmit or receive data. Only state machines clocked by SDMMCCLK are frozen, the APB2 interface is still alive. The FIFO can thus be filled or emptied even if flow control is activated.

To enable HW flow control, the SDMMC_CLKCR[14] register bit must be set to 1. After reset Flow Control is disabled.

40.8 SDMMC registers

The device communicates to the system via 32-bit-wide control registers accessible via APB2.

40.8.1 SDMMC power control register (SDMMC_POWER)

Address offset: 0x00

Reset value: 0x0000 0000

31	30	29	28	27	26	25	24	23	22	21	20	19	18	17	16
Res.	Res.	Res.	Res.	Res.	Res.	Res.	Res.	Res.	Res.	Res.	Res.	Res.	Res.	Res.	Res.

15	14	13	12	11	10	9	8	7	6	5	4	3	2	1	0
Res.	Res.	Res.	Res.	Res.	Res.	Res.	Res.	Res.	Res.	Res.	Res.	Res.	Res.	PWRCTRL	
														rw	rw

Bits 31:2 Reserved, must be kept at reset value.

[1:0] **PWRCTRL:** Power supply control bits.
These bits are used to define the current functional state of the card clock:
00: Power-off: the clock to card is stopped.
01: Reserved
10: Reserved power-up
11: Power-on: the card is clocked.

Note: At least seven PCLK2 clock periods are needed between two write accesses to this register.

Note: After a data write, data cannot be written to this register for three SDMMCCLK clock periods plus two PCLK2 clock periods.

40.8.2 SDMMC clock control register (SDMMC_CLKCR)

Address offset: 0x04

Reset value: 0x0000 0000

The SDMMC_CLKCR register controls the SDMMC_CK output clock.

31	30	29	28	27	26	25	24	23	22	21	20	19	18	17	16
Res.	Res.	Res.	Res.	Res.	Res.	Res.	Res.	Res.	Res.	Res.	Res.	Res.	Res.	Res.	Res.

15	14	13	12	11	10	9	8	7	6	5	4	3	2	1	0
Res.	HWFC_EN	NEGEDGE	WIDBUS		BYPASS	PWRSAV	CLKEN	CLKDIV							
	rw	rw	rw	rw	rw	rw	rw	rw	rw	rw	rw	rw	rw	rw	rw

Bits 31:15 Reserved, must be kept at reset value.

Bit 14 **HWFC_EN:** HW Flow Control enable

0b: HW Flow Control is disabled

1b: HW Flow Control is enabled

When HW Flow Control is enabled, the meaning of the TXFIFOE and RXFIFOF interrupt signals, please see SDMMC Status register definition in *Section 40.8.11*.

Bit 13 **NEGEDGE:** SDMMC_CK dephasing selection bit

0b: Command and Data changed on the SDMMCCLK falling edge succeeding the rising edge of SDMMC_CK. (SDMMC_CK rising edge occurs on SDMMCCLK rising edge).

1b: Command and Data changed on the SDMMC_CK falling edge.

When BYPASS is active, the data and the command change on SDMMCCLK falling edge whatever NEGEDGE value.

Bits 12:11 **WIDBUS:** Wide bus mode enable bit

00: Default bus mode: SDMMC_D0 used

01: 4-wide bus mode: SDMMC_D[3:0] used

10: 8-wide bus mode: SDMMC_D[7:0] used

Bit 10 **BYPASS:** Clock divider bypass enable bit

0: Disable bypass: SDMMCCLK is divided according to the CLKDIV value before driving the SDMMC_CK output signal.

1: Enable bypass: SDMMCCLK directly drives the SDMMC_CK output signal.

Bit 9 **PWRSAV:** Power saving configuration bit

For power saving, the SDMMC_CK clock output can be disabled when the bus is idle by setting PWRSAV:

0: SDMMC_CK clock is always enabled

1: SDMMC_CK is only enabled when the bus is active

Bit 8 **CLKEN:** Clock enable bit

0: SDMMC_CK is disabled

1: SDMMC_CK is enabled

Bits 7:0 **CLKDIV:** Clock divide factor

This field defines the divide factor between the input clock (SDMMCCLK) and the output clock (SDMMC_CK): SDMMC_CK frequency = SDMMCCLK / [CLKDIV + 2].

Note: 1 While the SD/SDIO card or MultiMediaCard is in identification mode, the SDMMC_CK frequency must be less than 400 kHz.

2 The clock frequency can be changed to the maximum card bus frequency when relative card addresses are assigned to all cards.

3 After a data write, data cannot be written to this register for three SDMMCCLK clock periods plus two PCLK2 clock periods. SDMMC_CK can also be stopped during the read wait interval for SD I/O cards: in this case the SDMMC_CLKCR register does not control SDMMC_CK.

40.8.3 SDMMC argument register (SDMMC_ARG)

Address offset: 0x08

Reset value: 0x0000 0000

The SDMMC_ARG register contains a 32-bit command argument, which is sent to a card as part of a command message.

31	30	29	28	27	26	25	24	23	22	21	20	19	18	17	16
CMDARG[31:16]															
rw	rw	rw	rw	rw	rw	rw	rw	rw	rw	rw	rw	rw	rw	rw	rw
15	14	13	12	11	10	9	8	7	6	5	4	3	2	1	0
CMDARG[15:0]															
rw	rw	rw	rw	rw	rw	rw	rw	rw	rw	rw	rw	rw	rw	rw	rw

Bits 31:0 **CMDARG:** Command argument

Command argument sent to a card as part of a command message. If a command contains an argument, it must be loaded into this register before writing a command to the command register.

40.8.4 SDMMC command register (SDMMC_CMD)

Address offset: 0x0C

Reset value: 0x0000 0000

The SDMMC_CMD register contains the command index and command type bits. The command index is sent to a card as part of a command message. The command type bits control the command path state machine (CPSM).

31	30	29	28	27	26	25	24	23	22	21	20	19	18	17	16
Res.	Res.	Res.	Res.	Res.	Res.	Res.	Res.	Res.	Res.	Res.	Res.	Res.	Res.	Res.	Res.
15	14	13	12	11	10	9	8	7	6	5	4	3	2	1	0
Res.	Res.	Res.	Res.	SDIO Suspend	CPSM EN	WAIT PEND	WAIT INT	WAITRESP		CMDINDEX					
				rw	rw	rw	rw	rw	rw	rw	rw	rw	rw	rw	rw

Bits 31:12 Reserved, must be kept at reset value.

Bit 11 **SDIOSuspend:** SD I/O suspend command

If this bit is set, the command to be sent is a suspend command (to be used only with SDIO card).

Bit 10 **CPSMEN:** Command path state machine (CPSM) Enable bit

If this bit is set, the CPSM is enabled.

Bit 9 **WAITPEND:** CPSM Waits for ends of data transfer (CmdPend internal signal).

If this bit is set, the CPSM waits for the end of data transfer before it starts sending a command. This feature is available only with Stream data transfer mode SDMMC_DCTRL[2] = 1.

Bit 8 **WAITINT:** CPSM waits for interrupt request
If this bit is set, the CPSM disables command timeout and waits for an interrupt request.

Bits 7:6 WAITRESP: Wait for response bits
They are used to configure whether the CPSM is to wait for a response, and if yes, which kind of response.
00: No response, expect CMDSENT flag
01: Short response, expect CMDREND or CCRCFAIL flag
10: No response, expect CMDSENT flag
11: Long response, expect CMDREND or CCRCFAIL flag

Bits 5:0 **CMDINDEX:** Command index
The command index is sent to the card as part of a command message.

Note: 1 After a data write, data cannot be written to this register for three SDMMCCLK clock periods plus two PCLK2 clock periods.

2 MultiMediaCards can send two kinds of response: short responses, 48 bits long, or long responses,136 bits long. SD card and SD I/O card can send only short responses, the argument can vary according to the type of response: the software will distinguish the type of response according to the sent command.

40.8.5 SDMMC command response register (SDMMC_RESPCMD)

Address offset: 0x10

Reset value: 0x0000 0000

The SDMMC_RESPCMD register contains the command index field of the last command response received. If the command response transmission does not contain the command index field (long or OCR response), the RESPCMD field is unknown, although it must contain 111111b (the value of the reserved field from the response).

31	30	29	28	27	26	25	24	23	22	21	20	19	18	17	16
Res.	Res.	Res.	Res.	Res.	Res.	Res.	Res.	Res.	Res.	Res.	Res.	Res.	Res.	Res.	Res.

15	14	13	12	11	10	9	8	7	6	5	4	3	2	1	0
Res.	Res.	Res.	Res.	Res.	Res.	Res.	Res.	Res.	Res.	RESPCMD					
										r	r	r	r	r	r

Bits 31:6 Reserved, must be kept at reset value.

Bits 5:0 **RESPCMD:** Response command index
Read-only bit field. Contains the command index of the last command response received.

40.8.6 SDMMC response 1..4 register (SDMMC_RESPx)

Address offset: (0x10 + (4 × x)); x = 1..4

Reset value: 0x0000 0000

The SDMMC_RESP1/2/3/4 registers contain the status of a card, which is part of the received response.

31	30	29	28	27	26	25	24	23	22	21	20	19	18	17	16
CARDSTATUSx[31:16]															
r	r	r	r	r	r	r	r	r	r	r	r	r	r	r	r
15	14	13	12	11	10	9	8	7	6	5	4	3	2	1	0
CARDSTATUSx[15:0]															
r	r	r	r	r	r	r	r	r	r	r	r	r	r	r	r

Bits 31:0 **CARDSTATUSx:** see *Table 216*.

The Card Status size is 32 or 127 bits, depending on the response type.

Table 216. Response type and SDMMC_RESPx registers

Register	Short response	Long response
SDMMC_RESP1	Card Status[31:0]	Card Status [127:96]
SDMMC_RESP2	Unused	Card Status [95:64]
SDMMC_RESP3	Unused	Card Status [63:32]
SDMMC_RESP4	Unused	Card Status [31:1]0b

The most significant bit of the card status is received first. The SDMMC_RESP4 register LSB is always 0b.

40.8.7 SDMMC data timer register (SDMMC_DTIMER)

Address offset: 0x24

Reset value: 0x0000 0000

The SDMMC_DTIMER register contains the data timeout period, in card bus clock periods.

A counter loads the value from the SDMMC_DTIMER register, and starts decrementing when the data path state machine (DPSM) enters the Wait_R or Busy state. If the timer reaches 0 while the DPSM is in either of these states, the timeout status flag is set.

31	30	29	28	27	26	25	24	23	22	21	20	19	18	17	16
DATATIME[31:16]															
rw	rw	rw	rw	rw	rw	rw	rw	rw	rw	rw	rw	rw	rw	rw	rw
15	14	13	12	11	10	9	8	7	6	5	4	3	2	1	0
DATATIME[15:0]															
rw	rw	rw	rw	rw	rw	rw	rw	rw	rw	rw	rw	rw	rw	rw	rw

Bits 31:0 **DATATIME:** Data timeout period

Data timeout period expressed in card bus clock periods.

Note: A data transfer must be written to the data timer register and the data length register before being written to the data control register.

40.8.8 SDMMC data length register (SDMMC_DLEN)

Address offset: 0x28

Reset value: 0x0000 0000

The SDMMC_DLEN register contains the number of data bytes to be transferred. The value is loaded into the data counter when data transfer starts.

31	30	29	28	27	26	25	24	23	22	21	20	19	18	17	16
Res.	Res.	Res.	Res.	Res.	Res.	Res.	DATALENGTH[24:16]								
							rw	rw	rw	rw	rw	rw	rw	rw	rw
15	14	13	12	11	10	9	8	7	6	5	4	3	2	1	0
DATALENGTH[15:0]															
rw	rw	rw	rw	rw	rw	rw	rw	rw	rw	rw	rw	rw	rw	rw	rw

Bits 31:25 Reserved, must be kept at reset value.

Bits 24:0 **DATALENGTH:** Data length value
Number of data bytes to be transferred.

Note: For a block data transfer, the value in the data length register must be a multiple of the block size (see SDMMC_DCTRL). A data transfer must be written to the data timer register and the data length register before being written to the data control register.

For an SDMMC multibyte transfer the value in the data length register must be between 1 and 512.

40.8.9 SDMMC data control register (SDMMC_DCTRL)

Address offset: 0x2C

Reset value: 0x0000 0000

The SDMMC_DCTRL register control the data path state machine (DPSM).

31	30	29	28	27	26	25	24	23	22	21	20	19	18	17	16
Res.	Res.	Res.	Res.	Res.	Res.	Res.	Res.	Res.	Res.	Res.	Res.	Res.	Res.	Res.	Res.
15	14	13	12	11	10	9	8	7	6	5	4	3	2	1	0
Res.	Res.	Res.	Res.	SDIO EN	RW MOD	RW STOP	RW START	DBLOCKSIZE				DMA EN	DT MODE	DTDIR	DTEN
				rw	rw	rw	rw	rw	rw	rw	rw	rw	rw	rw	rw

Bits 31:12 Reserved, must be kept at reset value.

Bit 11 **SDIOEN:** SD I/O enable functions
If this bit is set, the DPSM performs an SD I/O-card-specific operation.

Bit 10 **RWMOD:** Read wait mode
0: Read Wait control stopping SDMMC_D2
1: Read Wait control using SDMMC_CK

Bit 9 **RWSTOP:** Read wait stop

0: Read wait in progress if RWSTART bit is set
1: Enable for read wait stop if RWSTART bit is set

Bit 8 **RWSTART:** Read wait start

If this bit is set, read wait operation starts.

Bits 7:4 **DBLOCKSIZE:** Data block size

Define the data block length when the block data transfer mode is selected:

0000: (0 decimal) lock length = 2^0 = 1 byte
0001: (1 decimal) lock length = 2^1 = 2 bytes
0010: (2 decimal) lock length = 2^2 = 4 bytes
0011: (3 decimal) lock length = 2^3 = 8 bytes
0100: (4 decimal) lock length = 2^4 = 16 bytes
0101: (5 decimal) lock length = 2^5 = 32 bytes
0110: (6 decimal) lock length = 2^6 = 64 bytes
0111: (7 decimal) lock length = 2^7 = 128 bytes
1000: (8 decimal) lock length = 2^8 = 256 bytes
1001: (9 decimal) lock length = 2^9 = 512 bytes
1010: (10 decimal) lock length = 2^{10} = 1024 bytes
1011: (11 decimal) lock length = 2^{11} = 2048 bytes
1100: (12 decimal) lock length = 2^{12} = 4096 bytes
1101: (13 decimal) lock length = 2^{13} = 8192 bytes
1110: (14 decimal) lock length = 2^{14} = 16384 bytes
1111: (15 decimal) reserved

Bit 3 **DMAEN:** DMA enable bit

0: DMA disabled.
1: DMA enabled.

Bit 2 **DTMODE:** Data transfer mode selection 1: Stream or SDIO multibyte data transfer.

0: Block data transfer
1: Stream or SDIO multibyte data transfer

Bit 1 **DTDIR:** Data transfer direction selection

0: From controller to card.
1: From card to controller.

[0] **DTEN:** Data transfer enabled bit

Data transfer starts if 1b is written to the DTEN bit. Depending on the direction bit, DTDIR, the DPSM moves to the Wait_S, Wait_R state or Readwait if RW Start is set immediately at the beginning of the transfer. It is not necessary to clear the enable bit after the end of a data transfer but the SDMMC_DCTRL must be updated to enable a new data transfer

Note: After a data write, data cannot be written to this register for three SDMMCCLK (48 MHz) clock periods plus two PCLK2 clock periods.

The meaning of the DTMODE bit changes according to the value of the SDIOEN bit. When SDIOEN=0 and DTMODE=1, the MultiMediaCard stream mode is enabled, and when SDIOEN=1 and DTMODE=1, the peripheral enables an SDIO multibyte transfer.

40.8.10 SDMMC data counter register (SDMMC_DCOUNT)

Address offset: 0x30

Reset value: 0x0000 0000

The SDMMC_DCOUNT register loads the value from the data length register (see SDMMC_DLEN) when the DPSM moves from the Idle state to the Wait_R or Wait_S state. As data is transferred, the counter decrements the value until it reaches 0. The DPSM then moves to the Idle state and the data status end flag, DATAEND, is set.

31	30	29	28	27	26	25	24	23	22	21	20	19	18	17	16
Res.	Res.	Res.	Res.	Res.	Res.	Res.	DATACOUNT[24:16]								
							r	r	r	r	r	r	r	r	r

15	14	13	12	11	10	9	8	7	6	5	4	3	2	1	0
DATACOUNT[15:0]															
r	r	r	r	r	r	r	r	r	r	r	r	r	r	r	r

Bits 31:25 Reserved, must be kept at reset value.

Bits 24:0 **DATACOUNT:** Data count value
When this bit is read, the number of remaining data bytes to be transferred is returned. Write has no effect.

Note: This register should be read only when the data transfer is complete.

40.8.11 SDMMC status register (SDMMC_STA)

Address offset: 0x34

Reset value: 0x0000 0000

The SDMMC_STA register is a read-only register. It contains two types of flag:

- Static flags (bits [23:22,10:0]): these bits remain asserted until they are cleared by writing to the SDMMC Interrupt Clear register (see SDMMC_ICR)
- Dynamic flags (bits [21:11]): these bits change state depending on the state of the underlying logic (for example, FIFO full and empty flags are asserted and deasserted as data while written to the FIFO)

31	30	29	28	27	26	25	24	23	22	21	20	19	18	17	16
Res.	Res.	Res.	Res.	Res.	Res.	Res.	Res.	Res.	SDIOIT	RXD AVL	TXD AVL	RX FIFOE	TX FIFOE	RX FIFOF	TX FIFOF
									r	r	r	r	r	r	r

15	14	13	12	11	10	9	8	7	6	5	4	3	2	1	0
RX FIFO HF	TX FIFO HE	RXACT	TXACT	CMD ACT	DBCK END	Res.	DATA END	CMDS ENT	CMDR END	RX OVERR	TXUND ERR	DTIME OUT	CTIME OUT	DCRC FAIL	CCRC FAIL
r	r	r	r	r	r		r	r	r	r	r	r	r	r	r

Bits 31:23 Reserved, must be kept at reset value.

Bit 22 **SDIOIT:** SDIO interrupt received

Bit 21 **RXDAVL:** Data available in receive FIFO

Bit 20 **TXDAVL:** Data available in transmit FIFO

Bit 19 **RXFIFOE:** Receive FIFO empty

Bit 18 **TXFIFOE:** Transmit FIFO empty

When HW Flow Control is enabled, TXFIFOE signals becomes activated when the FIFO contains 2 words.

Bit 17 **RXFIFOF:** Receive FIFO full

When HW Flow Control is enabled, RXFIFOF signals becomes activated 2 words before the FIFO is full.

Bit 16 **TXFIFOF:** Transmit FIFO full

Bit 15 **RXFIFOHF:** Receive FIFO half full: there are at least 8 words in the FIFO

Bit 14 **TXFIFOHE:** Transmit FIFO half empty: at least 8 words can be written into the FIFO

Bit 13 **RXACT:** Data receive in progress

Bit 12 **TXACT:** Data transmit in progress

Bit 11 **CMDACT:** Command transfer in progress

Bit 10 **DBCKEND:** Data block sent/received (CRC check passed)

Bit 9 Reserved, must be kept at reset value.

Bit 8 **DATAEND:** Data end (data counter, SDIDCOUNT, is zero)

Bit 7 **CMDSENT:** Command sent (no response required)

Bit 6 **CMDREND:** Command response received (CRC check passed)

Bit 5 **RXOVERR:** Received FIFO overrun error

Note: If DMA is used to read SDMMC FIFO (DMAEN bit is set in SDMMC_DCTRL register), user software should disable DMA stream, and then write with '0' (to disable DMA request generation).

Bit 4 **TXUNDERR:** Transmit FIFO underrun error

Note: If DMA is used to fill SDMMC FIFO (DMAEN bit is set in SDMMC_DCTRL register), user software should disable DMA stream, and then write DMAEN with '0' (to disable DMA request generation).

Bit 3 **DTIMEOUT:** Data timeout

Bit 2 **CTIMEOUT:** Command response timeout

The Command TimeOut period has a fixed value of 64 SDMMC_CK clock periods.

Bit 1 **DCRCFAIL:** Data block sent/received (CRC check failed)

Bit 0 **CCRCFAIL:** Command response received (CRC check failed)

40.8.12 SDMMC interrupt clear register (SDMMC_ICR)

Address offset: 0x38

Reset value: 0x0000 0000

The SDMMC_ICR register is a write-only register. Writing a bit with 1b clears the corresponding bit in the SDMMC_STA Status register.

31	30	29	28	27	26	25	24	23	22	21	20	19	18	17	16
Res.	Res.	Res.	Res.	Res.	Res.	Res.	Res.	Res.	SDIO ITC	Res.	Res.	Res.	Res.	Res.	Res.
									rw						
15	14	13	12	11	10	9	8	7	6	5	4	3	2	1	0
Res.	Res.	Res.	Res.	Res.	DBCK ENDC	Res.	DATA ENDC	CMD SENTC	CMD REND C	RX OVERR C	TX UNDERR C	DTIME OUTC	CTIME OUTC	DCRC FAILC	CCRC FAILC
					rw		rw	rw	rw	rw	rw	rw	rw	rw	rw

Bits 31:23 Reserved, must be kept at reset value.

Bit 22 **SDIOITC:** SDIOIT flag clear bit
Set by software to clear the SDIOIT flag.
0: SDIOIT not cleared
1: SDIOIT cleared

Bits 21:11 Reserved, must be kept at reset value.

Bit 10 **DBCKENDC:** DBCKEND flag clear bit
Set by software to clear the DBCKEND flag.
0: DBCKEND not cleared
1: DBCKEND cleared

Bit 9 Reserved, must be kept at reset value.

Bit 8 **DATAENDC:** DATAEND flag clear bit
Set by software to clear the DATAEND flag.
0: DATAEND not cleared
1: DATAEND cleared

Bit 7 **CMDSENTC:** CMDSENT flag clear bit
Set by software to clear the CMDSENT flag.
0: CMDSENT not cleared
1: CMDSENT cleared

Bit 6 **CMDRENDC:** CMDREND flag clear bit
Set by software to clear the CMDREND flag.
0: CMDREND not cleared
1: CMDREND cleared

Bit 5 **RXOVERRC:** RXOVERR flag clear bit
Set by software to clear the RXOVERR flag.
0: RXOVERR not cleared
1: RXOVERR cleared

Bit 4 **TXUNDERRC:** TXUNDERR flag clear bit
Set by software to clear TXUNDERR flag.
0: TXUNDERR not cleared
1: TXUNDERR cleared

Bit 3 **DTIMEOUTC:** DTIMEOUT flag clear bit
Set by software to clear the DTIMEOUT flag.
0: DTIMEOUT not cleared
1: DTIMEOUT cleared

Bit 2 **CTIMEOUTC:** CTIMEOUT flag clear bit
Set by software to clear the CTIMEOUT flag.
0: CTIMEOUT not cleared
1: CTIMEOUT cleared

Bit 1 **DCRCFAILC:** DCRCFAIL flag clear bit
Set by software to clear the DCRCFAIL flag.
0: DCRCFAIL not cleared
1: DCRCFAIL cleared

Bit 0 **CCRCFAILC:** CCRCFAIL flag clear bit
Set by software to clear the CCRCFAIL flag.
0: CCRCFAIL not cleared
1: CCRCFAIL cleared

40.8.13 SDMMC mask register (SDMMC_MASK)

Address offset: 0x3C

Reset value: 0x0000 0000

The interrupt mask register determines which status flags generate an interrupt request by setting the corresponding bit to 1b.

31	30	29	28	27	26	25	24	23	22	21	20	19	18	17	16
Res.	Res.	Res.	Res.	Res.	Res.	Res.	Res.	Res.	SDIO ITIE	RXD AVLIE	TXD AVLIE	RX FIFO EIE	TX FIFO EIE	RX FIFO FIE	TX FIFO FIE
									rw	rw	rw	rw	rw	rw	rw

15	14	13	12	11	10	9	8	7	6	5	4	3	2	1	0
RX FIFO HFIE	TX FIFO HEIE	RX ACTIE	TX ACTIE	CMD ACTIE	DBCK ENDIE	Res.	DATA ENDIE	CMD SENT IE	CMD REND IE	RX OVERR IE	TX UNDERR IE	DTIME OUTIE	CTIME OUTIE	DCRC FAILIE	CCRC FAILIE
rw	rw	rw	rw	rw	rw		rw	rw	rw	rw	rw	rw	rw	rw	rw

Bits 31:23 Reserved, must be kept at reset value.

Bit 22 **SDIOITIE:** SDIO mode interrupt received interrupt enable
Set and cleared by software to enable/disable the interrupt generated when receiving the SDIO mode interrupt.
0: SDIO Mode Interrupt Received interrupt disabled
1: SDIO Mode Interrupt Received interrupt enabled

Bit 21 **RXDAVLIE:** Data available in Rx FIFO interrupt enable
Set and cleared by software to enable/disable the interrupt generated by the presence of data available in Rx FIFO.
0: Data available in Rx FIFO interrupt disabled
1: Data available in Rx FIFO interrupt enabled

Bit 20 **TXDAVLIE:** Data available in Tx FIFO interrupt enable
Set and cleared by software to enable/disable the interrupt generated by the presence of data available in Tx FIFO.
0: Data available in Tx FIFO interrupt disabled
1: Data available in Tx FIFO interrupt enabled

Bit 19 **RXFIFOEIE:** Rx FIFO empty interrupt enable
Set and cleared by software to enable/disable interrupt caused by Rx FIFO empty.
0: Rx FIFO empty interrupt disabled
1: Rx FIFO empty interrupt enabled

Bit 18 **TXFIFOEIE:** Tx FIFO empty interrupt enable
Set and cleared by software to enable/disable interrupt caused by Tx FIFO empty.
0: Tx FIFO empty interrupt disabled
1: Tx FIFO empty interrupt enabled

Bit 17 **RXFIFOFIE:** Rx FIFO full interrupt enable
Set and cleared by software to enable/disable interrupt caused by Rx FIFO full.
0: Rx FIFO full interrupt disabled
1: Rx FIFO full interrupt enabled

Bit 16 **TXFIFOFIE:** Tx FIFO full interrupt enable
Set and cleared by software to enable/disable interrupt caused by Tx FIFO full.
0: Tx FIFO full interrupt disabled
1: Tx FIFO full interrupt enabled

Bit 15 **RXFIFOHFIE:** Rx FIFO half full interrupt enable
Set and cleared by software to enable/disable interrupt caused by Rx FIFO half full.
0: Rx FIFO half full interrupt disabled
1: Rx FIFO half full interrupt enabled

Bit 14 **TXFIFOHEIE:** Tx FIFO half empty interrupt enable
Set and cleared by software to enable/disable interrupt caused by Tx FIFO half empty.
0: Tx FIFO half empty interrupt disabled
1: Tx FIFO half empty interrupt enabled

Bit 13 **RXACTIE:** Data receive acting interrupt enable
Set and cleared by software to enable/disable interrupt caused by data being received (data receive acting).
0: Data receive acting interrupt disabled
1: Data receive acting interrupt enabled

Bit 12 **TXACTIE:** Data transmit acting interrupt enable
Set and cleared by software to enable/disable interrupt caused by data being transferred (data transmit acting).
0: Data transmit acting interrupt disabled
1: Data transmit acting interrupt enabled

Bit 11 **CMDACTIE:** Command acting interrupt enable
Set and cleared by software to enable/disable interrupt caused by a command being transferred (command acting).
0: Command acting interrupt disabled
1: Command acting interrupt enabled

Bit 10 **DBCKENDIE:** Data block end interrupt enable
Set and cleared by software to enable/disable interrupt caused by data block end.
0: Data block end interrupt disabled
1: Data block end interrupt enabled

Bit 9 Reserved, must be kept at reset value.

Bit 8 **DATAENDIE:** Data end interrupt enable
Set and cleared by software to enable/disable interrupt caused by data end.
0: Data end interrupt disabled
1: Data end interrupt enabled

Bit 7 **CMDSENTIE:** Command sent interrupt enable
Set and cleared by software to enable/disable interrupt caused by sending command.
0: Command sent interrupt disabled
1: Command sent interrupt enabled

Bit 6 **CMDRENDIE:** Command response received interrupt enable
Set and cleared by software to enable/disable interrupt caused by receiving command response.
0: Command response received interrupt disabled
1: command Response Received interrupt enabled

Bit 5 **RXOVERRIE:** Rx FIFO overrun error interrupt enable
Set and cleared by software to enable/disable interrupt caused by Rx FIFO overrun error.
0: Rx FIFO overrun error interrupt disabled
1: Rx FIFO overrun error interrupt enabled

Bit 4 **TXUNDERRIE:** Tx FIFO underrun error interrupt enable
Set and cleared by software to enable/disable interrupt caused by Tx FIFO underrun error.
0: Tx FIFO underrun error interrupt disabled
1: Tx FIFO underrun error interrupt enabled

Bit 3 **DTIMEOUTIE:** Data timeout interrupt enable
Set and cleared by software to enable/disable interrupt caused by data timeout.
0: Data timeout interrupt disabled
1: Data timeout interrupt enabled

Bit 2 **CTIMEOUTIE:** Command timeout interrupt enable
Set and cleared by software to enable/disable interrupt caused by command timeout.
0: Command timeout interrupt disabled
1: Command timeout interrupt enabled

Bit 1 **DCRCFAILIE:** Data CRC fail interrupt enable
Set and cleared by software to enable/disable interrupt caused by data CRC failure.
0: Data CRC fail interrupt disabled
1: Data CRC fail interrupt enabled

Bit 0 **CCRCFAILIE:** Command CRC fail interrupt enable
Set and cleared by software to enable/disable interrupt caused by command CRC failure.
0: Command CRC fail interrupt disabled
1: Command CRC fail interrupt enabled

40.8.14 SDMMC FIFO counter register (SDMMC_FIFOCNT)

Address offset: 0x48

Reset value: 0x0000 0000

The SDMMC_FIFOCNT register contains the remaining number of words to be written to or read from the FIFO. The FIFO counter loads the value from the data length register (see SDMMC_DLEN) when the data transfer enable bit, DTEN, is set in the data control register (SDMMC_DCTRL register) and the DPSM is at the Idle state. If the data length is not word-aligned (multiple of 4), the remaining 1 to 3 bytes are regarded as a word.

31	30	29	28	27	26	25	24	23	22	21	20	19	18	17	16
Res.	Res.	Res.	Res.	Res.	Res.	Res.	Res.	FIFOCOUNT[23:16]							
								r	r	r	r	r	r	r	r
15	14	13	12	11	10	9	8	7	6	5	4	3	2	1	0
FIFOCOUNT[15:0]															
r	r	r	r	r	r	r	r	r	r	r	r	r	r	r	r

Bits 31:24 Reserved, must be kept at reset value.

Bits 23:0 **FIFOCOUNT:** Remaining number of words to be written to or read from the FIFO.

40.8.15 SDMMC data FIFO register (SDMMC_FIFO)

Address offset: 0x80

Reset value: 0x0000 0000

The receive and transmit FIFOs can be read or written as 32-bit wide registers. The FIFOs contain 32 entries on 32 sequential addresses. This allows the CPU to use its load and store multiple operands to read from/write to the FIFO.

31	30	29	28	27	26	25	24	23	22	21	20	19	18	17	16
FIF0Data[31:16]															
rw	rw	rw	rw	rw	rw	rw	rw	rw	rw	rw	rw	rw	rw	rw	rw
15	14	13	12	11	10	9	8	7	6	5	4	3	2	1	0
FIF0Data[15:0]															
rw	rw	rw	rw	rw	rw	rw	rw	rw	rw	rw	rw	rw	rw	rw	rw

bits 31:0 **FIFOData:** Receive and transmit FIFO data

The FIFO data occupies 32 entries of 32-bit words, from address:
SDMMC base + 0x080 to SDMMC base + 0xFC.

40.8.16 SDMMC register map

The following table summarizes the SDMMC registers.

Table 217. SDMMC register map

Offset	Register	31	30	29	28	27	26	25	24	23	22	21	20	19	18	17	16	15	14	13	12	11	10	9	8	7	6	5	4	3	2	1	0
0x00	**SDMMC_ POWER**	Res.	Res.	Res.	Res.	Res.	Res.	Res.	Res.	Res.	Res.	Res.	Res.	Res.	Res.	Res.	Res.	Res.	Res.	Res.	Res.	Res.	Res.	Res.	Res.	Res.	Res.	Res.	Res.	Res.	Res.	PWRCTRL	
	Reset value																															0	0
0x04	**SDMMC_ CLKCR**	Res.	Res.	Res.	Res.	Res.	Res.	Res.	Res.	Res.	Res.	Res.	Res.	Res.	Res.	Res.	Res.	Res.	HWFC_EN	NEGEDGE	WIDBUS		BYPASS	PWRSAV	CLKEN	CLKDIV							
	Reset value																		0	0	0	0	0	0	0	0	0	0	0	0	0	0	0
0x08	**SDMMC_ARG**	CMDARG																															
	Reset value	0	0	0	0	0	0	0	0	0	0	0	0	0	0	0	0	0	0	0	0	0	0	0	0	0	0	0	0	0	0	0	0
0x0C	**SDMMC_CMD**	Res.	Res.	Res.	Res.	Res.	Res.	Res.	Res.	Res.	Res.	Res.	Res.	Res.	Res.	Res.	Res.	Res.	Res.	Res.	Res.	SDIOSuspend	CPSMEN	WAITPEND	WAITINT	WAITRESP		CMDINDEX					
	Reset value																					0	0	0	0	0	0	0	0	0	0	0	0
0x10	**SDMMC_ RESPCMD**	Res.	Res.	Res.	Res.	Res.	Res.	Res.	Res.	Res.	Res.	Res.	Res.	Res.	Res.	Res.	Res.	Res.	Res.	Res.	Res.	Res.	Res.	Res.	Res.	Res.	Res.	RESPCMD					
	Reset value																											0	0	0	0	0	0
0x14	**SDMMC_ RESP1**	CARDSTATUS1																															
	Reset value	0	0	0	0	0	0	0	0	0	0	0	0	0	0	0	0	0	0	0	0	0	0	0	0	0	0	0	0	0	0	0	0
0x18	**SDMMC_ RESP2**	CARDSTATUS2																															
	Reset value	0	0	0	0	0	0	0	0	0	0	0	0	0	0	0	0	0	0	0	0	0	0	0	0	0	0	0	0	0	0	0	0
0x1C	**SDMMC_ RESP3**	CARDSTATUS3																															
	Reset value	0	0	0	0	0	0	0	0	0	0	0	0	0	0	0	0	0	0	0	0	0	0	0	0	0	0	0	0	0	0	0	0
0x20	**SDMMC_ RESP4**	CARDSTATUS4																															
	Reset value	0	0	0	0	0	0	0	0	0	0	0	0	0	0	0	0	0	0	0	0	0	0	0	0	0	0	0	0	0	0	0	0
0x24	**SDMMC_ DTIMER**	DATATIME																															
	Reset value	0	0	0	0	0	0	0	0	0	0	0	0	0	0	0	0	0	0	0	0	0	0	0	0	0	0	0	0	0	0	0	0
0x28	**SDMMC_ DLEN**	Res.	Res.	Res.	Res.	Res.	Res.	Res.	DATALENGTH																								
	Reset value								0	0	0	0	0	0	0	0	0	0	0	0	0	0	0	0	0	0	0	0	0	0	0	0	0
0x2C	**SDMMC_ DCTRL**	Res.	Res.	Res.	Res.	Res.	Res.	Res.	Res.	Res.	Res.	Res.	Res.	Res.	Res.	Res.	Res.	Res.	Res.	Res.	Res.	SDIOEN	RWMOD	RWSTOP	RWSTART	DBLOCKSIZE			DMAEN	DTMODE	DTDIR	DTEN	
	Reset value																					0	0	0	0	0	0	0	0	0	0	0	0
0x30	**SDMMC_ DCOUNT**	Res.	Res.	Res.	Res.	Res.	Res.	Res.	DATACOUNT																								
	Reset value								0	0	0	0	0	0	0	0	0	0	0	0	0	0	0	0	0	0	0	0	0	0	0	0	0

Table 217. SDMMC register map (continued)

Offset	Register	31	30	29	28	27	26	25	24	23	22	21	20	19	18	17	16	15	14	13	12	11	10	9	8	7	6	5	4	3	2	1	0
0x34	**SDMMC_STA**	Res.	Res.	Res.	Res.	Res.	Res.	Res.	Res.	Res.	SDIOIT	RXDAVL	TXDAVL	RXFIFOE	TXFIFOE	RXFIFOF	TXFIFOF	RXFIFOHF	TXFIFOHE	RXACT	TXACT	CMDACT	DBCKEND	Res.	DATAEND	CMDSENT	CMDREND	RXOVERR	TXUNDERR	DTIMEOUT	CTIMEOUT	DCRCFAIL	CCRCFAIL
	Reset value										0	0	0	0	0	0	0	0	0	0	0	0	0		0	0	0	0	0	0	0	0	0
0x38	**SDMMC_ICR**	Res.	Res.	Res.	Res.	Res.	Res.	Res.	Res.	Res.	SDIOITC	Res.	Res.	Res.	Res.	Res.	Res.	Res.	Res.	Res.	Res.	Res.	DBCKENDC	Res.	DATAENDC	CMDSENTC	CMDRENDC	RXOVERRC	TXUNDERRC	DTIMEOUTC	CTIMEOUTC	DCRCFAILC	CCRCFAILC
	Reset value										0												0		0	0	0	0	0	0	0	0	0
0x3C	**SDMMC_ MASK**	Res.	Res.	Res.	Res.	Res.	Res.	Res.	Res.	Res.	SDIOITIE	RXDAVLIE	TXDAVLIE	RXFIFOEIE	TXFIFOEIE	RXFIFOFIE	TXFIFOFIE	RXFIFOHFIE	TXFIFOHEIE	RXACTIE	TXACTIE	CMDACTIE	DBCKENDIE	Res.	DATAENDIE	CMDSENTIE	CMDRENDIE	RXOVERRIE	TXUNDERRIE	DTIMEOUTIE	CTIMEOUTIE	DCRCFAILIE	CCRCFAILIE
	Reset value										0	0	0	0	0	0	0	0	0	0	0	0	0		0	0	0	0	0	0	0	0	0
0x48	**SDMMC_ FIFOCNT**	Res.	Res.	Res.	Res.	Res.	Res.	Res.	Res.	FIFOCOUNT																							
	Reset value									0	0	0	0	0	0	0	0	0	0	0	0	0	0	0	0	0	0	0	0	0	0	0	0
0x80	**SDMMC_FIFO**	FIF0Data																															
	Reset value	0	0	0	0	0	0	0	0	0	0	0	0	0	0	0	0	0	0	0	0	0	0	0	0	0	0	0	0	0	0	0	0

Refer to *Section 2.2.2: Memory map and register boundary addresses* for the register boundary addresses.

41 Controller area network (bxCAN)

41.1 Introduction

The **Basic Extended CAN** peripheral, named **bxCAN**, interfaces the CAN network. It supports the CAN protocols version 2.0A and B. It has been designed to manage a high number of incoming messages efficiently with a minimum CPU load. It also meets the priority requirements for transmit messages.

For safety-critical applications, the CAN controller provides all hardware functions for supporting the CAN Time Triggered Communication option.

41.2 bxCAN main features

- Supports CAN protocol version 2.0 A, B Active
- Bit rates up to 1 Mbit/s
- Supports the Time Triggered Communication option

Transmission

- Three transmit mailboxes
- Configurable transmit priority
- Time Stamp on SOF transmission

Reception

- Two receive FIFOs with three stages
- Scalable filter banks:
  - 14 filter banks
- Identifier list feature
- Configurable FIFO overrun
- Time Stamp on SOF reception

Time-triggered communication option

- Disable automatic retransmission mode
- 16-bit free running timer
- Time Stamp sent in last two data bytes

Management

- Maskable interrupts
- Software-efficient mailbox mapping at a unique address space

41.3 bxCAN general description

In today's CAN applications, the number of nodes in a network is increasing and often several networks are linked together via gateways. Typically the number of messages in the system (and thus to be handled by each node) has significantly increased. In addition to the application messages, Network Management and Diagnostic messages have been introduced.

- An enhanced filtering mechanism is required to handle each type of message.

Furthermore, application tasks require more CPU time, therefore real-time constraints caused by message reception have to be reduced.

- A receive FIFO scheme allows the CPU to be dedicated to application tasks for a long time period without losing messages.

The standard HLP (Higher Layer Protocol) based on standard CAN drivers requires an efficient interface to the CAN controller.

Figure 451. CAN network topology

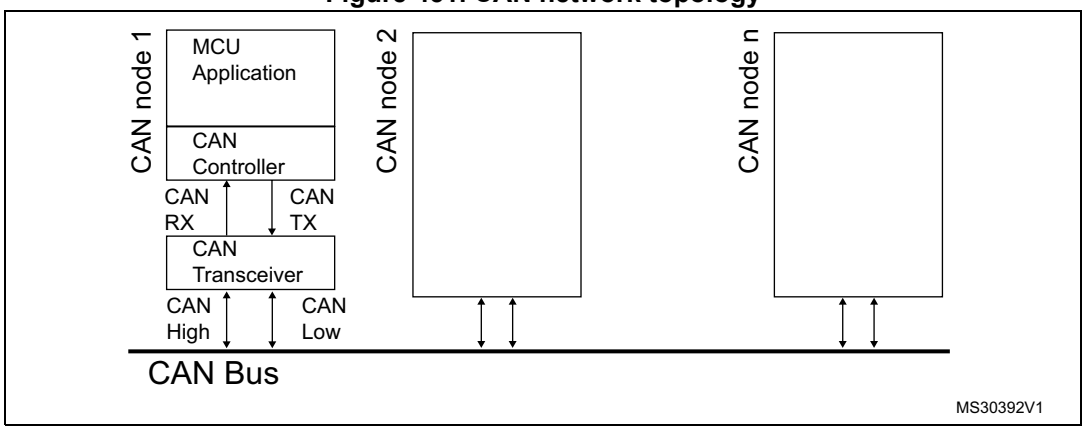

41.3.1 CAN 2.0B active core

The bxCAN module handles the transmission and the reception of CAN messages fully autonomously. Standard identifiers (11-bit) and extended identifiers (29-bit) are fully supported by hardware.

41.3.2 Control, status and configuration registers

The application uses these registers to:

- Configure CAN parameters, e.g. baud rate
- Request transmissions
- Handle receptions
- Manage interrupts
- Get diagnostic information

41.3.3 Tx mailboxes

Three transmit mailboxes are provided to the software for setting up messages. The transmission Scheduler decides which mailbox has to be transmitted first.

41.3.4 Acceptance filters

The bxCAN provides 14 scalable/configurable identifier filter banks for selecting the incoming messages the software needs and discarding the others.

Receive FIFO

Two receive FIFOs are used by hardware to store the incoming messages. Three complete messages can be stored in each FIFO. The FIFOs are managed completely by hardware.

41.4 bxCAN operating modes

bxCAN has three main operating modes: **initialization**, **normal** and **Sleep**. After a hardware reset, bxCAN is in Sleep mode to reduce power consumption and an internal pull-up is active on CANTX. The software requests bxCAN to enter **initialization** or **Sleep** mode by setting the INRQ or SLEEP bits in the CAN_MCR register. Once the mode has been entered, bxCAN confirms it by setting the INAK or SLAK bits in the CAN_MSR register and the internal pull-up is disabled. When neither INAK nor SLAK are set, bxCAN is in **normal** mode. Before entering **normal** mode bxCAN always has to **synchronize** on the CAN bus. To synchronize, bxCAN waits until the CAN bus is idle, this means 11 consecutive recessive bits have been monitored on CANRX.

41.4.1 Initialization mode

The software initialization can be done while the hardware is in Initialization mode. To enter this mode the software sets the INRQ bit in the CAN_MCR register and waits until the hardware has confirmed the request by setting the INAK bit in the CAN_MSR register.

To leave Initialization mode, the software clears the INQR bit. bxCAN has left Initialization mode once the INAK bit has been cleared by hardware.

While in Initialization Mode, all message transfers to and from the CAN bus are stopped and the status of the CAN bus output CANTX is recessive (high).

Entering Initialization Mode does not change any of the configuration registers.

To initialize the CAN Controller, software has to set up the Bit Timing (CAN_BTR) and CAN options (CAN_MCR) registers.

To initialize the registers associated with the CAN filter banks (mode, scale, FIFO assignment, activation and filter values), software has to set the FINIT bit (CAN_FMR). Filter initialization also can be done outside the initialization mode.

Note: When FINIT=1, CAN reception is deactivated.

The filter values also can be modified by deactivating the associated filter activation bits (in the CAN_FA1R register).

If a filter bank is not used, it is recommended to leave it non active (leave the corresponding FACT bit cleared).

41.4.2 Normal mode

Once the initialization is complete, the software must request the hardware to enter Normal mode to be able to synchronize on the CAN bus and start reception and transmission.

The request to enter Normal mode is issued by clearing the INRQ bit in the CAN_MCR register. The bxCAN enters Normal mode and is ready to take part in bus activities when it has synchronized with the data transfer on the CAN bus. This is done by waiting for the occurrence of a sequence of 11 consecutive recessive bits (Bus Idle state). The switch to Normal mode is confirmed by the hardware by clearing the INAK bit in the CAN_MSR register.

The initialization of the filter values is independent from Initialization Mode but must be done while the filter is not active (corresponding FACTx bit cleared). The filter scale and mode configuration must be configured before entering Normal Mode.

41.4.3 Sleep mode (low-power)

To reduce power consumption, bxCAN has a low-power mode called Sleep mode. This mode is entered on software request by setting the SLEEP bit in the CAN_MCR register. In this mode, the bxCAN clock is stopped, however software can still access the bxCAN mailboxes.

If software requests entry to **initialization** mode by setting the INRQ bit while bxCAN is in **Sleep** mode, it must also clear the SLEEP bit.

bxCAN can be woken up (exit Sleep mode) either by software clearing the SLEEP bit or on detection of CAN bus activity.

On CAN bus activity detection, hardware automatically performs the wakeup sequence by clearing the SLEEP bit if the AWUM bit in the CAN_MCR register is set. If the AWUM bit is cleared, software has to clear the SLEEP bit when a wakeup interrupt occurs, in order to exit from Sleep mode.

Note: If the wakeup interrupt is enabled (WKUIE bit set in CAN_IER register) a wakeup interrupt will be generated on detection of CAN bus activity, even if the bxCAN automatically performs the wakeup sequence.

After the SLEEP bit has been cleared, Sleep mode is exited once bxCAN has synchronized with the CAN bus, refer to *Figure 452: bxCAN operating modes*. The Sleep mode is exited once the SLAK bit has been cleared by hardware.

Figure 452. bxCAN operating modes

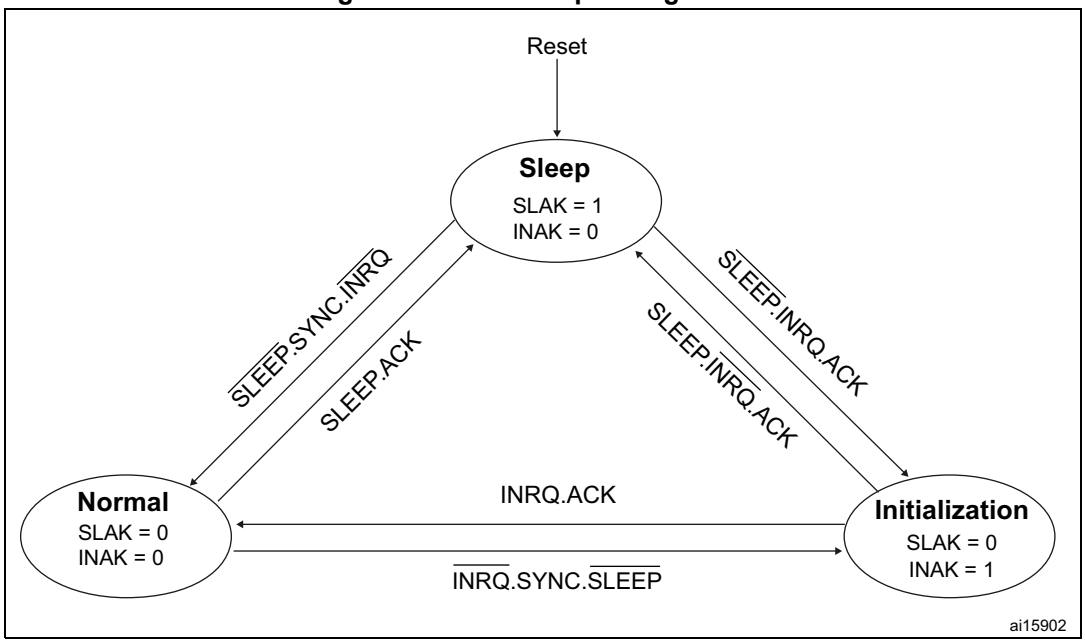

1. ACK = The wait state during which hardware confirms a request by setting the INAK or SLAK bits in the CAN_MSR register
2. SYNC = The state during which bxCAN waits until the CAN bus is idle, meaning 11 consecutive recessive bits have been monitored on CANRX

41.5 Test mode

Test mode can be selected by the SILM and LBKM bits in the CAN_BTR register. These bits must be configured while bxCAN is in Initialization mode. Once test mode has been selected, the INRQ bit in the CAN_MCR register must be reset to enter Normal mode.

41.5.1 Silent mode

The bxCAN can be put in Silent mode by setting the SILM bit in the CAN_BTR register.

In Silent mode, the bxCAN is able to receive valid data frames and valid remote frames, but it sends only recessive bits on the CAN bus and it cannot start a transmission. If the bxCAN has to send a dominant bit (ACK bit, overload flag, active error flag), the bit is rerouted internally so that the CAN Core monitors this dominant bit, although the CAN bus may remain in recessive state. Silent mode can be used to analyze the traffic on a CAN bus without affecting it by the transmission of dominant bits (Acknowledge Bits, Error Frames).

Figure 453. bxCAN in silent mode

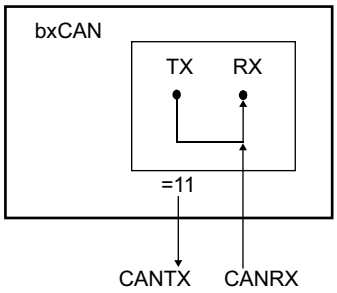

41.5.2 Loop back mode

The bxCAN can be set in Loop Back Mode by setting the LBKM bit in the CAN_BTR register. In Loop Back Mode, the bxCAN treats its own transmitted messages as received messages and stores them (if they pass acceptance filtering) in a Receive mailbox.

Figure 454. bxCAN in loop back mode

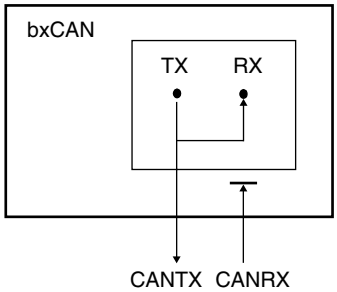

This mode is provided for self-test functions. To be independent of external events, the CAN Core ignores acknowledge errors (no dominant bit sampled in the acknowledge slot of a data / remote frame) in Loop Back Mode. In this mode, the bxCAN performs an internal feedback from its Tx output to its Rx input. The actual value of the CANRX input pin is disregarded by the bxCAN. The transmitted messages can be monitored on the CANTX pin.

41.5.3 Loop back combined with silent mode

It is also possible to combine Loop Back mode and Silent mode by setting the LBKM and SILM bits in the CAN_BTR register. This mode can be used for a “Hot Selftest”, meaning the bxCAN can be tested like in Loop Back mode but without affecting a running CAN system connected to the CANTX and CANRX pins. In this mode, the CANRX pin is disconnected from the bxCAN and the CANTX pin is held recessive.

Figure 455. bxCAN in combined mode

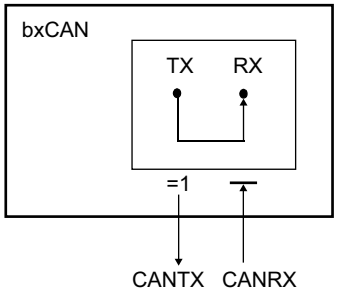

41.6 Behavior in Debug mode

When the microcontroller enters the debug mode (Cortex®-M4 core halted), the bxCAN continues to work normally or stops, depending on:

- the DBF bit in CAN_MCR. For more details, refer to *Section 41.9.2: CAN control and status registers*.

41.7 bxCAN functional description

41.7.1 Transmission handling

In order to transmit a message, the application must select one **empty** transmit mailbox, set up the identifier, the data length code (DLC) and the data before requesting the transmission by setting the corresponding TXRQ bit in the CAN_TIxR register. Once the mailbox has left **empty** state, the software no longer has write access to the mailbox registers. Immediately after the TXRQ bit has been set, the mailbox enters **pending** state and waits to become the highest priority mailbox, see *Transmit Priority*. As soon as the mailbox has the highest priority it will be **scheduled** for transmission. The transmission of the message of the scheduled mailbox will start (enter **transmit** state) when the CAN bus becomes idle. Once the mailbox has been successfully transmitted, it will become **empty** again. The hardware indicates a successful transmission by setting the RQCP and TXOK bits in the CAN_TSR register.

If the transmission fails, the cause is indicated by the ALST bit in the CAN_TSR register in case of an Arbitration Lost, and/or the TERR bit, in case of transmission error detection.

Transmit priority

By identifier

When more than one transmit mailbox is pending, the transmission order is given by the identifier of the message stored in the mailbox. The message with the lowest identifier value has the highest priority according to the arbitration of the CAN protocol. If the identifier values are equal, the lower mailbox number will be scheduled first.

By transmit request order

The transmit mailboxes can be configured as a transmit FIFO by setting the TXFP bit in the CAN_MCR register. In this mode the priority order is given by the transmit request order.

This mode is very useful for segmented transmission.

Abort

A transmission request can be aborted by the user setting the ABRQ bit in the CAN_TSR register. In **pending** or **scheduled** state, the mailbox is aborted immediately. An abort request while the mailbox is in **transmit** state can have two results. If the mailbox is transmitted successfully the mailbox becomes **empty** with the TXOK bit set in the CAN_TSR register. If the transmission fails, the mailbox becomes **scheduled,** the transmission is aborted and becomes **empty** with TXOK cleared. In all cases the mailbox will become **empty** again at least at the end of the current transmission.

Non automatic retransmission mode

This mode has been implemented in order to fulfill the requirement of the Time Triggered Communication option of the CAN standard. To configure the hardware in this mode the NART bit in the CAN_MCR register must be set.

In this mode, each transmission is started only once. If the first attempt fails, due to an arbitration loss or an error, the hardware will not automatically restart the message transmission.

At the end of the first transmission attempt, the hardware considers the request as completed and sets the RQCP bit in the CAN_TSR register. The result of the transmission is indicated in the CAN_TSR register by the TXOK, ALST and TERR bits.

Figure 456. Transmit mailbox states

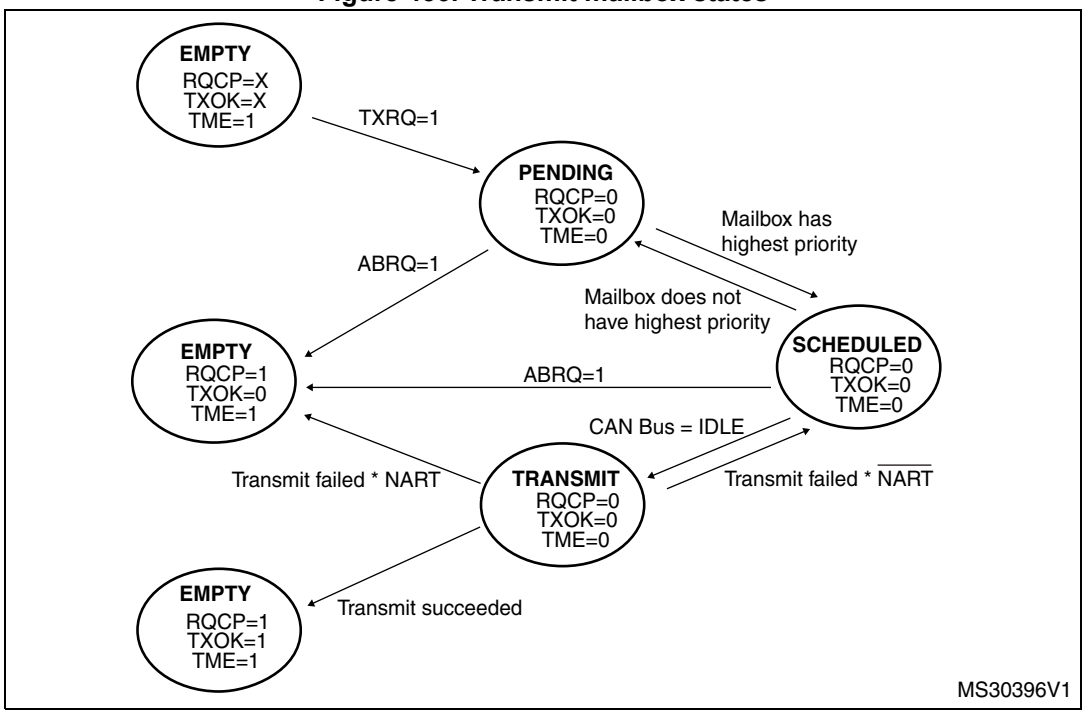

41.7.2 Time triggered communication mode

In this mode, the internal counter of the CAN hardware is activated and used to generate the Time Stamp value stored in the CAN_RDTxR/CAN_TDTxR registers, respectively (for Rx and Tx mailboxes). The internal counter is incremented each CAN bit time (refer to *Section 41.7.7: Bit timing*). The internal counter is captured on the sample point of the Start Of Frame bit in both reception and transmission.

41.7.3 Reception handling

For the reception of CAN messages, three mailboxes organized as a FIFO are provided. In order to save CPU load, simplify the software and guarantee data consistency, the FIFO is managed completely by hardware. The application accesses the messages stored in the FIFO through the FIFO output mailbox.

Valid message

A received message is considered as valid **when** it has been received correctly according to the CAN protocol (no error until the last but one bit of the EOF field) **and** It passed through the identifier filtering successfully, see *Section 41.7.4: Identifier filtering*.

Figure 457. Receive FIFO states

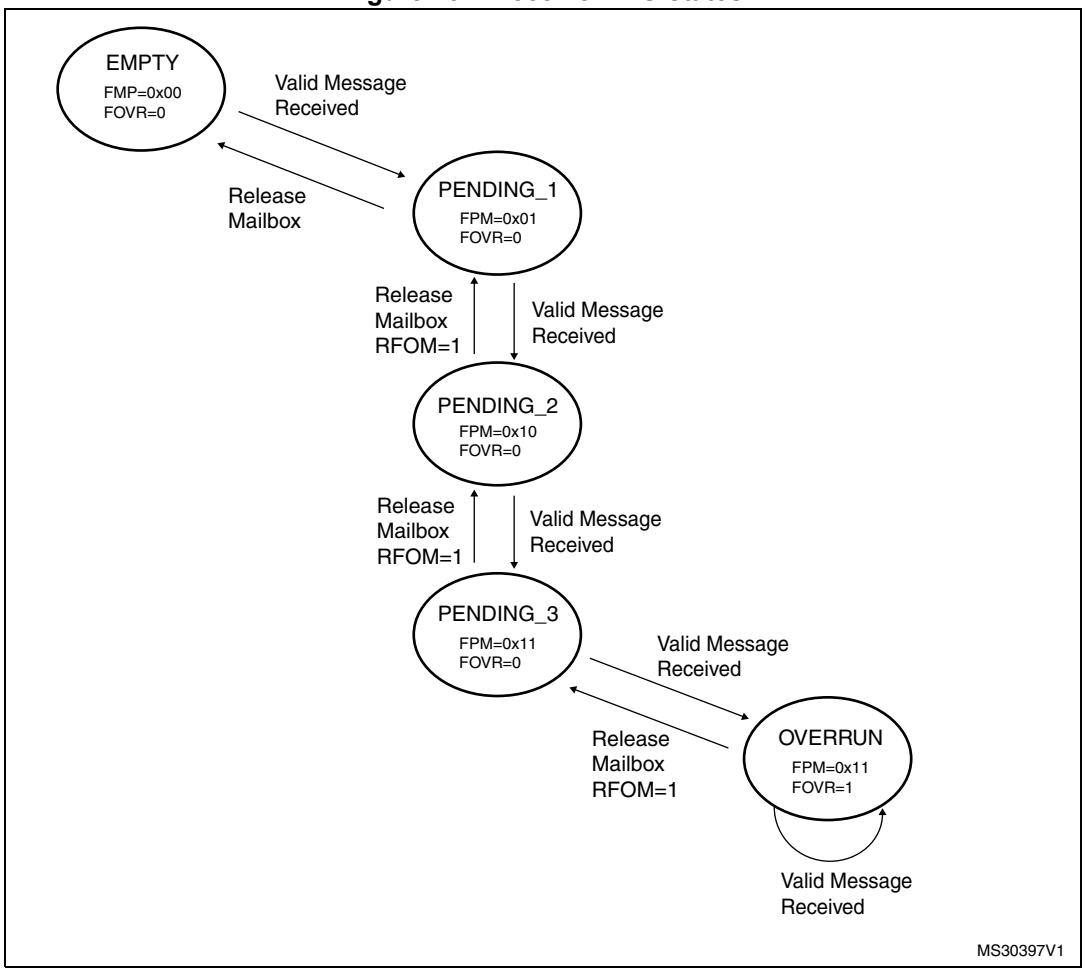

FIFO management

Starting from the **empty** state, the first valid message received is stored in the FIFO which becomes **pending_1**. The hardware signals the event setting the FMP[1:0] bits in the CAN_RFR register to the value 01b. The message is available in the FIFO output mailbox. The software reads out the mailbox content and releases it by setting the RFOM bit in the CAN_RFR register. The FIFO becomes **empty** again. If a new valid message has been received in the meantime, the FIFO stays in **pending_1** state and the new message is available in the output mailbox.

If the application does not release the mailbox, the next valid message will be stored in the FIFO which enters **pending_2** state (FMP[1:0] = 10b). The storage process is repeated for the next valid message putting the FIFO into **pending_3** state (FMP[1:0] = 11b). At this point, the software must release the output mailbox by setting the RFOM bit, so that a mailbox is free to store the next valid message. Otherwise the next valid message received will cause a loss of message.

Refer also to *Section 41.7.5: Message storage*

Overrun

Once the FIFO is in **pending_3** state (i.e. the three mailboxes are full) the next valid message reception will lead to an **overrun** and a message will be lost. The hardware signals the overrun condition by setting the FOVR bit in the CAN_RFR register. Which message is lost depends on the configuration of the FIFO:

- If the FIFO lock function is disabled (RFLM bit in the CAN_MCR register cleared) the last message stored in the FIFO will be overwritten by the new incoming message. In this case the latest messages will be always available to the application.
- If the FIFO lock function is enabled (RFLM bit in the CAN_MCR register set) the most recent message will be discarded and the software will have the three oldest messages in the FIFO available.

Reception related interrupts

Once a message has been stored in the FIFO, the FMP[1:0] bits are updated and an interrupt request is generated if the FMPIE bit in the CAN_IER register is set.

When the FIFO becomes full (i.e. a third message is stored) the FULL bit in the CAN_RFR register is set and an interrupt is generated if the FFIE bit in the CAN_IER register is set.

On overrun condition, the FOVR bit is set and an interrupt is generated if the FOVIE bit in the CAN_IER register is set.

41.7.4 Identifier filtering

In the CAN protocol the identifier of a message is not associated with the address of a node but related to the content of the message. Consequently a transmitter broadcasts its message to all receivers. On message reception a receiver node decides - depending on the identifier value - whether the software needs the message or not. If the message is needed, it is copied into the SRAM. If not, the message must be discarded without intervention by the software.

To fulfill this requirement, the bxCAN Controller provides 28 configurable and scalable filter banks (27-0) to the application. In other devices the bxCAN Controller provides 14

configurable and scalable filter banks (13-0) to the application in order to receive only the messages the software needs. This hardware filtering saves CPU resources which would be otherwise needed to perform filtering by software. Each filter bank x consists of two 32-bit registers, CAN_FxR0 and CAN_FxR1.

Scalable width

To optimize and adapt the filters to the application needs, each filter bank can be scaled independently. Depending on the filter scale a filter bank provides:

- One 32-bit filter for the STDID[10:0], EXTID[17:0], IDE and RTR bits.
- Two 16-bit filters for the STDID[10:0], RTR, IDE and EXTID[17:15] bits.

Refer to *Figure 458*.

Furthermore, the filters can be configured in mask mode or in identifier list mode.

Mask mode

In **mask** mode the identifier registers are associated with mask registers specifying which bits of the identifier are handled as “must match” or as “don’t care”.

Identifier list mode

In **identifier list** mode, the mask registers are used as identifier registers. Thus instead of defining an identifier and a mask, two identifiers are specified, doubling the number of single identifiers. All bits of the incoming identifier must match the bits specified in the filter registers.

Filter bank scale and mode configuration

The filter banks are configured by means of the corresponding CAN_FMR register. To configure a filter bank it must be deactivated by clearing the FACT bit in the CAN_FAR register. The filter scale is configured by means of the corresponding FSCx bit in the CAN_FS1R register, refer to *Figure 458*. The **identifier list** or **identifier mask** mode for the corresponding Mask/Identifier registers is configured by means of the FBMx bits in the CAN_FMR register.

To filter a group of identifiers, configure the Mask/Identifier registers in mask mode.

To select single identifiers, configure the Mask/Identifier registers in identifier list mode.

Filters not used by the application should be left deactivated.

Each filter within a filter bank is numbered (called the *Filter Number*) from 0 to a maximum dependent on the mode and the scale of each of the filter banks.

Concerning the filter configuration, refer to *Figure 458*.

Figure 458. Filter bank scale configuration - register organization

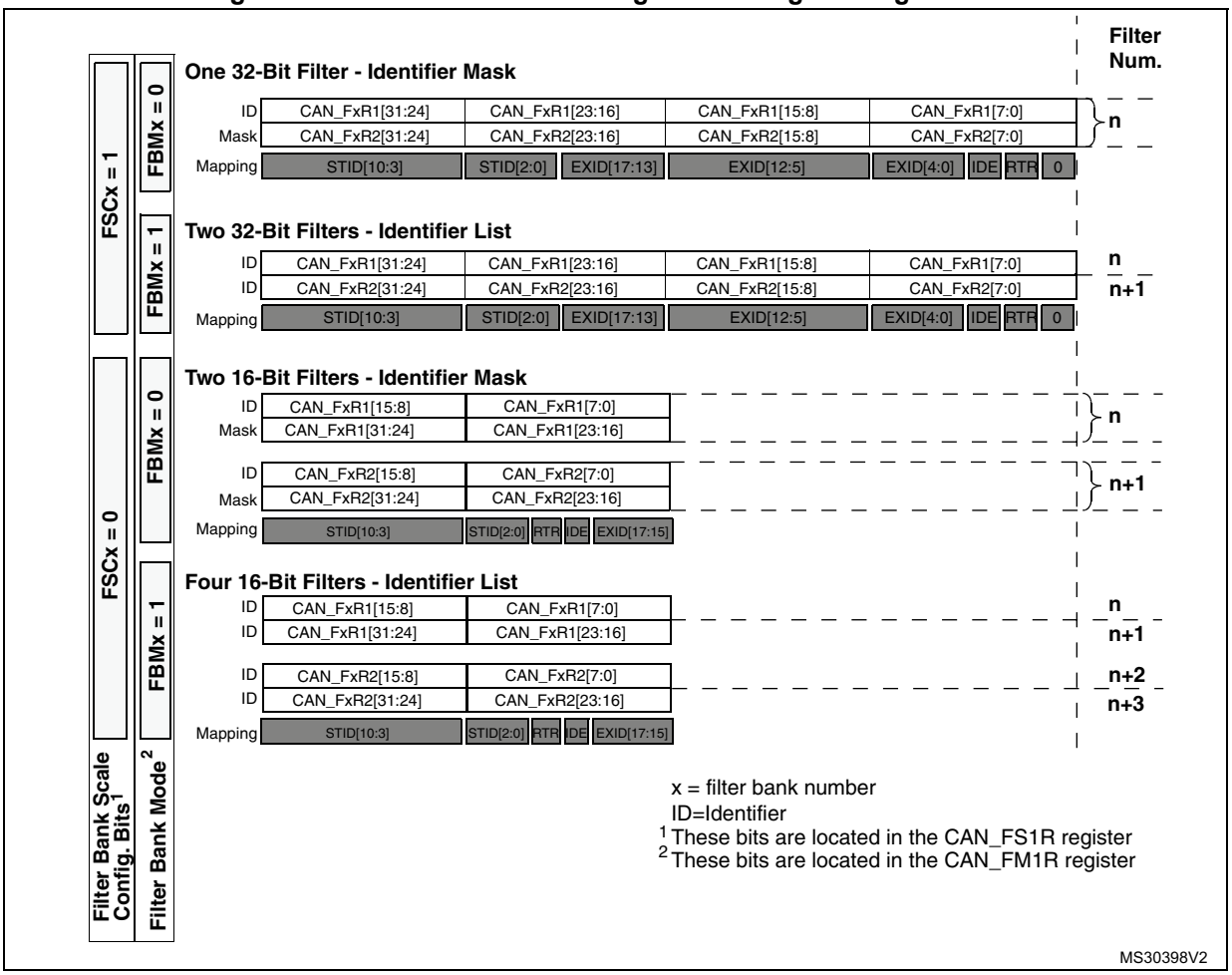

Filter match index

Once a message has been received in the FIFO it is available to the application. Typically, application data is copied into SRAM locations. To copy the data to the right location the application has to identify the data by means of the identifier. To avoid this, and to ease the access to the SRAM locations, the CAN controller provides a Filter Match Index.

This index is stored in the mailbox together with the message according to the filter priority rules. Thus each received message has its associated filter match index.

The Filter Match index can be used in two ways:

- Compare the Filter Match index with a list of expected values.
- Use the Filter Match Index as an index on an array to access the data destination location.

For non masked filters, the software no longer has to compare the identifier.

If the filter is masked the software reduces the comparison to the masked bits only.

The index value of the filter number does not take into account the activation state of the filter banks. In addition, two independent numbering schemes are used, one for each FIFO. Refer to *Figure 459* for an example.

Figure 459. Example of filter numbering

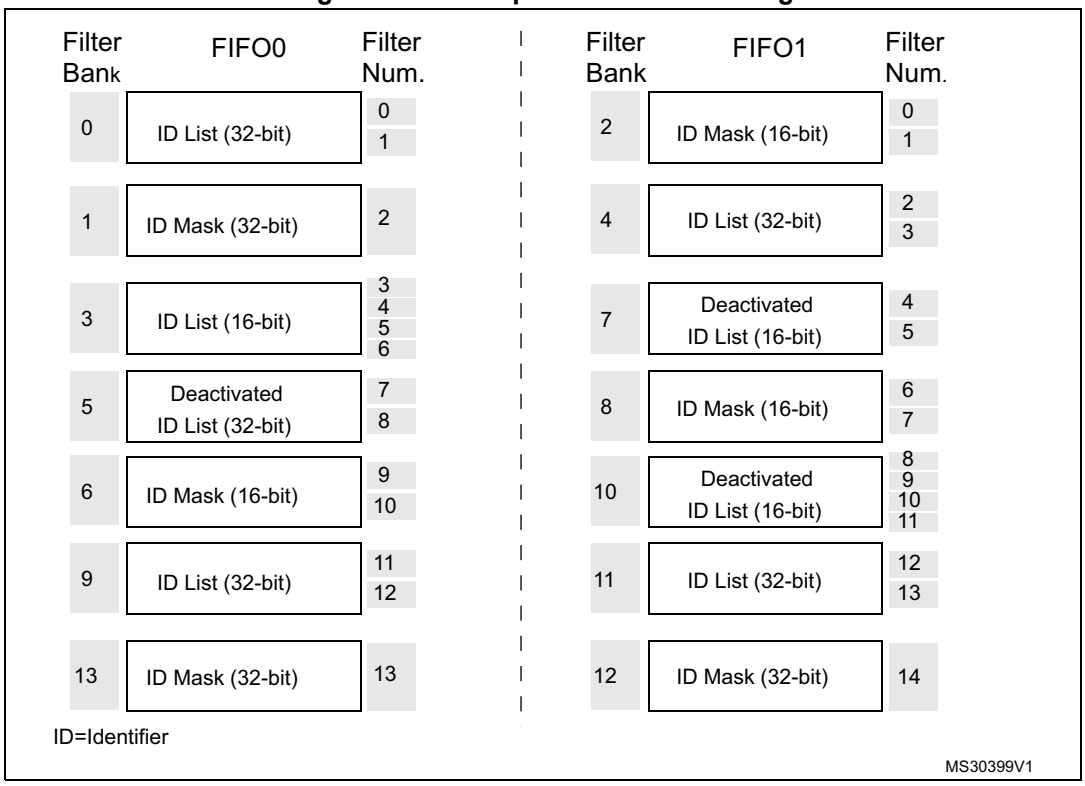

Filter priority rules

Depending on the filter combination it may occur that an identifier passes successfully through several filters. In this case the filter match value stored in the receive mailbox is chosen according to the following priority rules:

- A 32-bit filter takes priority over a 16-bit filter.
- For filters of equal scale, priority is given to the Identifier List mode over the Identifier Mask mode
- For filters of equal scale and mode, priority is given by the filter number (the lower the number, the higher the priority).

Figure 460. Filtering mechanism - example

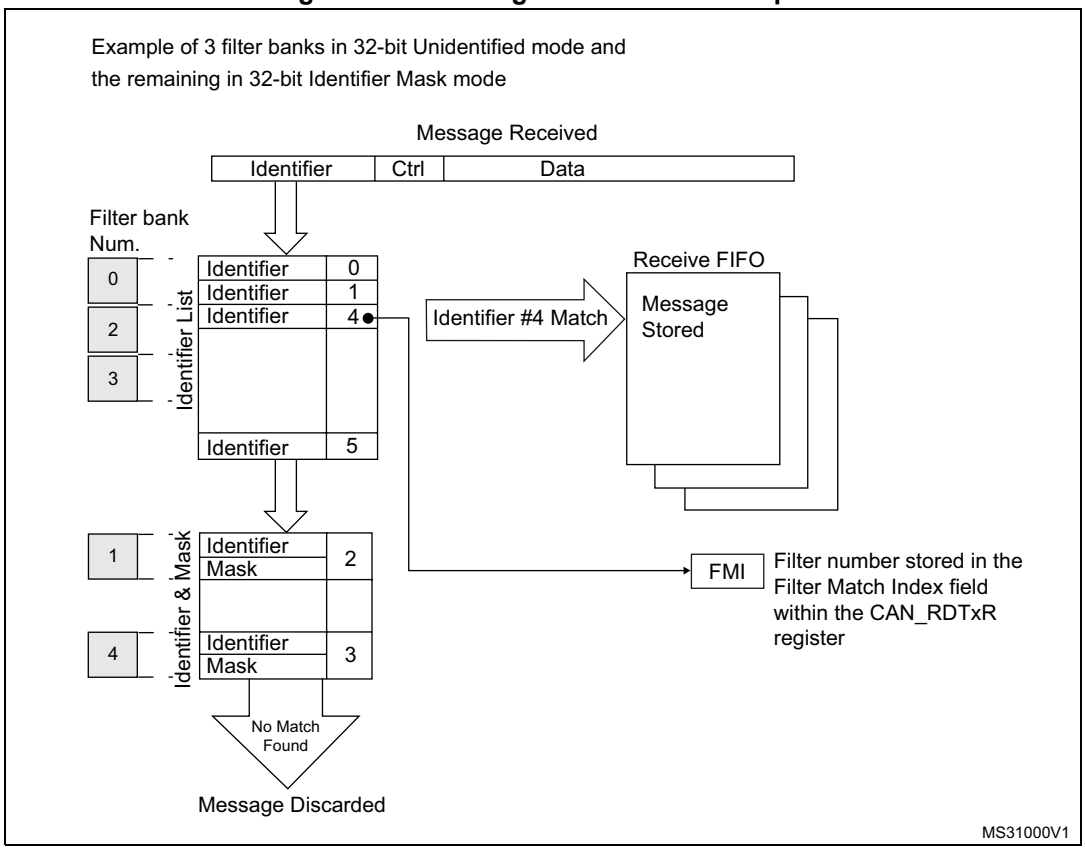

The example above shows the filtering principle of the bxCAN. On reception of a message, the identifier is compared first with the filters configured in identifier list mode. If there is a match, the message is stored in the associated FIFO and the index of the matching filter is stored in the Filter Match Index. As shown in the example, the identifier matches with Identifier #2 thus the message content and FMI 2 is stored in the FIFO.

If there is no match, the incoming identifier is then compared with the filters configured in mask mode.

If the identifier does not match any of the identifiers configured in the filters, the message is discarded by hardware without disturbing the software.

41.7.5 Message storage

The interface between the software and the hardware for the CAN messages is implemented by means of mailboxes. A mailbox contains all information related to a message; identifier, data, control, status and time stamp information.

Transmit mailbox

The software sets up the message to be transmitted in an empty transmit mailbox. The status of the transmission is indicated by hardware in the CAN_TSR register.

Table 218. Transmit mailbox mapping

Offset to transmit mailbox base address	Register name
0	CAN_TIxR
4	CAN_TDTxR
8	CAN_TDLxR
12	CAN_TDHxR

Receive mailbox

When a message has been received, it is available to the software in the FIFO output mailbox. Once the software has handled the message (e.g. read it) the software must release the FIFO output mailbox by means of the RFOM bit in the CAN_RFR register to make the next incoming message available. The filter match index is stored in the MFMI field of the CAN_RDTxR register. The 16-bit time stamp value is stored in the TIME[15:0] field of CAN_RDTxR.

Table 219. Receive mailbox mapping

Offset to receive mailbox base address (bytes)	Register name
0	CAN_RIxR
4	CAN_RDTxR
8	CAN_RDLxR
12	CAN_RDHxR

Figure 461. CAN error state diagram

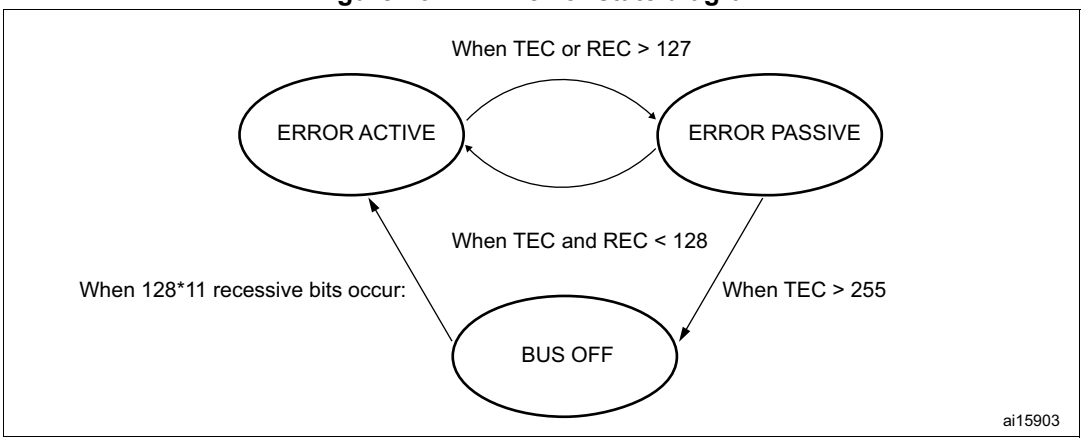

41.7.6 Error management

The error management as described in the CAN protocol is handled entirely by hardware using a Transmit Error Counter (TEC value, in CAN_ESR register) and a Receive Error Counter (REC value, in the CAN_ESR register), which get incremented or decremented according to the error condition. For detailed information about TEC and REC management, please refer to the CAN standard.

Both of them may be read by software to determine the stability of the network. Furthermore, the CAN hardware provides detailed information on the current error status in CAN_ESR register. By means of the CAN_IER register (ERRIE bit, etc.), the software can configure the interrupt generation on error detection in a very flexible way.

Bus-Off recovery

The Bus-Off state is reached when TEC is greater than 255, this state is indicated by BOFF bit in CAN_ESR register. In Bus-Off state, the bxCAN is no longer able to transmit and receive messages.

Depending on the ABOM bit in the CAN_MCR register bxCAN will recover from Bus-Off (become error active again) either automatically or on software request. But in both cases the bxCAN has to wait at least for the recovery sequence specified in the CAN standard (128 occurrences of 11 consecutive recessive bits monitored on CANRX).

If ABOM is set, the bxCAN will start the recovering sequence automatically after it has entered Bus-Off state.

If ABOM is cleared, the software must initiate the recovering sequence by requesting bxCAN to enter and to leave initialization mode.

Note: In initialization mode, bxCAN does not monitor the CANRX signal, therefore it cannot complete the recovery sequence. ***To recover, bxCAN must be in normal mode****.*

41.7.7 Bit timing

The bit timing logic monitors the serial bus-line and performs sampling and adjustment of the sample point by synchronizing on the start-bit edge and resynchronizing on the following edges.

Its operation may be explained simply by splitting nominal bit time into three segments as follows:

- **Synchronization segment (SYNC_SEG)**: a bit change is expected to occur within this time segment. It has a fixed length of one time quantum (1 x t_q).
- **Bit segment 1 (BS1)**: defines the location of the sample point. It includes the PROP_SEG and PHASE_SEG1 of the CAN standard. Its duration is programmable between 1 and 16 time quanta but may be automatically lengthened to compensate for positive phase drifts due to differences in the frequency of the various nodes of the network.
- **Bit segment 2 (BS2)**: defines the location of the transmit point. It represents the PHASE_SEG2 of the CAN standard. Its duration is programmable between 1 and 8 time quanta but may also be automatically shortened to compensate for negative phase drifts.

The resynchronization Jump Width (SJW) defines an upper bound to the amount of lengthening or shortening of the bit segments. It is programmable between 1 and 4 time quanta.

A valid edge is defined as the first transition in a bit time from dominant to recessive bus level provided the controller itself does not send a recessive bit.

If a valid edge is detected in BS1 instead of SYNC_SEG, BS1 is extended by up to SJW so that the sample point is delayed.

Conversely, if a valid edge is detected in BS2 instead of SYNC_SEG, BS2 is shortened by up to SJW so that the transmit point is moved earlier.

As a safeguard against programming errors, the configuration of the Bit Timing Register (CAN_BTR) is only possible while the device is in Standby mode.

Note: For a detailed description of the CAN bit timing and resynchronization mechanism, please refer to the ISO 11898 standard.

Figure 462. Bit timing

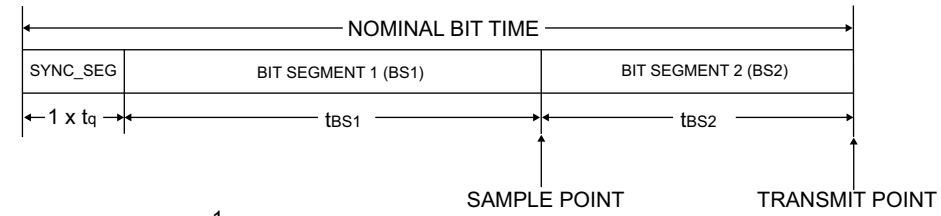

$$\text{BaudRate} = \frac{1}{\text{NominalBitTime}}$$

$$\text{NominalBitTime} = 1 \times t_q + t_{BS1} + t_{BS2}$$

with

$t_{BS1} = t_q \times (TS1[3:0] + 1)$

$t_{BS2} = t_q \times (TS2[2:0] + 1)$

$t_q = (BRP[9:0] + 1) \times t_{PCLK}$

where t_q refers to the time quantum

t_{PCLK} = time period of the APB clock

BRP[9:0], TS1[3:0], TS2[2:0] are defined in the CAN_BTR register

MS31001V1

Figure 463. CAN frames

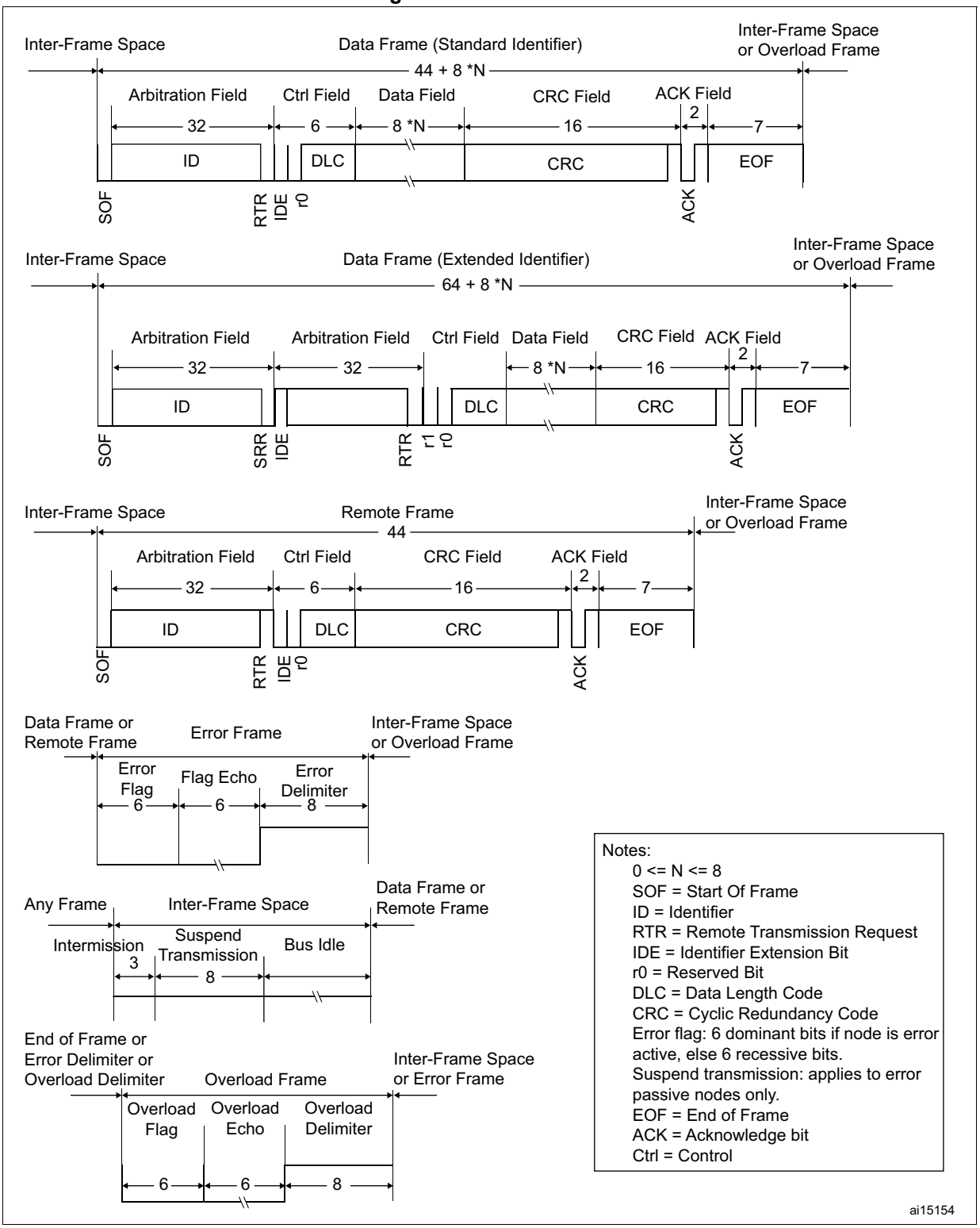

41.8 bxCAN interrupts

Four interrupt vectors are dedicated to bxCAN. Each interrupt source can be independently enabled or disabled by means of the CAN Interrupt Enable Register (CAN_IER).

Figure 464. Event flags and interrupt generation

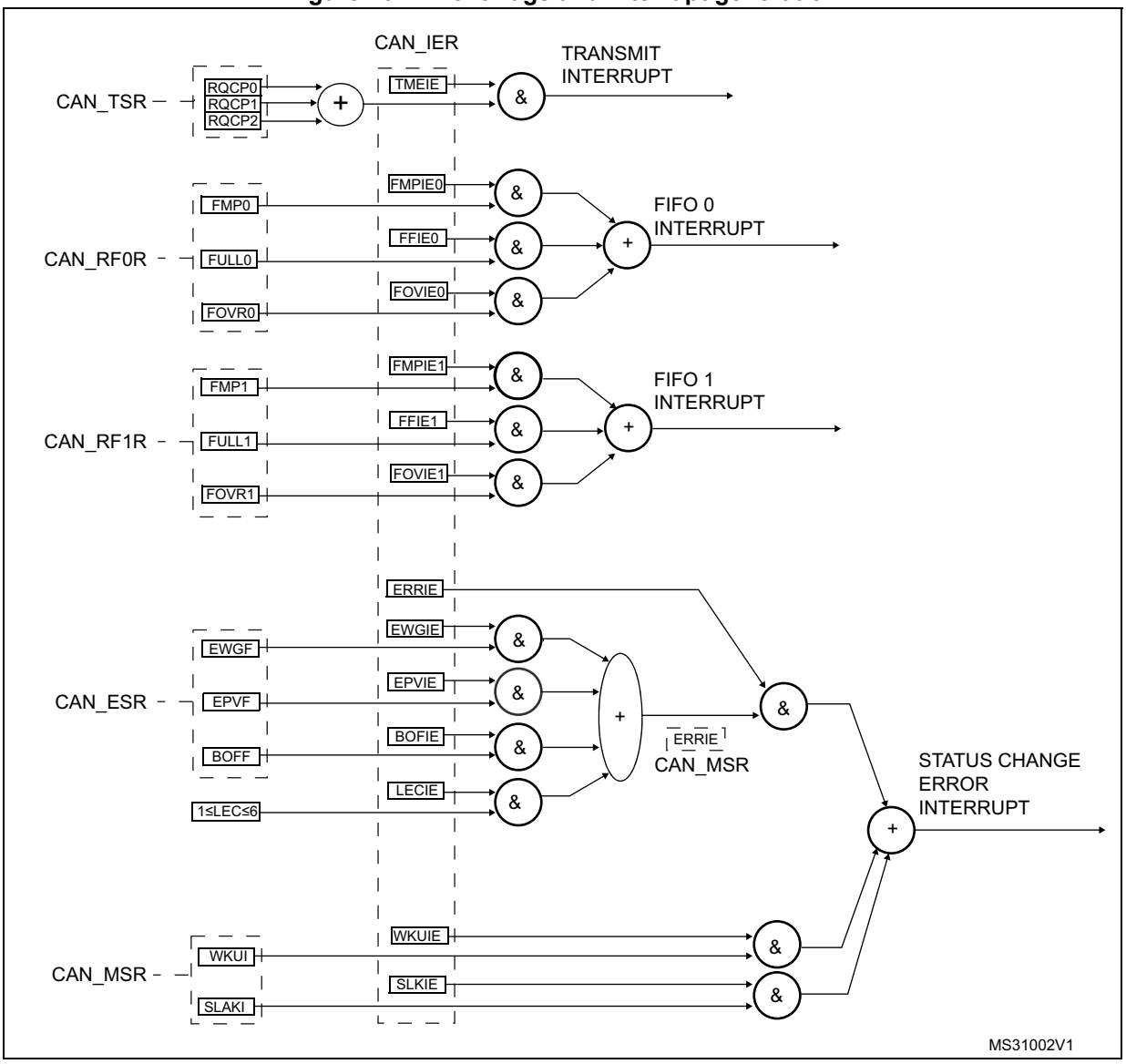

- The **transmit interrupt** can be generated by the following events:
  - Transmit mailbox 0 becomes empty, RQCP0 bit in the CAN_TSR register set.
  - Transmit mailbox 1 becomes empty, RQCP1 bit in the CAN_TSR register set.
  - Transmit mailbox 2 becomes empty, RQCP2 bit in the CAN_TSR register set.
- The **FIFO 0 interrupt** can be generated by the following events:
  - Reception of a new message, FMP0 bits in the CAN_RF0R register are not ‘00’.
  - FIFO0 full condition, FULL0 bit in the CAN_RF0R register set.
  - FIFO0 overrun condition, FOVR0 bit in the CAN_RF0R register set.

- The **FIFO 1 interrupt** can be generated by the following events:
  - Reception of a new message, FMP1 bits in the CAN_RF1R register are not ‘00’.
  - FIFO1 full condition, FULL1 bit in the CAN_RF1R register set.
  - FIFO1 overrun condition, FOVR1 bit in the CAN_RF1R register set.
- The **error and status change interrupt** can be generated by the following events:
  - Error condition, for more details on error conditions please refer to the CAN Error Status register (CAN_ESR).
  - Wakeup condition, SOF monitored on the CAN Rx signal.
  - Entry into Sleep mode.

41.9 CAN registers

The peripheral registers have to be accessed by words (32 bits).

41.9.1 Register access protection

Erroneous access to certain configuration registers can cause the hardware to temporarily disturb the whole CAN network. Therefore the CAN_BTR register can be modified by software only while the CAN hardware is in initialization mode.

Although the transmission of incorrect data will not cause problems at the CAN network level, it can severely disturb the application. A transmit mailbox can be only modified by software while it is in empty state, refer to *Figure 456: Transmit mailbox states*.

The filter values can be modified either deactivating the associated filter banks or by setting the FINIT bit. Moreover, the modification of the filter configuration (scale, mode and FIFO assignment) in CAN_FMxR, CAN_FSxR and CAN_FFAR registers can only be done when the filter initialization mode is set (FINIT=1) in the CAN_FMR register.

41.9.2 CAN control and status registers

Refer to *Section 1.1* for a list of abbreviations used in register descriptions.

CAN master control register (CAN_MCR)

Address offset: 0x00
Reset value: 0x0001 0002

31	30	29	28	27	26	25	24	23	22	21	20	19	18	17	16
Res.	Res.	Res.	Res.	Res.	Res.	Res.	Res.	Res.	Res.	Res.	Res.	Res.	Res.	Res.	DBF
															rw

15	14	13	12	11	10	9	8	7	6	5	4	3	2	1	0
RESET	Res.	Res.	Res.	Res.	Res.	Res.	Res.	TTCM	ABOM	AWUM	NART	RFLM	TXFP	SLEEP	INRQ
rs								rw	rw	rw	rw	rw	rw	rw	rw

Bits 31:17 Reserved, must be kept at reset value.

Bit 16 **DBF:** Debug freeze

0: CAN working during debug

1: CAN reception/transmission frozen during debug. Reception FIFOs can still be accessed/controlled normally.

Bit 15 **RESET:** bxCAN software master reset

0: Normal operation.

1: Force a master reset of the bxCAN -> Sleep mode activated after reset (FMP bits and CAN_MCR register are initialized to the reset values). This bit is automatically reset to 0.

Bits 14:8 Reserved, must be kept at reset value.

Bit 7 **TTCM**: Time triggered communication mode

0: Time Triggered Communication mode disabled.

1: Time Triggered Communication mode enabled

Note: For more information on Time Triggered Communication mode, please refer to Section 41.7.2: Time triggered communication mode.

Bit 6 **ABOM:** Automatic bus-off management

This bit controls the behavior of the CAN hardware on leaving the Bus-Off state.

0: The Bus-Off state is left on software request, once 128 occurrences of 11 recessive bits have been monitored and the software has first set and cleared the INRQ bit of the CAN_MCR register.

1: The Bus-Off state is left automatically by hardware once 128 occurrences of 11 recessive bits have been monitored.

For detailed information on the Bus-Off state please refer to *Section 41.7.6: Error management*.

Bit 5 **AWUM**: Automatic wakeup mode

This bit controls the behavior of the CAN hardware on message reception during Sleep mode.

0: The Sleep mode is left on software request by clearing the SLEEP bit of the CAN_MCR register.

1: The Sleep mode is left automatically by hardware on CAN message detection.

The SLEEP bit of the CAN_MCR register and the SLAK bit of the CAN_MSR register are cleared by hardware.

Bit 4 **NART**: No automatic retransmission

0: The CAN hardware will automatically retransmit the message until it has been successfully transmitted according to the CAN standard.

1: A message will be transmitted only once, independently of the transmission result (successful, error or arbitration lost).

Bit 3 **RFLM**: Receive FIFO locked mode

0: Receive FIFO not locked on overrun. Once a receive FIFO is full the next incoming message will overwrite the previous one.

1: Receive FIFO locked against overrun. Once a receive FIFO is full the next incoming message will be discarded.

Bit 2 **TXFP**: Transmit FIFO priority

This bit controls the transmission order when several mailboxes are pending at the same time.
0: Priority driven by the identifier of the message
1: Priority driven by the request order (chronologically)

Bit 1 **SLEEP**: Sleep mode request

This bit is set by software to request the CAN hardware to enter the Sleep mode. Sleep mode will be entered as soon as the current CAN activity (transmission or reception of a CAN frame) has been completed.
This bit is cleared by software to exit Sleep mode.
This bit is cleared by hardware when the AWUM bit is set and a SOF bit is detected on the CAN Rx signal.
This bit is set after reset - CAN starts in Sleep mode.

Bit 0 **INRQ**: Initialization request

The software clears this bit to switch the hardware into normal mode. Once 11 consecutive recessive bits have been monitored on the Rx signal the CAN hardware is synchronized and ready for transmission and reception. Hardware signals this event by clearing the INAK bit in the CAN_MSR register.
Software sets this bit to request the CAN hardware to enter initialization mode. Once software has set the INRQ bit, the CAN hardware waits until the current CAN activity (transmission or reception) is completed before entering the initialization mode. Hardware signals this event by setting the INAK bit in the CAN_MSR register.

CAN master status register (CAN_MSR)

Address offset: 0x04
Reset value: 0x0000 0C02

31	30	29	28	27	26	25	24	23	22	21	20	19	18	17	16
Res.	Res.	Res.	Res.	Res.	Res.	Res.	Res.	Res.	Res.	Res.	Res.	Res.	Res.	Res.	Res.

15	14	13	12	11	10	9	8	7	6	5	4	3	2	1	0
Res.	Res.	Res.	Res.	RX	SAMP	RXM	TXM	Res.	Res.	Res.	SLAKI	WKUI	ERRI	SLAK	INAK
				r	r	r	r				rc_w1	rc_w1	rc_w1	r	r

Bits 31:12 Reserved, must be kept at reset value.

Bit 11 **RX**: CAN Rx signal

Monitors the actual value of the **CAN_RX** Pin.

Bit 10 **SAMP**: Last sample point

The value of RX on the last sample point (current received bit value).

Bit 9 **RXM**: Receive mode

The CAN hardware is currently receiver.

Bit 8 **TXM**: Transmit mode

The CAN hardware is currently transmitter.

Bits 7:5 Reserved, must be kept at reset value.

Bit 4 **SLAKI**: Sleep acknowledge interrupt

When SLKIE=1, this bit is set by hardware to signal that the bxCAN has entered Sleep Mode. When set, this bit generates a status change interrupt if the SLKIE bit in the CAN_IER register is set.
This bit is cleared by software or by hardware, when SLAK is cleared.

Note: When SLKIE=0, no polling on SLAKI is possible. In this case the SLAK bit can be polled.

Bit 3 **WKUI**: Wakeup interrupt

This bit is set by hardware to signal that a SOF bit has been detected while the CAN hardware was in Sleep mode. Setting this bit generates a status change interrupt if the WKUIE bit in the CAN_IER register is set.
This bit is cleared by software.

Bit 2 **ERRI**: Error interrupt

This bit is set by hardware when a bit of the CAN_ESR has been set on error detection and the corresponding interrupt in the CAN_IER is enabled. Setting this bit generates a status change interrupt if the ERRIE bit in the CAN_IER register is set.
This bit is cleared by software.

Bit 1 **SLAK**: Sleep acknowledge

This bit is set by hardware and indicates to the software that the CAN hardware is now in Sleep mode. This bit acknowledges the Sleep mode request from the software (set SLEEP bit in CAN_MCR register).
This bit is cleared by hardware when the CAN hardware has left Sleep mode (to be synchronized on the CAN bus). To be synchronized the hardware has to monitor a sequence of 11 consecutive recessive bits on the CAN RX signal.

Note: The process of leaving Sleep mode is triggered when the SLEEP bit in the CAN_MCR register is cleared. Please refer to the AWUM bit of the CAN_MCR register description for detailed information for clearing SLEEP bit

Bit 0 **INAK**: Initialization acknowledge

This bit is set by hardware and indicates to the software that the CAN hardware is now in initialization mode. This bit acknowledges the initialization request from the software (set INRQ bit in CAN_MCR register).
This bit is cleared by hardware when the CAN hardware has left the initialization mode (to be synchronized on the CAN bus). To be synchronized the hardware has to monitor a sequence of 11 consecutive recessive bits on the CAN RX signal.

CAN transmit status register (CAN_TSR)

Address offset: 0x08
Reset value: 0x1C00 0000

31	30	29	28	27	26	25	24	23	22	21	20	19	18	17	16
LOW2	LOW1	LOW0	TME2	TME1	TME0	CODE[1:0]		ABRQ2	Res.	Res.	Res.	TERR2	ALST2	TXOK2	RQCP2
r	r	r	r	r	r	r	r	rs				rc_w1	rc_w1	rc_w1	rc_w1
15	14	13	12	11	10	9	8	7	6	5	4	3	2	1	0
ABRQ1	Res.	Res.	Res.	TERR1	ALST1	TXOK1	RQCP1	ABRQ0	Res.	Res.	Res.	TERR0	ALST0	TXOK0	RQCP0
rs				rc_w1	rc_w1	rc_w1	rc_w1	rs				rc_w1	rc_w1	rc_w1	rc_w1

Bit 31 **LOW2**: Lowest priority flag for mailbox 2

This bit is set by hardware when more than one mailbox are pending for transmission and mailbox 2 has the lowest priority.

Bit 30 **LOW1**: Lowest priority flag for mailbox 1

This bit is set by hardware when more than one mailbox are pending for transmission and mailbox 1 has the lowest priority.

Bit 29 **LOW0**: Lowest priority flag for mailbox 0

This bit is set by hardware when more than one mailbox are pending for transmission and mailbox 0 has the lowest priority.

Note: The LOW[2:0] bits are set to zero when only one mailbox is pending.

Bit 28 **TME2**: Transmit mailbox 2 empty

This bit is set by hardware when no transmit request is pending for mailbox 2.

Bit 27 **TME1**: Transmit mailbox 1 empty

This bit is set by hardware when no transmit request is pending for mailbox 1.

Bit 26 **TME0**: Transmit mailbox 0 empty

This bit is set by hardware when no transmit request is pending for mailbox 0.

Bits 25:24 **CODE[1:0]**: Mailbox code

In case at least one transmit mailbox is free, the code value is equal to the number of the next transmit mailbox free.
In case all transmit mailboxes are pending, the code value is equal to the number of the transmit mailbox with the lowest priority.

Bit 23 **ABRQ2**: Abort request for mailbox 2

Set by software to abort the transmission request for the corresponding mailbox.
Cleared by hardware when the mailbox becomes empty.
Setting this bit has no effect when the mailbox is not pending for transmission.

Bits 22:20 Reserved, must be kept at reset value.

Bit 19 **TERR2**: Transmission error of mailbox 2

This bit is set when the previous TX failed due to an error.

Bit 18 **ALST2**: Arbitration lost for mailbox 2

This bit is set when the previous TX failed due to an arbitration lost.

Bit 17 **TXOK2**: Transmission OK of mailbox 2

The hardware updates this bit after each transmission attempt.
0: The previous transmission failed
1: The previous transmission was successful
This bit is set by hardware when the transmission request on mailbox 2 has been completed successfully. Please refer to *Figure 456*.

Bit 16 **RQCP2**: Request completed mailbox2

Set by hardware when the last request (transmit or abort) has been performed.
Cleared by software writing a “1” or by hardware on transmission request (TXRQ2 set in CAN_TMID2R register).
Clearing this bit clears all the status bits (TXOK2, ALST2 and TERR2) for Mailbox 2.

Bit 15 **ABRQ1**: Abort request for mailbox 1

Set by software to abort the transmission request for the corresponding mailbox.
Cleared by hardware when the mailbox becomes empty.
Setting this bit has no effect when the mailbox is not pending for transmission.

Bits 14:12 Reserved, must be kept at reset value.

Bit 11 **TERR1**: Transmission error of mailbox1
This bit is set when the previous TX failed due to an error.

Bit 10 **ALST1**: Arbitration lost for mailbox1
This bit is set when the previous TX failed due to an arbitration lost.

Bit 9 **TXOK1**: Transmission OK of mailbox1
The hardware updates this bit after each transmission attempt.
0: The previous transmission failed
1: The previous transmission was successful
This bit is set by hardware when the transmission request on mailbox 1 has been completed successfully. Please refer to *Figure 456*

Bit 8 **RQCP1**: Request completed mailbox1
Set by hardware when the last request (transmit or abort) has been performed.
Cleared by software writing a “1” or by hardware on transmission request (TXRQ1 set in CAN_TI1R register).
Clearing this bit clears all the status bits (TXOK1, ALST1 and TERR1) for Mailbox 1.

Bit 7 **ABRQ0**: Abort request for mailbox0
Set by software to abort the transmission request for the corresponding mailbox.
Cleared by hardware when the mailbox becomes empty.
Setting this bit has no effect when the mailbox is not pending for transmission.

Bits 6:4 Reserved, must be kept at reset value.

Bit 3 **TERR0**: Transmission error of mailbox0
This bit is set when the previous TX failed due to an error.

Bit 2 **ALST0**: Arbitration lost for mailbox0
This bit is set when the previous TX failed due to an arbitration lost.

Bit 1 **TXOK0**: Transmission OK of mailbox0
The hardware updates this bit after each transmission attempt.
0: The previous transmission failed
1: The previous transmission was successful
This bit is set by hardware when the transmission request on mailbox 1 has been completed successfully. Please refer to *Figure 456*

Bit 0 **RQCP0**: Request completed mailbox0
Set by hardware when the last request (transmit or abort) has been performed.
Cleared by software writing a “1” or by hardware on transmission request (TXRQ0 set in CAN_TI0R register).
Clearing this bit clears all the status bits (TXOK0, ALST0 and TERR0) for Mailbox 0.

CAN receive FIFO 0 register (CAN_RF0R)

Address offset: 0x0C
Reset value: 0x0000 0000

31	30	29	28	27	26	25	24	23	22	21	20	19	18	17	16
Res.	Res.	Res.	Res.	Res.	Res.	Res.	Res.	Res.	Res.	Res.	Res.	Res.	Res.	Res.	Res.

15	14	13	12	11	10	9	8	7	6	5	4	3	2	1	0
Res.	Res.	Res.	Res.	Res.	Res.	Res.	Res.	Res.	Res.	RFOM0	FOVR0	FULL0	Res.	FMP0[1:0]	
										rs	rc_w1	rc_w1		r	r

Bits 31:6 Reserved, must be kept at reset value.

Bit 5 **RFOM0**: Release FIFO 0 output mailbox

Set by software to release the output mailbox of the FIFO. The output mailbox can only be released when at least one message is pending in the FIFO. Setting this bit when the FIFO is empty has no effect. If at least two messages are pending in the FIFO, the software has to release the output mailbox to access the next message.
Cleared by hardware when the output mailbox has been released.

Bit 4 **FOVR0**: FIFO 0 overrun

This bit is set by hardware when a new message has been received and passed the filter while the FIFO was full.
This bit is cleared by software.

Bit 3 **FULL0**: FIFO 0 full

Set by hardware when three messages are stored in the FIFO.
This bit is cleared by software.

Bit 2 Reserved, must be kept at reset value.

Bits 1:0 **FMP0[1:0]**: FIFO 0 message pending

These bits indicate how many messages are pending in the receive FIFO.
FMP is increased each time the hardware stores a new message in to the FIFO. FMP is decreased each time the software releases the output mailbox by setting the RFOM0 bit.

CAN receive FIFO 1 register (CAN_RF1R)

Address offset: 0x10
Reset value: 0x0000 0000

31	30	29	28	27	26	25	24	23	22	21	20	19	18	17	16
Res.	Res.	Res.	Res.	Res.	Res.	Res.	Res.	Res.	Res.	Res.	Res.	Res.	Res.	Res.	Res.

15	14	13	12	11	10	9	8	7	6	5	4	3	2	1	0
Res.	Res.	Res.	Res.	Res.	Res.	Res.	Res.	Res.	Res.	RFOM1	FOVR1	FULL1	Res.	FMP1[1:0]	
										rs	rc_w1	rc_w1		r	r

Bits 31:6 Reserved, must be kept at reset value.

Bit 5 **RFOM1**: Release FIFO 1 output mailbox

Set by software to release the output mailbox of the FIFO. The output mailbox can only be released when at least one message is pending in the FIFO. Setting this bit when the FIFO is empty has no effect. If at least two messages are pending in the FIFO, the software has to release the output mailbox to access the next message.
Cleared by hardware when the output mailbox has been released.

Bit 4 **FOVR1**: FIFO 1 overrun

This bit is set by hardware when a new message has been received and passed the filter while the FIFO was full.
This bit is cleared by software.

Bit 3 **FULL1**: FIFO 1 full
Set by hardware when three messages are stored in the FIFO.
This bit is cleared by software.

Bit 2 Reserved, must be kept at reset value.

Bits 1:0 **FMP1[1:0]**: FIFO 1 message pending
These bits indicate how many messages are pending in the receive FIFO1.
FMP1 is increased each time the hardware stores a new message in to the FIFO1. FMP is decreased each time the software releases the output mailbox by setting the RFOM1 bit.

CAN interrupt enable register (CAN_IER)

Address offset: 0x14
Reset value: 0x0000 0000

31	30	29	28	27	26	25	24	23	22	21	20	19	18	17	16
Res.	Res.	Res.	Res.	Res.	Res.	Res.	Res.	Res.	Res.	Res.	Res.	Res.	Res.	SLKIE	WKUIE
														rw	rw

15	14	13	12	11	10	9	8	7	6	5	4	3	2	1	0
ERRIE	Res.	Res.	Res.	LEC IE	BOF IE	EPV IE	EWG IE	Res.	FOV IE1	FF IE1	FMP IE1	FOV IE0	FF IE0	FMP IE0	TME IE
rw				rw	rw	rw	rw		rw	rw	rw	rw	rw	rw	rw

Bits 31:18 Reserved, must be kept at reset value.

Bit 17 **SLKIE**: Sleep interrupt enable
0: No interrupt when SLAKI bit is set.
1: Interrupt generated when SLAKI bit is set.

Bit 16 **WKUIE**: Wakeup interrupt enable
0: No interrupt when WKUI is set.
1: Interrupt generated when WKUI bit is set.

Bit 15 **ERRIE**: Error interrupt enable
0: No interrupt will be generated when an error condition is pending in the CAN_ESR.
1: An interrupt will be generation when an error condition is pending in the CAN_ESR.

Bits 14:12 Reserved, must be kept at reset value.

Bit 11 **LECIE**: Last error code interrupt enable
0: ERRI bit will not be set when the error code in LEC[2:0] is set by hardware on error detection.
1: ERRI bit will be set when the error code in LEC[2:0] is set by hardware on error detection.

Bit 10 **BOFIE**: Bus-off interrupt enable
0: ERRI bit will not be set when BOFF is set.
1: ERRI bit will be set when BOFF is set.

Bit 9 **EPVIE**: Error passive interrupt enable
0: ERRI bit will not be set when EPVF is set.
1: ERRI bit will be set when EPVF is set.

Bit 8 **EWGIE**: Error warning interrupt enable
0: ERRI bit will not be set when EWGF is set.
1: ERRI bit will be set when EWGF is set.

Bit 7 Reserved, must be kept at reset value.

Bit 6 **FOVIE1**: FIFO overrun interrupt enable
0: No interrupt when FOVR is set.
1: Interrupt generation when FOVR is set.

Bit 5 **FFIE1**: FIFO full interrupt enable
0: No interrupt when FULL bit is set.
1: Interrupt generated when FULL bit is set.

Bit 4 **FMPIE1**: FIFO message pending interrupt enable
0: No interrupt generated when state of FMP[1:0] bits are not 00b.
1: Interrupt generated when state of FMP[1:0] bits are not 00b.

Bit 3 **FOVIE0**: FIFO overrun interrupt enable
0: No interrupt when FOVR bit is set.
1: Interrupt generated when FOVR bit is set.

Bit 2 **FFIE0**: FIFO full interrupt enable
0: No interrupt when FULL bit is set.
1: Interrupt generated when FULL bit is set.

Bit 1 **FMPIE0**: FIFO message pending interrupt enable
0: No interrupt generated when state of FMP[1:0] bits are not 00b.
1: Interrupt generated when state of FMP[1:0] bits are not 00b.

Bit 0 **TMEIE**: Transmit mailbox empty interrupt enable
0: No interrupt when RQCPx bit is set.
1: Interrupt generated when RQCPx bit is set.

Note: Refer to Section 41.8: bxCAN interrupts.

CAN error status register (CAN_ESR)

Address offset: 0x18
Reset value: 0x0000 0000

31	30	29	28	27	26	25	24	23	22	21	20	19	18	17	16
REC[7:0]								TEC[7:0]							
r	r	r	r	r	r	r	r	r	r	r	r	r	r	r	r
15	14	13	12	11	10	9	8	7	6	5	4	3	2	1	0
Res.	Res.	Res.	Res.	Res.	Res.	Res.	Res.	Res.	LEC[2:0]			Res.	BOFF	EPVF	EWGF
									rw	rw	rw		r	r	r

Bits 31:24 **REC[7:0]**: Receive error counter

The implementing part of the fault confinement mechanism of the CAN protocol. In case of an error during reception, this counter is incremented by 1 or by 8 depending on the error condition as defined by the CAN standard. After every successful reception the counter is decremented by 1 or reset to 120 if its value was higher than 128. When the counter value exceeds 127, the CAN controller enters the error passive state.

Bits 23:16 **TEC[7:0]**: Least significant byte of the 9-bit transmit error counter

The implementing part of the fault confinement mechanism of the CAN protocol.

Bits 15:7 Reserved, must be kept at reset value.

Bits 6:4 **LEC[2:0]**: Last error code

This field is set by hardware and holds a code which indicates the error condition of the last error detected on the CAN bus. If a message has been transferred (reception or transmission) without error, this field will be cleared to '0'.
The LEC[2:0] bits can be set to value 0b111 by software. They are updated by hardware to indicate the current communication status.
000: No Error
001: Stuff Error
010: Form Error
011: Acknowledgment Error
100: Bit recessive Error
101: Bit dominant Error
110: CRC Error
111: Set by software

Bit 3 Reserved, must be kept at reset value.

Bit 2 **BOFF**: Bus-off flag

This bit is set by hardware when it enters the bus-off state. The bus-off state is entered on TEC overflow, greater than 255, refer to *Section 41.7.6 on page 1322*.

Bit 1 **EPVF**: Error passive flag

This bit is set by hardware when the Error Passive limit has been reached (Receive Error Counter or Transmit Error Counter>127).

Bit 0 **EWGF**: Error warning flag

This bit is set by hardware when the warning limit has been reached (Receive Error Counter or Transmit Error Counter ≥ 96).

CAN bit timing register (CAN_BTR)

Address offset: 0x1C
Reset value: 0x0123 0000

This register can only be accessed by the software when the CAN hardware is in initialization mode.

31	30	29	28	27	26	25	24	23	22	21	20	19	18	17	16
SILM	LBKM	Res.	Res.	Res.	Res.	SJW[1:0]		Res.	TS2[2:0]			TS1[3:0]			
rw	rw					rw	rw		rw	rw	rw	rw	rw	rw	rw
15	14	13	12	11	10	9	8	7	6	5	4	3	2	1	0
Res.	Res.	Res.	Res.	Res.	Res.	BRP[9:0]									
						rw	rw	rw	rw	rw	rw	rw	rw	rw	rw

Bit 31 **SILM**: Silent mode (debug)
0: Normal operation
1: Silent Mode

Bit 30 **LBKM**: Loop back mode (debug)
0: Loop Back Mode disabled
1: Loop Back Mode enabled

Bits 29:26 Reserved, must be kept at reset value.

Bits 25:24 **SJW[1:0]**: Resynchronization jump width
These bits define the maximum number of time quanta the CAN hardware is allowed to lengthen or shorten a bit to perform the resynchronization.
$t_{RJW} = t_q$ x (SJW[1:0] + 1)

Bit 23 Reserved, must be kept at reset value.

Bits 22:20 **TS2[2:0]**: Time segment 2
These bits define the number of time quanta in Time Segment 2.
$t_{BS2} = t_q$ x (TS2[2:0] + 1)

Bits 19:16 **TS1[3:0]**: Time segment 1
These bits define the number of time quanta in Time Segment 1
$t_{BS1} = t_q$ x (TS1[3:0] + 1)
For more information on bit timing, please refer to *Section 41.7.7: Bit timing on page 1322*.

Bits 15:10 Reserved, must be kept at reset value.

Bits 9:0 **BRP[9:0]**: Baud rate prescaler
These bits define the length of a time quanta.
t_q = (BRP[9:0]+1) x t_{PCLK}

41.9.3 CAN mailbox registers

This section describes the registers of the transmit and receive mailboxes. Refer to *Section 41.7.5: Message storage on page 1320* for detailed register mapping.

Transmit and receive mailboxes have the same registers except:

- The FMI field in the CAN_RDTxR register.
- A receive mailbox is always write protected.
- A transmit mailbox is write-enabled only while empty, corresponding TME bit in the CAN_TSR register set.

There are 3 TX Mailboxes and 2 RX Mailboxes. Each RX Mailbox allows access to a 3 level depth FIFO, the access being offered only to the oldest received message in the FIFO.

Each mailbox consist of 4 registers.

Figure 465. Can mailbox registers

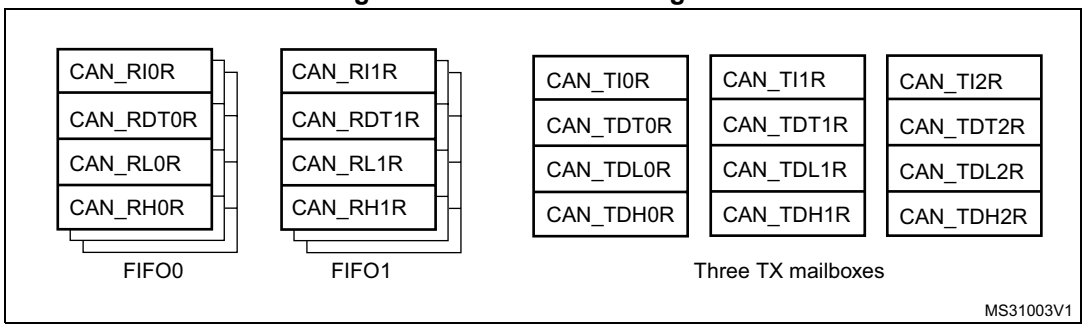

CAN TX mailbox identifier register (CAN_TIxR) (x = 0..2)

Address offsets: 0x180, 0x190, 0x1A0
Reset value: 0xXXXX XXXX (except bit 0, TXRQ = 0)

All TX registers are write protected when the mailbox is pending transmission (TMEx reset).

This register also implements the TX request control (bit 0) - reset value 0.

31	30	29	28	27	26	25	24	23	22	21	20	19	18	17	16
STID[10:0]/EXID[28:18]											EXID[17:13]				
rw	rw	rw	rw	rw	rw	rw	rw	rw	rw	rw	rw	rw	rw	rw	rw
15	14	13	12	11	10	9	8	7	6	5	4	3	2	1	0
EXID[12:0]													IDE	RTR	TXRQ
rw	rw	rw	rw	rw	rw	rw	rw	rw	rw	rw	rw	rw	rw	rw	rw

Bits 31:21 **STID[10:0]/EXID[28:18]**: Standard identifier or extended identifier
The standard identifier or the MSBs of the extended identifier (depending on the IDE bit value).

Bit 20:3 **EXID[17:0]**: Extended identifier
The LSBs of the extended identifier.

Bit 2 **IDE**: Identifier extension
This bit defines the identifier type of message in the mailbox.
0: Standard identifier.
1: Extended identifier.

Bit 1 **RTR**: Remote transmission request
0: Data frame
1: Remote frame

Bit 0 **TXRQ**: Transmit mailbox request
Set by software to request the transmission for the corresponding mailbox.
Cleared by hardware when the mailbox becomes empty.

CAN mailbox data length control and time stamp register (CAN_TDTxR) (x = 0..2)

All bits of this register are write protected when the mailbox is not in empty state.

Address offsets: 0x184, 0x194, 0x1A4
Reset value: 0xXXXX XXXX

31	30	29	28	27	26	25	24	23	22	21	20	19	18	17	16
TIME[15:0]															
rw	rw	rw	rw	rw	rw	rw	rw	rw	rw	rw	rw	rw	rw	rw	rw
15	14	13	12	11	10	9	8	7	6	5	4	3	2	1	0
Res.	Res.	Res.	Res.	Res.	Res.	Res.	Res.	Res.	Res.	Res.	Res.	DLC[3:0]			
												rw	rw	rw	rw

Bits 31:16 **TIME[15:0]**: Message time stamp
This field contains the 16-bit timer value captured at the SOF transmission.

Bits 15:9 Reserved, must be kept at reset value.

Bit 8 **TGT**: Transmit global time
This bit is active only when the hardware is in the Time Trigger Communication mode, TTCM bit of the CAN_MCR register is set.
0: Time stamp TIME[15:0] is not sent.
1: Time stamp TIME[15:0] value is sent in the last two data bytes of the 8-byte message: TIME[7:0] in data byte 7 and TIME[15:8] in data byte 6, replacing the data written in CAN_TDHxR[31:16] register (DATA6[7:0] and DATA7[7:0]). DLC must be programmed as 8 in order these two bytes to be sent over the CAN bus.

Bits 7:4 Reserved, must be kept at reset value.

Bits 3:0 **DLC[3:0]**: Data length code
This field defines the number of data bytes a data frame contains or a remote frame request. A message can contain from 0 to 8 data bytes, depending on the value in the DLC field.

CAN mailbox data low register (CAN_TDLxR) (x = 0..2)

All bits of this register are write protected when the mailbox is not in empty state.

Address offsets: 0x188, 0x198, 0x1A8
Reset value: 0xXXXX XXXX

31	30	29	28	27	26	25	24	23	22	21	20	19	18	17	16
DATA3[7:0]								DATA2[7:0]							
rw	rw	rw	rw	rw	rw	rw	rw	rw	rw	rw	rw	rw	rw	rw	rw
15	14	13	12	11	10	9	8	7	6	5	4	3	2	1	0
DATA1[7:0]								DATA0[7:0]							
rw	rw	rw	rw	rw	rw	rw	rw	rw	rw	rw	rw	rw	rw	rw	rw

Bits 31:24 **DATA3[7:0]**: Data byte 3
Data byte 3 of the message.

Bits 23:16 **DATA2[7:0]**: Data byte 2
Data byte 2 of the message.

Bits 15:8 **DATA1[7:0]**: Data byte 1
Data byte 1 of the message.

Bits 7:0 **DATA0[7:0]**: Data byte 0
Data byte 0 of the message.
A message can contain from 0 to 8 data bytes and starts with byte 0.

CAN mailbox data high register (CAN_TDHxR) (x = 0..2)

All bits of this register are write protected when the mailbox is not in empty state.

Address offsets: 0x18C, 0x19C, 0x1AC
Reset value: 0xXXXX XXXX

31	30	29	28	27	26	25	24	23	22	21	20	19	18	17	16
DATA7[7:0]								DATA6[7:0]							
rw	rw	rw	rw	rw	rw	rw	rw	rw	rw	rw	rw	rw	rw	rw	rw
15	14	13	12	11	10	9	8	7	6	5	4	3	2	1	0
DATA5[7:0]								DATA4[7:0]							
rw	rw	rw	rw	rw	rw	rw	rw	rw	rw	rw	rw	rw	rw	rw	rw

Bits 31:24 **DATA7[7:0]**: Data byte 7
Data byte 7 of the message.
Note: If TGT of this message and TTCM are active, DATA7 and DATA6 will be replaced by the TIME stamp value.

Bits 23:16 **DATA6[7:0]**: Data byte 6
Data byte 6 of the message.

Bits 15:8 **DATA5[7:0]**: Data byte 5
Data byte 5 of the message.

Bits 7:0 **DATA4[7:0]**: Data byte 4
Data byte 4 of the message.

CAN receive FIFO mailbox identifier register (CAN_RIxR) (x = 0..1)

Address offsets: 0x1B0, 0x1C0
Reset value: 0xXXXX XXXX

All RX registers are write protected.

31	30	29	28	27	26	25	24	23	22	21	20	19	18	17	16
STID[10:0]/EXID[28:18]											EXID[17:13]				
r	r	r	r	r	r	r	r	r	r	r	r	r	r	r	r

15	14	13	12	11	10	9	8	7	6	5	4	3	2	1	0
EXID[12:0]													IDE	RTR	Res
r	r	r	r	r	r	r	r	r	r	r	r	r	r	r	

Bits 31:21 **STID[10:0]/EXID[28:18]**: Standard identifier or extended identifier
The standard identifier or the MSBs of the extended identifier (depending on the IDE bit value).

Bits 20:3 **EXID[17:0]**: Extended identifier
The LSBs of the extended identifier.

Bit 2 **IDE**: Identifier extension
This bit defines the identifier type of message in the mailbox.
0: Standard identifier.
1: Extended identifier.

Bit 1 **RTR**: Remote transmission request
0: Data frame
1: Remote frame

Bit 0 Reserved, must be kept at reset value.

CAN receive FIFO mailbox data length control and time stamp register (CAN_RDTxR) (x = 0..1)

Address offsets: 0x1B4, 0x1C4
Reset value: 0xXXXX XXXX

All RX registers are write protected.

31	30	29	28	27	26	25	24	23	22	21	20	19	18	17	16
TIME[15:0]															
r	r	r	r	r	r	r	r	r	r	r	r	r	r	r	r
15	14	13	12	11	10	9	8	7	6	5	4	3	2	1	0
FMI[7:0]								Res.	Res.	Res.	Res.	DLC[3:0]			
r	r	r	r	r	r	r	r					r	r	r	r

Bits 31:16 **TIME[15:0]**: Message time stamp
This field contains the 16-bit timer value captured at the SOF detection.

Bits 15:8 **FMI[7:0]**: Filter match index
This register contains the index of the filter the message stored in the mailbox passed through. For more details on identifier filtering please refer to *Section 41.7.4: Identifier filtering on page 1316* - **Filter Match Index** paragraph.

Bits 7:4 Reserved, must be kept at reset value.

Bits 3:0 **DLC[3:0]**: Data length code
This field defines the number of data bytes a data frame contains (0 to 8). It is 0 in the case of a remote frame request.

CAN receive FIFO mailbox data low register (CAN_RDLxR) (x = 0..1)

All bits of this register are write protected when the mailbox is not in empty state.

Address offsets: 0x1B8, 0x1C8
Reset value: 0xXXXX XXXX

All RX registers are write protected.

31	30	29	28	27	26	25	24	23	22	21	20	19	18	17	16
DATA3[7:0]								DATA2[7:0]							
r	r	r	r	r	r	r	r	r	r	r	r	r	r	r	r
15	14	13	12	11	10	9	8	7	6	5	4	3	2	1	0
DATA1[7:0]								DATA0[7:0]							
r	r	r	r	r	r	r	r	r	r	r	r	r	r	r	r

Bits 31:24 **DATA3[7:0]**: Data Byte 3
Data byte 3 of the message.

Bits 23:16 **DATA2[7:0]**: Data Byte 2
Data byte 2 of the message.

Bits 15:8 **DATA1[7:0]**: Data Byte 1
Data byte 1 of the message.

Bits 7:0 **DATA0[7:0]**: Data Byte 0
Data byte 0 of the message.
A message can contain from 0 to 8 data bytes and starts with byte 0.

CAN receive FIFO mailbox data high register (CAN_RDHxR) (x = 0..1)

Address offsets: 0x1BC, 0x1CC
Reset value: 0xXXXX XXXX

All RX registers are write protected.

31	30	29	28	27	26	25	24	23	22	21	20	19	18	17	16
DATA7[7:0]								DATA6[7:0]							
r	r	r	r	r	r	r	r	r	r	r	r	r	r	r	r
15	14	13	12	11	10	9	8	7	6	5	4	3	2	1	0
DATA5[7:0]								DATA4[7:0]							
r	r	r	r	r	r	r	r	r	r	r	r	r	r	r	r

Bits 31:24 **DATA7[7:0]**: Data Byte 7
Data byte 3 of the message.

Bits 23:16 **DATA6[7:0]**: Data Byte 6
Data byte 2 of the message.

Bits 15:8 **DATA5[7:0]**: Data Byte 5
Data byte 1 of the message.

Bits 7:0 **DATA4[7:0]**: Data Byte 4
Data byte 0 of the message.

41.9.4 CAN filter registers

CAN filter master register (CAN_FMR)

Address offset: 0x200
Reset value: 0x2A1C 0E01

All bits of this register are set and cleared by software.

31	30	29	28	27	26	25	24	23	22	21	20	19	18	17	16
Res.	Res.	Res.	Res.	Res.	Res.	Res.	Res.	Res.	Res.	Res.	Res.	Res.	Res.	Res.	Res.

15	14	13	12	11	10	9	8	7	6	5	4	3	2	1	0
Res.	Res.	Res.	Res.	Res.	Res.	Res.	Res.	Res.	Res.	Res.	Res.	Res.	Res.	Res.	FINIT
															rw

Bits 31:1 Reserved, must be kept at reset value.

Bit 0 **FINIT**: Filter initialization mode
Initialization mode for filter banks
0: Active filters mode.
1: Initialization mode for the filters.

CAN filter mode register (CAN_FM1R)

Address offset: 0x204
Reset value: 0x0000 0000

This register can be written only when the filter initialization mode is set (FINIT=1) in the CAN_FMR register.

31	30	29	28	27	26	25	24	23	22	21	20	19	18	17	16
Res.	Res.	Res.	Res.	Res.	Res.	Res.	Res.	Res.	Res.	Res.	Res.	Res.	Res.	Res.	Res.
15	14	13	12	11	10	9	8	7	6	5	4	3	2	1	0
Res.	Res.	FBM13	FBM12	FBM11	FBM10	FBM9	FBM8	FBM7	FBM6	FBM5	FBM4	FBM3	FBM2	FBM1	FBM0
		rw	rw	rw	rw	rw	rw	rw	rw	rw	rw	rw	rw	rw	rw

Note: Please refer to Figure 458: Filter bank scale configuration - register organization on page 1318

Bits 31:14 Reserved, must be kept at reset value.

Bits 13:0 **FBM*x***: Filter mode
Mode of the registers of Filter x.
0: Two 32-bit registers of filter bank x are in Identifier Mask mode.
1: Two 32-bit registers of filter bank x are in Identifier List mode.
Note: Bits 27:14 are available in connectivity line devices only and are reserved otherwise.

CAN filter scale register (CAN_FS1R)

Address offset: 0x20C
Reset value: 0x0000 0000

This register can be written only when the filter initialization mode is set (FINIT=1) in the CAN_FMR register.

31	30	29	28	27	26	25	24	23	22	21	20	19	18	17	16
Res.	Res.	Res.	Res.	Res.	Res.	Res.	Res.	Res.	Res.	Res.	Res.	Res.	Res.	Res.	Res.
15	14	13	12	11	10	9	8	7	6	5	4	3	2	1	0
Res.	Res.	FSC13	FSC12	FSC11	FSC10	FSC9	FSC8	FSC7	FSC6	FSC5	FSC4	FSC3	FSC2	FSC1	FSC0
		rw	rw	rw	rw	rw	rw	rw	rw	rw	rw	rw	rw	rw	rw

Bits 31:14 Reserved, must be kept at reset value.

Bits 13:0 **FSC*x***: Filter scale configuration
These bits define the scale configuration of Filters 13-0.
0: Dual 16-bit scale configuration
1: Single 32-bit scale configuration
Note: Bits 27:14 are available in connectivity line devices only and are reserved otherwise.

Note: Please refer to Figure 458: Filter bank scale configuration - register organization on page 1318.

CAN filter FIFO assignment register (CAN_FFA1R)

Address offset: 0x214
Reset value: 0x0000 0000

This register can be written only when the filter initialization mode is set (FINIT=1) in the CAN_FMR register.

31	30	29	28	27	26	25	24	23	22	21	20	19	18	17	16
Res.	Res.	Res.	Res.	Res.	Res.	Res.	Res.	Res.	Res.	Res.	Res.	Res.	Res.	Res.	Res.
15	14	13	12	11	10	9	8	7	6	5	4	3	2	1	0
Res.	Res.	FFA13	FFA12	FFA11	FFA10	FFA9	FFA8	FFA7	FFA6	FFA5	FFA4	FFA3	FFA2	FFA1	FFA0
		rw	rw	rw	rw	rw	rw	rw	rw	rw	rw	rw	rw	rw	rw

Bits 31:14 Reserved, must be kept at reset value.

Bits 13:0 **FFA*x***: Filter FIFO assignment for filter x

The message passing through this filter will be stored in the specified FIFO.
0: Filter assigned to FIFO 0
1: Filter assigned to FIFO 1

Note: Bits 27:14 are available in connectivity line devices only and are reserved otherwise.

CAN filter activation register (CAN_FA1R)

Address offset: 0x21C
Reset value: 0x0000 0000

31	30	29	28	27	26	25	24	23	22	21	20	19	18	17	16
Res.	Res.	Res.	Res.	Res.	Res.	Res.	Res.	Res.	Res.	Res.	Res.	Res.	Res.	Res.	Res.
15	14	13	12	11	10	9	8	7	6	5	4	3	2	1	0
Res.	Res.	FACT13	FACT12	FACT11	FACT10	FACT9	FACT8	FACT7	FACT6	FACT5	FACT4	FACT3	FACT2	FACT1	FACT0
		rw	rw	rw	rw	rw	rw	rw	rw	rw	rw	rw	rw	rw	rw

Bits 31:14 Reserved, must be kept at reset value.

Bits 13:0 **FACT*x***: Filter active

The software sets this bit to activate Filter x. To modify the Filter x registers (CAN_FxR[0:7]), the FACTx bit must be cleared or the FINIT bit of the CAN_FMR register must be set.
0: Filter x is not active
1: Filter x is active

Note: Bits 27:14 are available in connectivity line devices only and are reserved otherwise.

Filter bank i register x (CAN_FiRx) (i = 0..13, x = 1, 2)

Address offsets: 0x240 to 0x2AC
Reset value: 0xXXXX XXXX

There are 14 filter banks, i= 0 to 13. Each filter bank i is composed of two 32-bit registers, CAN_FiR[2:1].

This register can only be modified when the FACTx bit of the CAN_FAxR register is cleared or when the FINIT bit of the CAN_FMR register is set.

31	30	29	28	27	26	25	24	23	22	21	20	19	18	17	16
FB31	FB30	FB29	FB28	FB27	FB26	FB25	FB24	FB23	FB22	FB21	FB20	FB19	FB18	FB17	FB16
rw	rw	rw	rw	rw	rw	rw	rw	rw	rw	rw	rw	rw	rw	rw	rw
15	14	13	12	11	10	9	8	7	6	5	4	3	2	1	0
FB15	FB14	FB13	FB12	FB11	FB10	FB9	FB8	FB7	FB6	FB5	FB4	FB3	FB2	FB1	FB0
rw	rw	rw	rw	rw	rw	rw	rw	rw	rw	rw	rw	rw	rw	rw	rw

In all configurations:

Bits 31:0 **FB[31:0]**: Filter bits

Identifier

Each bit of the register specifies the level of the corresponding bit of the expected identifier.
0: Dominant bit is expected
1: Recessive bit is expected

Mask

Each bit of the register specifies whether the bit of the associated identifier register must match with the corresponding bit of the expected identifier or not.

0: Don't care, the bit is not used for the comparison

1: Must match, the bit of the incoming identifier must have the same level has specified in the corresponding identifier register of the filter.

Note: Depending on the scale and mode configuration of the filter the function of each register can differ. For the filter mapping, functions description and mask registers association, refer to Section 41.7.4: Identifier filtering on page 1316.

A Mask/Identifier register in **mask mode** has the same bit mapping as in **identifier list** mode.

For the register mapping/addresses of the filter banks please refer to the Table 220 on page 1347.

41.9.5 bxCAN register map

Refer to *Section 2.2.2 on page 62* for the register boundary addresses.

Table 220. bxCAN register map and reset values

Offset	Register	31	30	29	28	27	26	25	24	23	22	21	20	19	18	17	16	15	14	13	12	11	10	9	8	7	6	5	4	3	2	1	0
0x000	**CAN_MCR**	Res.	Res.	Res.	Res.	Res.	Res.	Res.	Res.	Res.	Res.	Res.	Res.	Res.	Res.	Res.	DBF	RESET	Res.	Res.	Res.	Res.	Res.	Res.	Res.	TTCM	ABOM	AWUM	NART	RFLM	TXFP	SLEEP	INRQ
	Reset value																1	0								0	0	0	0	0	0	1	0
0x004	**CAN_MSR**	Res.	Res.	Res.	Res.	Res.	Res.	Res.	Res.	Res.	Res.	Res.	Res.	Res.	Res.	Res.	Res.	Res.	Res.	Res.	Res.	RX	SAMP	RXM	TXM	Res.	Res.	Res.	SLAKI	WKUI	ERRI	SLAK	INAK
	Reset value																					1	1	0	0				0	0	0	1	0
0x008	**CAN_TSR**	LOW[2:0]			TME[2:0]			CODE[1:0]		ABRQ2	Res.	Res.	Res.	TERR2	ALST2	TXOK2	RQCP2	ABRQ1	Res.	Res.	Res.	TERR1	ALST1	TXOK1	RQCP1	ABRQ0	Res.	Res.	Res.	TERR0	ALST0	TXOK0	RQCP0
	Reset value	0	0	0	1	1	1	0	0	0				0	0	0	0	0				0	0	0	0	0				0	0	0	0
0x00C	**CAN_RF0R**	Res.	Res.	Res.	Res.	Res.	Res.	Res.	Res.	Res.	Res.	Res.	Res.	Res.	Res.	Res.	Res.	Res.	Res.	Res.	Res.	Res.	Res.	Res.	Res.	Res.	Res.	RFOM0	FOVR0	FULL0	Res.	FMP0[1:0]	
	Reset value																											0	0	0		0	0
0x010	**CAN_RF1R**	Res.	Res.	Res.	Res.	Res.	Res.	Res.	Res.	Res.	Res.	Res.	Res.	Res.	Res.	Res.	Res.	Res.	Res.	Res.	Res.	Res.	Res.	Res.	Res.	Res.	Res.	RFOM1	FOVR1	FULL1	Res.	FMP1[1:0]	
	Reset value																											0	0	0		0	0
0x014	**CAN_IER**	Res.	Res.	Res.	Res.	Res.	Res.	Res.	Res.	Res.	Res.	Res.	Res.	Res.	Res.	SLKIE	WKUIE	ERRIE	Res.	Res.	Res.	LECIE	BOFIE	EPVIE	EWGIE	Res.	FOVIE1	FFIE1	FMPIE1	FOVIE0	FFIE0	FMPIE0	TMEIE
	Reset value															0	0	0				0	0	0	0		0	0	0	0	0	0	0
0x018	**CAN_ESR**	REC[7:0]								TEC[7:0]								Res.	Res.	Res.	Res.	Res.	Res.	Res.	Res.	Res.	LEC[2:0]			Res.	BOFF	EPVF	EWGF
	Reset value	0	0	0	0	0	0	0	0	0	0	0	0	0	0	0	0										0	0	0		0	0	0
0x01C	**CAN_BTR**	SILM	LBKM	Res.	Res.	Res.	Res.	SJW[1:0]		Res.	TS2[2:0]			TS1[3:0]				Res.	Res.	Res.	Res.	Res.	Res.	BRP[9:0]									
	Reset value	0	0					0	0		0	1	0	0	0	1	1							0	0	0	0	0	0	0	0	0	0
0x020-0x17F		Res.	Res.	Res.	Res.	Res.	Res.	Res.	Res.	Res.	Res.	Res.	Res.	Res.	Res.	Res.	Res.	Res.	Res.	Res.	Res.	Res.	Res.	Res.	Res.	Res.	Res.	Res.	Res.	Res.	Res.	Res.	Res.
0x180	**CAN_TI0R**	STID[10:0]/EXID[28:18]											EXID[17:0]																		IDE	RTR	TXRQ
	Reset value	x	x	x	x	x	x	x	x	x	x	x	x	x	x	x	x	x	x	x	x	x	x	x	x	x	x	x	x	x	x	x	0

Table 220. bxCAN register map and reset values (continued)

Offset	Register	31	30	29	28	27	26	25	24	23	22	21	20	19	18	17	16	15	14	13	12	11	10	9	8	7	6	5	4	3	2	1	0
0x184	**CAN_TDT0R**	TIME[15:0]																Res.	Res.	Res.	Res.	Res.	Res.	Res.	TGT	Res.	Res.	Res.	Res.	DLC[3:0]			
	Reset value	x	x	x	x	x	x	x	x	x	x	x	x	x	x	x	x								x					x	x	x	x
0x188	**CAN_TDL0R**	DATA3[7:0]								DATA2[7:0]								DATA1[7:0]								DATA0[7:0]							
	Reset value	x	x	x	x	x	x	x	x	x	x	x	x	x	x	x	x	x	x	x	x	x	x	x	x	x	x	x	x	x	x	x	x
0x18C	**CAN_TDH0R**	DATA7[7:0]								DATA6[7:0]								DATA5[7:0]								DATA4[7:0]							
	Reset value	x	x	x	x	x	x	x	x	x	x	x	x	x	x	x	x	x	x	x	x	x	x	x	x	x	x	x	x	x	x	x	x
0x190	**CAN_TI1R**	STID[10:0]/EXID[28:18]											EXID[17:0]																		IDE	RTR	TXRQ
	Reset value	x	x	x	x	x	x	x	x	x	x	x	x	x	x	x	x	x	x	x	x	x	x	x	x	x	x	x	x	x	x	x	0
0x194	**CAN_TDT1R**	TIME[15:0]																Res.	Res.	Res.	Res.	Res.	Res.	Res.	TGT	Res.	Res.	Res.	Res.	DLC[3:0]			
	Reset value	x	x	x	x	x	x	x	x	x	x	x	x	x	x	x	x								x					x	x	x	x
0x198	**CAN_TDL1R**	DATA3[7:0]								DATA2[7:0]								DATA1[7:0]								DATA0[7:0]							
	Reset value	x	x	x	x	x	x	x	x	x	x	x	x	x	x	x	x	x	x	x	x	x	x	x	x	x	x	x	x	x	x	x	x
0x19C	**CAN_TDH1R**	DATA7[7:0]								DATA6[7:0]								DATA5[7:0]								DATA4[7:0]							
	Reset value	x	x	x	x	x	x	x	x	x	x	x	x	x	x	x	x	x	x	x	x	x	x	x	x	x	x	x	x	x	x	x	x
0x1A0	**CAN_TI2R**	STID[10:0]/EXID[28:18]											EXID[17:0]																		IDE	RTR	TXRQ
	Reset value	x	x	x	x	x	x	x	x	x	x	x	x	x	x	x	x	x	x	x	x	x	x	x	x	x	x	x	x	x	x	x	0
0x1A4	**CAN_TDT2R**	TIME[15:0]																Res.	Res.	Res.	Res.	Res.	Res.	Res.	TGT	Res.	Res.	Res.	Res.	DLC[3:0]			
	Reset value	x	x	x	x	x	x	x	x	x	x	x	x	x	x	x	x								x					x	x	x	x
0x1A8	**CAN_TDL2R**	DATA3[7:0]								DATA2[7:0]								DATA1[7:0]								DATA0[7:0]							
	Reset value	x	x	x	x	x	x	x	x	x	x	x	x	x	x	x	x	x	x	x	x	x	x	x	x	x	x	x	x	x	x	x	x
0x1AC	**CAN_TDH2R**	DATA7[7:0]								DATA6[7:0]								DATA5[7:0]								DATA4[7:0]							
	Reset value	x	x	x	x	x	x	x	x	x	x	x	x	x	x	x	x	x	x	x	x	x	x	x	x	x	x	x	x	x	x	x	x
0x1B0	**CAN_RI0R**	STID[10:0]/EXID[28:18]											EXID[17:0]																		IDE	RTR	Res.
	Reset value	x	x	x	x	x	x	x	x	x	x	x	x	x	x	x	x	x	x	x	x	x	x	x	x	x	x	x	x	x	x	x	

Table 220. bxCAN register map and reset values (continued)

Offset	Register	31	30	29	28	27	26	25	24	23	22	21	20	19	18	17	16	15	14	13	12	11	10	9	8	7	6	5	4	3	2	1	0
0x1B4	**CAN_RDT0R**	TIME[15:0]																FMI[7:0]								Res.	Res.	Res.	Res.	DLC[3:0]			
	Reset value	x	x	x	x	x	x	x	x	x	x	x	x	x	x	x	x	x	x	x	x	x	x	x	x					x	x	x	x
0x1B8	**CAN_RDL0R**	DATA3[7:0]								DATA2[7:0]								DATA1[7:0]								DATA0[7:0]							
	Reset value	x	x	x	x	x	x	x	x	x	x	x	x	x	x	x	x	x	x	x	x	x	x	x	x	x	x	x	x	x	x	x	x
0x1BC	**CAN_RDH0R**	DATA7[7:0]								DATA6[7:0]								DATA5[7:0]								DATA4[7:0]							
	Reset value	x	x	x	x	x	x	x	x	x	x	x	x	x	x	x	x	x	x	x	x	x	x	x	x	x	x	x	x	x	x	x	x
0x1C0	**CAN_RI1R**	STID[10:0]/EXID[28:18]											EXID[17:0]																		IDE	RTR	Res.
	Reset value	x	x	x	x	x	x	x	x	x	x	x	x	x	x	x	x	x	x	x	x	x	x	x	x	x	x	x	x	x	x	x	
0x1C4	**CAN_RDT1R**	TIME[15:0]																FMI[7:0]								Res.	Res.	Res.	Res.	DLC[3:0]			
	Reset value	x	x	x	x	x	x	x	x	x	x	x	x	x	x	x	x	x	x	x	x	x	x	x	x					x	x	x	x
0x1C8	**CAN_RDL1R**	DATA3[7:0]								DATA2[7:0]								DATA1[7:0]								DATA0[7:0]							
	Reset value	x	x	x	x	x	x	x	x	x	x	x	x	x	x	x	x	x	x	x	x	x	x	x	x	x	x	x	x	x	x	x	x
0x1CC	**CAN_RDH1R**	DATA7[7:0]								DATA6[7:0]								DATA5[7:0]								DATA4[7:0]							
	Reset value	x	x	x	x	x	x	x	x	x	x	x	x	x	x	x	x	x	x	x	x	x	x	x	x	x	x	x	x	x	x	x	x
0x1D0-0x1FF		Res.	Res.	Res.	Res.	Res.	Res.	Res.	Res.	Res.	Res.	Res.	Res.	Res.	Res.	Res.	Res.	Res.	Res.	Res.	Res.	Res.	Res.	Res.	Res.	Res.	Res.	Res.	Res.	Res.	Res.	Res.	Res.
0x200	**CAN_FMR**	Res.	Res.	Res.	Res.	Res.	Res.	Res.	Res.	Res.	Res.	Res.	Res.	Res.	Res.	Res.	Res.	Res.	Res.	Res.	Res.	Res.	Res.	Res.	Res.	Res.	Res.	Res.	Res.	Res.	Res.	Res.	FINIT
	Reset value																																1
0x204	**CAN_FM1R**	Res.	Res.	Res.	Res.	Res.	Res.	Res.	Res.	Res.	Res.	Res.	Res.	Res.	Res.	Res.	Res.	Res.	Res.	FBM[13:0]													
	Reset value																			0	0	0	0	0	0	0	0	0	0	0	0	0	0
0x208		Res.	Res.	Res.	Res.	Res.	Res.	Res.	Res.	Res.	Res.	Res.	Res.	Res.	Res.	Res.	Res.	Res.	Res.	Res.	Res.	Res.	Res.	Res.	Res.	Res.	Res.	Res.	Res.	Res.	Res.	Res.	Res.
0x20C	**CAN_FS1R**	Res.	Res.	Res.	Res.	Res.	Res.	Res.	Res.	Res.	Res.	Res.	Res.	Res.	Res.	Res.	Res.	Res.	Res.	FSC[13:0]													
	Reset value																			0	0	0	0	0	0	0	0	0	0	0	0	0	0
0x210		Res.	Res.	Res.	Res.	Res.	Res.	Res.	Res.	Res.	Res.	Res.	Res.	Res.	Res.	Res.	Res.	Res.	Res.	Res.	Res.	Res.	Res.	Res.	Res.	Res.	Res.	Res.	Res.	Res.	Res.	Res.	Res.
0x214	**CAN_FFA1R**	Res.	Res.	Res.	Res.	Res.	Res.	Res.	Res.	Res.	Res.	Res.	Res.	Res.	Res.	Res.	Res.	Res.	Res.	FFA[13:0]													
	Reset value																			0	0	0	0	0	0	0	0	0	0	0	0	0	0

Table 220. bxCAN register map and reset values (continued)

Offset	Register	31	30	29	28	27	26	25	24	23	22	21	20	19	18	17	16	15	14	13	12	11	10	9	8	7	6	5	4	3	2	1	0
0x218		Res.	Res.	Res.	Res.	Res.	Res.	Res.	Res.	Res.	Res.	Res.	Res.	Res.	Res.	Res.	Res.	Res.	Res.	Res.	Res.	Res.	Res.	Res.	Res.	Res.	Res.	Res.	Res.	Res.	Res.	Res.	Res.
0x21C	**CAN_FA1R**	Res.	Res.	Res.	Res.	Res.	Res.	Res.	Res.	Res.	Res.	Res.	Res.	Res.	Res.	Res.	Res.	Res.	Res.	FACT[13:0]													
	Reset value																			0	0	0	0	0	0	0	0	0	0	0	0	0	0
0x220		Res.	Res.	Res.	Res.	Res.	Res.	Res.	Res.	Res.	Res.	Res.	Res.	Res.	Res.	Res.	Res.	Res.	Res.	Res.	Res.	Res.	Res.	Res.	Res.	Res.	Res.	Res.	Res.	Res.	Res.	Res.	Res.
0x224-0x23F		Res.	Res.	Res.	Res.	Res.	Res.	Res.	Res.	Res.	Res.	Res.	Res.	Res.	Res.	Res.	Res.	Res.	Res.	Res.	Res.	Res.	Res.	Res.	Res.	Res.	Res.	Res.	Res.	Res.	Res.	Res.	Res.
0x240	**CAN_F0R1**	FB[31:0]																															
	Reset value	x	x	x	x	x	x	x	x	x	x	x	x	x	x	x	x	x	x	x	x	x	x	x	x	x	x	x	x	x	x	x	x
0x244	**CAN_F0R2**	FB[31:0]																															
	Reset value	x	x	x	x	x	x	x	x	x	x	x	x	x	x	x	x	x	x	x	x	x	x	x	x	x	x	x	x	x	x	x	x
0x248	**CAN_F1R1**	FB[31:0]																															
	Reset value	x	x	x	x	x	x	x	x	x	x	x	x	x	x	x	x	x	x	x	x	x	x	x	x	x	x	x	x	x	x	x	x
0x24C	**CAN_F1R2**	FB[31:0]																															
	Reset value	x	x	x	x	x	x	x	x	x	x	x	x	x	x	x	x	x	x	x	x	x	x	x	x	x	x	x	x	x	x	x	x
. . . .	. . . .	. . . .																															
0x318	**CAN_F27R1**	FB[31:0]																															
	Reset value	x	x	x	x	x	x	x	x	x	x	x	x	x	x	x	x	x	x	x	x	x	x	x	x	x	x	x	x	x	x	x	x
0x31C	**CAN_F27R2**	FB[31:0]																															
	Reset value	x	x	x	x	x	x	x	x	x	x	x	x	x	x	x	x	x	x	x	x	x	x	x	x	x	x	x	x	x	x	x	x

42 Universal serial bus full-speed device interface (USB)

This section does not apply to STM32L431xx devices.

42.1 Introduction

The USB peripheral implements an interface between a full-speed USB 2.0 bus and the APB bus.

USB suspend/resume are supported which allows to stop the device clocks for low-power consumption.

42.2 USB main features

- USB specification version 2.0 full-speed compliant
- Configurable number of endpoints from 1 to 8
- Up to 1024 bytes of dedicated packet buffer memory SRAM
- Cyclic redundancy check (CRC) generation/checking, Non-return-to-zero Inverted (NRZI) encoding/decoding and bit-stuffing
- Isochronous transfers support
- Double-buffered bulk/isochronous endpoint support
- USB Suspend/Resume operations
- Frame locked clock pulse generation
- USB 2.0 Link Power Management support
- Battery Charging Specification Revision 1.2 support
- USB connect / disconnect capability (controllable embedded pull-up resistor on USB_DP line)

42.3 USB implementation

Table 221 describes the USB implementation in the devices.

Table 221. STM32L433/443 USB implementation

USB features[1]	-
	USB
Number of endpoints	8
Size of dedicated packet buffer memory SRAM	1024 bytes
Dedicated packet buffer memory SRAM access scheme	2 x 16 bits / word
USB 2.0 Link Power Management (LPM) support	X
Battery Charging Detection (BCD) support	X
Embedded pull-up resistor on USB_DP line	X

1. X= supported

42.4 USB functional description

Figure 466 shows the block diagram of the USB peripheral.

Figure 466. USB peripheral block diagram

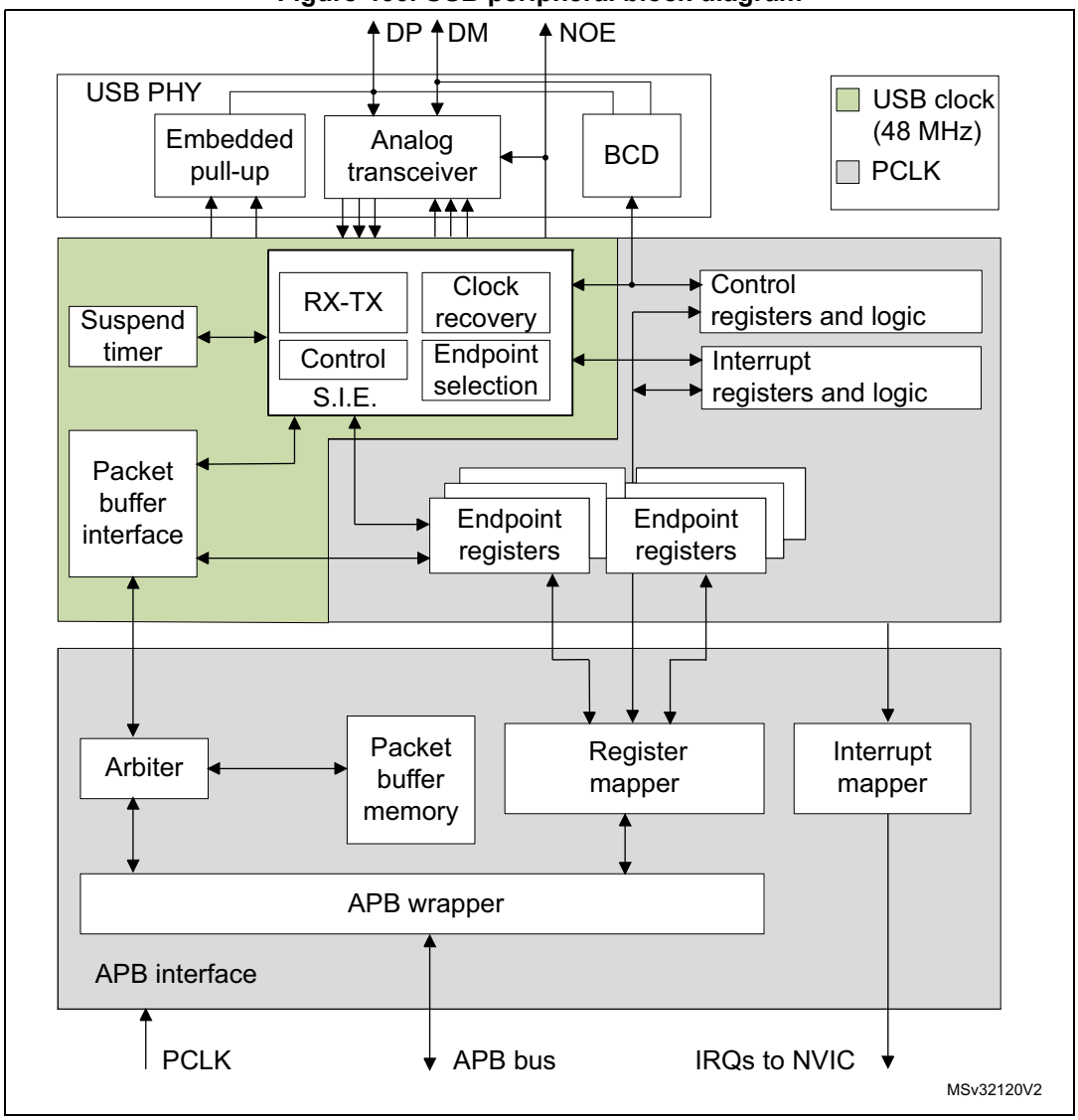

The USB peripheral provides an USB-compliant connection between the host PC and the function implemented by the microcontroller. Data transfer between the host PC and the system memory occurs through a dedicated packet buffer memory accessed directly by the USB peripheral. This dedicated memory size is up to 1024 bytes, and up to 16 mono-directional or 8 bidirectional endpoints can be used. The USB peripheral interfaces with the USB host, detecting token packets, handling data transmission/reception, and processing handshake packets as required by the USB standard. Transaction formatting is performed by the hardware, including CRC generation and checking.

Each endpoint is associated with a buffer description block indicating where the endpoint-related memory area is located, how large it is or how many bytes must be transmitted. When a token for a valid function/endpoint pair is recognized by the USB peripheral, the related data transfer (if required and if the endpoint is configured) takes place. The data

buffered by the USB peripheral is loaded in an internal 16-bit register and memory access to the dedicated buffer is performed. When all the data has been transferred, if needed, the proper handshake packet over the USB is generated or expected according to the direction of the transfer.

At the end of the transaction, an endpoint-specific interrupt is generated, reading status registers and/or using different interrupt response routines. The microcontroller can determine:

- which endpoint has to be served,
- which type of transaction took place, if errors occurred (bit stuffing, format, CRC, protocol, missing ACK, over/underrun, etc.).

Special support is offered to isochronous transfers and high throughput bulk transfers, implementing a double buffer usage, which allows to always have an available buffer for the USB peripheral while the microcontroller uses the other one.

The unit can be placed in low-power mode (SUSPEND mode), by writing in the control register, whenever required. At this time, all static power dissipation is avoided, and the USB clock can be slowed down or stopped. The detection of activity at the USB inputs, while in low-power mode, wakes the device up asynchronously. A special interrupt source can be connected directly to a wakeup line to allow the system to immediately restart the normal clock generation and/or support direct clock start/stop.

42.4.1 Description of USB blocks

The USB peripheral implements all the features related to USB interfacing, which include the following blocks:

- USB Physical Interface (USB PHY): This block is maintaining the electrical interface to an external USB host. It contains the differential analog transceiver itself, controllable embedded pull-up resistor (connected to USB_DP line) and support for Battery Charging Detection (BCD), multiplexed on same USB_DP and USB_DM lines. The output enable control signal of the analog transceiver (active low) is provided externally on USB_NOE. It can be used to drive some activity LED or to provide information about the actual communication direction to some other circuitry.
- Serial Interface Engine (SIE): The functions of this block include: synchronization pattern recognition, bit-stuffing, CRC generation and checking, PID verification/generation, and handshake evaluation. It must interface with the USB transceivers and uses the virtual buffers provided by the packet buffer interface for local data storage. This unit also generates signals according to USB peripheral events, such as Start of Frame (SOF), USB_Reset, Data errors etc. and to Endpoint related events like end of transmission or correct reception of a packet; these signals are then used to generate interrupts.
- Timer: This block generates a start-of-frame locked clock pulse and detects a global suspend (from the host) when no traffic has been received for 3 ms.
- Packet Buffer Interface: This block manages the local memory implementing a set of buffers in a flexible way, both for transmission and reception. It can choose the proper buffer according to requests coming from the SIE and locate them in the memory addresses pointed by the Endpoint registers. It increments the address after each exchanged byte until the end of packet, keeping track of the number of exchanged bytes and preventing the buffer to overrun the maximum capacity.

- Endpoint-Related Registers: Each endpoint has an associated register containing the endpoint type and its current status. For mono-directional/single-buffer endpoints, a single register can be used to implement two distinct endpoints. The number of registers is 8, allowing up to 16 mono-directional/single-buffer or up to 7 double-buffer endpoints in any combination. For example the USB peripheral can be programmed to have 4 double buffer endpoints and 8 single-buffer/mono-directional endpoints.
- Control Registers: These are the registers containing information about the status of the whole USB peripheral and used to force some USB events, such as resume and power-down.
- Interrupt Registers: These contain the Interrupt masks and a record of the events. They can be used to inquire an interrupt reason, the interrupt status or to clear the status of a pending interrupt.

*Note: * Endpoint 0 is always used for control transfer in single-buffer mode.*

The USB peripheral is connected to the APB bus through an APB interface, containing the following blocks:

- Packet Memory: This is the local memory that physically contains the Packet Buffers. It can be used by the Packet Buffer interface, which creates the data structure and can be accessed directly by the application software. The size of the Packet Memory is up to 1024 bytes, structured as 512 half-words by 16 bits.
- Arbiter: This block accepts memory requests coming from the APB bus and from the USB interface. It resolves the conflicts by giving priority to APB accesses, while always reserving half of the memory bandwidth to complete all USB transfers. This time-duplex scheme implements a virtual dual-port SRAM that allows memory access, while an USB transaction is happening. Multiword APB transfers of any length are also allowed by this scheme.
- Register Mapper: This block collects the various byte-wide and bit-wide registers of the USB peripheral in a structured 16-bit wide half-word set addressed by the APB.
- APB Wrapper: This provides an interface to the APB for the memory and register. It also maps the whole USB peripheral in the APB address space.
- Interrupt Mapper: This block is used to select how the possible USB events can generate interrupts and map them to the NVIC.

42.5 Programming considerations

In the following sections, the expected interactions between the USB peripheral and the application program are described, in order to ease application software development.

42.5.1 Generic USB device programming

This part describes the main tasks required of the application software in order to obtain USB compliant behavior. The actions related to the most general USB events are taken into account and paragraphs are dedicated to the special cases of double-buffered endpoints and Isochronous transfers. Apart from system reset, action is always initiated by the USB peripheral, driven by one of the USB events described below.

42.5.2 System and power-on reset

Upon system and power-on reset, the first operation the application software should perform is to provide all required clock signals to the USB peripheral and subsequently de-assert its reset signal so to be able to access its registers. The whole initialization sequence is hereafter described.

As a first step application software needs to activate register macrocell clock and de-assert macrocell specific reset signal using related control bits provided by device clock management logic.

After that, the analog part of the device related to the USB transceiver must be switched on using the PDWN bit in CNTR register, which requires a special handling. This bit is intended to switch on the internal voltage references that supply the port transceiver. This circuit has a defined startup time ($t_{STARTUP}$ specified in the datasheet) during which the behavior of the USB transceiver is not defined. It is thus necessary to wait this time, after setting the PDWN bit in the CNTR register, before removing the reset condition on the USB part (by clearing the FRES bit in the CNTR register). Clearing the ISTR register then removes any spurious pending interrupt before any other macrocell operation is enabled.

At system reset, the microcontroller must initialize all required registers and the packet buffer description table, to make the USB peripheral able to properly generate interrupts and data transfers. All registers not specific to any endpoint must be initialized according to the needs of application software (choice of enabled interrupts, chosen address of packet buffers, etc.). Then the process continues as for the USB reset case (see further paragraph).

USB reset (RESET interrupt)

When this event occurs, the USB peripheral is put in the same conditions it is left by the system reset after the initialization described in the previous paragraph: communication is disabled in all endpoint registers (the USB peripheral will not respond to any packet). As a response to the USB reset event, the USB function must be enabled, having as USB address 0, implementing only the default control endpoint (endpoint address is 0 too). This is accomplished by setting the Enable Function (EF) bit of the USB_DADDR register and initializing the EP0R register and its related packet buffers accordingly. During USB enumeration process, the host assigns a unique address to this device, which must be written in the ADD[6:0] bits of the USB_DADDR register, and configures any other necessary endpoint.

When a RESET interrupt is received, the application software is responsible to enable again the default endpoint of USB function 0 within 10 ms from the end of reset sequence which triggered the interrupt.

Structure and usage of packet buffers

Each bidirectional endpoint may receive or transmit data from/to the host. The received data is stored in a dedicated memory buffer reserved for that endpoint, while another memory buffer contains the data to be transmitted by the endpoint. Access to this memory is performed by the packet buffer interface block, which delivers a memory access request and waits for its acknowledgment. Since the packet buffer memory has to be accessed by the microcontroller also, an arbitration logic takes care of the access conflicts, using half APB cycle for microcontroller access and the remaining half for the USB peripheral access. In this way, both the agents can operate as if the packet memory is a dual-port SRAM, without being aware of any conflict even when the microcontroller is performing back-to-

back accesses. The USB peripheral logic uses a dedicated clock. The frequency of this dedicated clock is fixed by the requirements of the USB standard at 48 MHz, and this can be different from the clock used for the interface to the APB bus. Different clock configurations are possible where the APB clock frequency can be higher or lower than the USB peripheral one.

Note: Due to USB data rate and packet memory interface requirements, the APB *clock must have a minimum frequency of 10 MHz to avoid data overrun/underrun problems.*

Each endpoint is associated with two packet buffers (usually one for transmission and the other one for reception). Buffers can be placed anywhere inside the packet memory because their location and size is specified in a buffer description table, which is also located in the packet memory at the address indicated by the USB_BTABLE register. Each table entry is associated to an endpoint register and it is composed of four 16-bit half-words so that table start address must always be aligned to an 8-byte boundary (the lowest three bits of USB_BTABLE register are always “000”). Buffer descriptor table entries are described in the *Section 42.6.2: Buffer descriptor table*. If an endpoint is unidirectional and it is neither an Isochronous nor a double-buffered bulk, only one packet buffer is required (the one related to the supported transfer direction). Other table locations related to unsupported transfer directions or unused endpoints, are available to the user. Isochronous and double-buffered bulk endpoints have special handling of packet buffers (Refer to *Section 42.5.4: Isochronous transfers* and *Section 42.5.3: Double-buffered endpoints* respectively). The relationship between buffer description table entries and packet buffer areas is depicted in *Figure 467*.

Figure 467. Packet buffer areas with examples of buffer description table locations

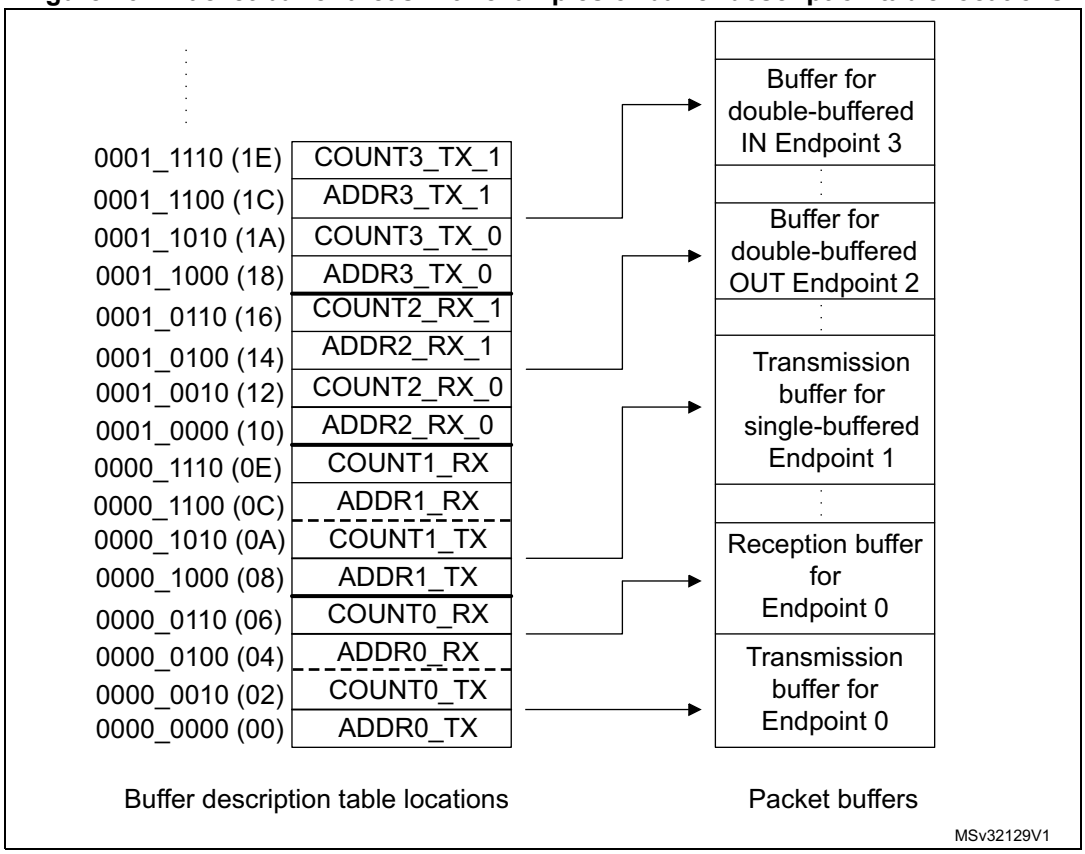

Each packet buffer is used either during reception or transmission starting from the bottom. The USB peripheral will never change the contents of memory locations adjacent to the allocated memory buffers; if a packet bigger than the allocated buffer length is received (buffer overrun condition) the data will be copied to the memory only up to the last available location.

Endpoint initialization

The first step to initialize an endpoint is to write appropriate values to the ADDRn_TX/ADDRn_RX registers so that the USB peripheral finds the data to be transmitted already available and the data to be received can be buffered. The EP_TYPE bits in the USB_EPnR register must be set according to the endpoint type, eventually using the EP_KIND bit to enable any special required feature. On the transmit side, the endpoint must be enabled using the STAT_TX bits in the USB_EPnR register and COUNTn_TX must be initialized. For reception, STAT_RX bits must be set to enable reception and COUNTn_RX must be written with the allocated buffer size using the BL_SIZE and NUM_BLOCK fields. Unidirectional endpoints, except Isochronous and double-buffered bulk endpoints, need to initialize only bits and registers related to the supported direction. Once the transmission and/or reception are enabled, register USB_EPnR and locations ADDRn_TX/ADDRn_RX, COUNTn_TX/COUNTn_RX (respectively), should not be modified by the application software, as the hardware can change their value on the fly. When the data transfer operation is completed, notified by a CTR interrupt event, they can be accessed again to re-enable a new operation.

IN packets (data transmission)

When receiving an IN token packet, if the received address matches a configured and valid endpoint, the USB peripheral accesses the contents of ADDRn_TX and COUNTn_TX locations inside the buffer descriptor table entry related to the addressed endpoint. The content of these locations is stored in its internal 16 bit registers ADDR and COUNT (not accessible by software). The packet memory is accessed again to read the first byte to be transmitted (Refer to *Structure and usage of packet buffers on page 1355*) and starts sending a DATA0 or DATA1 PID according to USB_EPnR bit DTOG_TX. When the PID is completed, the first byte, read from buffer memory, is loaded into the output shift register to be transmitted on the USB bus. After the last data byte is transmitted, the computed CRC is sent. If the addressed endpoint is not valid, a NAK or STALL handshake packet is sent instead of the data packet, according to STAT_TX bits in the USB_EPnR register.

The ADDR internal register is used as a pointer to the current buffer memory location while COUNT is used to count the number of remaining bytes to be transmitted. Each half-word read from the packet buffer memory is transmitted over the USB bus starting from the least significant byte. Transmission buffer memory is read starting from the address pointed by ADDRn_TX for COUNTn_TX/2 half-words. If a transmitted packet is composed of an odd number of bytes, only the lower half of the last half-word accessed will be used.

On receiving the ACK receipt by the host, the USB_EPnR register is updated in the following way: DTOG_TX bit is toggled, the endpoint is made invalid by setting STAT_TX=10 (NAK) and bit CTR_TX is set. The application software must first identify the endpoint, which is requesting microcontroller attention by examining the EP_ID and DIR bits in the USB_ISTR register. Servicing of the CTR_TX event starts clearing the interrupt bit; the application software then prepares another buffer full of data to be sent, updates the COUNTn_TX table location with the number of byte to be transmitted during the next transfer, and finally sets STAT_TX to ‘11 (VALID) to re-enable transmissions. While the STAT_TX bits are equal to ‘10 (NAK), any IN request addressed to that endpoint is NAKed,

indicating a flow control condition: the USB host will retry the transaction until it succeeds. It is mandatory to execute the sequence of operations in the above mentioned order to avoid losing the notification of a second IN transaction addressed to the same endpoint immediately following the one which triggered the CTR interrupt.

OUT and SETUP packets (data reception)

These two tokens are handled by the USB peripheral more or less in the same way; the differences in the handling of SETUP packets are detailed in the following paragraph about control transfers. When receiving an OUT/SETUP PID, if the address matches a valid endpoint, the USB peripheral accesses the contents of the ADDRn_RX and COUNTn_RX locations inside the buffer descriptor table entry related to the addressed endpoint. The content of the ADDRn_RX is stored directly in its internal register ADDR. While COUNT is now reset and the values of BL_SIZE and NUM_BLOCK bit fields, which are read within COUNTn_RX content are used to initialize BUF_COUNT, an internal 16 bit counter, which is used to check the buffer overrun condition (all these internal registers are not accessible by software). Data bytes subsequently received by the USB peripheral are packed in half-words (the first byte received is stored as least significant byte) and then transferred to the packet buffer starting from the address contained in the internal ADDR register while BUF_COUNT is decremented and COUNT is incremented at each byte transfer. When the end of DATA packet is detected, the correctness of the received CRC is tested and only if no errors occurred during the reception, an ACK handshake packet is sent back to the transmitting host.

In case of wrong CRC or other kinds of errors (bit-stuff violations, frame errors, etc.), data bytes are still copied in the packet memory buffer, at least until the error detection point, but ACK packet is not sent and the ERR bit in USB_ISTR register is set. However, there is usually no software action required in this case: the USB peripheral recovers from reception errors and remains ready for the next transaction to come. If the addressed endpoint is not valid, a NAK or STALL handshake packet is sent instead of the ACK, according to bits STAT_RX in the USB_EPnR register and no data is written in the reception memory buffers.

Reception memory buffer locations are written starting from the address contained in the ADDRn_RX for a number of bytes corresponding to the received data packet length, CRC included (i.e. data payload length + 2), or up to the last allocated memory location, as defined by BL_SIZE and NUM_BLOCK, whichever comes first. In this way, the USB peripheral never writes beyond the end of the allocated reception memory buffer area. If the length of the data packet payload (actual number of bytes used by the application) is greater than the allocated buffer, the USB peripheral detects a buffer overrun condition. in this case, a STALL handshake is sent instead of the usual ACK to notify the problem to the host, no interrupt is generated and the transaction is considered failed.

When the transaction is completed correctly, by sending the ACK handshake packet, the internal COUNT register is copied back in the COUNTn_RX location inside the buffer description table entry, leaving unaffected BL_SIZE and NUM_BLOCK fields, which normally do not require to be re-written, and the USB_EPnR register is updated in the following way: DTOG_RX bit is toggled, the endpoint is made invalid by setting STAT_RX = ‘10 (NAK) and bit CTR_RX is set. If the transaction has failed due to errors or buffer overrun condition, none of the previously listed actions take place. The application software must first identify the endpoint, which is requesting microcontroller attention by examining the EP_ID and DIR bits in the USB_ISTR register. The CTR_RX event is serviced by first determining the transaction type (SETUP bit in the USB_EPnR register); the application software must clear the interrupt flag bit and get the number of received bytes reading the COUNTn_RX location inside the buffer description table entry related to the endpoint being

processed. After the received data is processed, the application software should set the STAT_RX bits to ‘11 (Valid) in the USB_EPnR, enabling further transactions. While the STAT_RX bits are equal to ‘10 (NAK), any OUT request addressed to that endpoint is NAKed, indicating a flow control condition: the USB host will retry the transaction until it succeeds. It is mandatory to execute the sequence of operations in the above mentioned order to avoid losing the notification of a second OUT transaction addressed to the same endpoint following immediately the one which triggered the CTR interrupt.

Control transfers

Control transfers are made of a SETUP transaction, followed by zero or more data stages, all of the same direction, followed by a status stage (a zero-byte transfer in the opposite direction). SETUP transactions are handled by control endpoints only and are very similar to OUT ones (data reception) except that the values of DTOG_TX and DTOG_RX bits of the addressed endpoint registers are set to 1 and 0 respectively, to initialize the control transfer, and both STAT_TX and STAT_RX are set to ‘10 (NAK) to let software decide if subsequent transactions must be IN or OUT depending on the SETUP contents. A control endpoint must check SETUP bit in the USB_EPnR register at each CTR_RX event to distinguish normal OUT transactions from SETUP ones. A USB device can determine the number and direction of data stages by interpreting the data transferred in the SETUP stage, and is required to STALL the transaction in the case of errors. To do so, at all data stages before the last, the unused direction should be set to STALL, so that, if the host reverses the transfer direction too soon, it gets a STALL as a status stage.

While enabling the last data stage, the opposite direction should be set to NAK, so that, if the host reverses the transfer direction (to perform the status stage) immediately, it is kept waiting for the completion of the control operation. If the control operation completes successfully, the software will change NAK to VALID, otherwise to STALL. At the same time, if the status stage will be an OUT, the STATUS_OUT (EP_KIND in the USB_EPnR register) bit should be set, so that an error is generated if a status transaction is performed with not-zero data. When the status transaction is serviced, the application clears the STATUS_OUT bit and sets STAT_RX to VALID (to accept a new command) and STAT_TX to NAK (to delay a possible status stage immediately following the next setup).

Since the USB specification states that a SETUP packet cannot be answered with a handshake different from ACK, eventually aborting a previously issued command to start the new one, the USB logic doesn’t allow a control endpoint to answer with a NAK or STALL packet to a SETUP token received from the host.

When the STAT_RX bits are set to ‘01 (STALL) or ‘10 (NAK) and a SETUP token is received, the USB accepts the data, performing the required data transfers and sends back an ACK handshake. If that endpoint has a previously issued CTR_RX request not yet acknowledged by the application (i.e. CTR_RX bit is still set from a previously completed reception), the USB discards the SETUP transaction and does not answer with any handshake packet regardless of its state, simulating a reception error and forcing the host to send the SETUP token again. This is done to avoid losing the notification of a SETUP transaction addressed to the same endpoint immediately following the transaction, which triggered the CTR_RX interrupt.

42.5.3 Double-buffered endpoints

All different endpoint types defined by the USB standard represent different traffic models, and describe the typical requirements of different kind of data transfer operations. When large portions of data are to be transferred between the host PC and the USB function, the bulk endpoint type is the most suited model. This is because the host schedules bulk transactions so as to fill all the available bandwidth in the frame, maximizing the actual transfer rate as long as the USB function is ready to handle a bulk transaction addressed to it. If the USB function is still busy with the previous transaction when the next one arrives, it will answer with a NAK handshake and the host PC will issue the same transaction again until the USB function is ready to handle it, reducing the actual transfer rate due to the bandwidth occupied by re-transmissions. For this reason, a dedicated feature called ‘double-buffering’ can be used with bulk endpoints.

When ‘double-buffering’ is activated, data toggle sequencing is used to select, which buffer is to be used by the USB peripheral to perform the required data transfers, using both ‘transmission’ and ‘reception’ packet memory areas to manage buffer swapping on each successful transaction in order to always have a complete buffer to be used by the application, while the USB peripheral fills the other one. For example, during an OUT transaction directed to a ‘reception’ double-buffered bulk endpoint, while one buffer is being filled with new data coming from the USB host, the other one is available for the microcontroller software usage (the same would happen with a ‘transmission’ double-buffered bulk endpoint and an IN transaction).

Since the swapped buffer management requires the usage of all 4 buffer description table locations hosting the address pointer and the length of the allocated memory buffers, the USB_EPnR registers used to implement double-buffered bulk endpoints are forced to be used as unidirectional ones. Therefore, only one STAT bit pair must be set at a value different from ‘00 (Disabled): STAT_RX if the double-buffered bulk endpoint is enabled for reception, STAT_TX if the double-buffered bulk endpoint is enabled for transmission. In case it is required to have double-buffered bulk endpoints enabled both for reception and transmission, two USB_EPnR registers must be used.

To exploit the double-buffering feature and reach the highest possible transfer rate, the endpoint flow control structure, described in previous chapters, has to be modified, in order to switch the endpoint status to NAK only when a buffer conflict occurs between the USB peripheral and application software, instead of doing it at the end of each successful transaction. The memory buffer which is currently being used by the USB peripheral is defined by the DTOG bit related to the endpoint direction: DTOG_RX (bit 14 of USB_EPnR register) for ‘reception’ double-buffered bulk endpoints or DTOG_TX (bit 6 of USB_EPnR register) for ‘transmission’ double-buffered bulk endpoints. To implement the new flow control scheme, the USB peripheral should know which packet buffer is currently in use by the application software, so to be aware of any conflict. Since in the USB_EPnR register, there are two DTOG bits but only one is used by USB peripheral for data and buffer sequencing (due to the unidirectional constraint required by double-buffering feature) the other one can be used by the application software to show which buffer it is currently using. This new buffer flag is called SW_BUF. In the following table the correspondence between USB_EPnR register bits and DTOG/SW_BUF definition is explained, for the cases of ‘transmission’ and ‘reception’ double-buffered bulk endpoints.

Table 222. Double-buffering buffer flag definition

Buffer flag	'Transmission' endpoint	'Reception' endpoint
DTOG	DTOG_TX (USB_EPnR bit 6)	DTOG_RX (USB_EPnR bit 14)
SW_BUF	USB_EPnR bit 14	USB_EPnR bit 6

The memory buffer which is currently being used by the USB peripheral is defined by DTOG buffer flag, while the buffer currently in use by application software is identified by SW_BUF buffer flag. The relationship between the buffer flag value and the used packet buffer is the same in both cases, and it is listed in the following table.

Table 223. Bulk double-buffering memory buffers usage

Endpoint Type	DTOG	SW_BUF	Packet buffer used by USB Peripheral	Packet buffer used by Application Software
IN	0	1	ADDRn_TX_0 / COUNTn_TX_0 Buffer description table locations.	ADDRn_TX_1 / COUNTn_TX_1 Buffer description table locations.
	1	0	ADDRn_TX_1 / COUNTn_TX_1 Buffer description table locations	ADDRn_TX_0 / COUNTn_TX_0 Buffer description table locations.
	0	0	None (1)	ADDRn_TX_0 / COUNTn_TX_0 Buffer description table locations.
	1	1	None (1)	ADDRn_TX_0 / COUNTn_TX_0 Buffer description table locations.
OUT	0	1	ADDRn_RX_0 / COUNTn_RX_0 Buffer description table locations.	ADDRn_RX_1 / COUNTn_RX_1 Buffer description table locations.
	1	0	ADDRn_RX_1 / COUNTn_RX_1 Buffer description table locations.	ADDRn_RX_0 / COUNTn_RX_0 Buffer description table locations.
	0	0	None (1)	ADDRn_RX_0 / COUNTn_RX_0 Buffer description table locations.
	1	1	None (1)	ADDRn_RX_1 / COUNTn_RX_1 Buffer description table locations.

1. Endpoint in NAK Status.

Double-buffering feature for a bulk endpoint is activated by:

- Writing EP_TYPE bit field at '00 in its USB_EPnR register, to define the endpoint as a bulk, and
- Setting EP_KIND bit at '1 (DBL_BUF), in the same register.

The application software is responsible for DTOG and SW_BUF bits initialization according to the first buffer to be used; this has to be done considering the special toggle-only property that these two bits have. The end of the first transaction occurring after having set DBL_BUF, triggers the special flow control of double-buffered bulk endpoints, which is used for all other transactions addressed to this endpoint until DBL_BUF remain set. At the end of each transaction the CTR_RX or CTR_TX bit of the addressed endpoint USB_EPnR register is set, depending on the enabled direction. At the same time, the affected DTOG bit in the USB_EPnR register is hardware toggled making the USB peripheral buffer swapping completely software independent. Unlike common transactions, and the first one after

DBL_BUF setting, STAT bit pair is not affected by the transaction termination and its value remains ‘11 (Valid). However, as the token packet of a new transaction is received, the actual endpoint status will be masked as ‘10 (NAK) when a buffer conflict between the USB peripheral and the application software is detected (this condition is identified by DTOG and SW_BUF having the same value, see *Table 223 on page 1361*). The application software responds to the CTR event notification by clearing the interrupt flag and starting any required handling of the completed transaction. When the application packet buffer usage is over, the software toggles the SW_BUF bit, writing ‘1 to it, to notify the USB peripheral about the availability of that buffer. In this way, the number of NAKed transactions is limited only by the application elaboration time of a transaction data: if the elaboration time is shorter than the time required to complete a transaction on the USB bus, no re-transmissions due to flow control will take place and the actual transfer rate will be limited only by the host PC.

The application software can always override the special flow control implemented for double-buffered bulk endpoints, writing an explicit status different from ‘11 (Valid) into the STAT bit pair of the related USB_EPnR register. In this case, the USB peripheral will always use the programmed endpoint status, regardless of the buffer usage condition.

42.5.4 Isochronous transfers

The USB standard supports full speed peripherals requiring a fixed and accurate data production/consume frequency, defining this kind of traffic as ‘Isochronous’. Typical examples of this data are: audio samples, compressed video streams, and in general any sort of sampled data having strict requirements for the accuracy of delivered frequency. When an endpoint is defined to be ‘isochronous’ during the enumeration phase, the host allocates in the frame the required bandwidth and delivers exactly one IN or OUT packet each frame, depending on endpoint direction. To limit the bandwidth requirements, no re-transmission of failed transactions is possible for Isochronous traffic; this leads to the fact that an isochronous transaction does not have a handshake phase and no ACK packet is expected or sent after the data packet. For the same reason, Isochronous transfers do not support data toggle sequencing and always use DATA0 PID to start any data packet.

The Isochronous behavior for an endpoint is selected by setting the EP_TYPE bits at ‘10 in its USB_EPnR register; since there is no handshake phase the only legal values for the STAT_RX/STAT_TX bit pairs are ‘00 (Disabled) and ‘11 (Valid), any other value will produce results not compliant to USB standard. Isochronous endpoints implement double-buffering to ease application software development, using both ‘transmission’ and ‘reception’ packet memory areas to manage buffer swapping on each successful transaction in order to have always a complete buffer to be used by the application, while the USB peripheral fills the other.

The memory buffer which is currently used by the USB peripheral is defined by the DTOG bit related to the endpoint direction (DTOG_RX for ‘reception’ isochronous endpoints, DTOG_TX for ‘transmission’ isochronous endpoints, both in the related USB_EPnR register) according to *Table 224*.

Table 224. Isochronous memory buffers usage

Endpoint Type	DTOG bit value	Packet buffer used by the USB peripheral	Packet buffer used by the application software
IN	0	ADDRn_TX_0 / COUNTn_TX_0 buffer description table locations.	ADDRn_TX_1 / COUNTn_TX_1 buffer description table locations.
	1	ADDRn_TX_1 / COUNTn_TX_1 buffer description table locations.	ADDRn_TX_0 / COUNTn_TX_0 buffer description table locations.
OUT	0	ADDRn_RX_0 / COUNTn_RX_0 buffer description table locations.	ADDRn_RX_1 / COUNTn_RX_1 buffer description table locations.
	1	ADDRn_RX_1 / COUNTn_RX_1 buffer description table locations.	ADDRn_RX_0 / COUNTn_RX_0 buffer description table locations.

As it happens with double-buffered bulk endpoints, the USB_EPnR registers used to implement Isochronous endpoints are forced to be used as unidirectional ones. In case it is required to have Isochronous endpoints enabled both for reception and transmission, two USB_EPnR registers must be used.

The application software is responsible for the DTOG bit initialization according to the first buffer to be used; this has to be done considering the special toggle-only property that these two bits have. At the end of each transaction, the CTR_RX or CTR_TX bit of the addressed endpoint USB_EPnR register is set, depending on the enabled direction. At the same time, the affected DTOG bit in the USB_EPnR register is hardware toggled making buffer swapping completely software independent. STAT bit pair is not affected by transaction completion; since no flow control is possible for Isochronous transfers due to the lack of handshake phase, the endpoint remains always ‘11 (Valid). CRC errors or buffer-overrun conditions occurring during Isochronous OUT transfers are anyway considered as correct transactions and they always trigger an CTR_RX event. However, CRC errors will anyway set the ERR bit in the USB_ISTR register to notify the software of the possible data corruption.

42.5.5 Suspend/Resume events

The USB standard defines a special peripheral state, called SUSPEND, in which the average current drawn from the USB bus must not be greater than 2.5 mA. This requirement is of fundamental importance for bus-powered devices, while self-powered devices are not required to comply to this strict power consumption constraint. In suspend mode, the host PC sends the notification by not sending any traffic on the USB bus for more than 3 ms: since a SOF packet must be sent every 1 ms during normal operations, the USB peripheral detects the lack of 3 consecutive SOF packets as a suspend request from the host PC and set the SUSP bit to ‘1 in USB_ISTR register, causing an interrupt if enabled. Once the device is suspended, its normal operation can be restored by a so called RESUME sequence, which can be started from the host PC or directly from the peripheral itself, but it is always terminated by the host PC. The suspended USB peripheral must be anyway able to detect a RESET sequence, reacting to this event as a normal USB reset event.

The actual procedure used to suspend the USB peripheral is device dependent since according to the device composition, different actions may be required to reduce the total consumption.

A brief description of a typical suspend procedure is provided below, focused on the USB-related aspects of the application software routine responding to the SUSP notification of the USB peripheral:

1. Set the FSUSP bit in the USB_CNTR register to 1. This action activates the suspend mode within the USB peripheral. As soon as the suspend mode is activated, the check on SOF reception is disabled to avoid any further SUSP interrupts being issued while the USB is suspended.
2. Remove or reduce any static power consumption in blocks different from the USB peripheral.
3. Set LP_MODE bit in USB_CNTR register to 1 to remove static power consumption in the analog USB transceivers but keeping them able to detect resume activity.
4. Optionally turn off external oscillator and device PLL to stop any activity inside the device.

When an USB event occurs while the device is in SUSPEND mode, the RESUME procedure must be invoked to restore nominal clocks and regain normal USB behavior. Particular care must be taken to insure that this process does not take more than 10 ms when the wakening event is an USB reset sequence (See “Universal Serial Bus Specification” for more details). The start of a resume or reset sequence, while the USB peripheral is suspended, clears the LP_MODE bit in USB_CNTR register asynchronously. Even if this event can trigger an WKUP interrupt if enabled, the use of an interrupt response routine must be carefully evaluated because of the long latency due to system clock restart; to have the shorter latency before re-activating the nominal clock it is suggested to put the resume procedure just after the end of the suspend one, so its code is immediately executed as soon as the system clock restarts. To prevent ESD discharges or any other kind of noise from waking-up the system (the exit from suspend mode is an asynchronous event), a suitable analog filter on data line status is activated during suspend; the filter width is about 70 ns.

The following is a list of actions a resume procedure should address:

1. Optionally turn on external oscillator and/or device PLL.
2. Clear FSUSP bit of USB_CNTR register.
3. If the resume triggering event has to be identified, bits RXDP and RXDM in the USB_FNR register can be used according to *Table 225*, which also lists the intended software action in all the cases. If required, the end of resume or reset sequence can be detected monitoring the status of the above mentioned bits by checking when they reach the “10” configuration, which represent the Idle bus state; moreover at the end of a reset sequence the RESET bit in USB_ISTR register is set to 1, issuing an interrupt if enabled, which should be handled as usual.

Table 225. Resume event detection

[RXDP,RXDM] status	Wakeup event	Required resume software action
“00”	Root reset	None
“10”	None (noise on bus)	Go back in Suspend mode
“01”	Root resume	None
“11”	Not allowed (noise on bus)	Go back in Suspend mode

A device may require to exit from suspend mode as an answer to particular events not directly related to the USB protocol (e.g. a mouse movement wakes up the whole system). In this case, the resume sequence can be started by setting the RESUME bit in the USB_CNTR register to ‘1 and resetting it to 0 after an interval between 1 ms and 15 ms (this interval can be timed using ESOF interrupts, occurring with a 1 ms period when the system clock is running at nominal frequency). Once the RESUME bit is clear, the resume sequence will be completed by the host PC and its end can be monitored again using the RXDP and RXDM bits in the USB_FNR register.

Note: The RESUME bit must be anyway used only after the USB peripheral has been put in suspend mode, setting the FSUSP bit in USB_CNTR register to 1.

42.6 USB registers

The USB peripheral registers can be divided into the following groups:

- Common Registers: Interrupt and Control registers
- Endpoint Registers: Endpoint configuration and status
- Buffer Descriptor Table: Location of packet memory used to locate data buffers

All register addresses are expressed as offsets with respect to the USB peripheral registers base address 0x4000 5C00, except the buffer descriptor table locations, which starts at the address specified by the USB_BTABLE register.

Refer to *Section 1.1 on page 55* for a list of abbreviations used in register descriptions.

The peripheral registers can be accessed by half-words (16-bit) or words (32-bit).

42.6.1 Common registers

These registers affect the general behavior of the USB peripheral defining operating mode, interrupt handling, device address and giving access to the current frame number updated by the host PC.

USB control register (USB_CNTR)

Address offset: 0x40

Reset value: 0x0003

15	14	13	12	11	10	9	8	7	6	5	4	3	2	1	0
CTRM	PMAOVRM	ERRM	WKUPM	SUSPM	RESETM	SOFM	ESOFM	L1REQM	Res.	L1 RESUME	RESUME	FSUSP	LP_MODE	PDWN	FRES
rw	rw	rw	rw	rw	rw	rw	rw	rw		rw	rw	rw	rw	rw	rw

Bit 15 **CTRM:** Correct transfer interrupt mask
0: Correct Transfer (CTR) Interrupt disabled.
1: CTR Interrupt enabled, an interrupt request is generated when the corresponding bit in the USB_ISTR register is set.

Bit 14 **PMAOVRM:** Packet memory area over / underrun interrupt mask
0: PMAOVR Interrupt disabled.
1: PMAOVR Interrupt enabled, an interrupt request is generated when the corresponding bit in the USB_ISTR register is set.

Bit 13 **ERRM:** Error interrupt mask
0: ERR Interrupt disabled.
1: ERR Interrupt enabled, an interrupt request is generated when the corresponding bit in the USB_ISTR register is set.

Bit 12 **WKUPM:** Wakeup interrupt mask
0: WKUP Interrupt disabled.
1: WKUP Interrupt enabled, an interrupt request is generated when the corresponding bit in the USB_ISTR register is set.

Bit 11 **SUSPM:** Suspend mode interrupt mask
0: Suspend Mode Request (SUSP) Interrupt disabled.
1: SUSP Interrupt enabled, an interrupt request is generated when the corresponding bit in the USB_ISTR register is set.

Bit 10 **RESETM:** USB reset interrupt mask

0: RESET Interrupt disabled.
1: RESET Interrupt enabled, an interrupt request is generated when the corresponding bit in the USB_ISTR register is set.

Bit 9 **SOFM:** Start of frame interrupt mask

0: SOF Interrupt disabled.
1: SOF Interrupt enabled, an interrupt request is generated when the corresponding bit in the USB_ISTR register is set.

Bit 8 **ESOFM:** Expected start of frame interrupt mask

0: Expected Start of Frame (ESOF) Interrupt disabled.
1: ESOF Interrupt enabled, an interrupt request is generated when the corresponding bit in the USB_ISTR register is set.

Bit 7 **L1REQM:** LPM L1 state request interrupt mask

0: LPM L1 state request (L1REQ) Interrupt disabled.
1: L1REQ Interrupt enabled, an interrupt request is generated when the corresponding bit in the USB_ISTR register is set.

Bit 6 Reserved.

Bit 5 **L1RESUME:** LPM L1 Resume request

The microcontroller can set this bit to send a LPM L1 Resume signal to the host. After the signaling ends, this bit is cleared by hardware.

Bit 4 **RESUME:** Resume request

The microcontroller can set this bit to send a Resume signal to the host. It must be activated, according to USB specifications, for no less than 1 ms and no more than 15 ms after which the Host PC is ready to drive the resume sequence up to its end.

Bit 3 **FSUSP:** Force suspend

Software must set this bit when the SUSP interrupt is received, which is issued when no traffic is received by the USB peripheral for 3 ms.
0: No effect.
1: Enter suspend mode. Clocks and static power dissipation in the analog transceiver are left unaffected. If suspend power consumption is a requirement (bus-powered device), the application software should set the LP_MODE bit after FSUSP as explained below.

Bit 2 **LP_MODE:** Low-power mode

This mode is used when the suspend-mode power constraints require that all static power dissipation is avoided, except the one required to supply the external pull-up resistor. This condition should be entered when the application is ready to stop all system clocks, or reduce their frequency in order to meet the power consumption requirements of the USB suspend condition. The USB activity during the suspend mode (WKUP event) asynchronously resets this bit (it can also be reset by software).
0: No Low-power mode.
1: Enter Low-power mode.

Bit 1 **PDWN:** Power down

This bit is used to completely switch off all USB-related analog parts if it is required to completely disable the USB peripheral for any reason. When this bit is set, the USB peripheral is disconnected from the transceivers and it cannot be used.
0: Exit Power Down.
1: Enter Power down mode.

Bit 0 **FRES:** Force USB Reset

0: Clear USB reset.
1: Force a reset of the USB peripheral, exactly like a RESET signaling on the USB. The USB peripheral is held in RESET state until software clears this bit. A “USB-RESET” interrupt is generated, if enabled.

USB interrupt status register (USB_ISTR)

Address offset: 0x44

Reset value: 0x0000 0000

15	14	13	12	11	10	9	8	7	6	5	4	3	2	1	0
CTR	PMA OVR	ERR	WKUP	SUSP	RESET	SOF	ESOF	L1REQ	Res.	Res.	DIR	EP_ID[3:0]			
r	rc_w0	rc_w0	rc_w0	rc_w0	rc_w0	rc_w0	rc_w0	rc_w0			r	r	r	r	r

This register contains the status of all the interrupt sources allowing application software to determine, which events caused an interrupt request.

The upper part of this register contains single bits, each of them representing a specific event. These bits are set by the hardware when the related event occurs; if the corresponding bit in the USB_CNTR register is set, a generic interrupt request is generated. The interrupt routine, examining each bit, will perform all necessary actions, and finally it will clear the serviced bits. If any of them is not cleared, the interrupt is considered to be still pending, and the interrupt line will be kept high again. If several bits are set simultaneously, only a single interrupt will be generated.

Endpoint transaction completion can be handled in a different way to reduce interrupt response latency. The CTR bit is set by the hardware as soon as an endpoint successfully completes a transaction, generating a generic interrupt request if the corresponding bit in USB_CNTR is set. An endpoint dedicated interrupt condition is activated independently from the CTRM bit in the USB_CNTR register. Both interrupt conditions remain active until software clears the pending bit in the corresponding USB_EPnR register (the CTR bit is actually a read only bit). For endpoint-related interrupts, the software can use the Direction of Transaction (DIR) and EP_ID read-only bits to identify, which endpoint made the last interrupt request and called the corresponding interrupt service routine.

The user can choose the relative priority of simultaneously pending USB_ISTR events by specifying the order in which software checks USB_ISTR bits in an interrupt service routine. Only the bits related to events, which are serviced, are cleared. At the end of the service routine, another interrupt will be requested, to service the remaining conditions.

To avoid spurious clearing of some bits, it is recommended to clear them with a load instruction where all bits which must not be altered are written with 1, and all bits to be cleared are written with ‘0 (these bits can only be cleared by software). Read-modify-write cycles should be avoided because between the read and the write operations another bit could be set by the hardware and the next write will clear it before the microprocessor has the time to serve the event.

The following describes each bit in detail:

Bit 15 **CTR:** Correct transfer

This bit is set by the hardware to indicate that an endpoint has successfully completed a transaction; using DIR and EP_ID bits software can determine which endpoint requested the interrupt. This bit is read-only.

Bit 14 **PMAOVR:** Packet memory area over / underrun

This bit is set if the microcontroller has not been able to respond in time to an USB memory request. The USB peripheral handles this event in the following way: During reception an ACK handshake packet is not sent, during transmission a bit-stuff error is forced on the transmitted stream; in both cases the host will retry the transaction. The PMAOVR interrupt should never occur during normal operations. Since the failed transaction is retried by the host, the application software has the chance to speed-up device operations during this interrupt handling, to be ready for the next transaction retry; however this does not happen during Isochronous transfers (no isochronous transaction is anyway retried) leading to a loss of data in this case. This bit is read/write but only ‘0 can be written and writing ‘1 has no effect.

Bit 13 **ERR:** Error

This flag is set whenever one of the errors listed below has occurred:
NANS: No ANSwer. The timeout for a host response has expired.
CRC: Cyclic Redundancy Check error. One of the received CRCs, either in the token or in the data, was wrong.
BST: Bit Stuffing error. A bit stuffing error was detected anywhere in the PID, data, and/or CRC.
FVIO: Framing format Violation. A non-standard frame was received (EOP not in the right place, wrong token sequence, etc.).
The USB software can usually ignore errors, since the USB peripheral and the PC host manage retransmission in case of errors in a fully transparent way. This interrupt can be useful during the software development phase, or to monitor the quality of transmission over the USB bus, to flag possible problems to the user (e.g. loose connector, too noisy environment, broken conductor in the USB cable and so on). This bit is read/write but only ‘0 can be written and writing ‘1 has no effect.

Bit 12 **WKUP:** Wakeup

This bit is set to 1 by the hardware when, during suspend mode, activity is detected that wakes up the USB peripheral. This event asynchronously clears the LP_MODE bit in the CTLR register and activates the USB_WAKEUP line, which can be used to notify the rest of the device (e.g. wakeup unit) about the start of the resume process. This bit is read/write but only ‘0 can be written and writing ‘1 has no effect.

Bit 11 **SUSP:** Suspend mode request

This bit is set by the hardware when no traffic has been received for 3 ms, indicating a suspend mode request from the USB bus. The suspend condition check is enabled immediately after any USB reset and it is disabled by the hardware when the suspend mode is active (FSUSP=1) until the end of resume sequence. This bit is read/write but only ‘0 can be written and writing ‘1 has no effect.

Bit 10 **RESET:** USB reset request

Set when the USB peripheral detects an active USB RESET signal at its inputs. The USB peripheral, in response to a RESET, just resets its internal protocol state machine, generating an interrupt if RESETM enable bit in the USB_CNTR register is set. Reception and transmission are disabled until the RESET bit is cleared. All configuration registers do not reset: the microcontroller must explicitly clear these registers (this is to ensure that the RESET interrupt can be safely delivered, and any transaction immediately followed by a RESET can be completed). The function address and endpoint registers are reset by an USB reset event.
This bit is read/write but only ‘0 can be written and writing ‘1 has no effect.

Bit 9 **SOF:** Start of frame

This bit signals the beginning of a new USB frame and it is set when a SOF packet arrives through the USB bus. The interrupt service routine may monitor the SOF events to have a 1 ms synchronization event to the USB host and to safely read the USB_FNR register which is updated at the SOF packet reception (this could be useful for isochronous applications). This bit is read/write but only ‘0 can be written and writing ‘1 has no effect.

Bit 8 **ESOF:** Expected start of frame

This bit is set by the hardware when an SOF packet is expected but not received. The host sends an SOF packet each 1 ms, but if the hub does not receive it properly, the Suspend Timer issues this interrupt. If three consecutive ESOF interrupts are generated (i.e. three SOF packets are lost) without any traffic occurring in between, a SUSP interrupt is generated. This bit is set even when the missing SOF packets occur while the Suspend Timer is not yet locked. This bit is read/write but only ‘0 can be written and writing ‘1 has no effect.

Bit 7 **L1REQ:** LPM L1 state request

This bit is set by the hardware when LPM command to enter the L1 state is successfully received and acknowledged. This bit is read/write but only ‘0 can be written and writing ‘1 has no effect.

Bits 6:5 Reserved.

Bit 4 **DIR:** Direction of transaction

This bit is written by the hardware according to the direction of the successful transaction, which generated the interrupt request.
If DIR bit=0, CTR_TX bit is set in the USB_EPnR register related to the interrupting endpoint. The interrupting transaction is of IN type (data transmitted by the USB peripheral to the host PC).
If DIR bit=1, CTR_RX bit or both CTR_TX/CTR_RX are set in the USB_EPnR register related to the interrupting endpoint. The interrupting transaction is of OUT type (data received by the USB peripheral from the host PC) or two pending transactions are waiting to be processed.
This information can be used by the application software to access the USB_EPnR bits related to the triggering transaction since it represents the direction having the interrupt pending. This bit is read-only.

Bits 3:0 **EP_ID[3:0]:** Endpoint Identifier

These bits are written by the hardware according to the endpoint number, which generated the interrupt request. If several endpoint transactions are pending, the hardware writes the endpoint identifier related to the endpoint having the highest priority defined in the following way: Two endpoint sets are defined, in order of priority: Isochronous and double-buffered bulk endpoints are considered first and then the other endpoints are examined. If more than one endpoint from the same set is requesting an interrupt, the EP_ID bits in USB_ISTR register are assigned according to the lowest requesting endpoint register, EP0R having the highest priority followed by EP1R and so on. The application software can assign a register to each endpoint according to this priority scheme, so as to order the concurring endpoint requests in a suitable way. These bits are read only.

USB frame number register (USB_FNR)

Address offset: 0x48

Reset value: 0x0XXX where X is undefined

15	14	13	12	11	10	9	8	7	6	5	4	3	2	1	0
RXDP	RXDM	LCK	LSOF[1:0]		FN[10:0]										
r	r	r	r	r	r	r	r	r	r	r	r	r	r	r	r

Bit 15 **RXDP:** Receive data + line status

This bit can be used to observe the status of received data plus upstream port data line. It can be used during end-of-suspend routines to help determining the wakeup event.

Bit 14 **RXDM:** Receive data - line status

This bit can be used to observe the status of received data minus upstream port data line. It can be used during end-of-suspend routines to help determining the wakeup event.

Bit 13 **LCK:** Locked

This bit is set by the hardware when at least two consecutive SOF packets have been received after the end of an USB reset condition or after the end of an USB resume sequence. Once locked, the frame timer remains in this state until an USB reset or USB suspend event occurs.

Bits 12:11 **LSOF[1:0]:** Lost SOF

These bits are written by the hardware when an ESOF interrupt is generated, counting the number of consecutive SOF packets lost. At the reception of an SOF packet, these bits are cleared.

Bits 10:0 **FN[10:0]:** Frame number

This bit field contains the 11-bits frame number contained in the last received SOF packet. The frame number is incremented for every frame sent by the host and it is useful for Isochronous transfers. This bit field is updated on the generation of an SOF interrupt.

USB device address (USB_DADDR)

Address offset: 0x4C

Reset value: 0x0000

15	14	13	12	11	10	9	8	7	6	5	4	3	2	1	0
Res.	Res.	Res.	Res.	Res.	Res.	Res.	Res.	EF	ADD6	ADD5	ADD4	ADD3	ADD2	ADD1	ADD0
								rw	rw	rw	rw	rw	rw	rw	rw

Bits 15:8 Reserved

Bit 7 **EF:** Enable function

This bit is set by the software to enable the USB device. The address of this device is contained in the following ADD[6:0] bits. If this bit is at ‘0 no transactions are handled, irrespective of the settings of USB_EPnR registers.

Bits 6:0 **ADD[6:0]:** Device address

These bits contain the USB function address assigned by the host PC during the enumeration process. Both this field and the Endpoint Address (EA) field in the associated USB_EPnR register must match with the information contained in a USB token in order to handle a transaction to the required endpoint.

Buffer table address (USB_BTABLE)

Address offset: 0x50

Reset value: 0x0000

15	14	13	12	11	10	9	8	7	6	5	4	3	2	1	0
BTABLE[15:3]													Res.	Res.	Res.
rw	rw	rw	rw	rw	rw	rw	rw	rw	rw	rw	rw	rw			

Bits 15:3 **BTABLE[15:3]:** Buffer table

These bits contain the start address of the buffer allocation table inside the dedicated packet memory. This table describes each endpoint buffer location and size and it must be aligned to an 8 byte boundary (the 3 least significant bits are always ‘0). At the beginning of every transaction addressed to this device, the USB peripheral reads the element of this table related to the addressed endpoint, to get its buffer start location and the buffer size (Refer to *Structure and usage of packet buffers on page 1355*).

Bits 2:0 Reserved, forced by hardware to 0.

LPM control and status register (USB_LPMCSR)

Address offset: 0x54

Reset value: 0x0000

15	14	13	12	11	10	9	8	7	6	5	4	3	2	1	0
Res.	Res.	Res.	Res.	Res.	Res.	Res.	Res.	BESL[3:0]				REM WAKE	Res.	LPM ACK	LPM EN
								r				r		rw	rw

Bits 15:8 Reserved.

Bits 7:4 **BESL[3:0]:** BESL value

These bits contain the BESL value received with last ACKed LPM Token

Bit 3 **REMWAKE:** bRemoteWake value

This bit contains the bRemoteWake value received with last ACKed LPM Token

Bit 2 Reserved

Bit 1 **LPMACK:** LPM Token acknowledge enable

0: the valid LPM Token will be NYET.
1: the valid LPM Token will be ACK.
The NYET/ACK will be returned only on a successful LPM transaction:
No errors in both the EXT token and the LPM token (else ERROR)
A valid bLinkState = 0001B (L1) is received (else STALL)

Bit 0 **LPMEN:** LPM support enable

This bit is set by the software to enable the LPM support within the USB device. If this bit is at ‘0 no LPM transactions are handled.

Battery charging detector (USB_BCDR)

Address offset: 0x58

Reset value: 0x0000

15	14	13	12	11	10	9	8	7	6	5	4	3	2	1	0
DPPU	Res.	Res.	Res.	Res.	Res.	Res.	Res.	PS2 DET	SDET	PDET	DC DET	SDEN	PDEN	DCD EN	BCD EN
rw								r	r	r	r	rw	rw	rw	rw

Bit 15 **DPPU:** DP pull-up control

This bit is set by software to enable the embedded pull-up on the DP line. Clearing it to ‘0’ can be used to signalize disconnect to the host when needed by the user software.

Bits 14:8 Reserved.

Bit 7 **PS2DET:** DM pull-up detection status

This bit is active only during PD and gives the result of comparison between DM voltage level and V_{LGC} threshold. In normal situation, the DM level should be below this threshold. If it is above, it means that the DM is externally pulled high. This can be caused by connection to a PS2 port (which pulls-up both DP and DM lines) or to some proprietary charger not following the BCD specification.

0: Normal port detected (connected to SDP, ACA, CDP or DCP).
1: PS2 port or proprietary charger detected.

Bit 6 **SDET:** Secondary detection (SD) status

This bit gives the result of SD.

0: CDP detected.
1: DCP detected.

Bit 5 **PDET:** Primary detection (PD) status

This bit gives the result of PD.

0: no BCD support detected (connected to SDP or proprietary device).
1: BCD support detected (connected to ACA, CDP or DCP).

Bit 4 **DCDET:** Data contact detection (DCD) status

This bit gives the result of DCD.

0: data lines contact not detected.
1: data lines contact detected.

Bit 3 **SDEN:** Secondary detection (SD) mode enable

This bit is set by the software to put the BCD into SD mode. Only one detection mode (DCD, PD, SD or OFF) should be selected to work correctly.

Bit 2 **PDEN:** Primary detection (PD) mode enable

This bit is set by the software to put the BCD into PD mode. Only one detection mode (DCD, PD, SD or OFF) should be selected to work correctly.

Bit 1 **DCDEN:** Data contact detection (DCD) mode enable

This bit is set by the software to put the BCD into DCD mode. Only one detection mode (DCD, PD, SD or OFF) should be selected to work correctly.

Bit 0 **BCDEN:** Battery charging detector (BCD) enable

This bit is set by the software to enable the BCD support within the USB device. When enabled, the USB PHY is fully controlled by BCD and cannot be used for normal communication. Once the BCD discovery is finished, the BCD should be placed in OFF mode by clearing this bit to ‘0 in order to allow the normal USB operation.

Endpoint-specific registers

The number of these registers varies according to the number of endpoints that the USB peripheral is designed to handle. The USB peripheral supports up to 8 bidirectional endpoints. Each USB device must support a control endpoint whose address (EA bits) must be set to 0. The USB peripheral behaves in an undefined way if multiple endpoints are enabled having the same endpoint number value. For each endpoint, an USB_EPnR register is available to store the endpoint specific information.

USB endpoint n register (USB_EPnR), n=[0..7]

Address offset: 0x00 to 0x1C

Reset value: 0x0000

15	14	13	12	11	10	9	8	7	6	5	4	3	2	1	0
CTR_ RX	DTOG _RX	STAT_RX[1:0]		SETUP	EP TYPE[1:0]		EP_ KIND	CTR_ TX	DTOG_ TX	STAT_TX[1:0]		EA[3:0]			
rc_w0	t	t	t	r	rw	rw	rw	rc_w0	t	t	t	rw	rw	rw	rw

They are also reset when an USB reset is received from the USB bus or forced through bit FRES in the CTLR register, except the CTR_RX and CTR_TX bits, which are kept unchanged to avoid missing a correct packet notification immediately followed by an USB reset event. Each endpoint has its USB_EPnR register where *n* is the endpoint identifier.

Read-modify-write cycles on these registers should be avoided because between the read and the write operations some bits could be set by the hardware and the next write would modify them before the CPU has the time to detect the change. For this purpose, all bits affected by this problem have an ‘invariant’ value that must be used whenever their modification is not required. It is recommended to modify these registers with a load instruction where all the bits, which can be modified only by the hardware, are written with their ‘invariant’ value.

Bit 15 **CTR_RX:** Correct Transfer for reception

This bit is set by the hardware when an OUT/SETUP transaction is successfully completed on this endpoint; the software can only clear this bit. If the CTRM bit in USB_CNTR register is set accordingly, a generic interrupt condition is generated together with the endpoint related interrupt condition, which is always activated. The type of occurred transaction, OUT or SETUP, can be determined from the SETUP bit described below.

A transaction ended with a NAK or STALL handshake does not set this bit, since no data is actually transferred, as in the case of protocol errors or data toggle mismatches.

This bit is read/write but only ‘0 can be written, writing 1 has no effect.

Bit 14 **DTOG_RX:** Data Toggle, for reception transfers

If the endpoint is not Isochronous, this bit contains the expected value of the data toggle bit (0=DATA0, 1=DATA1) for the next data packet to be received. Hardware toggles this bit, when the ACK handshake is sent to the USB host, following a data packet reception having a matching data PID value; if the endpoint is defined as a control one, hardware clears this bit at the reception of a SETUP PID addressed to this endpoint.

If the endpoint is using the double-buffering feature this bit is used to support packet buffer swapping too (Refer to *Section 42.5.3: Double-buffered endpoints*).

If the endpoint is Isochronous, this bit is used only to support packet buffer swapping since no data toggling is used for this sort of endpoints and only DATA0 packet are transmitted (Refer to *Section 42.5.4: Isochronous transfers*). Hardware toggles this bit just after the end of data packet reception, since no handshake is used for isochronous transfers.

This bit can also be toggled by the software to initialize its value (mandatory when the endpoint is not a control one) or to force specific data toggle/packet buffer usage. When the application software writes ‘0, the value of DTOG_RX remains unchanged, while writing ‘1 makes the bit value toggle. This bit is read/write but it can be only toggled by writing 1.

Bits 13:12 **STAT_RX [1:0]:** Status bits, for reception transfers

These bits contain information about the endpoint status, which are listed in *Table 226: Reception status encoding on page 1377*.These bits can be toggled by software to initialize their value. When the application software writes ‘0, the value remains unchanged, while writing ‘1 makes the bit value toggle. Hardware sets the STAT_RX bits to NAK when a correct transfer has occurred (CTR_RX=1) corresponding to a OUT or SETUP (control only) transaction addressed to this endpoint, so the software has the time to elaborate the received data before it acknowledge a new transaction

Double-buffered bulk endpoints implement a special transaction flow control, which control the status based upon buffer availability condition (Refer to *Section 42.5.3: Double-buffered endpoints*).

If the endpoint is defined as Isochronous, its status can be only “VALID” or “DISABLED”, so that the hardware cannot change the status of the endpoint after a successful transaction. If the software sets the STAT_RX bits to ‘STALL’ or ‘NAK’ for an Isochronous endpoint, the USB peripheral behavior is not defined. These bits are read/write but they can be only toggled by writing ‘1.

Bit 11 **SETUP:** Setup transaction completed

This bit is read-only and it is set by the hardware when the last completed transaction is a SETUP. This bit changes its value only for control endpoints. It must be examined, in the case of a successful receive transaction (CTR_RX event), to determine the type of transaction occurred. To protect the interrupt service routine from the changes in SETUP bits due to next incoming tokens, this bit is kept frozen while CTR_RX bit is at 1; its state changes when CTR_RX is at 0. This bit is read-only.

Bits 10:9 **EP_TYPE[1:0]:** Endpoint type

These bits configure the behavior of this endpoint as described in *Table 227: Endpoint type encoding on page 1378*. Endpoint 0 must always be a control endpoint and each USB function must have at least one control endpoint which has address 0, but there may be other control endpoints if required. Only control endpoints handle SETUP transactions, which are ignored by endpoints of other kinds. SETUP transactions cannot be answered with NAK or STALL. If a control endpoint is defined as NAK, the USB peripheral will not answer, simulating a receive error, in the receive direction when a SETUP transaction is received. If the control endpoint is defined as STALL in the receive direction, then the SETUP packet will be accepted anyway, transferring data and issuing the CTR interrupt. The reception of OUT transactions is handled in the normal way, even if the endpoint is a control one.

Bulk and interrupt endpoints have very similar behavior and they differ only in the special feature available using the EP_KIND configuration bit.

The usage of Isochronous endpoints is explained in *Section 42.5.4: Isochronous transfers*

Bit 8 **EP_KIND:** Endpoint kind

The meaning of this bit depends on the endpoint type configured by the EP_TYPE bits. *Table 228* summarizes the different meanings.

DBL_BUF: This bit is set by the software to enable the double-buffering feature for this bulk endpoint. The usage of double-buffered bulk endpoints is explained in *Section 42.5.3: Double-buffered endpoints*.

STATUS_OUT: This bit is set by the software to indicate that a status out transaction is expected: in this case all OUT transactions containing more than zero data bytes are answered ‘STALL’ instead of ‘ACK’. This bit may be used to improve the robustness of the application to protocol errors during control transfers and its usage is intended for control endpoints only. When STATUS_OUT is reset, OUT transactions can have any number of bytes, as required.

Bit 7 **CTR_TX:** Correct Transfer for transmission

This bit is set by the hardware when an IN transaction is successfully completed on this endpoint; the software can only clear this bit. If the CTRM bit in the USB_CNTR register is set accordingly, a generic interrupt condition is generated together with the endpoint related interrupt condition, which is always activated.

A transaction ended with a NAK or STALL handshake does not set this bit, since no data is actually transferred, as in the case of protocol errors or data toggle mismatches.

This bit is read/write but only ‘0 can be written.

Bit 6 **DTOG_TX:** Data Toggle, for transmission transfers

If the endpoint is non-isochronous, this bit contains the required value of the data toggle bit (0=DATA0, 1=DATA1) for the next data packet to be transmitted. Hardware toggles this bit when the ACK handshake is received from the USB host, following a data packet transmission. If the endpoint is defined as a control one, hardware sets this bit to 1 at the reception of a SETUP PID addressed to this endpoint.

If the endpoint is using the double buffer feature, this bit is used to support packet buffer swapping too (Refer to *Section 42.5.3: Double-buffered endpoints*)

If the endpoint is Isochronous, this bit is used to support packet buffer swapping since no data toggling is used for this sort of endpoints and only DATA0 packet are transmitted (Refer to *Section 42.5.4: Isochronous transfers*). Hardware toggles this bit just after the end of data packet transmission, since no handshake is used for Isochronous transfers.

This bit can also be toggled by the software to initialize its value (mandatory when the endpoint is not a control one) or to force a specific data toggle/packet buffer usage. When the application software writes ‘0, the value of DTOG_TX remains unchanged, while writing ‘1 makes the bit value toggle. This bit is read/write but it can only be toggled by writing 1.

Bits 5:4 **STAT_TX [1:0]:** Status bits, for transmission transfers

These bits contain the information about the endpoint status, listed in *Table 229*. These bits can be toggled by the software to initialize their value. When the application software writes ‘0, the value remains unchanged, while writing ‘1 makes the bit value toggle. Hardware sets the STAT_TX bits to NAK, when a correct transfer has occurred (CTR_TX=1) corresponding to a IN or SETUP (control only) transaction addressed to this endpoint. It then waits for the software to prepare the next set of data to be transmitted.

Double-buffered bulk endpoints implement a special transaction flow control, which controls the status based on buffer availability condition (Refer to *Section 42.5.3: Double-buffered endpoints*).

If the endpoint is defined as Isochronous, its status can only be “VALID” or “DISABLED”. Therefore, the hardware cannot change the status of the endpoint after a successful transaction. If the software sets the STAT_TX bits to ‘STALL’ or ‘NAK’ for an Isochronous endpoint, the USB peripheral behavior is not defined. These bits are read/write but they can be only toggled by writing ‘1.

Bits 3:0 **EA[3:0]:** Endpoint address

Software must write in this field the 4-bit address used to identify the transactions directed to this endpoint. A value must be written before enabling the corresponding endpoint.

Table 226. Reception status encoding

STAT_RX[1:0]	Meaning
00	**DISABLED:** all reception requests addressed to this endpoint are ignored.
01	**STALL**: the endpoint is stalled and all reception requests result in a STALL handshake.
10	**NAK**: the endpoint is naked and all reception requests result in a NAK handshake.
11	**VALID**: this endpoint is enabled for reception.

Table 227. Endpoint type encoding

EP_TYPE[1:0]	Meaning
00	BULK
01	CONTROL
10	ISO
11	INTERRUPT

Table 228. Endpoint kind meaning

EP_TYPE[1:0]		EP_KIND meaning
00	BULK	DBL_BUF
01	CONTROL	STATUS_OUT
10	ISO	Not used
11	INTERRUPT	Not used

Table 229. Transmission status encoding

STAT_TX[1:0]	Meaning
00	**DISABLED:** all transmission requests addressed to this endpoint are ignored.
01	**STALL**: the endpoint is stalled and all transmission requests result in a STALL handshake.
10	**NAK**: the endpoint is naked and all transmission requests result in a NAK handshake.
11	**VALID**: this endpoint is enabled for transmission.

42.6.2 Buffer descriptor table

Although the buffer descriptor table is located inside the packet buffer memory, its entries can be considered as additional registers used to configure the location and size of the packet buffers used to exchange data between the USB macro cell and the device.

The first packet memory location is located at 0x4000 6000. The buffer descriptor table entry associated with the USB_EPnR registers is described below. The packet memory should be accessed only by byte (8-bit) or half-word (16-bit) accesses. Word (32-bit) accesses are not allowed.

A thorough explanation of packet buffers and the buffer descriptor table usage can be found in *Structure and usage of packet buffers on page 1355*.

Transmission buffer address n (USB_ADDRn_TX)

Address offset: [USB_BTABLE] + n*8

Note: In case of double-buffered or isochronous endpoints in the IN direction, this address location is referred to as USB_ADDRn_TX_0.

In case of double-buffered or isochronous endpoints in the OUT direction, this address location is used for USB_ADDRn_RX_0.

15	14	13	12	11	10	9	8	7	6	5	4	3	2	1	0
ADDRn_TX[15:1]															-
rw	rw	rw	rw	rw	rw	rw	rw	rw	rw	rw	rw	rw	rw	rw	-

Bits 15:1 **ADDRn_TX[15:1]:** Transmission buffer address

These bits point to the starting address of the packet buffer containing data to be transmitted by the endpoint associated with the USB_EPnR register at the next IN token addressed to it.

Bit 0 Must always be written as ‘0 since packet memory is half-word wide and all packet buffers must be half-word aligned.

Transmission byte count n (USB_COUNTn_TX)

Address offset: [USB_BTABLE] + n*8 + 2

Note: In case of double-buffered or isochronous endpoints in the IN direction, this address location is referred to as USB_COUNTn_TX_0.

In case of double-buffered or isochronous endpoints in the OUT direction, this address location is used for USB_COUNTn_RX_0.

15	14	13	12	11	10	9	8	7	6	5	4	3	2	1	0
Res.	Res.	Res.	Res.	Res.	Res.	COUNTn_TX[9:0]									
						rw	rw	rw	rw	rw	rw	rw	rw	rw	rw

Bits 15:10 These bits are not used since packet size is limited by USB specifications to 1023 bytes. Their value is not considered by the USB peripheral.

Bits 9:0 **COUNTn_TX[9:0]:** Transmission byte count
These bits contain the number of bytes to be transmitted by the endpoint associated with the USB_EPnR register at the next IN token addressed to it.

Reception buffer address n (USB_ADDRn_RX)

Address offset: [USB_BTABLE] + n*8 + 4

Note: In case of double-buffered or isochronous endpoints in the OUT direction, this address location is referred to as USB_ADDRn_RX_1.

In case of double-buffered or isochronous endpoints in the IN direction, this address location is used for USB_ADDRn_TX_1.

15	14	13	12	11	10	9	8	7	6	5	4	3	2	1	0
ADDRn_RX[15:1]															-
rw	rw	rw	rw	rw	rw	rw	rw	rw	rw	rw	rw	rw	rw	rw	-

Bits 15:1 **ADDRn_RX[15:1]:** Reception buffer address
These bits point to the starting address of the packet buffer, which will contain the data received by the endpoint associated with the USB_EPnR register at the next OUT/SETUP token addressed to it.

Bit 0 This bit must always be written as ‘0 since packet memory is half-word wide and all packet buffers must be half-word aligned.

Reception byte count n (USB_COUNTn_RX)

Address offset: [USB_BTABLE] + n*8 + 6

Note: In case of double-buffered or isochronous endpoints in the OUT direction, this address location is referred to as USB_COUNTn_RX_1.

In case of double-buffered or isochronous endpoints in the IN direction, this address location is used for USB_COUNTn_TX_1.

15	14	13	12	11	10	9	8	7	6	5	4	3	2	1	0
BLSIZE	NUM_BLOCK[4:0]					COUNTn_RX[9:0]									
rw	rw	rw	rw	rw	rw	r	r	r	r	r	r	r	r	r	r

This table location is used to store two different values, both required during packet reception. The most significant bits contains the definition of allocated buffer size, to allow buffer overflow detection, while the least significant part of this location is written back by the USB peripheral at the end of reception to give the actual number of received bytes. Due to the restrictions on the number of available bits, buffer size is represented using the number of allocated memory blocks, where block size can be selected to choose the trade-off between fine-granularity/small-buffer and coarse-granularity/large-buffer. The size of allocated buffer is a part of the endpoint descriptor and it is normally defined during the

enumeration process according to its maxPacketSize parameter value (See “Universal Serial Bus Specification”).

Bit 15 **BL_SIZE:** Block size

This bit selects the size of memory block used to define the allocated buffer area.

– If BL_SIZE=0, the memory block is 2-byte large, which is the minimum block allowed in a half-word wide memory. With this block size the allocated buffer size ranges from 2 to 62 bytes.

– If BL_SIZE=1, the memory block is 32-byte large, which allows to reach the maximum packet length defined by USB specifications. With this block size the allocated buffer size theoretically ranges from 32 to 1024 bytes, which is the longest packet size allowed by USB standard specifications. However, the applicable size is limited by the available buffer memory.

Bits 14:10 **NUM_BLOCK[4:0]:** Number of blocks

These bits define the number of memory blocks allocated to this packet buffer. The actual amount of allocated memory depends on the BL_SIZE value as illustrated in *Table 230*.

Bits 9:0 **COUNTn_RX[9:0]:** Reception byte count

These bits contain the number of bytes received by the endpoint associated with the USB_EPnR register during the last OUT/SETUP transaction addressed to it.

Table 230. Definition of allocated buffer memory

Value of NUM_BLOCK[4:0]	Memory allocated when BL_SIZE=0	Memory allocated when BL_SIZE=1
0 (‘00000)	Not allowed	32 bytes
1 (‘00001)	2 bytes	64 bytes
2 (‘00010)	4 bytes	96 bytes
3 (‘00011)	6 bytes	128 bytes
...	...	...
14 (‘01110)	28 bytes	480 bytes
15 (‘01111)	30 bytes	
16 (‘10000)	32 bytes	
...	...	...
29 (‘11101)	58 bytes	
30 (‘11110)	60 bytes	
31 (‘11111)	62 bytes	N/A

42.6.3 USB register map

The table below provides the USB register map and reset values.

Table 231. USB register map and reset values

Offset	Register	31	30	29	28	27	26	25	24	23	22	21	20	19	18	17	16	15	14	13	12	11	10	9	8	7	6	5	4	3	2	1	0
0x00	**USB_EP0R**	Res.	Res.	Res.	Res.	Res.	Res.	Res.	Res.	Res.	Res.	Res.	Res.	Res.	Res.	Res.	Res.	CTR_RX	DTOG_RX	STAT_RX [1:0]		SETUP	EP TYPE [1:0]		EP_KIND	CTR_TX	DTOG_TX	STAT_TX [1:0]		EA[3:0]			
	Reset value																	0	0	0	0	0	0	0	0	0	0	0	0	0	0	0	0
0x04	**USB_EP1R**	Res.	Res.	Res.	Res.	Res.	Res.	Res.	Res.	Res.	Res.	Res.	Res.	Res.	Res.	Res.	Res.	CTR_RX	DTOG_RX	STAT_RX [1:0]		SETUP	EP TYPE [1:0]		EP_KIND	CTR_TX	DTOG_TX	STAT_TX [1:0]		EA[3:0]			
	Reset value																	0	0	0	0	0	0	0	0	0	0	0	0	0	0	0	0
0x08	**USB_EP2R**	Res.	Res.	Res.	Res.	Res.	Res.	Res.	Res.	Res.	Res.	Res.	Res.	Res.	Res.	Res.	Res.	CTR_RX	DTOG_RX	STAT_RX [1:0]		SETUP	EP TYPE [1:0]		EP_KIND	CTR_TX	DTOG_TX	STAT_TX [1:0]		EA[3:0]			
	Reset value																	0	0	0	0	0	0	0	0	0	0	0	0	0	0	0	0
0x0C	**USB_EP3R**	Res.	Res.	Res.	Res.	Res.	Res.	Res.	Res.	Res.	Res.	Res.	Res.	Res.	Res.	Res.	Res.	CTR_RX	DTOG_RX	STAT_RX [1:0]		SETUP	EP TYPE [1:0]		EP_KIND	CTR_TX	DTOG_TX	STAT_TX [1:0]		EA[3:0]			
	Reset value																	0	0	0	0	0	0	0	0	0	0	0	0	0	0	0	0
0x10	**USB_EP4R**	Res.	Res.	Res.	Res.	Res.	Res.	Res.	Res.	Res.	Res.	Res.	Res.	Res.	Res.	Res.	Res.	CTR_RX	DTOG_RX	STAT_RX [1:0]		SETUP	EP TYPE [1:0]		EP_KIND	CTR_TX	DTOG_TX	STAT_TX [1:0]		EA[3:0]			
	Reset value																	0	0	0	0	0	0	0	0	0	0	0	0	0	0	0	0
0x14	**USB_EP5R**	Res.	Res.	Res.	Res.	Res.	Res.	Res.	Res.	Res.	Res.	Res.	Res.	Res.	Res.	Res.	Res.	CTR_RX	DTOG_RX	STAT_RX [1:0]		SETUP	EP TYPE [1:0]		EP_KIND	CTR_TX	DTOG_TX	STAT_TX [1:0]		EA[3:0]			
	Reset value																	0	0	0	0	0	0	0	0	0	0	0	0	0	0	0	0
0x18	**USB_EP6R**	Res.	Res.	Res.	Res.	Res.	Res.	Res.	Res.	Res.	Res.	Res.	Res.	Res.	Res.	Res.	Res.	CTR_RX	DTOG_RX	STAT_RX [1:0]		SETUP	EP TYPE [1:0]		EP_KIND	CTR_TX	DTOG_TX	STAT_TX [1:0]		EA[3:0]			
	Reset value																	0	0	0	0	0	0	0	0	0	0	0	0	0	0	0	0
0x1C	**USB_EP7R**	Res.	Res.	Res.	Res.	Res.	Res.	Res.	Res.	Res.	Res.	Res.	Res.	Res.	Res.	Res.	Res.	CTR_RX	DTOG_RX	STAT_RX [1:0]		SETUP	EP TYPE [1:0]		EP_KIND	CTR_TX	DTOG_TX	STAT_TX [1:0]		EA[3:0]			
	Reset value																	0	0	0	0	0	0	0	0	0	0	0	0	0	0	0	0
0x20-0x3F	Reserved																																
0x40	**USB_CNTR**	Res.	Res.	Res.	Res.	Res.	Res.	Res.	Res.	Res.	Res.	Res.	Res.	Res.	Res.	Res.	Res.	CTRM	PMAOVRM	ERRM	WKUPM	SUSPM	RESETM	SOFM	ESOFM	L1REQM	Res.	L1RESUME	RESUME	FSUSP	LPMODE	PDWN	FRES
	Reset value																	0	0	0	0	0	0	0	0				0	0	0	1	1
0x44	**USB_ISTR**	Res.	Res.	Res.	Res.	Res.	Res.	Res.	Res.	Res.	Res.	Res.	Res.	Res.	Res.	Res.	Res.	CTR	PMAOVR	ERR	WKUP	SUSP	RESET	SOF	ESOF	L1REQ	Res.	Res.	DIR	EP_ID[3:0]			
	Reset value																	0	0	0	0	0	0	0	0				0	0	0	0	0
0x48	**USB_FNR**	Res.	Res.	Res.	Res.	Res.	Res.	Res.	Res.	Res.	Res.	Res.	Res.	Res.	Res.	Res.	Res.	RXDP	RXDM	LCK	LSOF [1:0]		FN[10:0]										
	Reset value																	0	0	0	0	0	x	x	x	x	x	x	x	x	x	x	x
0x4C	**USB_DADDR**	Res.	Res.	Res.	Res.	Res.	Res.	Res.	Res.	Res.	Res.	Res.	Res.	Res.	Res.	Res.	Res.	Res.	Res.	Res.	Res.	Res.	Res.	Res.	Res.	EF	ADD[6:0]						
	Reset value																									0	0	0	0	0	0	0	0

Table 231. USB register map and reset values (continued)

Offset	Register	31	30	29	28	27	26	25	24	23	22	21	20	19	18	17	16	15	14	13	12	11	10	9	8	7	6	5	4	3	2	1	0
0x50	**USB_BTABLE**	Res.	Res.	Res.	Res.	Res.	Res.	Res.	Res.	Res.	Res.	Res.	Res.	Res.	Res.	Res.	Res.	BTABLE[15:3]													Res.	Res.	Res.
	Reset value																	0	0	0	0	0	0	0	0	0	0	0	0	0			
0x54	**USB_LPMCSR**	Res.	Res.	Res.	Res.	Res.	Res.	Res.	Res.	Res.	Res.	Res.	Res.	Res.	Res.	Res.	Res.	Res.	Res.	Res.	Res.	Res.	Res.	Res.	Res.	BESL[3:0]				REMWAKE	Res.	LPMACK	LPMEN
	Reset value																									0	0	0	0	0		0	0
0x58	**USB_BCDR**	Res.	Res.	Res.	Res.	Res.	Res.	Res.	Res.	Res.	Res.	Res.	Res.	Res.	Res.	Res.	Res.	DPPU	Res.	Res.	Res.	Res.	Res.	Res.	Res.	PS2DET	SDET	PDET	DCDET	SDEN	PDEN	DCDEN	BCDEN
	Reset value																	0								0	0	0	0	0	0	0	0

Refer to *Section 2.2.2 on page 62* for the register boundary addresses.

43 Debug support (DBG)

43.1 Overview

The STM32L431/433/443 devices are built around a Cortex®-M4 core which contains hardware extensions for advanced debugging features. The debug extensions allow the core to be stopped either on a given instruction fetch (breakpoint) or data access (watchpoint). When stopped, the core's internal state and the system's external state may be examined. Once examination is complete, the core and the system may be restored and program execution resumed.

The debug features are used by the debugger host when connecting to and debugging the STM32L431/433/443 MCUs.

Two interfaces for debug are available:

- Serial wire
- JTAG debug port

Figure 468. Block diagram of STM32 MCU and Cortex®-M4-level debug support

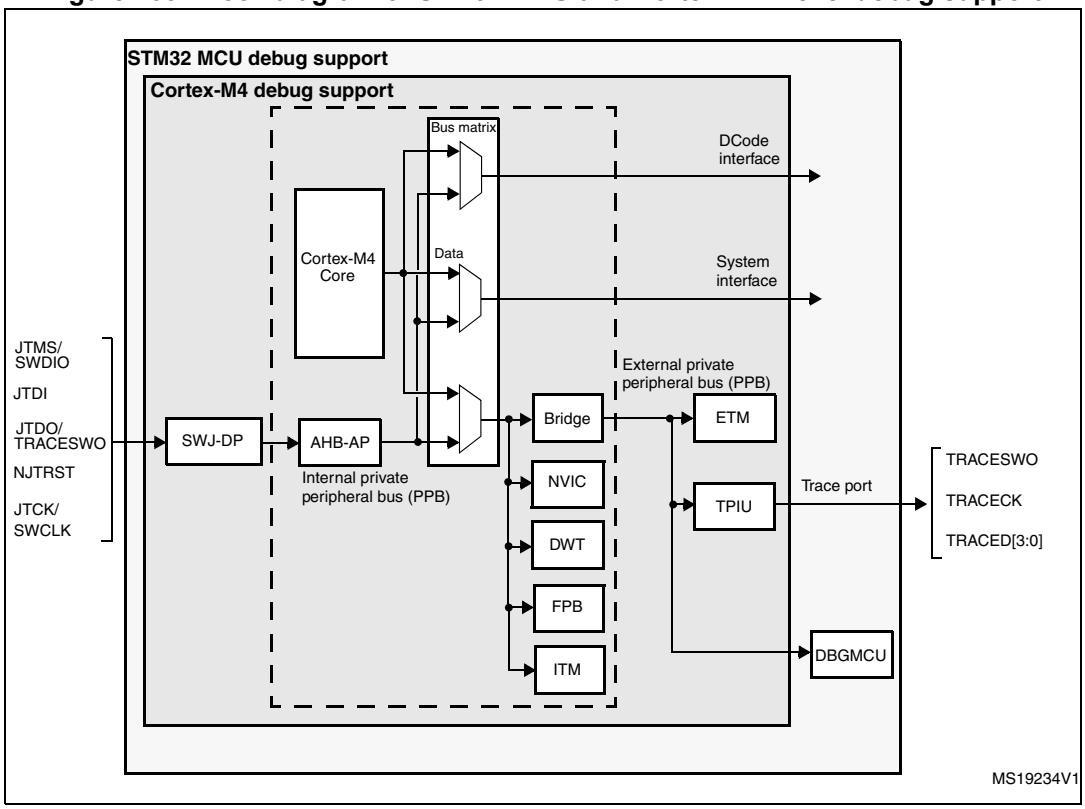

Note: The debug features embedded in the Cortex®-M4 core are a subset of the ARM® CoreSight Design Kit.

The ARM® Cortex®-M4 core provides integrated on-chip debug support. It is comprised of:

- SWJ-DP: Serial wire / JTAG debug port
- AHP-AP: AHB access port
- ITM: Instrumentation trace macrocell
- FPB: Flash patch breakpoint
- DWT: Data watchpoint trigger
- TPUI: Trace port unit interface (available on larger packages, where the corresponding pins are mapped)
- ETM: Embedded Trace Macrocell (available only on STM32L431/433/443 devices larger packages, where the corresponding pins are mapped)

It also includes debug features dedicated to the STM32L431/433/443:

- Flexible debug pinout assignment
- MCU debug box (support for low-power modes, control over peripheral clocks, etc.)

*Note: For further information on debug functionality supported by the ARM® Cortex®-M4 core, refer to the Cortex®-M4-*r0p1 *Technical Reference Manual and to the CoreSight Design Kit-r0p1 TRM (see Section 43.2: Reference ARM® documentation).*

43.2 Reference ARM® documentation

- Cortex®-M4 r0p1 Technical Reference Manual (TRM),
  search for “Cortex®-M4 Technical Reference Manual” at http://infocenter.arm.com
- ARM® Debug Interface V5
- ARM® CoreSight Design Kit revision r0p1 Technical Reference Manual

43.3 SWJ debug port (serial wire and JTAG)

The STM32L431/433/443 core integrates the Serial Wire / JTAG Debug Port (SWJ-DP). It is an ARM® standard CoreSight debug port that combines a JTAG-DP (5-pin) interface and a SW-DP (2-pin) interface.

- The JTAG Debug Port (JTAG-DP) provides a 5-pin standard JTAG interface to the AHP-AP port.
- The Serial Wire Debug Port (SW-DP) provides a 2-pin (clock + data) interface to the AHP-AP port.

In the SWJ-DP, the two JTAG pins of the SW-DP are multiplexed with some of the five JTAG pins of the JTAG-DP.

Figure 469. SWJ debug port

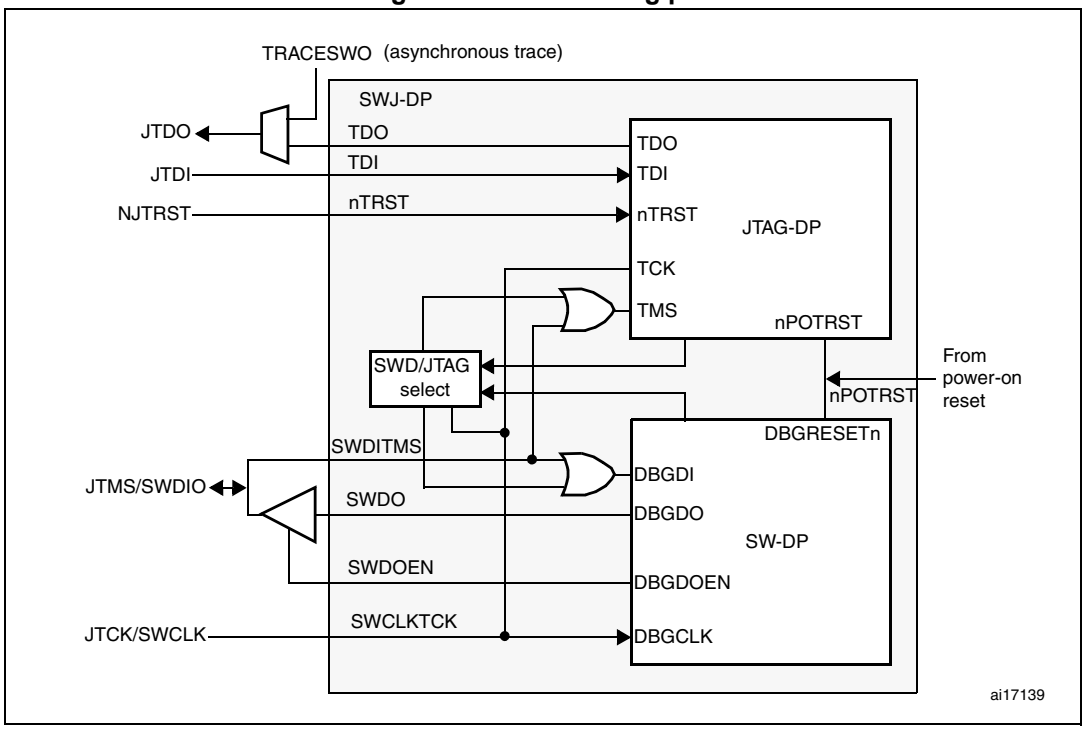

Figure 469 shows that the asynchronous TRACE output (TRACESWO) is multiplexed with TDO. This means that the asynchronous trace can only be used with SW-DP, not JTAG-DP.

43.3.1 Mechanism to select the JTAG-DP or the SW-DP

By default, the JTAG-Debug Port is active.

If the debugger host wants to switch to the SW-DP, it must provide a dedicated JTAG sequence on TMS/TCK (respectively mapped to SWDIO and SWCLK) which disables the JTAG-DP and enables the SW-DP. This way it is possible to activate the SWDP using only the SWCLK and SWDIO pins.

This sequence is:

1. Send more than 50 TCK cycles with TMS (SWDIO) =1
2. Send the 16-bit sequence on TMS (SWDIO) = 0111100111100111 (MSB transmitted first)
3. Send more than 50 TCK cycles with TMS (SWDIO) =1

43.4 Pinout and debug port pins

The STM32L431/433/443 MCUs are available in various packages with different numbers of available pins. As a result, some functionalities (ETM) related to pin availability may differ between packages.

43.4.1 SWJ debug port pins

Five pins are used as outputs from the STM32L431/433/443 for the SWJ-DP as *alternate functions* of general-purpose I/Os. These pins are available on all packages.

Table 232. SWJ debug port pins

SWJ-DP pin name	JTAG debug port		SW debug port		Pin assign ment
	Type	Description	Type	Debug assignment	
JTMS/SWDIO	I	JTAG Test Mode Selection	IO	Serial Wire Data Input/Output	PA13
JTCK/SWCLK	I	JTAG Test Clock	I	Serial Wire Clock	PA14
JTDI	I	JTAG Test Data Input	-	-	PA15
JTDO/TRACESWO	O	JTAG Test Data Output	-	TRACESWO if asynchronous trace is enabled	PB3
NJTRST	I	JTAG Test nReset	-	-	PB4

43.4.2 Flexible SWJ-DP pin assignment

After RESET (SYSRESETn or PORESETn), all five pins used for the SWJ-DP are assigned as dedicated pins immediately usable by the debugger host (note that the trace outputs are not assigned except if explicitly programmed by the debugger host).

However, the STM32L431/433/443 MCUs offer the possibility of disabling some or all of the SWJ-DP ports, and therefore the possibility of releasing the associated pins for general-purpose I/O (GPIO) usage. For more details on how to disable SWJ-DP port pins, please refer to *Section 8.3.2: I/O pin alternate function multiplexer and mapping*.

Table 233. Flexible SWJ-DP pin assignment

Available debug ports	SWJ IO pin assigned				
	PA13 / JTMS/ SWDIO	PA14 / JTCK/ SWCLK	PA15 / JTDI	PB3 / JTDO	PB4/ NJTRST
Full SWJ (JTAG-DP + SW-DP) - Reset State	X	X	X	X	X
Full SWJ (JTAG-DP + SW-DP) but without NJTRST	X	X	X	X	
JTAG-DP disabled and SW-DP enabled	X	X			
JTAG-DP disabled and SW-DP disabled	Released				

Note: When the APB bridge write buffer is full, it takes one extra APB cycle when writing the AFIO_MAPR register. This is because the deactivation of the JTAGSW pins is done in two cycles to guarantee a clean level on the nTRST and TCK input signals of the core.

- Cycle 1: the JTAGSW input signals to the core are tied to 1 or 0 (to 1 for nTRST, TDI and TMS, to 0 for TCK)
- Cycle 2: the GPIO controller takes the control signals of the SWJTAG IO pins (like controls of direction, pull-up/down, Schmitt trigger activation, etc.).

43.4.3 Internal pull-up and pull-down on JTAG pins

It is necessary to ensure that the JTAG input pins are not floating since they are directly connected to flip-flops to control the debug mode features. Special care must be taken with the SWCLK/TCK pin which is directly connected to the clock of some of these flip-flops.

To avoid any uncontrolled IO levels, the device embeds internal pull-ups and pull-downs on the JTAG input pins:

- NJTRST: internal pull-up
- JTDI: internal pull-up
- JTMS/SWDIO: internal pull-up
- TCK/SWCLK: internal pull-down

Once a JTAG IO is released by the user software, the GPIO controller takes control again. The reset states of the GPIO control registers put the I/Os in the equivalent state:

- NJTRST: input pull-up
- JTDI: input pull-up
- JTMS/SWDIO: input pull-up
- JTCK/SWCLK: input pull-down
- JTDO: input floating

The software can then use these I/Os as standard GPIOs.

Note: The JTAG IEEE standard recommends to add pull-ups on TDI, TMS and nTRST but there is no special recommendation for TCK. However, for JTCK, the device needs an integrated pull-down.

Having embedded pull-ups and pull-downs removes the need to add external resistors.

43.4.4 Using serial wire and releasing the unused debug pins as GPIOs

To use the serial wire DP to release some GPIOs, the user software must change the GPIO (PA15, PB3 and PB4) configuration mode in the GPIO_MODER register.This releases PA15, PB3 and PB4 which now become available as GPIOs.

When debugging, the host performs the following actions:

- Under system reset, all SWJ pins are assigned (JTAG-DP + SW-DP).
- Under system reset, the debugger host sends the JTAG sequence to switch from the JTAG-DP to the SW-DP.
- Still under system reset, the debugger sets a breakpoint on vector reset.
- The system reset is released and the Core halts.
- All the debug communications from this point are done using the SW-DP. The other JTAG pins can then be reassigned as GPIOs by the user software.

Note: For user software designs, note that:

To release the debug pins, remember that they will be first configured either in input-pull-up (nTRST, TMS, TDI) or pull-down (TCK) or output tristate (TDO) for a certain duration after reset until the instant when the user software releases the pins.

When debug pins (JTAG or SW or TRACE) are mapped, changing the corresponding IO pin configuration in the IOPORT controller has no effect.

43.5 STM32L431/433/443 JTAG TAP connection

The STM32L431/433/443 MCUs integrate two serially connected JTAG TAPs, the boundary scan TAP (IR is 5-bit wide) and the Cortex®-M4 TAP (IR is 4-bit wide).

To access the TAP of the Cortex®-M4 for debug purposes:

1. First, it is necessary to shift the BYPASS instruction of the boundary scan TAP.
2. Then, for each IR shift, the scan chain contains 9 bits (=5+4) and the unused TAP instruction must be shifted by using the BYPASS instruction.
3. For each data shift, the unused TAP, which is in BYPASS mode, adds 1 extra data bit in the data scan chain.

*Note: **Important**: Once Serial-Wire is selected using the dedicated ARM® JTAG sequence, the boundary scan TAP is automatically disabled (JTMS forced high).*

Figure 470. JTAG TAP connections

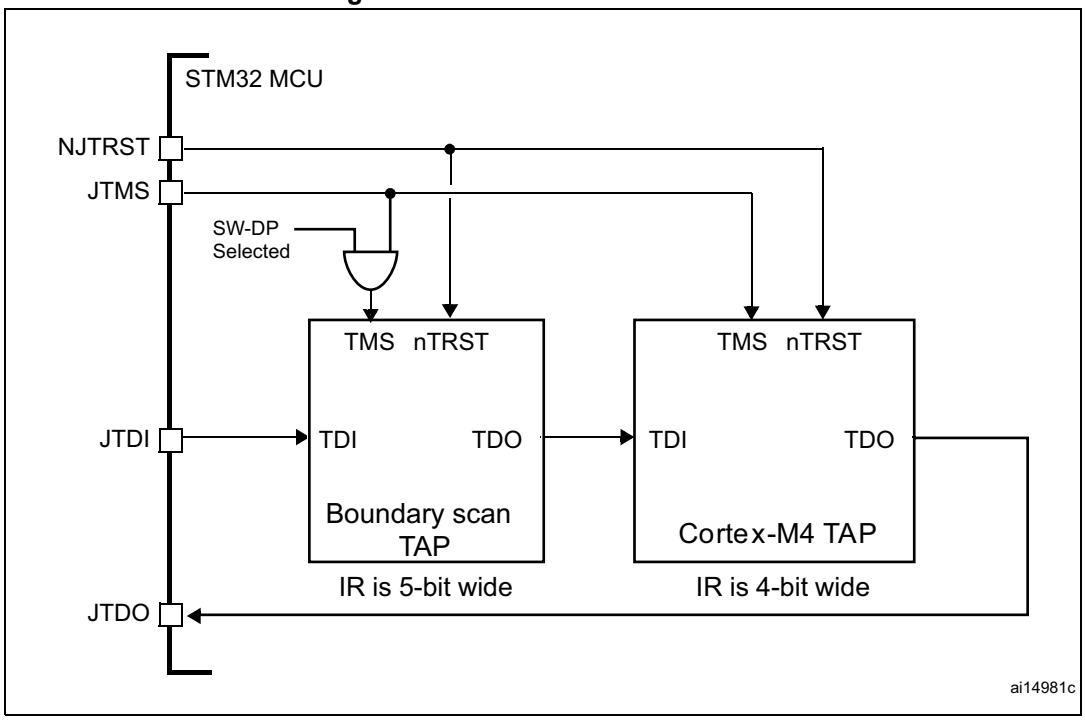

43.6 ID codes and locking mechanism

There are several ID codes inside the STM32L431/433/443 MCUs. ST strongly recommends tools designers to lock their debuggers using the MCU DEVICE ID code located in the external PPB memory map at address 0xE0042000.

43.6.1 MCU device ID code

The STM32L431/433/443 MCUs integrate an MCU ID code. This ID identifies the ST MCU part-number and the die revision. It is part of the DBG_MCU component and is mapped on the external PPB bus (see *Section 43.16 on page 1402*). This code is accessible using the JTAG debug port (4 to 5 pins) or the SW debug port (two pins) or by the user software. It is even accessible while the MCU is under system reset.

Only the DEV_ID(11:0) should be used for identification by the debugger/programmer tools.

DBGMCU_IDCODE

Address: 0xE004 2000

Only 32-bits access supported. Read-only

31	30	29	28	27	26	25	24	23	22	21	20	19	18	17	16
REV_ID															
r	r	r	r	r	r	r	r	r	r	r	r	r	r	r	r
15	14	13	12	11	10	9	8	7	6	5	4	3	2	1	0
Res.	Res.	Res.	Res.	DEV_ID											
				r	r	r	r	r	r	r	r	r	r	r	r

Bits 31:16 **REV_ID[15:0]** Revision identifier
This field indicates the revision of the device.
0x1000: Rev A
0x1001: Rev Z
Others: Reserved

Bits 15:12 Reserved, must be kept at reset value.

Bits 11:0 **DEV_ID[11:0]**: Device identifier
The device ID is: 0x435

43.6.2 Boundary scan TAP

JTAG ID code

The TAP of the STM32L431/433/443 BSC (boundary scan) integrates a JTAG ID code equal to 0x06435041.

43.6.3 Cortex®-M4 TAP

The TAP of the ARM® Cortex®-M4 integrates a JTAG ID code. This ID code is the ARM® default one and has not been modified. This code is only accessible by the JTAG Debug Port.
This code is **0x4BA00477** (corresponds to Cortex®-M4 r0p1, see *Section 43.2: Reference ARM® documentation*).

43.6.4 Cortex®-M4 JEDEC-106 ID code

The ARM® Cortex®-M4 integrates a JEDEC-106 ID code. It is located in the 4KB ROM table mapped on the internal PPB bus at address 0xE00FF000_0xE00FFFFF.

This code is accessible by the JTAG Debug Port (4 to 5 pins) or by the SW Debug Port (two pins) or by the user software.

43.7 JTAG debug port

A standard JTAG state machine is implemented with a 4-bit instruction register (IR) and five data registers (for full details, refer to the Cortex®-M4 with FPU r0p1 Technic*al Reference Manual (TRM), for references, please see Section 43.2: Reference ARM® documentation)*.

Table 234. JTAG debug port data registers

IR(3:0)	Data register	Details
1111	BYPASS [1 bit]	-
1110	IDCODE [32 bits]	ID CODE 0x3BA00477 (ARM® Cortex®-M4 r0p1-01rel0 ID Code)
1010	DPACC [35 bits]	Debug port access register This initiates a debug port and allows access to a debug port register. – When transferring data IN: Bits 34:3= DATA[31:0] = 32-bit data to transfer for a write request Bits 2:1 = A[3:2] = 2-bit address of a debug port register. Bit 0 = RnW = Read request (1) or write request (0). – When transferring data OUT: Bits 34:3 = DATA[31:0] = 32-bit data which is read following a read request Bits 2:0 = ACK[2:0] = 3-bit Acknowledge: 010 = OK/FAULT 001 = WAIT OTHER = reserved Refer to *Table 235* for a description of the A(3:2) bits
1011	APACC [35 bits]	Access port access register Initiates an access port and allows access to an access port register. – When transferring data IN: Bits 34:3 = DATA[31:0] = 32-bit data to shift in for a write request Bits 2:1 = A[3:2] = 2-bit address (sub-address AP registers). Bit 0 = RnW= Read request (1) or write request (0). – When transferring data OUT: Bits 34:3 = DATA[31:0] = 32-bit data which is read following a read request Bits 2:0 = ACK[2:0] = 3-bit Acknowledge: 010 = OK/FAULT 001 = WAIT OTHER = reserved There are many AP Registers (see AHB-AP) addressed as the combination of: – The shifted value A[3:2] – The current value of the DP SELECT register
1000	ABORT [35 bits]	Abort register – Bits 31:1 = Reserved – Bit 0 = DAPABORT: write 1 to generate a DAP abort.

Table 235. 32-bit debug port registers addressed through the shifted value A[3:2]

Address	A(3:2) value	Description
0x0	00	Reserved, must be kept at reset value.
0x4	01	DP CTRL/STAT register. Used to: – Request a system or debug power-up – Configure the transfer operation for AP accesses – Control the pushed compare and pushed verify operations – Read some status flags (overrun, power-up acknowledges)
0x8	10	DP SELECT register. Used to select the current access port and the active 4-words register window. – Bits 31:24: APSEL: select the current AP – Bits 23:8: reserved – Bits 7:4: APBANKSEL: select the active 4-words register window on the current AP – Bits 3:0: reserved
0xC	11	DP RDBUFF register: Used to allow the debugger to get the final result after a sequence of operations (without requesting new JTAG-DP operation)

43.8 SW debug port

43.8.1 SW protocol introduction

This synchronous serial protocol uses two pins:

- SWCLK: clock from host to target
- SWDIO: bidirectional

The protocol allows two banks of registers (DPACC registers and APACC registers) to be read and written to.

Bits are transferred LSB-first on the wire.

For SWDIO bidirectional management, the line must be pulled-up on the board (100 kΩ recommended by ARM®).

Each time the direction of SWDIO changes in the protocol, a turnaround time is inserted where the line is not driven by the host nor the target. By default, this turnaround time is one bit time, however this can be adjusted by configuring the SWCLK frequency.

43.8.2 SW protocol sequence

Each sequence consist of three phases:

1. Packet request (8 bits) transmitted by the host
2. Acknowledge response (3 bits) transmitted by the target
3. Data transfer phase (33 bits) transmitted by the host or the target

Table 236. Packet request (8-bits)

Bit	Name	Description
0	Start	Must be “1”
1	APnDP	0: DP Access 1: AP Access
2	RnW	0: Write Request 1: Read Request
4:3	A(3:2)	Address field of the DP or AP registers (refer to *Table 235*)
5	Parity	Single bit parity of preceding bits
6	Stop	0
7	Park	Not driven by the host. Must be read as “1” by the target because of the pull-up

Refer to the Cortex®-M4 r0p1 *TRM* for a detailed description of DPACC and APACC registers.

The packet request is always followed by the turnaround time (default 1 bit) where neither the host nor target drive the line.

Table 237. ACK response (3 bits)

Bit	Name	Description
0..2	ACK	001: FAULT 010: WAIT 100: OK

The ACK Response must be followed by a turnaround time only if it is a READ transaction or if a WAIT or FAULT acknowledge has been received.

Table 238. DATA transfer (33 bits)

Bit	Name	Description
0..31	WDATA or RDATA	Write or Read data
32	Parity	Single parity of the 32 data bits

The DATA transfer must be followed by a turnaround time only if it is a READ transaction.

43.8.3 SW-DP state machine (reset, idle states, ID code)

The State Machine of the SW-DP has an internal ID code which identifies the SW-DP. It follows the JEP-106 standard. This ID code is the default ARM® one and is set to **0x1BA01477** (corresponding to Cortex®-M4 r0p1).

Note: *Note that the SW-DP state machine is inactive until the target reads this ID code.*

- The SW-DP state machine is in RESET STATE either after power-on reset, or after the DP has switched from JTAG to SWD or after the line is high for more than 50 cycles
- The SW-DP state machine is in IDLE STATE if the line is low for at least two cycles after RESET state.
- After RESET state, it is **mandatory** to first enter into an IDLE state AND to perform a READ access of the DP-SW ID CODE register. Otherwise, the target will issue a FAULT acknowledge response on another transactions.

Further details of the SW-DP state machine can be found in the *Cortex®-M4 r0p1 TRM* and the *CoreSight Design Kit r0p1 TRM*.

43.8.4 DP and AP read/write accesses

- Read accesses to the DP are not posted: the target response can be immediate (if ACK=OK) or can be delayed (if ACK=WAIT).
- Read accesses to the AP are posted. This means that the result of the access is returned on the next transfer. If the next access to be done is NOT an AP access, then the DP-RDBUFF register must be read to obtain the result.
  The READOK flag of the DP-CTRL/STAT register is updated on every AP read access or RDBUFF read request to know if the AP read access was successful.
- The SW-DP implements a write buffer (for both DP or AP writes), that enables it to accept a write operation even when other transactions are still outstanding. If the write buffer is full, the target acknowledge response is “WAIT”. With the exception of IDCODE read or CTRL/STAT read or ABORT write which are accepted even if the write buffer is full.
- Because of the asynchronous clock domains SWCLK and HCLK, two extra SWCLK cycles are needed after a write transaction (after the parity bit) to make the write effective internally. These cycles should be applied while driving the line low (IDLE state)
  This is particularly important when writing the CTRL/STAT for a power-up request. If the next transaction (requiring a power-up) occurs immediately, it will fail.

43.8.5 SW-DP registers

Access to these registers are initiated when APnDP=0

Table 239. SW-DP registers

A(3:2)	R/W	CTRLSEL bit of SELECT register	Register	Notes
00	Read	-	IDCODE	The manufacturer code is not set to ST code **0x2BA01477** (identifies the SW-DP)
00	Write	-	ABORT	-

Table 239. SW-DP registers (continued)

A(3:2)	R/W	CTRLSEL bit of SELECT register	Register	Notes
01	Read/Write	0	DP-CTRL/STAT	Purpose is to: – request a system or debug power-up – configure the transfer operation for AP accesses – control the pushed compare and pushed verify operations. – read some status flags (overrun, power-up acknowledges)
01	Read/Write	1	WIRE CONTROL	Purpose is to configure the physical serial port protocol (like the duration of the turnaround time)
10	Read	-	READ RESEND	Enables recovery of the read data from a corrupted debugger transfer, without repeating the original AP transfer.
10	Write	-	SELECT	The purpose is to select the current access port and the active 4-words register window
11	Read/Write	-	READ BUFFER	This read buffer is useful because AP accesses are posted (the result of a read AP request is available on the next AP transaction). This read buffer captures data from the AP, presented as the result of a previous read, without initiating a new transaction

43.8.6 SW-AP registers

Access to these registers are initiated when APnDP=1

There are many AP Registers (see AHB-AP) addressed as the combination of:

- The shifted value A[3:2]
- The current value of the DP SELECT register

43.9 AHB-AP (AHB access port) - valid for both JTAG-DP and SW-DP

Features:

- System access is independent of the processor status.
- Either SW-DP or JTAG-DP accesses AHB-AP.
- The AHB-AP is an AHB master into the Bus Matrix. Consequently, it can access all the data buses (Dcode Bus, System Bus, internal and external PPB bus) but the ICode bus.
- Bitband transactions are supported.
- AHB-AP transactions bypass the FPB.

The address of the 32-bits AHP-AP resisters are 6-bits wide (up to 64 words or 256 bytes) and consists of:

e) Bits [7:4] = the bits [7:4] APBANKSEL of the DP SELECT register

f) Bits [3:2] = the 2 address bits of A(3:2) of the 35-bit packet request for SW-DP.

The AHB-AP of the Cortex®-M4 includes 9 x 32-bits registers:

Table 240. Cortex®-M4 AHB-AP registers

Address offset	Register name	Notes
0x00	AHB-AP Control and Status Word	Configures and controls transfers through the AHB interface (size, hprot, status on current transfer, address increment type
0x04	AHB-AP Transfer Address	-
0x0C	AHB-AP Data Read/Write	-
0x10	AHB-AP Banked Data 0	Directly maps the 4 aligned data words without rewriting the Transfer Address Register.
0x14	AHB-AP Banked Data 1	
0x18	AHB-AP Banked Data 2	
0x1C	AHB-AP Banked Data 3	
0xF8	AHB-AP Debug ROM Address	Base Address of the debug interface
0xFC	AHB-AP ID Register	-

Refer to the *Cortex®-M4 r0p1 TRM* for further details.

43.10 Core debug

Core debug is accessed through the core debug registers. Debug access to these registers is by means of the *Advanced High-performance Bus* (AHB-AP) port. The processor can access these registers directly over the internal *Private Peripheral Bus* (PPB).

It consists of 4 registers:

Table 241. Core debug registers

Register	Description
DHCSR	The 32-bit Debug Halting Control and Status Register: This provides status information about the state of the processor enable core debug halt and step the processor.
DCRSR	The 17-bit Debug Core Register Selector Register: This selects the processor register to transfer data to or from.
DCRDR	The 32-bit Debug Core Register Data Register: This holds data for reading and writing registers to and from the processor selected by the DCRSR (Selector) register.
DEMCR	The 32-bit Debug Exception and Monitor Control Register: This provides Vector Catching and Debug Monitor Control. This register contains a bit named ***TRCENA*** which enable the use of a TRACE.

Note: ***Important****: these registers are not reset by a system reset. They are only reset by a power-on reset.*

Refer to the *Cortex®-M4* r0p*1 TRM* for further details.

To Halt on reset, it is necessary to:

- enable the bit0 (VC_CORRESET) of the Debug and Exception Monitor Control Register
- enable the bit0 (C_DEBUGEN) of the Debug Halting Control and Status Register.

43.11 Capability of the debugger host to connect under system reset

The STM32L431/433/443 MCUs' reset system comprises the following reset sources:

- POR (power-on reset) which asserts a RESET at each power-up
- Internal watchdog reset
- Software reset
- External reset.

The Cortex®-M4 differentiates the reset of the debug part (generally PORRESETn) and the other one (SYSRESETn).

This way, it is possible for the debugger to connect under System Reset, programming the Core Debug Registers to halt the core when fetching the reset vector. Then the host can release the system reset and the core will immediately halt without having executed any instructions. In addition, it is possible to program any debug features under System Reset.

Note: *It is highly recommended for the debugger host to connect (set a breakpoint in the reset vector) under system reset.*

43.12 FPB (Flash patch breakpoint)

The FPB unit:

- implements hardware breakpoints
- patches code and data from code space to system space. This feature gives the possibility to correct software bugs located in the Code Memory Space.

The use of a Software Patch or a Hardware Breakpoint is exclusive.

The FPB consists of:

- 2 literal comparators for matching against literal loads from Code Space and remapping to a corresponding area in the System Space
- 6 instruction comparators for matching against instruction fetches from Code Space. They can be used either to remap to a corresponding area in the System Space or to generate a Breakpoint Instruction to the core.

43.13 DWT (data watchpoint trigger)

The DWT unit consists of four comparators. They are configurable as:

- a hardware watchpoint or
- a trigger to an ETM or
- a PC sampler or
- a data address sampler

The DWT also provides some means to give some profiling informations. For this, some counters are accessible to give the number of:

- Clock cycle
- Folded instructions
- Load store unit (LSU) operations
- Sleep cycles
- CPI (clock per instructions)
- Interrupt overhead

43.14 ITM (instrumentation trace macrocell)

43.14.1 General description

The ITM is an application-driven trace source that supports *printf* style debugging to trace *Operating System* (OS) and application events, and emits diagnostic system information. The ITM emits trace information as packets which can be generated as:

- **Software trace.** Software can write directly to the ITM stimulus registers to emit packets.
- **Hardware trace.** The DWT generates these packets, and the ITM emits them.
- **Time stamping.** Timestamps are emitted relative to packets. The ITM contains a 21-bit counter to generate the timestamp. The Cortex®-M4 clock or the bit clock rate of the *Serial Wire Viewer* (SWV) output clocks the counter.

The packets emitted by the ITM are output to the TPIU (Trace Port Interface Unit). The formatter of the TPIU adds some extra packets (refer to TPIU) and then output the complete packets sequence to the debugger host.

The bit TRCEN of the Debug Exception and Monitor Control Register must be enabled before you program or use the ITM.

43.14.2 Time stamp packets, synchronization and overflow packets

Time stamp packets encode time stamp information, generic control and synchronization. It uses a 21-bit timestamp counter (with possible prescalers) which is reset at each time stamp packet emission. This counter can be either clocked by the CPU clock or the SWV clock.

A synchronization packet consists of 6 bytes equal to 0x80_00_00_00_00_00 which is emitted to the TPIU as 00 00 00 00 00 80 (LSB emitted first).

A synchronization packet is a timestamp packet control. It is emitted at each DWT trigger.

For this, the DWT must be configured to trigger the ITM: the bit CYCCNTENA (bit0) of the DWT Control Register must be set. In addition, the bit2 (SYNCENA) of the ITM Trace Control Register must be set.

Note: If the SYNENA bit is not set, the DWT generates Synchronization triggers to the TPIU which will send only TPIU synchronization packets and not ITM synchronization packets.

An overflow packet consists is a special timestamp packets which indicates that data has been written but the FIFO was full.

Table 242. Main ITM registers

Address	Register	Details
@E0000FB0	ITM lock access	Write 0xC5ACCE55 to unlock Write Access to the other ITM registers
@E0000E80	ITM trace control	Bits 31-24 = Always 0
		Bits 23 = Busy
		Bits 22-16 = 7-bits ATB ID which identifies the source of the trace data
		Bits 15-10 = Always 0
		Bits 9:8 = TSPrescale = Time Stamp Prescaler
		Bits 7-5 = Reserved
		Bit 4 = SWOENA = Enable SWV behavior (to clock the timestamp counter by the SWV clock)
		Bit 3 = DWTENA: Enable the DWT Stimulus
		Bit 2 = SYNCENA: this bit must be to 1 to enable the DWT to generate synchronization triggers so that the TPIU can then emit the synchronization packets
		Bit 1 = TSENA (Timestamp Enable)
		Bit 0 = ITMENA: Global Enable Bit of the ITM
@E0000E40	ITM trace privilege	Bit 3: mask to enable tracing ports31:24
		Bit 2: mask to enable tracing ports23:16
		Bit 1: mask to enable tracing ports15:8
		Bit 0: mask to enable tracing ports7:0
@E0000E00	ITM trace enable	Each bit enables the corresponding Stimulus port to generate trace
@E0000000-E000007C	Stimulus port registers 0-31	Write the 32-bits data on the selected Stimulus Port (32 available) to be traced out

Example of configuration

To output a simple value to the TPIU:

- Configure the TPIU and assign TRACE I/Os by configuring the DBGMCU_CR (refer to *Section 43.17.2: TRACE pin assignment* and *Section 43.16.3: Debug MCU*

configuration register (DBGMCU_CR))

- Write 0xC5ACCE55 to the ITM Lock Access Register to unlock the write access to the ITM registers
- Write 0x00010005 to the ITM Trace Control Register to enable the ITM with Synchronous enabled and an ATB ID different from 0x00
- Write 0x1 to the ITM Trace Enable Register to enable the Stimulus Port 0
- Write 0x1 to the ITM Trace Privilege Register to unmask Stimulus Ports 7:0
- Write the value to output in the Stimulus Port Register 0: this can be done by software (using a printf function)

43.15 ETM (Embedded trace macrocell)

43.15.1 General description

The ETM enables the reconstruction of program execution. Data are traced using the Data Watchpoint and Trace (DWT) component or the Instruction Trace Macrocell (ITM) whereas instructions are traced using the Embedded Trace Macrocell (ETM).

The ETM transmits information as packets and is triggered by embedded resources. These resources must be programmed independently and the trigger source is selected using the Trigger Event Register (0xE0041008). An event could be a simple event (address match from an address comparator) or a logic equation between 2 events. The trigger source is one of the four comparators of the DWT module, The following events can be monitored:

- Clock cycle matching
- Data address matching

For more informations on the trigger resources refer to *Section 43.13: DWT (data watchpoint trigger)*.

The packets transmitted by the ETM are output to the TPIU (Trace Port Interface Unit). The formatter of the TPIU adds some extra packets (refer to *Section 43.17: TPIU (trace port interface unit)*) and then outputs the complete packet sequence to the debugger host.

43.15.2 Signal protocol, packet types

This part is described in the section 7 ETMv3 Signal Protocol of the ARM® IHI 0014N document.

43.15.3 Main ETM registers

For more information on registers refer to the chapter 3 of the ARM® IHI 0014N specification.

Table 243. Main ETM registers

Address	Register	Details
0xE0041FB0	ETM Lock Access	Write 0xC5ACCE55 to unlock the write access to the other ETM registers.
0xE0041000	ETM Control	This register controls the general operation of the ETM, for instance how tracing is enabled.

Table 243. Main ETM registers

Address	Register	Details
0xE0041010	ETM Status	This register provides information about the current status of the trace and trigger logic.
0xE0041008	ETM Trigger Event	This register defines the event that will control trigger.
0xE004101C	ETM Trace Enable Control	This register defines which comparator is selected.
0xE0041020	ETM Trace Enable Event	This register defines the trace enabling event.
0xE0041024	ETM Trace Start/Stop	This register defines the traces used by the trigger source to start and stop the trace, respectively.

43.15.4 Configuration example

To output a simple value to the TPIU:

- Configure the TPIU and enable the I/IO_TRACEN to assign TRACE I/Os in the STM32L431/433/443 debug configuration register
- Write 0xC5ACCE55 to the ETM Lock Access Register to unlock the write access to the ITM registers
- Write 0x00001D1E to the control register (configure the trace)
- Write 0000406F to the Trigger Event register (define the trigger event)
- Write 0000006F to the Trace Enable Event register (define an event to start/stop)
- Write 00000001 to the Trace Start/stop register (enable the trace)
- Write 0000191E to the ETM Control Register (end of configuration)

43.16 MCU debug component (DBGMCU)

The MCU debug component helps the debugger provide support for:

- Low-power modes
- Clock control for timers, watchdog, I^2C and bxCAN during a breakpoint
- Control of the trace pins assignment

43.16.1 Debug support for low-power modes

To enter low-power mode, the instruction WFI or WFE must be executed.

The MCU implements several low-power modes which can either deactivate the CPU clock or reduce the power of the CPU.

The core does not allow FCLK or HCLK to be turned off during a debug session. As these are required for the debugger connection, during a debug, they must remain active. The MCU integrates special means to allow the user to debug software in low-power modes.

For this, the debugger host must first set some debug configuration registers to change the low-power mode behavior:

- In Sleep mode, DBG_SLEEP bit of DBGMCU_CR register must be previously set by the debugger. This will feed HCLK with the same clock that is provided to FCLK (system clock previously configured by the software).
- In Stop mode, the bit DBG_STOP must be previously set by the debugger. This will enable the internal RC oscillator clock to feed FCLK and HCLK in Stop mode.
- In Standby mode, the bit DBG_STANDBY must be previously set by the debugger. This will keep the regulators on, and enable the internal RC oscillator clock to feed FCLK and HCLK in Standby mode. A system reset is generated internally so that exiting from Standby is identical than fetching from reset.

The DBGMCU_CR register can be written by the debugger under system reset. If the debugger host does not support these features, it is still possible to write this register by software.

43.16.2 Debug support for timers, RTC, watchdog, bxCAN and I^2C

During a breakpoint, it is necessary to choose how the counter of timers,RTC and watchdog should behave:

- They can continue to count inside a breakpoint. This is usually required when a PWM is controlling a motor, for example.
- They can stop to count inside a breakpoint. This is required for watchdog purposes.

For the bxCAN, the user can choose to block the update of the receive register during a breakpoint.

For the I^2C, the user can choose to block the SMBUS timeout during a breakpoint.

The DBGMCU freeze registers can be written by the debugger under system reset. If the debugger host does not support these features, it is still possible to write these registers by software.

43.16.3 Debug MCU configuration register (DBGMCU_CR)

Address: 0xE004 2004

Power-on reset: 0x0000 0000

System reset: not affected

Access: Only 32-bit access supported

31	30	29	28	27	26	25	24	23	22	21	20	19	18	17	16
Res.	Res.	Res.	Res.	Res.	Res.	Res.	Res.	Res.	Res.	Res.	Res.	Res.	Res.	Res.	Res.

15	14	13	12	11	10	9	8	7	6	5	4	3	2	1	0
Res.	Res.	Res.	Res.	Res.	Res.	Res.	Res.	TRACE_ MODE [1:0]		TRACE _ IOEN	Res..	Res.	DBG_ STAND BY	DBG_ STOP	DBG_ SLEEP
								rw	rw	rw			rw	rw	rw

Bits 31:8 Reserved, must be kept at reset value.

Bits 7:5 **TRACE_MODE[1:0] and TRACE_IOEN**: Trace pin assignment control

– With TRACE_IOEN=0:

TRACE_MODE=xx: TRACE pins not assigned (default state)

– With TRACE_IOEN=1:

  – TRACE_MODE=00: TRACE pin assignment for Asynchronous Mode
  – TRACE_MODE=01: TRACE pin assignment for Synchronous Mode with a TRACEDATA size of 1
  – TRACE_MODE=10: TRACE pin assignment for Synchronous Mode with a TRACEDATA size of 2
  – TRACE_MODE=11: TRACE pin assignment for Synchronous Mode with a TRACEDATA size of 4

Bits 4:3 Reserved, must be kept at reset value.

Bit 2 **DBG_STANDBY:** Debug Standby mode

0: (FCLK=Off, HCLK=Off) The whole digital part is unpowered.
From software point of view, exiting from Standby is identical than fetching reset vector (except a few status bit indicated that the MCU is resuming from Standby)
1: (FCLK=On, HCLK=On) In this case, the digital part is not unpowered and FCLK and HCLK are provided by the internal RC oscillator which remains active. In addition, the MCU generate a system reset during Standby mode so that exiting from Standby is identical than fetching from reset.

Bit 1 **DBG_STOP:** Debug Stop mode

0: (FCLK=Off, HCLK=Off) In STOP mode, the clock controller disables all clocks (including HCLK and FCLK). When exiting from STOP mode, the clock configuration is identical to the one after RESET (CPU clocked by the 8 MHz internal RC oscillator (HSI16)). Consequently, the software must reprogram the clock controller to enable the PLL, the Xtal, etc.
1: (FCLK=On, HCLK=On) In this case, when entering STOP mode, FCLK and HCLK are provided by the internal RC oscillator which remains active in STOP mode. When exiting STOP mode, the software must reprogram the clock controller to enable the PLL, the Xtal, etc. (in the same way it would do in case of DBG_STOP=0)

Bit 0 **DBG_SLEEP:** Debug Sleep mode

0: (FCLK=On, HCLK=Off) In Sleep mode, FCLK is clocked by the system clock as previously configured by the software while HCLK is disabled.
In Sleep mode, the clock controller configuration is not reset and remains in the previously programmed state. Consequently, when exiting from Sleep mode, the software does not need to reconfigure the clock controller.
1: (FCLK=On, HCLK=On) In this case, when entering Sleep mode, HCLK is fed by the same clock that is provided to FCLK (system clock as previously configured by the software).

43.16.4 Debug MCU APB1 freeze register1(DBGMCU_APB1FZR1)

Address: 0xE004 2008

Power on reset (POR): 0x0000 0000

System reset: not affected

Access: Only 32-bit access are supported.

31	30	29	28	27	26	25	24	23	22	21	20	19	18	17	16
LPTIM1_ STOP	Res..	Res.	Res.	Res.	Res.	DBG_ CAN_ STOP	Res.	DBG_ I2C3_ STOP	DBG_ I2C2_ STOP	DBG_ I2C1_ STOP	Res.	Res.	Res.	Res.	Res.
rw						rw		rw	rw	rw					

15	14	13	12	11	10	9	8	7	6	5	4	3	2	1	0
Res.	Res.	Res.	DBG_ IWDG_ STOP	DBG_ WWDG _STOP	DBG_ RTC_ STOP	Res.	Res.	Res.	Res.	DBG_ TIM7 _STO P	DBG_ TIM6 _STO P	Res.	Res.	Res.	DBG_ TIM2_ STOP
			rw	rw	rw					rw	rw				rw

Bit 31 **DBG_LPTIM1_STOP:** LPTIM1 counter stopped when core is halted
0: The counter clock of LPTIM1 is fed even if the core is halted
1: The counter clock of LPTIM1 is stopped when the core is halted

Bits 30:26 Reserved, must be kept at reset value.

Bit 25 **DBG_CAN_STOP:** bxCAN stopped when core is halted
0: Same behavior as in normal mode
1: The bxCAN receive registers are frozen

Bit 24 Reserved, must be kept at reset value.

Bit 23 **DBG_I2C3_STOP:** I2C3 SMBUS timeout counter stopped when core is halted
0: Same behavior as in normal mode
1: The I2C3 SMBus timeout is frozen

Bit 22 **DBG_I2C2_STOP:** I2C2 SMBUS timeout counter stopped when core is halted
0: Same behavior as in normal mode
1: The I2C2 SMBus timeout is frozen

Bit 21 **DBG_I2C1_STOP:** I2C1 SMBUS timeout counter stopped when core is halted
0: Same behavior as in normal mode
1: The I2C1 SMBus timeout is frozen

Bits 20:13 Reserved, must be kept at reset value.

Bit 12 **DBG_IWDG_STOP:** Independent watchdog counter stopped when core is halted
0: The independent watchdog counter clock continues even if the core is halted
1: The independent watchdog counter clock is stopped when the core is halted

Bit 11 **DBG_WWDG_STOP:** Window watchdog counter stopped when core is halted
0: The window watchdog counter clock continues even if the core is halted
1: The window watchdog counter clock is stopped when the core is halted

Bit 10 **DBG_RTC_STOP:** RTC counter stopped when core is halted
0: The clock of the RTC counter is fed even if the core is halted
1: The clock of the RTC counter is stopped when the core is halted

Bits 9:6 Reserved, must be kept at reset value.

Bit 5 **DBG_TIM7_STOP**: TIM7 counter stopped when core is halted
0: The counter clock of TIM7 is fed even if the core is halted
1: The counter clock of TIM7 is stopped when the core is halted

Bit 4 **DBG_TIM6_STOP**: TIM6 counter stopped when core is halted
0: The counter clock of TIM6 is fed even if the core is halted
1: The counter clock of TIM6 is stopped when the core is halted

Bits 3:1 Reserved, must be kept at reset value.

Bit 0 **DBG_TIM2_STOP:** TIM2 counter stopped when core is halted
0: The counter clock of TIM2 is fed even if the core is halted
1: The counter clock of TIM2 is stopped when the core is halted

43.16.5 Debug MCU APB1 freeze register 2 (DBGMCU_APB1FZR2)

Address: 0xE004 200C

Power on reset (POR): 0x0000 0000

System reset: not affected

Access: Only 32-bit access are supported.

31	30	29	28	27	26	25	24	23	22	21	20	19	18	17	16
Res.	Res.	Res.	Res.	Res.	Res.	Res.	Res.	Res.	Res.	Res.	Res.	Res.	Res.	Res.	Res.
15	**14**	**13**	**12**	**11**	**10**	**9**	**8**	**7**	**6**	**5**	**4**	**3**	**2**	**1**	**0**
Res.	Res.	Res.	Res.	Res.	Res.	Res.	Res.	Res.	Res.	DBG_ LPTIM2 _STOP	Res.	Res.	Res.	Res.	Res.
										rw					

Bits 31:6 Reserved, must be kept at reset value.

Bit 5 **DBG_LPTIM2_STOP:** LPTIM2 counter stopped when core is halted
0: The counter clock of LPTIM2 is fed even if the core is halted
1: The counter clock of LPTIM2 is stopped when the core is halted

Bits 4:0 Reserved, must be kept at reset value.

43.16.6 Debug MCU APB2 freeze register (DBGMCU_APB2FZR)

Address: 0xE004 2010

Power on reset (POR): 0x0000 0000

System reset: not affected

Access: Only 32-bit access are supported.

31	30	29	28	27	26	25	24	23	22	21	20	19	18	17	16
Res.	Res.	Res.	Res.	Res.	Res.	Res.	Res.	Res.	Res.	Res.	Res.	Res.	Res.	DBG_TI M16_ST OP	DBG_TI M15_ST OP
														rw	rw
15	**14**	**13**	**12**	**11**	**10**	**9**	**8**	**7**	**6**	**5**	**4**	**3**	**2**	**1**	**0**
Res.	Res.	Res.	Res.	DBG_ TIM1_ STOP	Res.	Res.	Res.	Res.	Res.	Res.	Res.	Res.	Res.	Res.	Res.
				rw											

Bits 31:18 Reserved, must be kept at reset value.

Bit 17 **DBG_TIM16_STOP:** TIM16 counter stopped when core is halted

0: The clock of the TIM16 counter is fed even if the core is halted
1: The clock of the TIM16 counter is stopped when the core is halted

Bit 16 **DBG_TIM15_STOP:** TIM15 counter stopped when core is halted

0: The clock of the TIM15 counter is fed even if the core is halted
1: The clock of the TIM15 counter is stopped when the core is halted

Bits 15:12 Reserved, must be kept at reset value.

Bit 11 **DBG_TIM1_STOP:** TIM1 counter stopped when core is halted

0: The clock of the TIM1 counter is fed even if the core is halted
1: The clock of the TIM1 counter is stopped when the core is halted

Bits 10:0 Reserved, must be kept at reset value.

43.17 TPIU (trace port interface unit)

43.17.1 Introduction

The TPIU acts as a bridge between the on-chip trace data from the ITM and the ETM.

The output data stream encapsulates the trace source ID, that is then captured by a *trace port analyzer* (TPA).

The core embeds a simple TPIU, especially designed for low-cost debug (consisting of a special version of the CoreSight TPIU).

Figure 471. TPIU block diagram

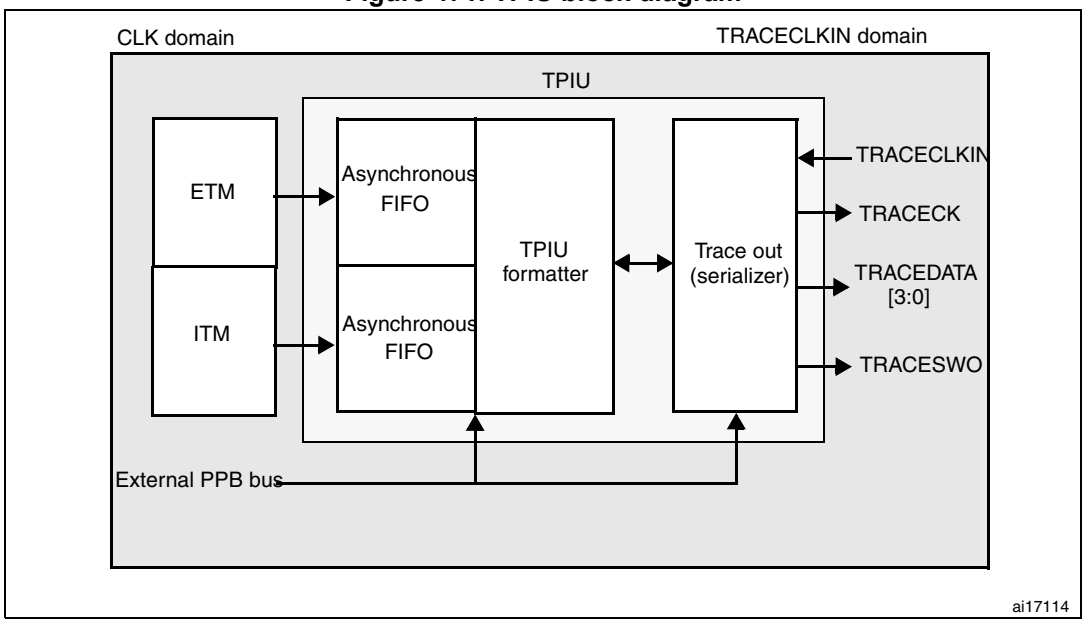

43.17.2 TRACE pin assignment

- Asynchronous mode

  The asynchronous mode requires 1 extra pin and is available on all packages. It is only available if using Serial Wire mode (not in JTAG mode).

Table 244. Asynchronous TRACE pin assignment

TPUI pin name	Trace synchronous mode		STM32L431/433/443 pin assignment
	Type	Description	
TRACESWO	O	TRACE Asynchronous Data Output	PB3

- Synchronous mode

  The synchronous mode requires from 2 to 6 extra pins depending on the data trace size and is only available in the larger packages. In addition it is available in JTAG mode and in Serial Wire mode and provides better bandwidth output capabilities than asynchronous trace.

Table 245. Synchronous TRACE pin assignment

TPUI pin name	Trace synchronous mode		STM32L431/433/443 pin assignment
	Type	Description	
TRACECK	O	TRACE Clock	PE2
TRACED[3:0]	O	TRACE Synchronous Data Outputs Can be 1, 2 or 4.	PE[6:3]

TPUI TRACE pin assignment

By default, these pins are NOT assigned. They can be assigned by setting the TRACE_IOEN and TRACE_MODE bits in the *Debug MCU configuration register (DBGMCU_CR)*. This configuration has to be done by the debugger host.

In addition, the number of pins to assign depends on the trace configuration (asynchronous or synchronous).

- **Asynchronous mode**: 1 extra pin is needed
- **Synchronous mode**: from 2 to 5 extra pins are needed depending on the size of the data trace port register (1, 2 or 4) :
  - TRACECK
  - TRACED(0) if port size is configured to 1, 2 or 4
  - TRACED(1) if port size is configured to 2 or 4
  - TRACED(2) if port size is configured to 4
  - TRACED(3) if port size is configured to 4

To assign the TRACE pin, the debugger host must program the bits TRACE_IOEN and TRACE_MODE[1:0] of the *Debug MCU configuration register (DBGMCU_CR)*. By default the TRACE pins are not assigned.

This register is mapped on the external PPB and is reset by the PORESET (and not by the SYSTEM reset). It can be written by the debugger under SYSTEM reset.

Table 246. Flexible TRACE pin assignment

DBGMCU_CR register		Pins assigned for:	TRACE IO pin assigned					
TRACE_IOEN	TRACE_MODE [1:0]		PB3 / JTDO/ TRACESWO	PE2 / TRACECK	PE3 / TRACED[0]	PE4 / TRACED[1]	PE5 / TRACED[2]	PE6 / TRACED[3]
0	XX	No Trace (default state)	Released (1)	-				
1	00	Asynchronous Trace	TRACESWO	-	-	Released (usable as GPIO)		

Table 246. Flexible TRACE pin assignment (continued)

DBGMCU_CR register		Pins assigned for:	TRACE IO pin assigned					
TRACE _IOEN	TRACE _MODE [1:0]		**PB3** / JTDO/ TRACESWO	**PE2** / TRACECK	**PE3** / TRACED[0]	**PE4** / TRACED[1]	**PE5** / TRACED[2]	**PE6** / TRACED[3]
1	01	Synchronous Trace 1 bit	Released (1)	TRACECK	TRACED[0]	-	-	-
1	10	Synchronous Trace 2 bit		TRACECK	TRACED[0]	TRACED[1]	-	-
1	11	Synchronous Trace 4 bit		TRACECK	TRACED[0]	TRACED[1]	TRACED[2]	TRACED[3]

1. When Serial Wire mode is used, it is released, but when JTAG is used, it is assigned to JTDO.

Note: By default, the TRACECLKIN input clock of the TPIU is tied to GND. It is assigned to HCLK two clock cycles after the bit TRACE_IOEN has been set.

The debugger must then program the Trace Mode by writing the PROTOCOL[1:0] bits in the SPP_R (Selected Pin Protocol) register of the TPIU.

- PROTOCOL=00: Trace Port Mode (synchronous)
- PROTOCOL=01 or 10: Serial Wire (Manchester or NRZ) Mode (asynchronous mode). Default state is 01

It then also configures the TRACE port size by writing the bits [3:0] in the CPSPS_R (Current Synchronous Port Size Register) of the TPIU:

- 0x1 for 1 pin (default state)
- 0x2 for 2 pins
- 0x8 for 4 pins

43.17.3 TPUI formatter

The formatter protocol outputs data in 16-byte frames:

- seven bytes of data
- eight bytes of mixed-use bytes consisting of:
  - 1 bit (LSB) to indicate it is a DATA byte (‘0) or an ID byte (‘1).
  - 7 bits (MSB) which can be data or change of source ID trace.
- one byte of auxiliary bits where each bit corresponds to one of the eight mixed-use bytes:
  - if the corresponding byte was a data, this bit gives bit0 of the data.
  - if the corresponding byte was an ID change, this bit indicates when that ID change takes effect.

Note: Refer to the ARM® CoreSight Architecture Specification v1.0 (ARM IHI 0029B) for further information

43.17.4 TPUI frame synchronization packets

The TPUI can generate two types of synchronization packets:

- The Frame Synchronization packet (or Full Word Synchronization packet)

  It consists of the word: 0x7F_FF_FF_FF (LSB emitted first). This sequence can not occur at any other time provided that the ID source code 0x7F has not been used.

  It is output periodically ***between*** frames.

  In continuous mode, the TPA must discard all these frames once a synchronization frame has been found.
- The Half-Word Synchronization packet

  It consists of the half word: 0x7F_FF (LSB emitted first).

  It is output periodically ***between or within*** frames.

  These packets are only generated in continuous mode and enable the TPA to detect that the TRACE port is in IDLE mode (no TRACE to be captured). When detected by the TPA, it must be discarded.

43.17.5 Transmission of the synchronization frame packet

There is no Synchronization Counter register implemented in the TPIU of the core. Consequently, the synchronization trigger can only be generated by the **DWT**. Refer to the registers DWT Control Register (bits SYNCTAP[11:10]) and the DWT Current PC Sampler Cycle Count Register.

The TPUI Frame synchronization packet (0x7F_FF_FF_FF) is emitted:

- after each TPIU reset release. This reset is synchronously released with the rising edge of the TRACECLKIN clock. This means that this packet is transmitted when the TRACE_IOEN bit in the DBGMCU_CFG register is set. In this case, the word 0x7F_FF_FF_FF is not followed by any formatted packet.
- at each DWT trigger (assuming DWT has been previously configured). Two cases occur:
  - If the bit SYNENA of the ITM is reset, only the word 0x7F_FF_FF_FF is emitted without any formatted stream which follows.
  - If the bit SYNENA of the ITM is set, then the ITM synchronization packets will follow (0x80_00_00_00_00_00), formatted by the TPUI (trace source ID added).

43.17.6 Synchronous mode

The trace data output size can be configured to 4, 2 or 1 pin: TRACED(3:0)

The output clock is output to the debugger (TRACECK)

Here, TRACECLKIN is driven internally and is connected to HCLK only when TRACE is used.

Note: In this synchronous mode, it is not required to provide a stable clock frequency.

The TRACE I/Os (including TRACECK) are driven by the rising edge of TRACLKIN (equal to HCLK). Consequently, the output frequency of TRACECK is equal to HCLK/2.

43.17.7 Asynchronous mode

This is a low cost alternative to output the trace using only 1 pin: this is the asynchronous output pin TRACESWO. Obviously there is a limited bandwidth.

TRACESWO is multiplexed with JTDO when using the SW-DP pin. This way, this functionality is available in all STM32L431/433/443 packages.

This asynchronous mode requires a constant frequency for TRACECLKIN. For the standard UART (NRZ) capture mechanism, 5% accuracy is needed. The Manchester encoded version is tolerant up to 10%.

43.17.8 TRACECLKIN connection inside the STM32L431/433/443

In the STM32L431/433/443, this TRACECLKIN input is internally connected to HCLK. This means that when in asynchronous trace mode, the application is restricted to use time frames where the CPU frequency is stable.

Note: ***Important:*** *when using asynchronous trace: it is important to be aware that:*

The default clock of the STM32L431/433/443 MCUs is the internal RC oscillator. Its frequency under reset is different from the one after reset release. This is because the RC calibration is the default one under system reset and is updated at each system reset release.

Consequently, the trace port analyzer (TPA) should not enable the trace (with the TRACE_IOEN bit) under system reset, because a Synchronization Frame Packet will be issued with a different bit time than trace packets which will be transmitted after reset release.

43.17.9 TPIU registers

The TPIU APB registers can be read and written only if the bit TRCENA of the Debug Exception and Monitor Control Register (DEMCR) is set. Otherwise, the registers are read as zero (the output of this bit enables the PCLK of the TPIU).

Table 247. Important TPIU registers

Address	Register	Description
0xE0040004	Current port size	Allows the trace port size to be selected: Bit 0: Port size = 1 Bit 1: Port size = 2 Bit 2: Port size = 3, not supported Bit 3: Port Size = 4 Only 1 bit must be set. By default, the port size is one bit. (0x00000001)
0xE00400F0	Selected pin protocol	Allows the Trace Port Protocol to be selected: Bit1:0 = 00: Synchronous Trace Port Mode 01: Serial Wire Output - manchester (default value) 10: Serial Wire Output - NRZ 11: reserved
0xE0040304	Formatter and flush control	Bit 31-9 = always ‘0’ Bit 8 = TrigIn = always ‘1’ to indicate that triggers are indicated Bit 7-4 = always 0 Bit 3-2 = always 0 Bit 1 = EnFCont. In Synchronous Trace mode (Select_Pin_Protocol register bit1:0 = 00), this bit is forced to ‘1’: the formatter is automatically enabled in continuous mode. In asynchronous mode (Select_Pin_Protocol register bit1:0 <> 00), this bit can be written to activate or not the formatter. Bit 0 = always ‘0’ The resulting default value is 0x102 **Note:** In synchronous mode, because the TRACECTL pin is not mapped outside the chip, the formatter is always enabled in continuous mode; this way the formatter inserts some control packets to identify the source of the trace packets).
0xE0040300	Formatter and flush status	Not used in Cortex®-M4, always read as 0x00000008

43.17.10 Example of configuration

- Set the bit TRCENA in the Debug Exception and Monitor Control Register (DEMCR)
- Write the TPIU Current Port Size Register to the desired value (default is 0x1 for a 1-bit port size)
- Write TPIU Formatter and Flush Control Register to 0x102 (default value)
- Write the TPIU Select Pin Protocol to select the synchronous or asynchronous mode. Example: 0x2 for asynchronous NRZ mode (UART like)
- Write the DBGMCU control register to 0x20 (bit IO_TRACEN) to assign TRACE I/Os for asynchronous mode. A TPIU Synchronous packet is emitted at this time (FF_FF_FF_7F)
- Configure the ITM and write the ITM Stimulus register to output a value

43.18 DBG register map

The following table summarizes the Debug registers

Table 248. DBG register map and reset values

Addr.	Register	31	30	29	28	27	26	25	24	23	22	21	20	19	18	17	16	15	14	13	12	11	10	9	8	7	6	5	4	3	2	1	0
0xE0042000	DBGMCU_ IDCODE	REV_ID																Res.	Res.	Res.	Res.	DEV_ID											
	Reset value(1)	X	X	X	X	X	X	X	X	X	X	X	X	X	X	X	X					X	X	X	X	X	X	X	X	X	X	X	X
0xE0042004	DBGMCU_CR	Res.	Res.	Res.	Res.	Res.	Res.	Res.	Res.	Res.	Res.	Res.	Res.	Res.	Res.	Res.	Res.	Res.	Res.	Res.	Res.	Res.	Res.	Res.	Res.	TRACE_MODE[1:0]		TRACE_IOEN	Res.	Res.	DBG_STANDBY	DBG_STOP	DBG_SLEEP
	Reset value																									0	0	0			0	0	0
0xE004 2008	DBGMCU_ APB1FZR1	DBG_LPTIM1_STOP	Res.	Res.	Res.	Res.	Res.	DBG_CAN_STOP	Res.	DBG_I2C3_STOP	DBG_I2C2_STOP	DBG_I2C1_STOP	Res.	Res.	Res.	Res.	Res.	Res.	Res.	Res.	DBG_IWDG_STOP	DBG_WWDG_STOP	DBG_RTC_STOP	Res.	Res.	Res.	Res.	DBG_TIM7_STOP	DBG_TIM6_STOP	Res.	Res.	Res.	DBG_TIM2_STOP
	Reset value	0						0		0	0	0									0	0	0					0	0				0
0xE004 200C	DBGMCU_ APB1FZR2	Res.	Res.	Res.	Res.	Res.	Res.	Res.	Res.	Res.	Res.	Res.	Res.	Res.	Res.	Res.	Res.	Res.	Res.	Res.	Res.	Res.	Res.	Res.	Res.	Res.	Res.	DBG_LPTIM2_STOP	Res.	Res.	Res.	Res.	Res.
	Reset value																											0					
0xE004 2010	DBGMCU_ APB2FZR	Res.	Res.	Res.	Res.	Res.	Res.	Res.	Res.	Res.	Res.	Res.	Res.	Res.	Res.	DBG_TIM16_STOP	DBG_TIM15_STOP	Res.	Res.	Res.	Res.	DBG_TIM1_STOP	Res.	Res.	Res.	Res.	Res.	Res.	Res.	Res.	Res.	Res.	Res.
	Reset value															0	0					0											

1. The reset value is product dependent. For more information, refer to *Section 43.6.1: MCU device ID code*.

44 Device electronic signature

The device electronic signature is stored in the System memory area of the Flash memory module, and can be read using the debug interface or by the CPU. It contains factory-programmed identification and calibration data that allow the user firmware or other external devices to automatically match to the characteristics of the STM32L431/433/443 microcontroller.

44.1 Unique device ID register (96 bits)

The unique device identifier is ideally suited:

- for use as serial numbers (for example USB[a] string serial numbers or other end applications)
- for use as part of the security keys in order to increase the security of code in Flash memory while using and combining this unique ID with software cryptographic primitives and protocols before programming the internal Flash memory
- to activate secure boot processes, etc.

The 96-bit unique device identifier provides a reference number which is unique for any device and in any context. These bits cannot be altered by the user.

Base address: 0x1FFF 7590

Address offset: 0x00

Read only = 0xXXXX XXXX where X is factory-programmed

31	30	29	28	27	26	25	24	23	22	21	20	19	18	17	16
UID[31:16]															
r	r	r	r	r	r	r	r	r	r	r	r	r	r	r	r
15	14	13	12	11	10	9	8	7	6	5	4	3	2	1	0
UID[15:0]															
r	r	r	r	r	r	r	r	r	r	r	r	r	r	r	r

Bits 31:0 **UID[31:0]:** X and Y coordinates on the wafer

a. Not available for STM32L431xx devices.

Address offset: 0x04

Read only = 0xXXXX XXXX where X is factory-programmed

31	30	29	28	27	26	25	24	23	22	21	20	19	18	17	16
UID[63:48]															
r	r	r	r	r	r	r	r	r	r	r	r	r	r	r	r
15	14	13	12	11	10	9	8	7	6	5	4	3	2	1	0
UID[47:32]															
r	r	r	r	r	r	r	r	r	r	r	r	r	r	r	r

Bits 31:8 **UID[63:40]:** LOT_NUM[23:0]
Lot number (ASCII encoded)

Bits 7:0 **UID[39:32]:** WAF_NUM[7:0]
Wafer number (8-bit unsigned number)

Address offset: 0x08

Read only = 0xXXXX XXXX where X is factory-programmed

31	30	29	28	27	26	25	24	23	22	21	20	19	18	17	16
UID[95:80]															
r	r	r	r	r	r	r	r	r	r	r	r	r	r	r	r
15	14	13	12	11	10	9	8	7	6	5	4	3	2	1	0
UID[79:64]															
r	r	r	r	r	r	r	r	r	r	r	r	r	r	r	r

Bits 31:0 **UID[95:64]:** LOT_NUM[55:24]
Lot number (ASCII encoded)

44.2 Flash size data register

Base address: 0x1FFF 75E0

Address offset: 0x00

Read only = 0xXXXX where X is factory-programmed

15	14	13	12	11	10	9	8	7	6	5	4	3	2	1	0
FLASH_SIZE															
r	r	r	r	r	r	r	r	r	r	r	r	r	r	r	r

Bits 15:0 **FLASH_SIZE[15:0]**: Flash memory size
This bitfield indicates the size of the device Flash memory expressed in Kbytes.
As an example, 0x040 corresponds to 64 Kbytes.

44.3 Package data register

Base address: 0x1FFF 7500

Address offset: 0x00

Read only = 0xXXXX where X is factory-programmed

15	14	13	12	11	10	9	8	7	6	5	4	3	2	1	0
Res.	Res.	Res.	Res.	Res.	Res.	Res.	Res.	Res.	Res.	Res.	PKG[4:0]				
											r	r	r	r	r

Bits 15:5 Reserved, must be kept at reset value

Bits 4:0 **PKG[4:0]**: Package type

00000: LQFP64
00001: WLCSP64
00010: LQFP100
01010: UFQFPN48
01011: LQFP48
01100: WLCSP49
01101: UFBGA64
01110: UFBGA100
Others: reserved

Index

A

ADCx_AWD2CR 457
ADCx_AWD3CR 458
ADCx_CALFACT 459
ADCx_CCR 462
ADCx_CDR 465
ADCx_CFGR 442
ADCx_CFGR2 446
ADCx_CR 439
ADCx_CSR 460
ADCx_DIFSEL 458
ADCx_DR 454
ADCx_IER 437
ADCx_ISR 435
ADCx_JDRy 457
ADCx_JSQR 454
ADCx_OFRy 456
ADCx_SMPR1 447
ADCx_SMPR2 448
ADCx_SQR1 450
ADCx_SQR2 451
ADCx_SQR3 452
ADCx_SQR4 454
ADCx_TR1 448
ADCx_TR2 449
ADCx_TR3 450
AES_CR 606
AES_DINR 610
AES_DOUTR 610
AES_IVR0 612
AES_IVR1 613
AES_IVR2 614
AES_IVR3 614
AES_KEYR0 611
AES_KEYR1 611
AES_KEYR2 612
AES_KEYR3 612
AES_KEYR4 614
AES_KEYR5 615
AES_KEYR6 615
AES_KEYR7 615
AES_SR 608
AES_SUSPxR 617

C

CAN_BTR 1335
CAN_ESR 1334
CAN_FA1R 1345
CAN_FFA1R 1345
CAN_FiRx 1346
CAN_FM1R 1344
CAN_FMR 1343
CAN_FS1R 1344
CAN_IER 1333
CAN_MCR 1326
CAN_MSR 1328
CAN_RDHxR 1342
CAN_RDLxR 1342
CAN_RDTxR 1341
CAN_RF0R 1331
CAN_RF1R 1332
CAN_RIxR 1340
CAN_TDHxR 1339
CAN_TDLxR 1339
CAN_TDTxR 1338
CAN_TIxR 1337
CAN_TSR 1329
COMP1_CSR 511
COMP2_CSR 513
CRC_CR 325
CRC_DR 324
CRC_IDR 325
CRC_INIT 326
CRC_POL 326
CRS_CFGR 239
CRS_CR 238
CRS_ICR 242
CRS_ISR 240

D

DAC_CCR 494
DAC_CR 486
DAC_DHR12L1 489
DAC_DHR12L2 491
DAC_DHR12LD 492
DAC_DHR12R1 489
DAC_DHR12R2 490
DAC_DHR12RD 491
DAC_DHR8R1 490
DAC_DHR8R2 491
DAC_DHR8RD 492
DAC_DOR1 493
DAC_DOR2 493
DAC_MCR 495
DAC_SHHR 497

DAC_SHRR 498
DAC_SHSR1 496
DAC_SHSR2 497
DAC_SR 493
DAC_SWTRIGR 489
DBGMCU_APB1FZR1 1404
DBGMCU_APB1FZR2 1406
DBGMCU_APB2FZR 1406
DBGMCU_CR 1403
DBGMCU_IDCODE 1391
DMA_CCRx 293
DMA_CMARx 296
DMA_CNDTRx 295
DMA_CPARx 295
DMA_IFCR 292
DMA_ISR 291
DMA1_CSELR 297
DMA2_CSELR 299

E

EXTI_EMR1 314
EXTI_EMR2 318
EXTI_FTSR1 315
EXTI_FTSR2 319
EXTI_IMR1 314
EXTI_IMR2 317
EXTI_PR1 317
EXTI_PR2 320
EXTI_RTSR1 315
EXTI_RTSR2 318
EXTI_SWIER1 316
EXTI_SWIER2 319

F

FLASH_ACR 95
FLASH_CR 100
FLASH_ECCR 101
FLASH_KEYR 97
FLASH_OPTKEYR 97
FLASH_OPTR 102
FLASH_PCROP1ER 104
FLASH_PCROP1SR 104
FLASH_PDKEYR 96
FLASH_SR 98
FLASH_WRP1AR 105
FLASH_WRP1BR 105
FMPI2C_ISR 1026
FW_CR 119
FW_CSL 116
FW_CSSA 116
FW_NVDSL 117
FW_NVDSSA 117
FW_VDSL 118
FW_VDSSA 118

G

GPIOx_AFRH 259
GPIOx_AFRL 258
GPIOx_BRR 259
GPIOx_BSRR 256
GPIOx_IDR 256
GPIOx_LCKR 257
GPIOx_MODER 254
GPIOx_ODR 256
GPIOx_OSPEEDR 255
GPIOx_OTYPER 254
GPIOx_PUPDR 255

I

I2C_CR1 1016
I2C_CR2 1019
I2C_ICR 1028
I2C_ISR 1026
I2C_OAR1 1022
I2C_OAR2 1023
I2C_PECR 1029
I2C_RXDR 1030
I2C_TIMEOUTR 1025
I2C_TIMINGR 1024
I2C_TXDR 1030
I2Cx_CR2 . . . . . 116-119, 1019
IWDG_KR 905
IWDG_PR 906
IWDG_RLR 907
IWDG_SR 908
IWDG_WINR 909

L

LCD_CLR 555
LCD_CR 550
LCD_RAM 556
LPTIM_ARR 897
LPTIM_CFGR 893
LPTIM_CMP 897
LPTIM_CNT 898
LPTIM_CR 896
LPTIM_ICR 891
LPTIM_IER 892
LPTIM_ISR 890
LPTIM1_OR 898
LPTIM2_OR 898

LPUART_BRR 1135
LPUART_CR1 1128
LPUART_CR2 1131
LPUART_CR3 1133
LPUART_ICR 1139
LPUART_ISR 1136
LPUART_RDR 1140
LPUART_RQR 1135
LPUART_TDR 1140

O

OPAMP1_CSR 525
OPAMP1_LPOTR 526
OPAMP1_OTR 526

P

purpose 786
PWR_CR1 148
PWR_CR2 149
PWR_CR3 150
PWR_CR4 151
PWR_PDCRA 156
PWR_PDCRB 157
PWR_PDCRC 158
PWR_PDCRD 159
PWR_PDCRE 160
PWR_PDCRH 161
PWR_PUCRA 155
PWR_PUCRB 156
PWR_PUCRC 157
PWR_PUCRD 158
PWR_PUCRE 159
PWR_PUCRH 160
PWR_SCR 154
PWR_SR1 152
PWR_SR2 153

Q

QUADSPI _PIR 354
QUADSPI _PSMAR 353
QUADSPI _PSMKR 353
QUADSPI_ABR 352
QUADSPI_AR 351
QUADSPI_CCR 349
QUADSPI_CR 343
QUADSPI_DCR 346
QUADSPI_DLR 349
QUADSPI_DR 352
QUADSPI_FCR 348
QUADSPI_LPTR 354
QUADSPI_SR 347

R

RCC_AHB1ENR 205
RCC_AHB1RSTR 197
RCC_AHB1SMENR 213
RCC_AHB2ENR 206
RCC_AHB2RSTR 198
RCC_AHB2SMENR 214
RCC_AHB3ENR 207
RCC_AHB3RSTR 200
RCC_AHB3SMENR 215
RCC_APB1ENR1 208
RCC_APB1ENR2 210
RCC_APB1RSTR1 200
RCC_APB1RSTR2 203
RCC_APB1SMENR1 216
RCC_APB1SMENR2 218
RCC_APB2ENR 212
RCC_APB2RSTR 203
RCC_APB2SMENR 220
RCC_BDCR 223
RCC_CCIPR 221
RCC_CFGR 185
RCC_CICR 196
RCC_CIER 193
RCC_CIFR 195
RCC_CR 182
RCC_CRRCR 227
RCC_CSR 225
RCC_ICSCR 185
RCC_PLLCFGR 187
RCC_PLLSAI1CFGR 190
RNG_CR 580
RNG_DR 581
RNG_SR 580
RTC_ALRMAR 947
RTC_ALRMBR 948
RTC_ALRMBSSR 959
RTC_BKPxR 960
RTC_CALR 954
RTC_CR 939
RTC_DR 937
RTC_ISR 942
RTC_OR 960
RTC_PRER 945
RTC_SHIFTR 950
RTC_SSR 949
RTC_TR 936
RTC_TSDR 952
RTC_TSSSR 953

RTC_TSTR 951
RTC_WPR 949
RTC_WUTR 946

S

SAI_ACLRFR 1215
SAI_ACR1 1204
SAI_ACR2 1207
SAI_ADR 1216
SAI_AFRCR 1209
SAI_AIM 1212
SAI_ASLOTR 1210
SAI_ASR 1213
SAI_BCLRFR 1215
SAI_BCR1 1204
SAI_BCR2 1207
SAI_BDR 1216
SAI_BFRCR 1209
SAI_BIM 1212
SAI_BSLOTR 1210
SAI_BSR 1213
SAI_GCR 1204
SDMMC_ARG 1293
SDMMC_CLKCR 1291
SDMMC_DCOUNT 1298
SDMMC_DCTRL 1296
SDMMC_DLEN 1296
SDMMC_DTIMER 1295
SDMMC_FIFO 1304
SDMMC_ICR 1299
SDMMC_MASK 1301
SDMMC_POWER 1291
SDMMC_RESPCMD 1294
SDMMC_RESPx 1294
SDMMC_STA 1298
SMPMI_IER 1243
SPIx_CR1 1169
SPIx_CR2 1171
SPIx_CRCPR 1174
SPIx_DR 1174
SPIx_RXCRCR 1175
SPIx_SR 1173
SPIx_TXCRCR 1175
SWPMI_BRR 1239
SWPMI_CR 1237
SWPMI_ICR 1242
SWPMI_ISR 1240
SWPMI_OR 1247
SWPMI_RDR 1246
SWPMI_RFL 1244
SWPMI_TDR 1245
SYSCFG_CFGR1 263
SYSCFG_CFGR2 271
SYSCFG_EXTICR1 264
SYSCFG_EXTICR2 266
SYSCFG_EXTICR3 267
SYSCFG_EXTICR4 269
SYSCFG_MEMRMP 262
SYSCFG_SCSR 270
SYSCFG_SKR 272
SYSCFG_SWPR 272

T

TIM1_OR1 707
TIM1_OR2 710
TIM1_OR3 711
TIM15_ARR 836
TIM15_BDTR 838
TIM15_CCER 833
TIM15_CCMR1 830
TIM15_CCR1 837
TIM15_CCR2 838
TIM15_CNT 836
TIM15_CR1 822
TIM15_CR2 823
TIM15_DCR 840
TIM15_DIER 826
TIM15_DMAR 840
TIM15_EGR 829
TIM15_OR1 841
TIM15_OR2 841
TIM15_PSC 836
TIM15_RCR 837
TIM15_SMCR 825
TIM15_SR 827
TIM16_OR1 860
TIM16_OR2 861
TIM2_OR1 782
TIM2_OR2 782
TIMx_ARR 699, 778, 856, 876
TIMx_BDTR 702, 858
TIMx_CCER 695, 776, 853
TIMx_CCMR1 . . . . . 689, 770, 851
TIMx_CCMR2 . . . . . 693, 774
TIMx_CCMR3 707
TIMx_CCR1 . . . . . 700, 779, 857
TIMx_CCR2 . . . . . 700, 779
TIMx_CCR3 . . . . . 701, 780
TIMx_CCR4 . . . . . 701, 780
TIMx_CCR5 708
TIMx_CCR6 709
TIMx_CNT 699, 777, 855, 875

TIMx_CR1 . . . . . 678, 761, 846, 872
TIMx_CR2 . . . . . 679, 762, 847, 874
TIMx_DCR 705, 781, 860
TIMx_DIER 684, 767, 848, 874
TIMx_DMAR 706, 781, 860
TIMx_EGR 688, 769, 850, 875
TIMx_PSC 699, 778, 856, 876
TIMx_RCR 700, 857
TIMx_SMCR 682, 764
TIMx_SR 686, 768, 849, 875
TSC_CR 568
TSC_ICR 571
TSC_IER 570
TSC_IOASCR 573
TSC_IOCCR 574
TSC_IOGCSR 574
TSC_IOGxCR 575
TSC_IOHCR 572
TSC_IOSCR 573
TSC_ISR 572

U

USART_BRR 1088
USART_CR1 1077
USART_CR2 1080
USART_CR3 1084
USART_GTPR 1088
USART_ICR 1096
USART_ISR 1091
USART_RDR 1098
USART_RQR 1090
USART_RTOR 1089
USART_TDR 1098
USB_ADDRn_RX 1380
USB_ADDRn_TX 1379
USB_BCDR 1373
USB_BTABLE 1372
USB_CNTR 1366
USB_COUNTn_RX 1380
USB_COUNTn_TX 1379
USB_DADDR 1372
USB_EPnR 1375
USB_FNR 1371
USB_ISTR 1368
USB_LPMCSR 1373

W

WWDG_CFR 916
WWDG_CR 915
WWDG_SR 916

45 Revision history

Table 249. Document revision history

Date	Revision	Changes
06-Apr-2016	1	Initial release.
30-Jun-2016	2	Added support for STM32L431xx. FW: Updated LENG bitfield in *Section 4.4.6: Volatile data segment length (FW_VDSL)*. PWR: Updated *Section : Entering Stop 2 mode*. RCC: Updated *Section 6.2.11: Clock security system on LSE*. GPIO: Updated reset values in *Section 8.4.4: GPIO port pull-up/pull-down register (GPIOx_PUPDR) (x = A..E and H)*. DMA: Updated *Table 40: Programmable data width & endian behavior (when bits PINC = MINC = 1)*. Updated *Section 11.5.2: DMA interrupt flag clear register (DMA_IFCR)*. Updated NDT bit description in *Section 11.5.4: DMA channel x number of data register (DMA_CNDTRx) (x = 1..7, where x = channel number)*. CRC: Added *Section 14.3.2: CRC internal signals*. Updated *Section 14.4.2: Independent data register (CRC_IDR)*. ADC: Updated *Section 16.4.8: Calibration (ADCAL, ADCALDIF, ADCx_CALFACT)*. Updated *Section 16.4.9: ADC on-off control (ADEN, ADDIS, ADRDY)*. TIM1: Updated *Section 25.3.28: DMA burst mode*. Updated *Section 25.3.29: Debug mode*. Updated *Table 112: Output control bits for complementary OCx and OCxN channels with break feature*. Updated *Section 25.4.20: TIM1 DMA address for full transfer (TIMx_DMAR)*. Updated *Section 25.4.25: TIM1 option register 2 (TIM1_OR2)*. TIM2: Updated *Section 26.3.20: DMA burst mode*. Updated *Section 26.4.20: TIM2 option register 2 (TIM2_OR2)*.

Table 249. Document revision history (continued)

Date	Revision	Changes
30-Jun-2016	2 (continued)	TIM15/TIM16: Updated *Section 27.4.21: Debug mode*. Updated *Table 118: TIMx Internal trigger connection*. Updated *Table 121: Output control bits for complementary OCx and OCxN channels with break feature (TIM16/17)*. RTC2: Updated *Section 33.3.15: Calibration clock output*. Added Caution at the end of *Section 33.6.3: RTC control register (RTC_CR)*. I2C: Updated Notes at the end of *Section 34.4.8: I2C master mode*. Updated START bit description in *Section 34.7.2: Control register 2 (I2C_CR2)*. USART: Updated *Section 35.5.17: Wakeup from Stop mode using USART*. Added UCESM bit in *Section 35.8.3: Control register 3 (USART_CR3)*. Updated *Section 36.4.11: Wakeup from Stop mode using LPUART*. Added UCESM bit in *Section 36.7.3: Control register 3 (LPUART_CR3)*.

IMPORTANT NOTICE – PLEASE READ CAREFULLY

STMicroelectronics NV and its subsidiaries (“ST”) reserve the right to make changes, corrections, enhancements, modifications, and improvements to ST products and/or to this document at any time without notice. Purchasers should obtain the latest relevant information on ST products before placing orders. ST products are sold pursuant to ST’s terms and conditions of sale in place at the time of order acknowledgement.

Purchasers are solely responsible for the choice, selection, and use of ST products and ST assumes no liability for application assistance or the design of Purchasers’ products.

No license, express or implied, to any intellectual property right is granted by ST herein.

Resale of ST products with provisions different from the information set forth herein shall void any warranty granted by ST for such product.

ST and the ST logo are trademarks of ST. All other product or service names are the property of their respective owners.

Information in this document supersedes and replaces information previously supplied in any prior versions of this document.

© 2016 STMicroelectronics – All rights reserved